H25 | ABSOLUTE ENCODER

Introduction

Long considered the industry standard for shafted incremental encoders, the Model H25 is now available in an absolute version with up to 13 Bits of resolution. It incorporates many of the great standard features of the incremental version, including: EMI shielding, 40-lb ABEC 7 bearings, matched thermal coefficients on critical components, and custom optics. This encoder features a 12 or 13 Bit absolute parallel gray code output, a selection line for count direction, and an output latch as standard. Output is standard gray code with options for natural binary or SSI compatible signals. Signals can be provided in either a single-ended multi-voltage line driver (TTL compatible when provided with 5 volts) or as an open-collector style of output. Typical applications include dam gate control, cranes, telescopes, tool changers, and robotics.

SPECIFICATIONS

Mechanical

Shaft Diameter	3/8" (1/2"as special feature)
Flat On Shaft	3/8" Shaft: 0.80 long X 0.03" deep; 1/2" Shaft: 0.80 long X 0.04" deep (1/2'' shaft w/flat must be ordered as a special feature)
Shaft Loading	3/8" shaft: Up to 40 pounds axial and 35 pounds radial; 1/2" shaft: Up to 90 pounds axial and 80 pounds radial
Shaft Runout	0.0005 T.I.R. at midpoint regardless of shaft diameter
Starting Torque at 25°C	Without shaft seal 1.0 in-oz (max); With shaft seal 2.5 in-oz (max); 1/2" shaft with shaft seal:3.5 in-oz (max)
Bearings	Class ABEC 7 standard, ABEC 5 for 1/2" shaft
Shaft Material	416 stainless steel
Bearing Housing	Die cast aluminum with protective finish; stainless steel (special feature)
Cover	Die cast aluminum; stainless steel (special feature)
Bearing Life	2 X 10^8 revs (1300 hrs at 2500 RPM) at rated load 1 X 10^{10} revs (67,000 hrs at 2500 RPM) at 10% of rated load
Maximum RPM	12,000 RPM nominal, 8000 RPM with 1/2" shaft (see Frequency Response, below) 30,000 RPM available on units with 3/8" shaft—consult with factory
Moment of Inertia	4.1 X 10^{-4} oz-in-sec2; 5.2 X 10^{-4} oz-in-sec^2 with 1/2" shaft
Weight	13 oz typical, 14.5 oz typical with 1/2" shaft

Copyright © 2018 Sensata Technologies, Inc.

Electrical

Code	12 or 13 bits NB or GC; excess gray and BCD available
Counts Per Shaft Turn	4096 or 8192
Count Transition Accuracy	± 1/2 bit maximum
Supply Voltage	5–28 VDC
Current Requirements	120 mA typical
Output Formats	**Parallel:** Gray Code, Natural Binary and Binary Coded Decimal; **Serial:** Serial Synchronous Interface (SSI) compatible; Analog: 4–20 mA, 0–10V
Voltage/Output	(see note 3) **28V/V:** Line Driver, 5–28 VDC in, Vout = Vin **28V/5:** Line Driver, 5–28 VDC in, Vout = 5 VDC **28V/OC:** Open Collector, 5–28 VDC in OCout **SSI**: 5–28 VDC In/5Vout
Protection Level	Reverse, overvoltage and output short circuit protection
Frequency Response	100kHz (1200 RPM for 12-bits, 600 RPM for 13-bits)
Output Termination Pinouts	see Table 1, page 7

Environmental

Enclosure Rating	NEMA 4 & 13 (IP 66) when ordered with shaft seal (on units with an MS connector) or a cable gland (on units with cable termination).
Temperature	Operating, 0º to 70º C; extended temperature testing available (see note 5); Storage, -25º to 90º C unless extended temperature option called out.
Shock	50 g's for 11 msec duration
Vibration	5 to 2000 Hz @ 20 g's
Humidity	98% RH without condensation

Environmental

MS3112E14-19P, 19–pin connector on encoder body, mates to MS3116J14-19S (or equivalent)

Notes & Tables: All notes and tables referred to in the text can be found on page 6 and 7.

Copyright © 2018 Sensata Technologies, Inc.

SERIAL SYNCHRONOUS INTERFACE (SSI)

SSI output provides effective synchronization in a closed-loop control system. A clock pulse train from a controller is used to clock out sensor data: one bit of position data is transmitted to the controller per one clock pulse received by the sensor. The use of a differential driver permits reliable transmission of data over long distances in environments that may be electrically noisy. The encoder utilizes a clock signal, provided by the user interface, to time the data transmission. Receiving electronics must include an appropriate receiver as well as line terminating resistors.

Data Transmission Sequence

1. Output driver of the encoder is a MAX 491 transceiver in transmit mode. The recommended receiver is a MAX 491 transceiver in receive mode.
2. Controller provides a series of pulses (or differential pulse pairs) on the CLOCK input lines.
3. On the first HIGH-to-LOW CLOCK transition, the encoder latches its data at the current position and prepares to transmit.
4. Controller reads data on the falling edge of the next 15 clock cycles.
5. The first bit is a START bit and is always HIGH.
6. Next comes 13 data bits beginning with the most significant bit (MSB) and ending with the parity bit. On 12 bit encoders, bit 13 is LOW. When parity is not ordered, parity is LOW.
7. After the last CLOCK HIGH-to-LOW transition, a minimum of 40 microseconds must pass before the beginning of the next CLOCK series.

Interfacing Long Data Lines

Ordering SSI: HOW TO SPECIFY SSI OUTPUT IN THE ENCODER
MODEL NUMBER: Use the designation, S3 between the **Code Format** designation and the **Connector** designation.
Example: H25D-SS-12GC-S3-CW-SM18

Cable impedance can create a transmission delay, in effect, shifting the phase relationship between the clock pulse and the data. If this phase shift exceeds 180°, then the wrong bit position will be sampled by the receiver. As a result, the maximum allowable clock frequency is a function of the cable length. For 24 AWG, stranded, 3 pair cable (BEI part number 37048- 003 or equivalent) the group delay is 1.36ns/ft. The table below shows the maximum transmission rate allowable as a function of cable length to ensure a phase shift of less than 90°.

CLOCK, Maximum (kHz) = 92,000 / Cable Length (ft)CW

Cable Length (ft)	50	100	200	300	500	1000
Max Frequency (kHZ)	1800	900	500	300	200	100

SSI Timing

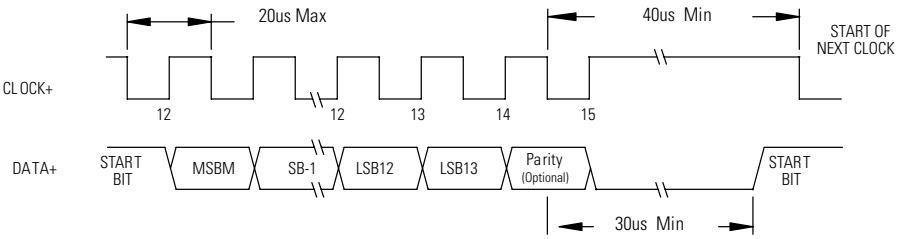

Features

- Synchronous transmission
- Transmission lengths to 1000 feet
- Accepts clock rates from 100 KHz to 1.8 MHz

Output Code and Terminations				
	Parallel Code		**Termination Type**	
	Gray Code	Natural Binary	Cable	M14/19 Conn.
	12 Bit	12 Bit		
MSB	G_{11}	2_{11}	WHT/BLK	A
	G_{10}	2_{10}	WHT/BRN	B
	G_9	2_9	WHT/RED	C
	G_8	2_8	WHT/ORN	D
	G_7	2_7	WHT/YEL	E
	G_6	2_6	WHT/GRN	F
	G_5	2_5	WHT/BLU	G
	G_4	2_4	WHT/VIO	H
	G_3	2_3	WHT/GRY	J
	G_2	2_2	WHT	K
	G_1	2_1	GRY/BLK	L
LSB_{12}	G_0	2_0	GRY/BRN	M
LSB_{13}			GRY/RED	N
	0V (Circuit Common)1		GRY/ORN	P
	Direction of Count		ORN	R
	Case Ground		GRN	S
	0V (Circuit Common)		BLK	T
	Latch Control		YEL	U
	+V (Supply Voltage)		RED	V
	Shield Drain		BARE	—

[1]Pin P is available for a tri-state option

Copyright © 2018 Sensata Technologies, Inc.

SSI Output Termination Table			
	M18 Connection	**M14/19 Connection**	**Cable Connection**
DATA+	A	A	YEL
DATA-	H	B	WHT/YEL
CLOCK+	B	C	BLU
CLOCK-	I	D	WHT/BLU
DIR CONTROL	C	R	ORN
CASE GROUND	G	S	GRN
CIRCUIT COMMON	F	T	BLK
+V SUPPLY VOLTAGE	D	V	RED
SHIELD DRAIN	—	—	BARE

Direction of Count: Standard is CW increasing when viewed from the shaft end. Pin R is normally HI (or N/C) and is pulled up internally to +V. To reverse the count direction, Pin R must be pulled LO (COMMON).

Latch control: Encoder outputs are active and provide continuous parallel position information when Pin U is HI (or N/C). Pin U is pulled up internally to +V. When Pin U is LO (COMMON) the encoder outputs are latched at the logic state that is present when the latch is applied and will stay latched until Pin U is no longer grounded.

M18 Connector is a MS3102R18-1P, 10-pin connector on the encoder body and mates to an MS3106F18-1S connector or can be used with a standard cable/connector assembly, BEI P/N 924-31186-18XX (Where XX = 10, 20 30 or 50 for a 10, 20, 30, or 50 foot length). This is the preferred connector for SSI output.

M14/19 Connector is a MS3112E14-19P, 19-pin connector on the encoder body and mates to an MS3116J14-19S or equivalent.

Copyright © 2018 Sensata Technologies, Inc.

DIMENSIONS

Dimensions in mm

H25D - Square Flange

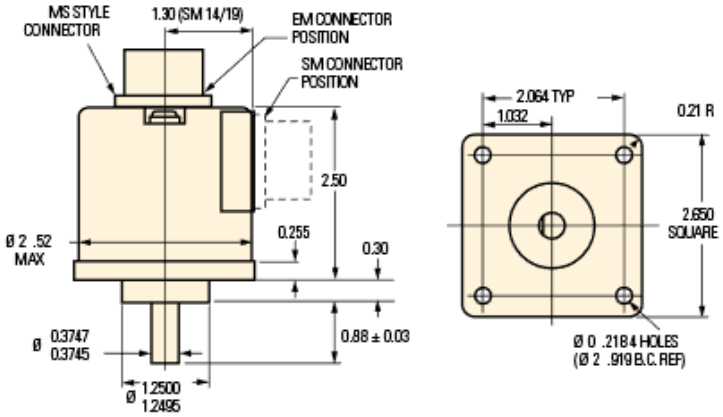

H25E - 2.50 Servo Mount

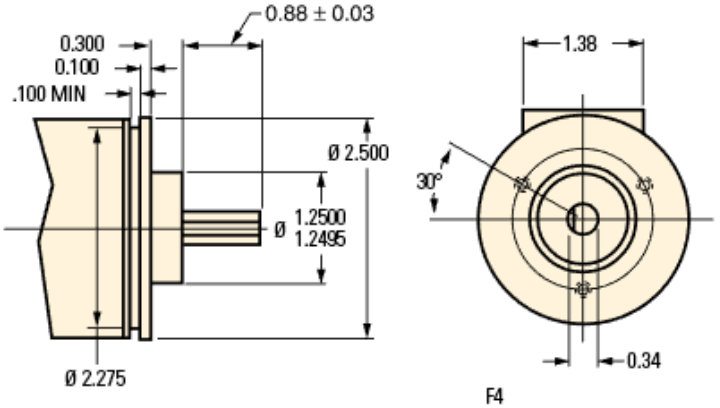

F4
6-32 UNC-2B
0.250 Min. Deep
3 places equally spaced
on a Ø 2.00 bolt circle.

H25G - 2.62 Dia Servo Mount

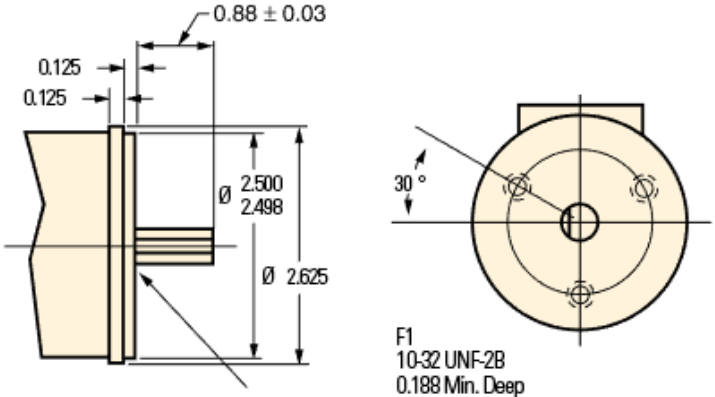

NOTE : SHAFT SEAL NOT AVAILABLE ON H25 G

F1
10-32 UNF-2B
0.188 Min. Deep
3 places equally spaced
on a Ø 1.875 bolt circle.

Copyright © 2018 Sensata Technologies, Inc.

NOTES

1. Mounting is usually done either using the D-style square flange mount, E- or G-style servo mounts, or one of the standard face mounts, F1 for example. Consult factory for additional face mount options.

2. The shaft seal is recommended in virtually all installations. The most common exceptions are applications requiring a very low starting torque or those requiring operation at both high temperature and high speed.

3. Output IC's: Output IC's are available as either Line Driver (LD) or NPN Open Collector (OC) types. Open Collectors require pull-up resistors, resulting in higher output source impedance (sink impedance is similar to that of line drivers). In general, use of a Line Driver style output is recommended. Line Drivers source or sink current and their lower impedance mean better noise immunity and faster switching times. **Warning:** Do not connect any line driver outputs directly to circuit common/OV, which may damage the driver. Unused outputs should be isolated and left floating. Our applications specialists would be pleased to discuss your system requirements and the compatibility of your receiving electronics with Line Driver type outputs.

28V/V: Multi-voltage Line Driver (7272*): 100 mA source/sink. Input voltage 5 to 28 VDC +/- 5% standard (Note: Vout = Vin). This driver is TTL compatible when used with 5 volt supply. Supply lines are protected against overvoltage to 60 volts and reverse voltage. Outputs are short circuit protected for one minute. Supply current is 120 mA typical (plus load current). This is the recommended replacement for 3904R and 7406R open collector outputs with internal pullup resistors. It is also a direct replacement for any 4469, 88C30, 8830 or 26LS31 line driver

28V/5: Multi-voltage Line Driver (7272*): 100 mA source/sink. Input voltage 5 to 28 VDC +/- 5% standard, internally regulated with 5V (TTL compatible) logic out. Supply lines are protected against overvoltage to 60 volts and reverse voltage. Outputs are short circuit protected for one minute. Supply current is 90 mA typical (plus load current). **Note:** Limit encoder load to 2.5W max at ambient. Example at 12 VDC: 2.5W/ (+12VDC minus +5VDC) = 357 mA total allowed current. Consult factory for your specific requirements.

28V/OC: NPN Open Collector (3904*, 7273*). Current sink of 80 mA max. Current sourced by external pull- up resistor. Output can be pulled up to voltage other than supply voltage (30 V max). Input voltage 5 to 28 VDC +/- 5% standard. Supply current is 120 mA typical. This replaces prior IC's with designations of 3904, 7406, 3302, 681 and 689.

4. Special –S at the end of the model number is used to define a variety of nonstandard features such as special shaft lengths, voltage options, or special testing. Please consult the factory to discuss your special requirements.

5. Extended temperature ratings are available in the following ranges: -40 to 70°C, -40 to 85°C. Some models can operate down to - 55°C. Extended temperature ranges can affect other performance factors. Consult with factory for more specific information.

** Products manufactured prior to April 2007 used the line driver IC number instead of voltage output in model number.*

FIGURES

Figure 1: Gray Code

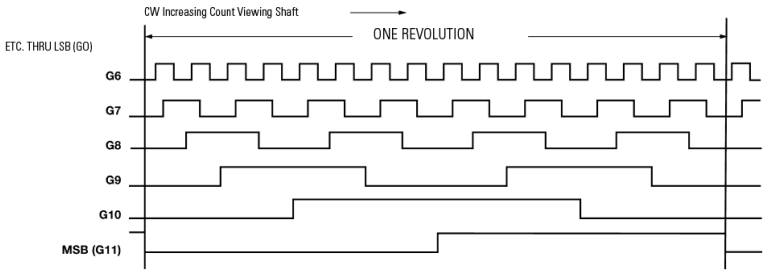

Figure 2: Natural Binary

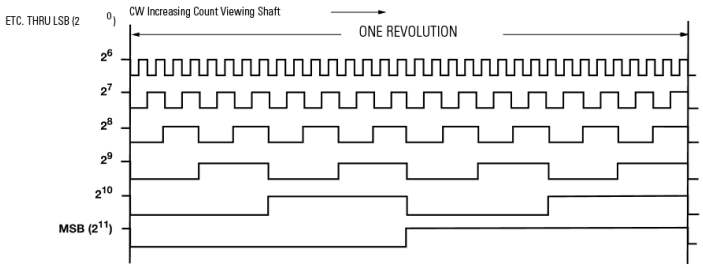

Copyright © 2018 Sensata Technologies, Inc.

Table 1: Incremental Output Terminations

The connector style will determine pinouts. For example, an encoder with ABC channels and an M18 connector uses the table to the right.

M14 Connector	M16 Connector	Channels Designated in Model Number	
Pin	**Pin**	**ABZ**	**ABC**
E	A	A	A
D	B	B	B
C	C	Z	$\overline{A}$
B	D	+V (Supply Voltage)	
F	E	—	$\overline{B}$
A	F	0V (Circuit Common)	
	G	Case Ground (CG) (except H2O)	

Wire Color (22AWG)	DA 15P Connector	Channels Designated in Model Number		
		ABZ	**ABC**	**ABZC**
YEL	13	A	A	A
BLUE	14	B	B	B
ORN	15	Z	—	Z
W-Yel	10	—	$\overline{A}$	$\overline{A}$
W-Blu	11	—	$\overline{B}$	$\overline{B}$
W-Orn	12	—	—	$\overline{Z}$
RED	6	+V (Supply Voltage)		
BLK	1	0V (Circuit Common)		
GRN	9	Case Ground (CG0) (except H2O)		
WHITE		Shield Drain (Shielded Cable Only)		

M14 Connector	
Pin	**Channel**
A	A
B	B
C	Z
D	+V
E	—
F	0V
G	CG
H	$\overline{A}$
I	$\overline{B}$
J	$\overline{Z}$

M12 Connector	
Pin	**Channel**
A	A
B	B
C	Z
D	+V
E	—
F	0V
G	CG
H	$\overline{A}$
J	$\overline{B}$
K	$\overline{Z}$

Table 2: Disc Resolutions for Incremental Encoder Models H25, H38, H40, L25, E25

Resolutions highlighted with are available H25 EXPRESS ENCODERS® that ship in one to three days.

1, 2, 5, 6, 7, 8, 10, 13, 16, 20, 24, 25, 26, 30, 32, 33, 34, 36, 37, 40, 45, 48, 50, 51, 56*, 60, 64, 66, 72, 75, 80, 86, 88, 90, 100, 102, 120, 122, 125, 127, 128, 132, 144, 148, 150, 158, 160, 175, 176, 180, 187, 192, 200, 202, 204*, 217, 220, 240, 250, 254, 255, 256, 264*, 274, 280, 283, 288, 292, 300, 312, 320, 321, 325, 360, 366, 372, 375, 377, 380, 381, 384, 385, 393, 400, 430, 432, 450, 462, 480, 490, 500, 502, 508, 512, 522, 530, 550, 560*, 576, 598, 600, 604, 625, 635, 638, 640, 660, 672, 676, 680, 687, 690, 700, 720, 725, 735, 740, 744, 748, 750, 762, 768, 780, 785, 800, 812, 825, 850, 864, 878, 888, 900, 912, 914, 938, 942, 955, 960, 1000, 1016, 1024, 1030, 1035, 1036, 1040, 1054, 1056, 1074, 1076, 1080, 1088, 1100, 1101, 1125, 1136, 1200, 1237, 1250, 1257, 1270, 1280, 1300, 1314, 1332, 1333, 1390, 1400, 1414, 1427, 1440, 1484, 1500, 1562, 1570, 1596, 1600, 1650, 1666, 1718, 1745, 1774, 1800, 1840*, 1850, 1855, 1875, 1894, 1920, 1952, 1968, 1979,1995, 2000, 2048, 2080, 2094, 2100, 2160, 2164, 2199, 2200, 2250, 2356, 2400, 2485, 2500, 2514, 2519, 2540, 2821, 2827, 2833, 3000, 3125, 3600, 4000, 4096, 5000

**AB or ABC output only. NOTE: Resolutions up to 72,000 are available.*

Copyright © 2018 Sensata Technologies, Inc.

ORDERING OPTIONS

Example : H25E-F4-SS-12GC-28V/V-CW-SM14/19

Contact the factory for special versions, ex: special flanges, electronics, connections…

H25 E - F4 - SS - 12 GC - 28V/V - CW - S M14/19 -

Express Encoder

X = Express Encoder

Type

Heavy Duty
2.5 inch Diameter

Housing

D = Square Flange
E = 2.5 inch diameter servo mount
G = 2.62 inch diameter servo mount
See dimensions

Face Mounts

F1
F4
See note 4

Shaft Seal Configuration

SS = Shaft Seal
See note 2

Number of Bits

12 = 12-Bits, 4096 counts per turn
13 = 13 Bits, 8192 counts per turn
(Excess gray codes and BCD available - consult factory)

Code Type

GC = Gray Code
NB = Natural Binary
BCD = Binary Coded Decimal
X = Excess gray code

Voltage/Output

28V/V = 5-28 Vin/out
28V/5 = 5-28 Vin/5Vout
28V/OC = 5-28 Vin/OCout
A1 = 4-20mA
A2 = 0-10V
S1 = RS-422 Serial Asynchronous
S3 = Serial Synchronous Interface
See note 3

Direction of Count

CW = Clockwise increasing count
CCW = Counter clockwise increasing count

Output Termination Location

E = End
S = Side

Termination Type

M14/19 = 19 pin connector
CS = Cable with gland seal
Cable length specified in inches
(i.e. C18 = Pigtail 18" long)
M18 = MS3102R18-1P (S3 output only)

Special Features

S = Special features specified on purchase order (consult factory)
See note 4

EXPRESS ENCODERS: Items highlighted with ▇ are standard Express Encoders and ship in one to three days.

Copyright © 2018 Sensata Technologies, Inc.

AGENCY APPROVALS & CERTIFICATIONS

CE EN 55011 and EN 61000-6-2

Sensata Technologies, Inc. ("Sensata") data sheets are solely intended to assist designers ("Buyers") who are developing systems that incorporate Sensata products (also referred to herein as "components"). Buyer understands and agrees that Buyer remains responsible for using its independent analysis, evaluation and judgment in designing Buyer's systems and products. Sensata data sheets have been created using standard laboratory conditions and engineering practices. Sensata has not conducted any testing other than that specifically described in the published documentation for a particular data sheet. Sensata may make corrections, enhancements, improvements and other changes to its data sheets or components without notice.
Buyers are authorized to use Sensata data sheets with the Sensata component(s) identified in each particular data sheet. HOWEVER, NO OTHER LICENSE, EXPRESS OR IMPLIED, BY ESTOPPEL OR OTHERWISE TO ANY OTHER SENSATA INTELLECTUAL PROPERTY RIGHT, AND NO LICENSE TO ANY THIRD PARTY TECHNOLOGY OR INTELLECTUAL PROPERTY RIGHT, IS GRANTED HEREIN. SENSATA DATA SHEETS ARE PROVIDED "AS IS". SENSATA MAKES NO WARRANTIES OR REPRESENTATIONS WITH REGARD TO THE DATA SHEETS OR USE OF THE DATA SHEETS, EXPRESS, IMPLIED OR STATUTORY, INCLUDING ACCURACY OR COMPLETENESS. SENSATA DISCLAIMS ANY WARRANTY OF TITLE AND ANY IMPLIED WARRANTIES OF MERCHANTABILITY, FITNESS FOR A PARTICULAR PURPOSE, QUIET ENJOYMENT, QUIET POSSESSION, AND NON-INFRINGEMENT OF ANY THIRD PARTY INTELLECTUAL PROPERTY RIGHTS WITH REGARD TO SENSATA DATA SHEETS OR USE THEREOF.
All products are sold subject to Sensata's terms and conditions of sale supplied at www.sensata.com SENSATA ASSUMES NO LIABILITY FOR APPLICATIONS ASSISTANCE OR THE DESIGN OF BUYERS' PRODUCTS. BUYER ACKNOWLEDGES AND AGREES THAT IT IS SOLELY RESPONSIBLE FOR COMPLIANCE WITH ALL LEGAL, REGULATORY AND SAFETY-RELATED REQUIREMENTS CONCERNING ITS PRODUCTS, AND ANY USE OF SENSATA COMPONENTS IN ITS APPLICATIONS, NOTWITHSTANDING ANY APPLICATIONS-RELATED INFORMATION OR SUPPORT THAT MAY BE PROVIDED BY SENSATA.
Mailing Address: Sensata Technologies, Inc., 529 Pleasant Street, Attleboro, MA 02703, USA.

CONTACT US

Americas
+1 (800) 350 2727 – Option 1
sales.beisensors@sensata.com
Europe, Middle East & Africa
+33 (3) 88 20 8080
position-info.eu@sensata.com
Asia Pacific
sales.isasia@list.sensata.com
China +86 (21) 2306 1500
Japan +81 (45) 277 7117
Korea +82 (31) 601 2004
India +91 (80) 67920890
Rest of Asia +886 (2) 27602006 ext 2808

Copyright © 2018 Sensata Technologies, Inc.

02067-001 Rev: 05/25/18

Мы молодая и активно развивающаяся компания в области поставок электронных компонентов. Мы поставляем электронные компоненты отечественного и импортного производства напрямую от производителей и с крупнейших складов мира.

Благодаря сотрудничеству с мировыми поставщиками мы осуществляем комплексные и плановые поставки широчайшего спектра электронных компонентов.

Собственная эффективная логистика и склад в обеспечивает надежную поставку продукции в точно указанные сроки по всей России.

Мы осуществляем техническую поддержку нашим клиентам и предпродажную проверку качества продукции. На все поставляемые продукты мы предоставляем гарантию .

Осуществляем поставки продукции под контролем ВП МО РФ на предприятия военно-промышленного комплекса России , а также работаем в рамках 275 ФЗ с открытием отдельных счетов в уполномоченном банке. Система менеджмента качества компании соответствует требованиям ГОСТ ISO 9001.

Минимальные сроки поставки, гибкие цены, неограниченный ассортимент и индивидуальный подход к клиентам являются основой для выстраивания долгосрочного и эффективного сотрудничества с предприятиями радиоэлектронной промышленности, предприятиями ВПК и научно-исследовательскими институтами России.

С нами вы становитесь еще успешнее!

Наши контакты:

Телефон: +7 812 627 14 35

Электронная почта: sales@st-electron.ru

Адрес: 198099, Санкт-Петербург, Промышленная ул, дом № 19, литера Н, помещение 100-Н Офис 331