Knobs, Molded Phenolic

PH SERIES

PH15181/4

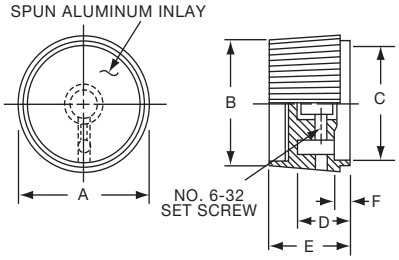

Straight Knurl Less Indicator Line

Tyco Electronics	Alcoswitch	A	B	C	D	E	F
1437624-2	PH15181/4	.996(25.3)	.972(24.7)	.799(20.3)	.472(12.0)	.669(17.0)	.157(3.99)

PK SERIES

PK50B1/8

PK701/4

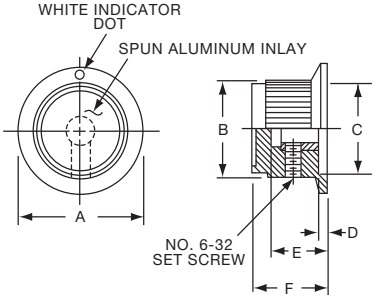

Straight Knurl with Dot Indicator on Skirt

Tyco Electronics	Alcoswitch	A	B	C	D	E	F
1437624-7	PK50B1/8	.748(19.0)	.570(14.5)	.500(12.70)	.055(1.40)	.460(11.7)	.550(13.97)
1437624-6	PK50B1/4	.748(19.0)	.570(14.5)	.500(12.70)	.055(1.40)	.460(11.7)	.550(13.97)
1437624-8	PK70B1/4	.984(25.0)	.728(18.5)	.710(18.03)	.079(2.01)	.500(12.7)	.590(14.99)
1437624-9	PK90B1/4	1.25(31.8)	.985(25.0)	.870(22.01)	.098(2.49)	.470(11.9)	.595(15.10)

PK SERIES

PK1100B1/4

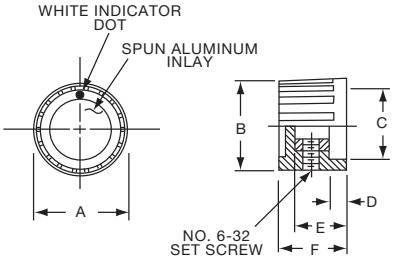

Serrated with Dot Indicator on Top

Tyco Electronics	Alcoswitch	A	B	C	D	E	F
1437624-4	PK1100B1/8	.700(17.8)	.643(16.3)	.565(14.35)	.125(3.18)	.453(11.51)	.530(13.5)

Catalog 1308390
Issued 9-04
www.tycoelectronics.com

Dimensions are in inches and millimeters unless otherwise specified. Values in parentheses or brackets are metric equivalents.

Dimensions are shown for reference purposes only. Specifications subject to change.

USA: 1-800-522-6752
Canada: 1-905-470-4425
Mexico: 01-800-733-8926
C. America: 52-55-5-729-0425
South America: 55-11-3611-1514
Hong Kong: 852-2735-1628
Japan: 81-44-844-8013
UK: 44-141-810-8967

Knobs, Molded Phenolic

PKA SERIES

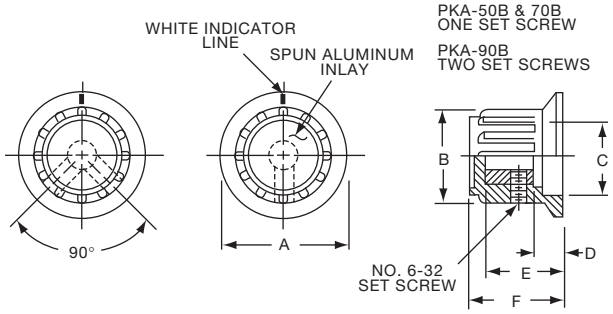

PKA50B1/4

PKA90B1/4

Ribbed with Line Indicator on Skirt

Tyco Electronics	Alcoswitch	A	B	C	D	E	F
1-1437624-1	PKA50B1/8	.795(20.2)	.580(14.7)	.540(13.7)	.080(2.03)	.450(11.4)	.590(15.0)
1-1437624-0	PKA50B1/4	.795(20.2)	.580(14.7)	.540(13.7)	.080(2.03)	.450(11.4)	.590(15.0)
1-1437624-4	PKA55B1/8	.780(19.8)	.580(14.7)	.475(12.1)	.135(3.43)	.585(14.9)	.675(17.2)
1-1437624-3	PKA55B1/4	.780(19.8)	.580(14.7)	.475(12.1)	.135(3.43)	.585(14.9)	.675(17.2)
1-1437624-5	PKA70B1/4	.980(24.9)	.740(18.8)	.680(17.3)	.118(3.00)	.650(16.5)	.750(19.1)
1-1437624-7	PKA90B1/4	1.375(34.9)	.970(24.6)	.670(17.0)	.195(4.95)	.750(19.1)	.840(21.3)

PKAP SERIES

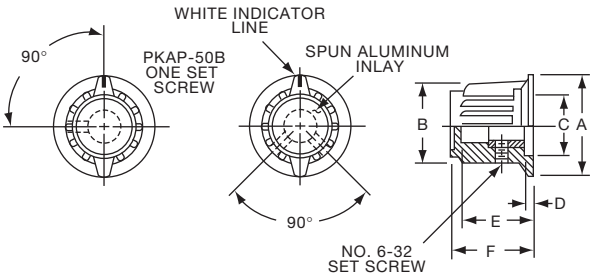

PKAP50B1/8

PKAP90B1/4

Ribbed with Skirt and Pointer with Indicator Line

Tyco Electronics	Alcoswitch	A	B	C	D	E	F
1-1437624-8	PKAP50B1/4	.787(20.0)	.693(17.6)	.508(12.9)	.082(2.08)	.579(14.7)	.689(17.5)
1-1437624-9	PKAP50B1/8	.787(20.0)	.693(17.6)	.508(12.9)	.082(2.08)	.579(14.7)	.689(17.5)
2-1437624-0	PKAP70B1/4	.976(24.8)	.874(22.1)	.668(17.0)	.158(4.01)	.634(16.1)	.737(18.72)

Catalog 1308390
Issued 9-04
www.tycoelectronics.com

Dimensions are in inches and millimeters unless otherwise specified. Values in parentheses or brackets are metric equivalents.

Dimensions are shown for reference purposes only. Specifications subject to change.

USA: 1-800-522-6752
Canada: 1-905-470-4425
Mexico: 01-800-733-8926
C. America: 52-55-5-729-0425
South America: 55-11-3611-1514
Hong Kong: 852-2735-1628
Japan: 81-44-844-8013
UK: 44-141-810-8967

Knobs, Molded Phenolic

PKB SERIES

PKB90B1/4

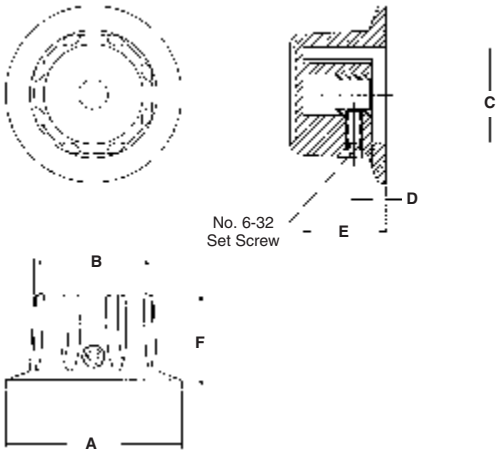

Fluted with Indicator Line On Skirt

Tyco Electronics	Alcoswitch	A	B	C	D	E	F
2-1437624-3	PKB70B1/4	1.12(28.3)	.750(19.1)	.670(17.0)	.118(3.0)	.490(12.5)	.600(15.2)
2-1437624-4	PKB90B1/4	1.50(38.1)	1.02(25.8)	.800(20.3)	.118(3.0)	.705(17.9)	.820(20.8)

PKD SERIES

PKD60B1/4

PKD100B1/4

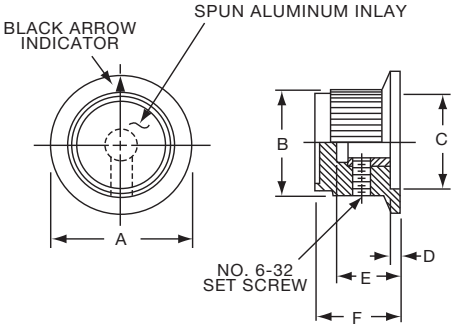

Straight Knurl Aluminum Skirt w/Arrow Indicator

Tyco Electronics	Alcoswitch	A	B	C	D	E	F
2-1437624-8	PKD60B1/8	.780(19.8)	.566(14.4)	.487(12.4)	.059(1.5)	.492(12.5)	.563(14.3)
2-1437624-7	PKD60B1/4	.780(19.8)	.566(14.4)	.487(12.4)	.059(1.5)	.492(12.5)	.563(14.3)
3-1437624-1	PKD70B1/4	1.02(25.9)	.750(19.1)	.700(17.8)	.080(2.0)	.490(12.5)	.610(15.5)
2-1437624-5	PKD100B1/4	1.29(32.8)	1.00(25.4)	.865(22.0)	.050(1.3)	.500(12.7)	.590(15.0)

PKD SERIES

PKD60B101/8

PKD100B101/4

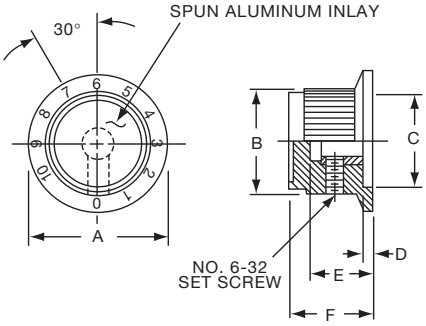

Straight Knurl Skirt w/0-10 Numerals

Tyco Electronics	Alcoswitch	A	B	C	D	E	F
3-1437624-0	PKD60B101/8	.780(19.8)	.566(14.4)	.487(12.4)	.059(1.5)	.492(12.5)	.563(14.3)
2-1437624-9	PKD60B101/4	.780(19.8)	.566(14.4)	.487(12.4)	.059(1.5)	.492(12.5)	.563(14.3)
3-1437624-2	PKD70B101/4	1.02(25.9)	.750(19.1)	.700(17.8)	.080(2.0)	.490(12.5)	.610(15.5)
2-1437624-6	PKD100B101/4	1.29(32.8)	1.00(25.4)	.865(22.0)	.050(1.3)	.500(12.7)	.590(15.0)

Catalog 1308390
Issued 9-04
www.tycoelectronics.com

Dimensions are in inches and millimeters unless otherwise specified. Values in parentheses or brackets are metric equivalents.

Dimensions are shown for reference purposes only. Specifications subject to change.

USA: 1-800-522-6752
Canada: 1-905-470-4425
Mexico: 01-800-733-8926
C. America: 52-55-5-729-0425
South America: 55-11-3611-1514
Hong Kong: 852-2735-1628
Japan: 81-44-844-8013
UK: 44-141-810-8967

Knobs, Molded Phenolic

PKDT SERIES

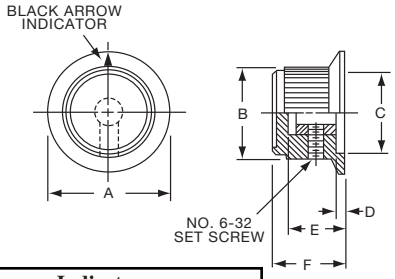

PKDT100B1/4

Black Spin Cap with "Diamond Cut" and Arrow Indicator

Tyco Electronics	Alcoswitch	A	B	C	D	E	F
3-1437624-9	PKDT70B1/4	1.03(26.0)	.738(18.8)	.720(18.3)	.098(2.49)	.500(12.7)	.635(16.1)
3-1437624-3	PKDT100B1/4	1.29(32.8)	1.02(25.9)	.860(21.8)	.042(1.07)	.500(12.7)	.638(16.2)

PKDT SERIES

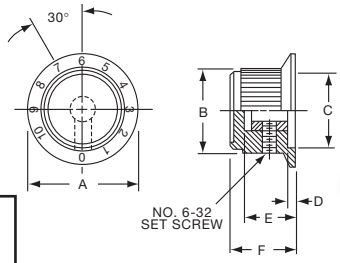

PKDT100B101/4

Black Spin Cap with "Diamond Cut" & 0-10 Numerals

Tyco Electronics	Alcoswitch	A	B	C	D	E	F
3-1437624-8	PKDT60B101/8	.778(19.8)	.605(15.4)	.560(12.5)	.060(1.53)	.392(9.96)	.562(14.3)
4-1437624-0	PKDT70B101/4	1.03(26.0)	.738(18.8)	.720(18.3)	.098(2.49)	.500(12.7)	.635(16.1)
3-1437624-4	PKDT100B101/4	1.29(32.8)	1.02(25.9)	.860(21.8)	.042(1.07)	.500(12.7)	.638(16.2)

PKE SERIES

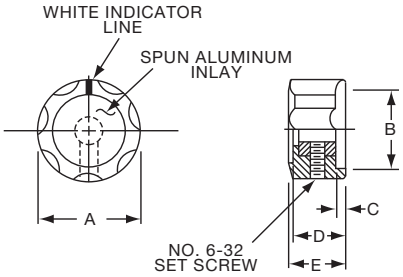

PKE60B1/8

PKE90B1/4

Fluted with Indicator Line

Tyco Electronics	Alcoswitch	A	B	C	D	E
4-1437624-4	PKE60B1/8	.626(15.9)	.472(12.0)	.091(2.31)	.394(10.0)	.472(12.0)
4-1437624-3	PKE60B1/4	.626(15.9)	.472(12.0)	.091(2.31)	.394(10.0)	.472(12.0)
4-1437624-5	PKE90B1/4	.890(22.6)	.724(18.4)	.098(2.49)	.480(12.2)	.512(13.0)

PKES SERIES

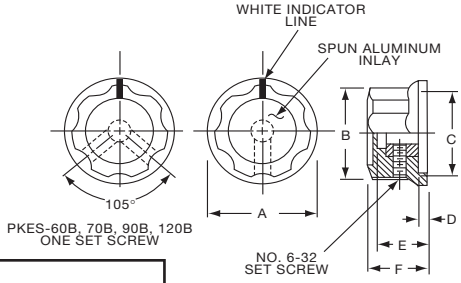

PKES60B1/4

PKES70B1/4

Fluted with Skirt and Indicator Line

Tyco Electronics	Alcoswitch	A	B	C	D	E	F
5-1437624-1	PKES60B1/8	.748(19.0)	618(15.7)	.460(11.7)	.090(2.29)	.370(9.40)	.470(11.9)
5-1437624-0	PKES60B1/4	.748(19.0)	.618(15.7)	.460(11.7)	.090(2.29)	.370(9.40)	.470(11.9)
5-1437624-2	PKES70B1/4	.855(21.7)	.744(18.9)	.705(17.9)	.080(2.03)	.421(10.7)	.526(13.4)
5-1437624-3	PKES90B1/4	1.01(25.7)	.889(22.6)	.846(21.5)	.079(2.01)	.421(10.7)	.570(14.5)
4-1437624-6	PKES120B1/4	1.30(32.9)	1.16(29.5)	1.02(25.9)	.118(3.00)	.500(12.7)	.628(16.0)
4-1437624-7	PKES140B1/4	1.50(38.1)	1.37(34.9)	1.22(30.9)	.118(3.00)	.540(13.7)	.693(17.6)
4-1437624-8	PKES150B1/4	1.77(44.9)	1.55(39.4)	1.41(35.9)	.118(3.00)	.733(18.6)	.831(21.1)

Catalog 1308390
Issued 9-04
www.tycoelectronics.com

Dimensions are in inches and millimeters unless otherwise specified. Values in parentheses or brackets are metric equivalents.

Dimensions are shown for reference purposes only. Specifications subject to change.

USA: 1-800-522-6752
Canada: 1-905-470-4425
Mexico: 01-800-733-8926
C. America: 52-55-5-729-0425
South America: 55-11-3611-1514
Hong Kong: 852-2735-1628
Japan: 81-44-844-8013
UK: 44-141-810-8967

Knobs, Molded Phenolic

PKF SERIES

PKF50B1/8

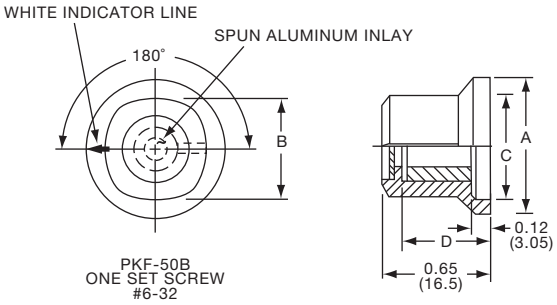

Plain Quadrate with Indicator Line & Arrow					
Tyco Electronics	Alcoswitch	A	B	C	D
5-1437624-5	PKF50B1/8	.670(17.0)	.454(11.53)	.570(14.48)	.520(13.2)

PKG SERIES

PKG40B1/8

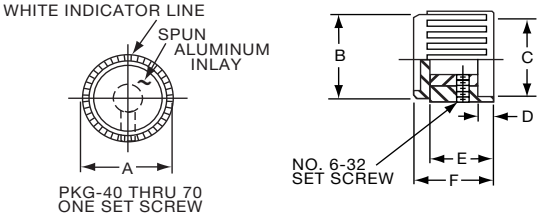

Ribbed with Indicator Line							
Tyco Electronics	Alcoswitch	A	B	C	D	E	F
5-1437624-9	*PKG40B1/8	.437(11.1)	.410(10.4)	.304(7.72)	.079(2.00)	.385(9.78)	.472(12.0)
6-1437624-1	PKG50B1/8	.551(14.0)	.500(12.7)	.442(10.7)	.056(1.42)	.395(10.03)	.512(13.0)
6-1437624-0	PKG50B1/4	.551(14.0)	.500(12.7)	.442(10.7)	.056(1.42)	.395(10.03)	.512(13.0)

*Note: Knob uses #4-40 set screw

Catalog 1308390
Issued 9-04
www.tycoelectronics.com

Dimensions are in inches and millimeters unless otherwise specified. Values in parentheses or brackets are metric equivalents.

Dimensions are shown for reference purposes only. Specifications subject to change.

USA: 1-800-522-6752
Canada: 1-905-470-4425
Mexico: 01-800-733-8926
C. America: 52-55-5-729-0425
South America: 55-11-3611-1514
Hong Kong: 852-2735-1628
Japan: 81-44-844-8013
UK: 44-141-810-8967

Knobs, Molded Phenolic

PKG SERIES

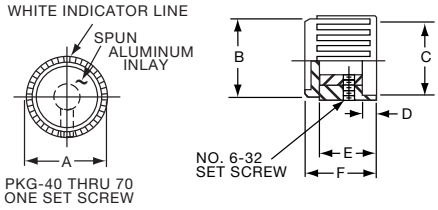

PKG70B1/8

Ribbed with Indicator Line							
Tyco Electronics	Alcoswitch	A	B	C	D	E	F
6-1437624-6	PKG60B1/8	.660(16.8)	.615(15.6)	.551(14.0)	.080(2.03)	.430(10.9)	.551(14.0)
6-1437624-5	PKG60B1/4	.660(16.8)	.615(15.6)	.551(14.0)	.080(2.03)	.430(10.9)	.551(14.0)
6-1437624-8	PKG70B1/8	.740(18.8)	.698(17.7)	.591(15.0)	.080(2.03)	.453(11.5)	.559(14.2)
6-1437624-7	PKG70B1/4	.740(18.8)	.698(17.7)	.591(15.0)	.080(2.03)	.453(11.5)	.559(14.2)

PKG SERIES

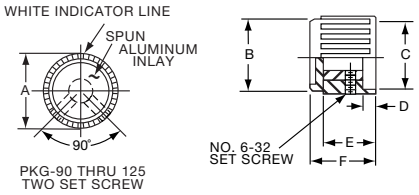

PKG90B1/4

Ribbed with Indicator Line							
Tyco Electronics	Alcoswitch	A	B	C	D	E	F
7-1437624-0	PKG90B1/8	.862(21.9)	.811(20.6)	.710(18.0)	.080(2.03)	.450(11.4)	.550(13.97)
6-1437624-9	PKG90B1/4	.862(21.9)	.811(20.6)	.710(18.0)	.080(2.03)	.450(11.4)	.550(13.97)
5-1437624-7	PKG100B1/4	1.055(26.80)	1.01(25.5)	.920(23.4)	.080(2.03)	.430(10.9)	.555(14.1)
5-1437624-8	PKG1255B1/4	1.248(31.70)	1.20(30.4)	.690(17.5)	.080(2.03)	.430(10.9)	.565(14.4)

PKGP SERIES

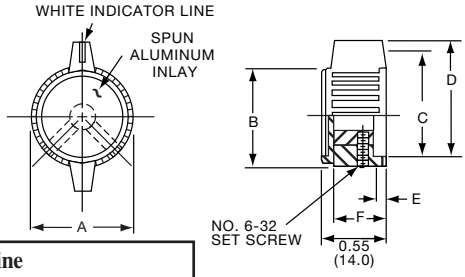

PKGP70B1/4

Ribbed with Bar Pointers and Indicator Line							
Tyco Electronics	Alcoswitch	A	B	C	D	E	F
7-1437624-2	PKGP70B1/4	.740(18.8)	.700(17.8)	.590(15.0)	.990(25.2)	.080(2.03)	.460(11.7)
7-1437624-3	PKGP90B1/4	.860(21.8)	.810(20.6)	.700(17.8)	1.28(32.5)	.080(2.03)	.460(11.7)
7-1437624-1	PKGP100B1/4	1.05(26.2)	1.00(25.4)	.900(22.9)	1.62(41.2)	.080(2.03)	.480(12.2)

PKJ SERIES

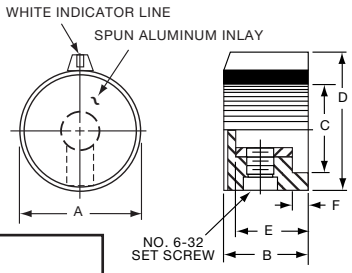

PKJ50B1/8

PKJ70B1/4

Straight Knurl with Bar Pointers and Indicator Line							
Tyco Electronics	Alcoswitch	A	B	C	D	E	F
7-1437624-5	PKJ50B1/8	.500(12.7)	.512(13.0)	.420(10.7)	.577(14.7)	.429(10.9)	.113(2.9)
7-1437624-4	*PKJ50B1/4	.500(12.7)	.512(13.0)	.420(10.7)	.577(14.7)	.429(10.9)	.113(2.9)
7-1437624-6	PKJ60B1/4	.630(16.0)	.530(13.5)	.468(11.9)	.758(19.3)	.440(11.2)	.110(2.8)
7-1437624-7	PKJ70B1/4	.760(19.3)	.555(14.1)	.545(13.8)	.915(23.2)	.450(11.4)	.118(3.0)

*Note: Knob uses #4-40 set screw

Catalog 1308390
Issued 9-04
www.tycoelectronics.com

Dimensions are in inches and millimeters unless otherwise specified. Values in parentheses or brackets are metric equivalents.

Dimensions are shown for reference purposes only. Specifications subject to change.

USA: 1-800-522-6752
Canada: 1-905-470-4425
Mexico: 01-800-733-8926
C. America: 52-55-5-729-0425
South America: 55-11-3611-1514
Hong Kong: 852-2735-1628
Japan: 81-44-844-8013
UK: 44-141-810-8967

Knobs, Molded Phenolic

PKJT SERIES

PKJT50B1/4

PKJT70B1/4

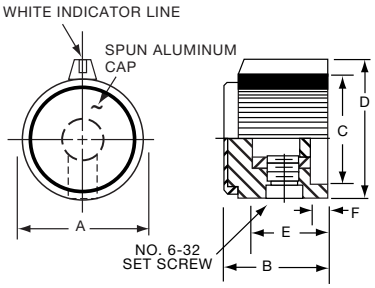

Straight Knurl with Bar Pointer & Indicator Line and Aluminum Spin Cap

Tyco Electronics	Alcoswitch	A	B	C	D	E	F
7-1437624-9	PKJT50B1/8	.515(13.1)	.585(14.9)	.350(8.89)	.595(15.1)	.414(10.5)	.130(3.30)
7-1437624-8	*PKJT50B1/4	.515(13.1)	.585(14.9)	.350(8.89)	.595(15.1)	.414(10.5)	.130(3.30)
8-1437624-0	PKJT60B1/4	.640(16.3)	.605(15.4)	.470(11.9)	.760(19.3)	.445(11.3)	.118(3.00)
8-1437624-1	PKJT70B1/4	.760(19.3)	.625(15.9)	.550(14.0)	.915(23.2)	.445(11.3)	.118(3.00)

*Knob uses #4-40 set screw.

PKNT SERIES

PKNT60B1/4

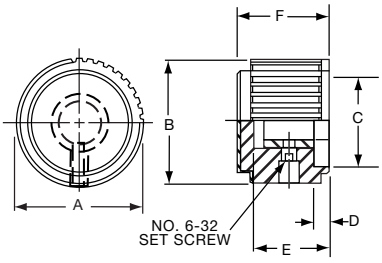

Black Spin Cap with "Diamond Cut" Less Indicator

Tyco Electronics	Alcoswitch	A	B	C	D	E	F
8-1437624-6	PKNT60B1/8	.591(15.0)	.579(14.7)	.394(10.0)	.079(2.01)	.394(10.0)	.472(11.9)
8-1437624-5	PKNT60B1/4	.591(15.0)	.579(14.7)	.394(10.0)	.079(2.01)	.394(10.0)	.472(11.9)
8-1437624-7	PKNT70B1/4	.787(19.9)	.764(19.4)	.571(14.5)	.098(2.49)	.492(12.5)	.591(14.7)
8-1437624-8	PKNT90B1/4	.984(25.0)	.957(24.3)	.748(19.0)	.098(2.49)	.591(15.0)	.689(17.5)

PKN SERIES

PKN60B1/8

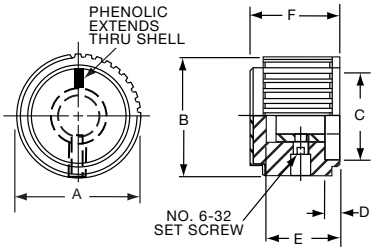

Line Indicator on Natural Aluminum Spin Cap

Tyco Electronics	Alcoswitch	A	B	C	D	E	F
8-1437624-2	PKN60B1/8	.591(15.0)	.579(14.7)	.394(10.0)	.079(2.01)	.394(10.0)	.453(11.5)
	PKN60B1/4	.591(15.0)	.579(14.7))	.394(10.0)	.079(2.01)	.394(10.0)	.453(11.5)
8-1437624-3	PKN70B1/4	.787(20.0)	.764(19.4)	.571(14.5)	.098(2.49)	.492(12.5)	.591(15.0)
8-1437624-4	PKN90B1/4	.984(25.0)	.957(24.3)	.748(19.0)	.098(2.49)	.591(15.0)	.689(17.5)

Catalog 1308390
Issued 9-04
www.tycoelectronics.com

Dimensions are in inches and millimeters unless otherwise specified. Values in parentheses or brackets are metric equivalents.

Dimensions are shown for reference purposes only. Specifications subject to change.

USA: 1-800-522-6752
Canada: 1-905-470-4425
Mexico: 01-800-733-8926
C. America: 52-55-5-729-0425
South America: 55-11-3611-1514
Hong Kong: 852-2735-1628
Japan: 81-44-844-8013
UK: 44-141-810-8967

Knobs, Molded Phenolic

PKS SERIES

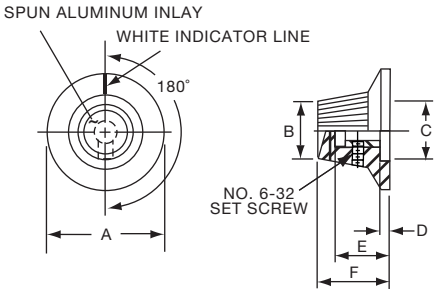

PKS1104B1/4

Straight Knurl with Indicator Line on Skirt							
Tyco Electronics	Alcoswitch	A	B	C	D	E	F
9-1437624-5	PKS1104B1/4	1.12(28.5)	.567(14.4)	.620(15.8)	.090(2.29)	.510(12.95)	.670(17.0)

PKS SERIES

Straight Knurl Aluminum Skirt Has Line or 0-9 Numbers								
Tyco Electronics	Alcoswitch	A	B	C	D	E	F	Marking
9-1437624-4	PKS1103B101/4	1.17(29.6)	.571(14.5)	.620(15.7)	.098(2.49)	.516(13.1)	.670(17.0)	Numbers
9-1437624-7	PKS1106B1/4	1.17(29.6)	.571(14.5)	.618(15.7)	.098(2.49)	.516(13.1)	.670(17.0)	Line
9-1437624-6	PKS1105B101/4	1.17(29.6)	.571(14.5)	.618(15.7)	.098(2.49)	.516(13.1)	.670(17.0)	Numbers

PKS1106B1/4

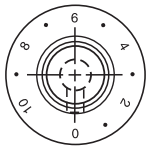

PKS1103B101/4

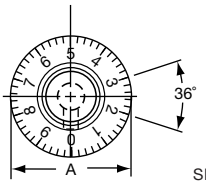

PKS1105B101/4

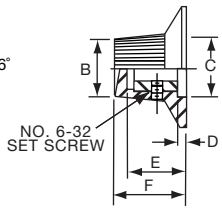

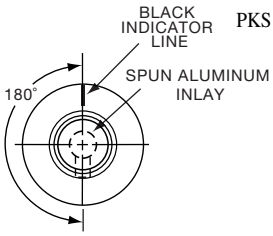

PKS SERIES

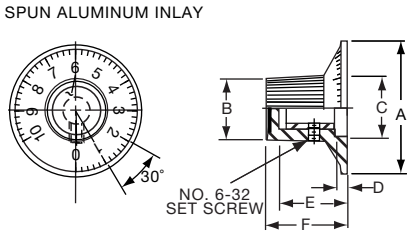

0-10

+5•-5

0-9

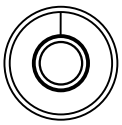

Indicator
Line

PKS1132B51/4

Choice of Indicator Line or 0-9, 0-10, -5+5 Numerals								
Tyco Electronics	Alcoswitch	A	B	C	D	E	F	Marking
1437625-1	PKS1132B51/4	1.18(30.0)	.551(14.0)	.551(14.0)	.118(30.0)	.615(15.62)	.748(19.0)	+5-0-5
1437625-2	PKS1132B91/4	1.18(30.0)	.551(14.0)	.551(14.0)	.118(30.0)	.615(15.62)	.748(19.0)	0-9
9-1437624-9	PKS1132B101/4	1.18(30.0)	.551(14.0)	.551(14.0)	.118(30.0)	.615(15.62)	.748(19.0)	0-10
9-1437624-8	*PKS1132B1/4	1.18(30.0)	.551(14.0)	.551(14.0)	.118(30.0)	.615(15.62)	.748(19.0)	Indicator Line

*1 Set screw 180° from indicator line.

PKS1132B91/4

Catalog 1308390
Issued 9-04
www.tycoelectronics.com

Dimensions are in inches and millimeters unless otherwise specified. Values in parentheses or brackets are metric equivalents.

Dimensions are shown for reference purposes only. Specifications subject to change.

USA: 1-800-522-6752
Canada: 1-905-470-4425
Mexico: 01-800-733-8926
C. America: 52-55-5-729-0425
South America: 55-11-3611-1514
Hong Kong: 852-2735-1628
Japan: 81-44-844-8013
UK: 44-141-810-8967

Knobs, Molded Phenolic

PKS SERIES

PKS90B1/4

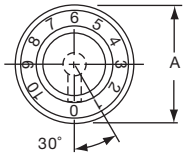

PKS90B101/4

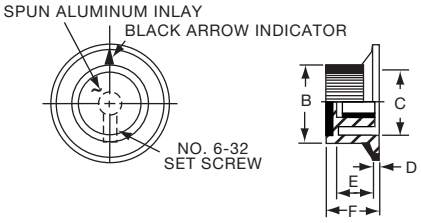

Straight Knurl with Aluminum Skirt Choice of Arrow or 1-10 Numbers								
Tyco Electronics	Alcoswitch	A	B	C	D	E	F	Marking
1437625-5	PKS90B1/4	1.42(36.1)	.917(23.3)	.780(19.8)	.065(1.65)	.490(12.5)	.596(15.1)	Arrow
1437625-6	PKS90B101/4	1.42(36.1)	.917(23.3)	.780(19.8)	.065(1.65)	.490(12.5)	.596(15.1)	Numbers

PKX SERIES

PKX50B1/8

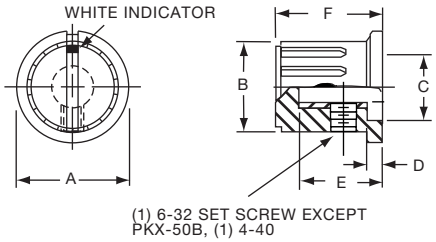

Ribbed Body, Matte Finish with White Square Indicator on Top							
Tyco Electronics	Alcoswitch	A	B	C	D	E	F
1-1437625-5	PKX50B1/8	.590(15.0)	.472(12.0)	.374(9.49)	.059(1.50)	.463(11.76)	.551(14.0)
1-1437625-4	PKX50B1/4	.590(15.0)	.472(12.0)	.374(9.49)	.059(1.50)	.463(11.76)	.551(14.0)
1-1437625-7	PKX60B1/8	.787(20.0)	.625(15.9)	.472(12.0)	.078(1.98)	.510(13.0)	.598(15.2)
1-1437625-6	PKX60B1/4	.787(20.0)	.625(15.9)	.472(12.0)	.078(1.98)	.510(13.0)	.598(15.2)

PKX SERIES

PKX110B1/4

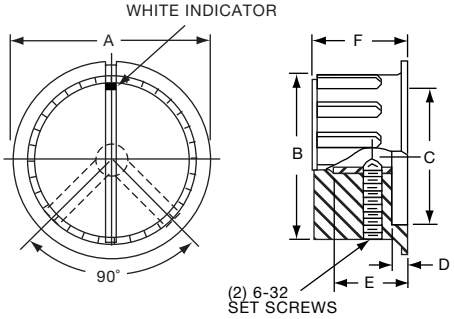

Ribbed Body, Matte Finish with White Square Indicator on Top							
Tyco Electronics	Alcoswitch	A	B	C	D	E	F
1-1437625-1	PKX100B1/4	1.17(29.7)	.970(24.6)	.780(19.81)	.114(2.90)	.570(14.48)	.674(17.12)
1-1437625-2	PKX110B1/4	1.37(34.8)	1.120(28.45)	.940(23.88)	.100(2.54)	.527(13.38)	.705(17.91)
1-1437625-3	PKX130B1/4	1.57(40.0)	1.308(33.22)	1.09(27.6)	.118(3.00)	.623(15.82)	.750(19.05)

Catalog 1308390
Issued 9-04
www.tycoelectronics.com

Dimensions are in inches and millimeters unless otherwise specified. Values in parentheses or brackets are metric equivalents.

Dimensions are shown for reference purposes only. Specifications subject to change.

USA: 1-800-522-6752
Canada: 1-905-470-4425
Mexico: 01-800-733-8926
C. America: 52-55-5-729-0425
South America: 55-11-3611-1514
Hong Kong: 852-2735-1628
Japan: 81-44-844-8013
UK: 44-141-810-8967

Knob Accessories

ACCESSORIES

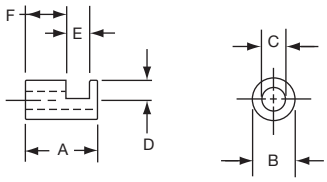

KR1

Shaft Hole Size Adaptors							
Tyco Electronics	Alcoswitch	A	B	C	D	E	F
9-1437627-6	KR1 (1/4"TO1/8")	.374(9.50)	.250(6.35)	.128(3.25)	.122(3.10)	.217(5.51)	.122(3.10)
9-1437627-7	KR2 (1/4"TO3/16")	.375(9.53)	.250(6.35)	.190(4.83)	.122(3.10)	.216(5.49)	.123(3.12)
9-1437627-8	KR3 (1/4"TO4MM)	.375(9.53)	.248(6.30)	.161(4.09)	.122(3.10)	.216(5.49)	.123(3.12)

Catalog 1308390
Issued 9-04
www.tycoelectronics.com

Dimensions are in inches and millimeters unless otherwise specified. Values in parentheses or brackets are metric equivalents.

Dimensions are shown for reference purposes only. Specifications subject to change.

USA: 1-800-522-6752
Canada: 1-905-470-4425
Mexico: 01-800-733-8926
C. America: 52-55-5-729-0425
South America: 55-11-3611-1514
Hong Kong: 852-2735-1628
Japan: 81-44-844-8013
UK: 44-141-810-8967

Мы молодая и активно развивающаяся компания в области поставок электронных компонентов. Мы поставляем электронные компоненты отечественного и импортного производства напрямую от производителей и с крупнейших складов мира.

Благодаря сотрудничеству с мировыми поставщиками мы осуществляем комплексные и плановые поставки широчайшего спектра электронных компонентов.

Собственная эффективная логистика и склад в обеспечивает надежную поставку продукции в точно указанные сроки по всей России.

Мы осуществляем техническую поддержку нашим клиентам и предпродажную проверку качества продукции. На все поставляемые продукты мы предоставляем гарантию .

Осуществляем поставки продукции под контролем ВП МО РФ на предприятия военно-промышленного комплекса России , а также работаем в рамках 275 ФЗ с открытием отдельных счетов в уполномоченном банке. Система менеджмента качества компании соответствует требованиям ГОСТ ISO 9001.

Минимальные сроки поставки, гибкие цены, неограниченный ассортимент и индивидуальный подход к клиентам являются основой для выстраивания долгосрочного и эффективного сотрудничества с предприятиями радиоэлектронной промышленности, предприятиями ВПК и научно-исследовательскими институтами России.

С нами вы становитесь еще успешнее!

Наши контакты:

Телефон: +7 812 627 14 35

Электронная почта: sales@st-electron.ru

Адрес: 198099, Санкт-Петербург, Промышленная ул, дом № 19, литера Н, помещение 100-Н Офис 331