8-INPUT MULTIPLEXER/REGISTER; 3-STATE

FEATURES

- Non-transparent data latches
- Transparent address latch
- Easily expanding
- Complementary outputs
- Output capability: bus driver
- I_{CC} category: MSI

GENERAL DESCRIPTION

The 74HC/HCT356 are high-speed Si-gate CMOS devices and are pin compatible with low power Schottky TTL (LSTTL). They are specified in compliance with JEDEC standard no. 7A.

The 74HC/HCT356 data selectors/multiplexers contain full on-chip binary decoding, to select one-of-eight data sources. The data select address is stored in transparent latches that are enabled by a LOW on the latch enable input $\overline{LE}$.

Data on the 8 input lines (D_0 to D_7) is clocked into a edge-triggered data register by a LOW-to-HIGH transition of the clock (CP).

When the output enable input $\overline{OE}_1$ = HIGH, $\overline{OE}_2$ = HIGH or OE_3 = LOW, the outputs go to the high impedance OFF-state.

Operation of these output enable inputs does not affect the state of the latches and register.

SYMBOL	PARAMETER	CONDITIONS	TYPICAL		UNIT
			HC	HCT	
t_{PHL}/ t_{PLH}	propagation delay S_n, $\overline{LE}$ to Y, $\overline{Y}$ CP to Y, $\overline{Y}$	C_L = 15 pF V_{CC} = 5 V	24 20	25 22	ns ns
C_I	input capacitance		3.5	3.5	pF
C_{PD}	power dissipation capacitance per package	notes 1 and 2	123	125	pF

GND = 0 V; T_{amb} = 25 °C; $t_r = t_f$ = 6 ns

Notes

1. C_{PD} is used to determine the dynamic power dissipation (P_D in μW):
   $P_D = C_{PD} \times V_{CC}^2 \times f_i + \Sigma (C_L \times V_{CC}^2 \times f_o)$ where:
   f_i = input frequency in MHz
   f_o = output frequency in MHz
   $\Sigma (C_L \times V_{CC}^2 \times f_o)$ = sum of outputs
   C_L = output load capacitance in pF
   V_{CC} = supply voltage in V
2. For HC the condition is V_I = GND to V_{CC}
   For HCT the condition is V_I = GND to V_{CC} − 1.5 V

PACKAGE OUTLINES

20-lead DIL; plastic (SOT146).

20-lead mini-pack; plastic (SO20; SOT163A).

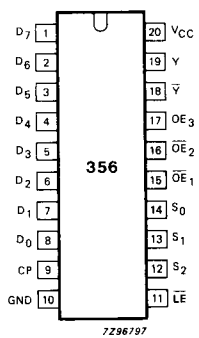

Fig. 1 Pin configuration.

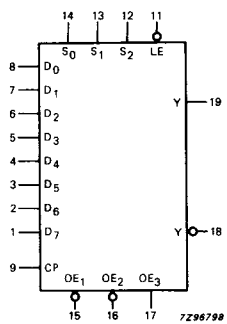

Fig. 2 Logic symbol.

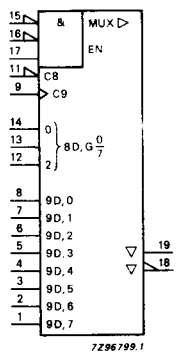

Fig. 3 IEC logic symbol.

PIN DESCRIPTION

PIN NO.	SYMBOL	NAME AND FUNCTION
8, 7, 6, 5, 4, 3, 2, 1	D_0 to D_7	data inputs
9	CP	clock input data (LOW-to-HIGH, edge-triggered)
10	GND	ground (0 V)
11	$\overline{LE}$	address latch enable input (active LOW)
14, 13, 12	S_0, S_1, S_2	select inputs
15, 16	$\overline{OE}_1$, $\overline{OE}_2$	output enable inputs (active LOW)
17	OE_3	output enable input (active HIGH)
18	$\overline{Y}$	3-state multiplexer output (active LOW)
19	Y	3-state multiplexer output (active HIGH)
20	V_{CC}	positive supply voltage

FUNCTION TABLE

INPUTS							OUTPUTS		DESCRIPTION
ADDRESS *				OUTPUT ENABLE					
S_2	S_1	S_0	CP	$\overline{OE}_1$	$\overline{OE}_2$	OE_3	Y	$\overline{Y}$	
X	X	X	X	H	X	X	Z	Z	outputs in high impedance OFF-state
X	X	X	X	X	H	X	Z	Z	
X	X	X	X	X	X	L	Z	Z	
L	L	L	↑	L	L	H	D_{0n}	$\overline{D}_{0n}$	data is clocked into latch
L	L	H	↑	L	L	H	D_{1n}	$\overline{D}_{1n}$	
L	H	L	↑	L	L	H	D_{2n}	$\overline{D}_{2n}$	
L	H	H	↑	L	L	H	D_{3n}	$\overline{D}_{3n}$	
H	L	L	↑	L	L	H	D_{4n}	$\overline{D}_{4n}$	
H	L	H	↑	L	L	H	D_{5n}	$\overline{D}_{5n}$	
H	H	L	↑	L	L	H	D_{6n}	$\overline{D}_{6n}$	
H	H	H	↑	L	L	H	D_{7n}	$\overline{D}_{7n}$	
L	L	L	**	L	L	H	D_{0p}	$\overline{D}_{0p}$	outputs do not change states
L	L	H	**	L	L	H	D_{1p}	$\overline{D}_{1p}$	
L	H	L	**	L	L	H	D_{2p}	$\overline{D}_{2p}$	
L	H	H	**	L	L	H	D_{3p}	$\overline{D}_{3p}$	
H	L	L	**	L	L	H	D_{4p}	$\overline{D}_{4p}$	
H	L	H	**	L	L	H	D_{5p}	$\overline{D}_{5p}$	
H	H	L	**	L	L	H	D_{6p}	$\overline{D}_{6p}$	
H	H	H	**	L	L	H	D_{7p}	$\overline{D}_{7p}$	

D_{0n} to D_{7n} = data present at inputs D_0 to D_7 when the data latch clock made the transition from LOW-to-HIGH

D_{0p} to D_{7p} = data previously latched into the data latch by the LOW-to-HIGH transition of the data latch clock

H = HIGH voltage level
L = LOW voltage level
X = don't care
↑ = LOW-to-HIGH CP transition
↓ = HIGH-to-LOW CP transition
Z = high impedance OFF-state

* This column shows the input address set-up with $\overline{LE}$ = LOW (address latch is transparent).
** CP is HIGH, LOW or ↓.

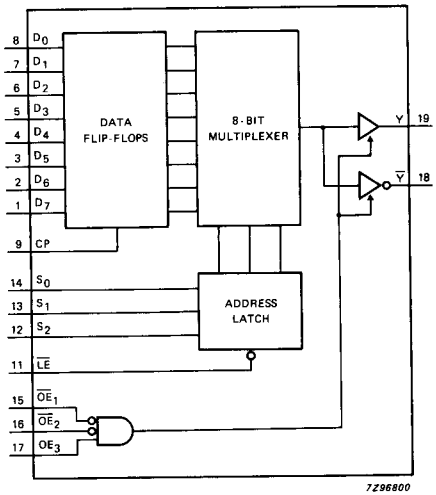

Fig. 4 Functional diagram.

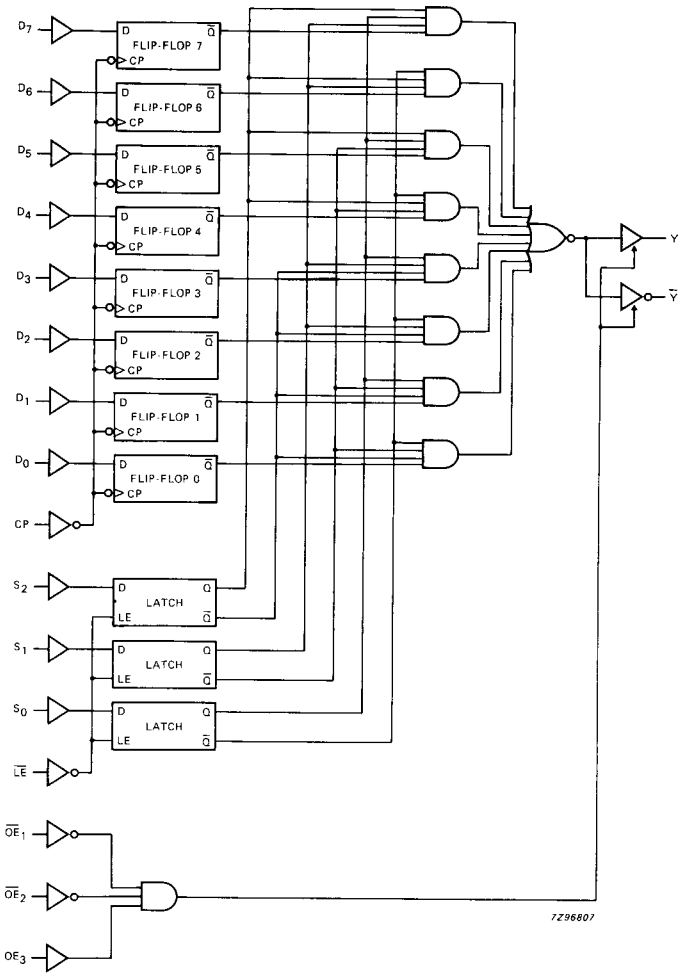

Fig. 5 Logic diagram.

DC CHARACTERISTICS FOR 74HC

For the DC characteristics see chapter "HCMOS family characteristics", section "Family specifications".

Output capability: bus driver
I_{CC} category: MSI

AC CHARACTERISTICS FOR 74HC

GND = 0 V; $t_r = t_f = 6$ ns; $C_L = 50$ pF

SYMBOL	PARAMETER	T_{amb} (°C) 74HC +25 min.	+25 typ.	+25 max.	−40 to +85 min.	−40 to +85 max.	−40 to +125 min.	−40 to +125 max.	UNIT	TEST CONDITIONS V_{CC} V	TEST CONDITIONS WAVEFORMS
t_{PHL}/ t_{PLH}	propagation delay CP to Y, $\overline{Y}$		66 24 19	240 48 41		300 60 51		360 72 61	ns	2.0 4.5 6.0	Fig. 6
t_{PHL}/ t_{PLH}	propagation delay S_n to Y, $\overline{Y}$		77 28 22	260 52 44		325 65 55		390 78 66	ns	2.0 4.5 6.0	Fig. 7
t_{PHL}/ t_{PLH}	propagation delay $\overline{LE}$ to Y, $\overline{Y}$		77 28 22	270 54 46		340 68 58		405 81 69	ns	2.0 4.5 6.0	Fig. 8
t_{PZH}/ t_{PZL}	3-state output enable time $\overline{OE}_n$ to Y, $\overline{Y}$		41 15 12	125 25 21		155 31 26		190 38 32	ns	2.0 4.5 6.0	Fig. 11
t_{PZH}/ t_{PZL}	3-state output enable time OE_3 to Y, $\overline{Y}$		47 17 14	150 30 26		190 38 33		225 45 38	ns	2.0 4.5 6.0	Fig. 11
t_{PHZ}/ t_{PLZ}	3-state output disable time $\overline{OE}_n$ to Y, $\overline{Y}$		50 18 14	155 31 26		195 39 33		235 47 40	ns	2.0 4.5 6.0	Fig. 11
t_{PHZ}/ t_{PLZ}	3-state output disable time OE_3 to Y, $\overline{Y}$		58 21 17	155 31 26		195 39 33		235 47 40	ns	2.0 4.5 6.0	Fig. 11
t_{THL}/ t_{TLH}	output transition time		14 5 4	60 12 10		75 15 13		90 18 15	ns	2.0 4.5 6.0	Figs 6, 7 and 8
t_W	clock pulse width CP HIGH or LOW	80 16 14	17 6 5		100 20 17		120 24 20		ns	2.0 4.5 6.0	Fig. 6
t_W	latch enable pulse width $\overline{LE}$ LOW	80 16 14	17 6 5		100 20 17		120 24 20		ns	2.0 4.5 6.0	Fig. 8
t_{su}	set-up time D_n to CP	50 10 9	11 4 3		65 13 11		75 15 13		ns	2.0 4.5 6.0	Fig. 10
t_{su}	set-up time S_n to $\overline{LE}$	50 10 9	14 5 4		65 13 11		75 15 13		ns	2.0 4.5 6.0	Fig. 9
t_h	hold time D_n to CP	5 5 5	−6 −2 −2		5 5 5		5 5 5		ns	2.0 4.5 6.0	Fig. 10
t_h	hold time S_n to $\overline{LE}$	5 5 5	−8 −3 −2		5 5 5		5 5 5		ns	2.0 4.5 6.0	Fig. 9

DC CHARACTERISTICS FOR 74HCT

For the DC characteristics see chapter "HCMOS family characteristics", section "Family specifications".

Output capability: bus driver
I_{CC} category: MSI

Note to HCT types

The value of additional quiescent supply current (ΔI_{CC}) for a unit load of 1 is given in the family specifications.
To determine ΔI_{CC} per input, multiply this value by the unit load coefficient shown in the table below.

INPUT	UNIT LOAD COEFFICIENT
D_n, S_n	0.2
OE_3	0.25
$\overline{LE}$	0.5
$\overline{OE}_n$, CP	1.0

AC CHARACTERISTICS FOR 74HCT

GND = 0 V; $t_r = t_f = 6$ ns; $C_L = 50$ pF

SYMBOL	PARAMETER	T_{amb} (°C)							UNIT	TEST CONDITIONS	
		74HCT								V_{CC} V	WAVEFORMS
		+25			−40 to +85		−40 to +125				
		min.	typ.	max.	min.	max.	min.	max.			
t_{PHL}/ t_{PLH}	propagation delay CP to Y, $\overline{Y}$		26	51		64		77	ns	4.5	Fig. 6
t_{PHL}/ t_{PLH}	propagation delay S_n to Y, $\overline{Y}$		28	59		74		89	ns	4.5	Fig. 7
t_{PHL}/ t_{PLH}	propagation delay $\overline{LE}$ to Y, $\overline{Y}$		29	63		79		95	ns	4.5	Fig. 8
t_{PZH}/ t_{PZL}	3-state output enable time $\overline{OE}_n$ to Y, $\overline{Y}$		17	34		43		51	ns	4.5	Fig. 11
t_{PZH}/ t_{PZL}	3-state output enable time OE_3 to Y, $\overline{Y}$		18	34		43		51	ns	4.5	Fig. 11
t_{PHZ}/ t_{PLZ}	3-state output disable time $\overline{OE}_n$ to Y, $\overline{Y}$		17	33		41		50	ns	4.5	Fig. 11
t_{PHZ}/ t_{PLZ}	3-state output disable time OE_3 to Y, $\overline{Y}$		20	33		41		50	ns	4.5	Fig. 11
t_{THL}/ t_{TLH}	output transition time		5	12		15		18	ns	4.5	Figs 6, 7 and 8
t_W	clock pulse width CP HIGH or LOW	16	8		20		24		ns	4.5	Fig. 6
t_W	latch enable pulse width $\overline{LE}$ LOW	16	6		20		24		ns	4.5	Fig. 8
t_{su}	set-up time D_n to CP	10	4		13		15		ns	4.5	Fig. 10
t_{su}	set-up time S_n to $\overline{LE}$	10	5		13		15		ns	4.5	Fig. 9
t_h	hold time D_n to CP	5	0		5		5		ns	4.5	Fig. 10
t_h	hold time S_n to $\overline{LE}$	5	−2		5		5		ns	4.5	Fig. 9

AC WAVEFORMS

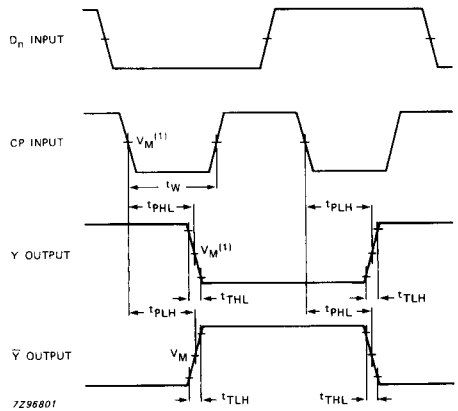

Fig. 6 Waveforms showing the clock (CP) to the output (Y, $\overline{Y}$) propagation delays, the clock pulse width and the output transition times.

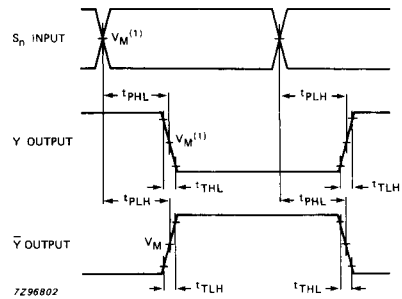

Fig. 7 Waveforms showing the select input (S_n) to output (Y, $\overline{Y}$) propagation delays and the output transition times ($\overline{LE}$ = LOW).

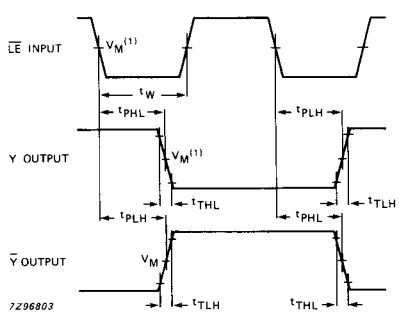

Fig. 8 Waveforms showing the address latch enable input ($\overline{LE}$) pulse width, the latch enable input to output (Y, $\overline{Y}$) propagation delays and the output transition times.

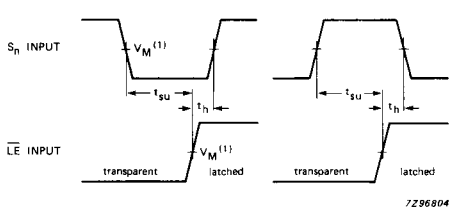

Fig. 9 Waveforms showing the set-up and hold times for the select input (S_n) to the address latch enable input ($\overline{LE}$).

AC WAVEFORMS

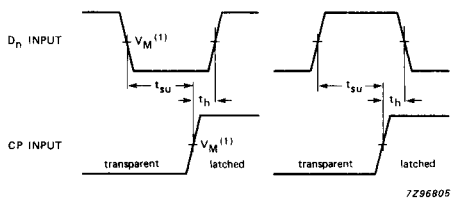

Fig. 10 Waveforms showing the set-up and hold times for the data input (D_n) to the clock (CP).

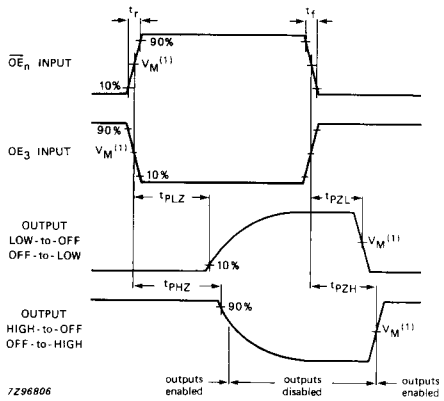

Fig. 11 Waveforms showing the 3-state enable and disable times.

Note to AC waveforms

(1) HC : V_M = 50%; V_I = GND to V_{CC}.
HCT: V_M = 1.3 V; V_I = GND to 3 V.

Мы молодая и активно развивающаяся компания в области поставок электронных компонентов. Мы поставляем электронные компоненты отечественного и импортного производства напрямую от производителей и с крупнейших складов мира.

Благодаря сотрудничеству с мировыми поставщиками мы осуществляем комплексные и плановые поставки широчайшего спектра электронных компонентов.

Собственная эффективная логистика и склад в обеспечивает надежную поставку продукции в точно указанные сроки по всей России.

Мы осуществляем техническую поддержку нашим клиентам и предпродажную проверку качества продукции. На все поставляемые продукты мы предоставляем гарантию .

Осуществляем поставки продукции под контролем ВП МО РФ на предприятия военно-промышленного комплекса России , а также работаем в рамках 275 ФЗ с открытием отдельных счетов в уполномоченном банке. Система менеджмента качества компании соответствует требованиям ГОСТ ISO 9001.

Минимальные сроки поставки, гибкие цены, неограниченный ассортимент и индивидуальный подход к клиентам являются основой для выстраивания долгосрочного и эффективного сотрудничества с предприятиями радиоэлектронной промышленности, предприятиями ВПК и научно-исследовательскими институтами России.

С нами вы становитесь еще успешнее!

Наши контакты:

Телефон: +7 812 627 14 35

Электронная почта: sales@st-electron.ru

Адрес: 198099, Санкт-Петербург, Промышленная ул, дом № 19, литера Н, помещение 100-Н Офис 331