APPLICATION NOTE

A V A I L A B L E

AN56

4K X20C05 512 x 8

High Speed AUTOSTORE™ NOVRAM

FEATURES

- **Fast Access Time: 35ns, 45ns, 55ns**
- **High Reliability**
  - **—Endurance: 1,000,000 Nonvolatile Store Operations**
  - **—Retention: 100 Years Minimum**
- **Power-on Recall**
  - **—E^2PROM Data Automatically Recalled Into SRAM Upon Power-up**
- **AUTOSTORE™ NOVRAM**
  - **—User Enabled Option**
  - **—Automatically Stores SRAM Data Into the E^2PROM Array When V_{CC} Low Threshold is Detected**
  - **—Open Drain AUTOSTORE Status Output Pin**
- **Software Data Protection**
  - **—Locks Out Inadvertent Store Operations**
- **Low Power CMOS**
  - **—Standby: 250µA**
- **Infinite E^2PROM Array Recall, and RAM Read and Write Cycles**
- **Upward compatible with X20C16 (16K)**

DESCRIPTION

The Xicor X20C05 is a 512 x 8 NOVRAM featuring a high-speed static RAM overlaid bit-for-bit with a non-volatile electrically erasable PROM (E^2PROM). The X20C05 is fabricated with advanced CMOS floating gate technology to achieve high speed with low power and wide power-supply margin. The X20C05 features the JEDEC approved pinout for byte-wide memories, compatible with industry standard RAMs, ROMs, EPROMs, and E^2PROMs.

The NOVRAM design allows data to be easily transferred from RAM to E^2PROM (store) and E^2PROM to RAM (recall). The store operation is completed in 5ms or less and the recall operation is completed in 5µs or less.

Xicor NOVRAMS are designed for unlimited write operations to RAM, either from the host or recalls from E^2PROM, and a minimum 1,000,000 store operations to the E^2PROM. Data retention is specified to be greater than 100 years.

PIN CONFIGURATION

PLASTIC CERDIP

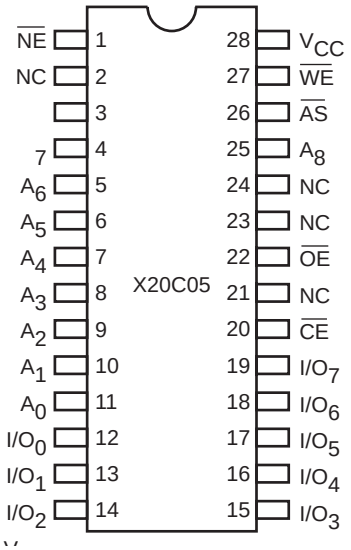

3827 FHD F02

LCC PLCC

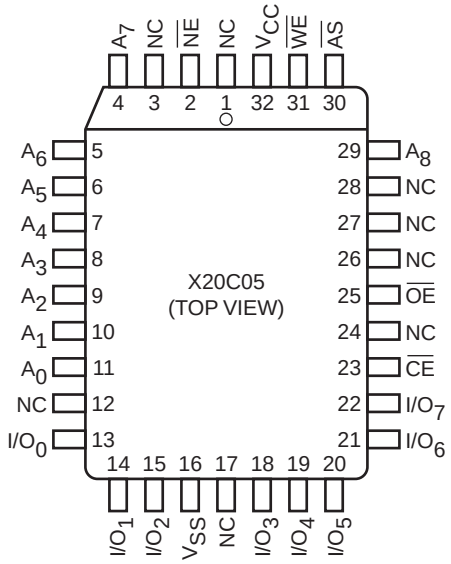

3827 FHD F03

AUTOSTORE™ NOVRAM is a trademark of Xicor, Inc.

©Xicor, Inc. 1991 - 1997 Patents Pending

PIN DESCRIPTIONS

Addresses (A_0–A_8)

The Address inputs select an 8-bit memory location during a read or write operation.

Chip Enable ($\overline{CE}$)

The Chip Enable input must be LOW to enable all read/write operations. When $\overline{CE}$ is HIGH, power consumption is reduced.

Output Enable ($\overline{OE}$)

The Output Enable input controls the data output buffers and is used to initiate read and recall operations. Output Enable LOW disables a store operation regardless of the state of $\overline{CE}$, $\overline{WE}$, or $\overline{NE}$.

Data In/Data Out (I/O_0–I/O_7)

Data is written to or read from the X20C05 through the I/O pins. The I/O pins are placed in the high impedance state when either $\overline{CE}$ or $\overline{OE}$ is HIGH or when $\overline{NE}$ is LOW.

Write Enable ($\overline{WE}$)

The Write Enable input controls the writing of data to the RAM.

Nonvolatile Enable ($\overline{NE}$)

The Nonvolatile Enable input controls the recall function to the E^2PROM array.

AUTOSTORE Output ($\overline{AS}$)

$\overline{AS}$ is an open drain output which, when asserted indicates V_{CC} has fallen below the AUTOSTORE threshold (V_{ASTH}). $\overline{AS}$ may be wire-ORed with multiple open drain outputs and used as an interrupt input to a microcontroller.

PIN NAMES

Symbol	Description
A_0–A_8	Address Inputs
I/O_0–I/O_7	Data Input/Output
$\overline{WE}$	Write Enable
$\overline{CE}$	Chip Enable
$\overline{OE}$	Output Enable
$\overline{NE}$	Nonvolatile Enable
$\overline{AS}$	AUTOSTORE Output
V_{CC}	+5V
V_{SS}	Ground
NC	No Connect

3827 PGM T01

FUNCTIONAL DIAGRAM

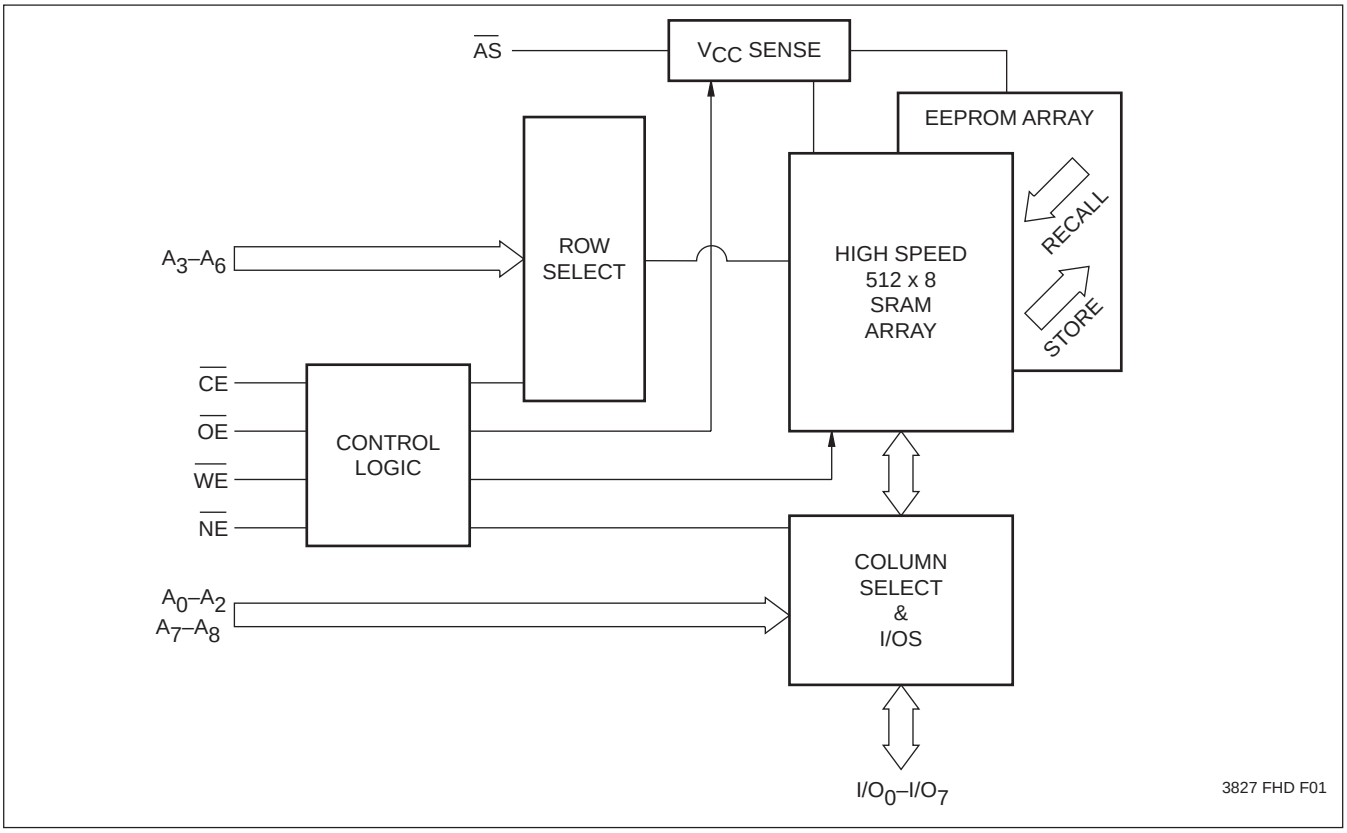

DEVICE OPERATION

The $\overline{CE}$, $\overline{OE}$, $\overline{WE}$ and $\overline{NE}$ inputs control the X20C05 operation. The X20C05 byte-wide NOVRAM uses a 2-line control architecture to eliminate bus contention in a system environment. The I/O bus will be in a high impedance state when either $\overline{OE}$ or $\overline{CE}$ is HIGH, or when $\overline{NE}$ is LOW.

RAM Operations

RAM read and write operations are performed as they would be with any static RAM. A read operation requires $\overline{CE}$ and $\overline{OE}$ to be LOW with $\overline{WE}$ and $\overline{NE}$ HIGH. A write operation requires $\overline{CE}$ and $\overline{WE}$ to be LOW with $\overline{NE}$ HIGH. There is no limit to the number of read or write operations performed to the RAM portion of the X20C05.

MEMORY TRANSFER OPERATIONS

There are two memory transfer operations: a recall operation whereby the data stored in the E^2PROM array is transferred to the RAM array; and a store operation which causes the entire contents of the RAM array to be stored in the E^2PROM array.

Recall operations are performed automatically upon power-up and under host system control when $\overline{NE}$, $\overline{OE}$ and $\overline{CE}$ are LOW and $\overline{WE}$ is HIGH. The recall operation takes a maximum of 5µs.

There are two methods of initiating a store operation. The first is the software store command. This command takes the place of the hardware store employed on the X20C04. This command is issued by entering into the special command mode: $\overline{NE}$, $\overline{CE}$, and $\overline{WE}$ strobe LOW while at the same time a specific address and data combination is sent to the device. This is a three step operation: the first address/data combination is 155[H]/AA[H]; the second combination is 0AA[H]/55[H]; and the final command combination is 155[H]/33[H]. This sequence of pseudo write operations will immediately initiate a store operation. Refer to the software command timing diagrams for details on set and hold times for the various signals.

The second method of storing data is through the AUTOSTORE command. When enabled, data is automatically stored from the RAM into the E^2PROM array whenever V_{CC} falls below the preset AUTOSTORE threshold. This feature is enabled by performing the first two steps for the software store with the command combination being 155[H]/CC[H].

The AUTOSTORE feature is disabled by issuing the three step command sequence with the command combination being 155[H]/CD[H]. The AUTOSTORE feature will also be reset if V_{CC} falls below the power-up reset threshold (approximately 3.5V) and is then raised back into the operating range.

DATA PROTECTION

The X20C05 supports two methods of protecting the nonvolatile data.

—If after power-up the AUTOSTORE feature is not enabled, no AUTOSTORE can occur.

—If after power-up no RAM write operations have occurred no store operation can be initiated. The software store and AUTOSTORE commands will be ignored.

SYMBOL TABLE

WAVEFORM	INPUTS	OUTPUTS
	Must be steady	Will be steady
	May change from LOW to HIGH	Will change from LOW to HIGH
	May change from HIGH to LOW	Will change from HIGH to LOW
	Don't Care: Changes Allowed	Changing: State Not Known
	N/A	Center Line is High Impedance

ABSOLUTE MAXIMUM RATINGS*

Temperature under Bias ..... –65°C to +135°C
Storage Temperature ..... –65°C to +150°C
Voltage on any Pin with
Respect to V_{SS} ..... –1V to +7V
D.C. Output Current 10mA
Lead Temperature (Soldering, 10 seconds)..... 300°C

RECOMMENDED OPERATING CONDITIONS

Temperature	Min.	Max.
Commercial	0°C	+70°C
Industrial	–40°C	+85°C
Military	–55°C	+125°C

3827 PGM T02.1

***COMMENT**

Stresses above those listed under "Absolute Maximum Ratings" may cause permanent damage to the device. This is a stress rating only and the functional operation of the device at these or any other conditions above those indicated in the operational sections of this specification is not implied. Exposure to absolute maximum rating conditions for extended periods may affect device reliability.

Supply Voltage	Limits
X20C05	5V ±10%

3827 PGM T03.1

D.C. OPERATING CHARACTERISTICS (Over recommended operating conditions unless otherwise specified.)

Symbol	Parameter	Limits			Test Conditions
		Min.	Max.	Units	
I_{CC1}	V_{CC} Current (Active)		100	mA	$\overline{NE} = \overline{WE} = V_{IH}$, $\overline{CE} = \overline{OE} = V_{IL}$ Address Inputs = 0.4V/2.4V Levels @ f = 20MHz. All I/Os = Open
I_{CC2}	V_{CC} Current During Store		5	mA	All Inputs = V_{IH} All I/Os = Open
I_{CC3}	V_{CC} Current During AUTOSTORE		2.5	mA	
I_{SB1}	V_{CC} Standby Current (TTL Input)		10	mA	$\overline{CE} = V_{IH}$ All Other Inputs = V_{IH}, All I/Os = Open
I_{SB2}	V_{CC} Standby Current (CMOS Input)		250	µA	All Inputs = V_{CC} – 0.3V All I/Os = Open
I_{LI}	Input Leakage Current		10	µA	$V_{IN} = V_{SS}$ to V_{CC}
I_{LO}	Output Leakage Current		10	µA	$V_{OUT} = V_{SS}$ to V_{CC}, $\overline{CE} = V_{IH}$
V_{IL}(1)	Input LOW Voltage	–1	0.8	V	
V_{IH}(1)	Input HIGH Voltage	2	V_{CC} + 0.5	V	
V_{OL}	Output LOW Voltage		0.4	V	I_{OL} = 4mA
V_{OLAS}	AUTOSTORE Output		0.4	V	I_{OLAS} = 1mA
V_{OH}	Output HIGH Voltage	2.4		V	I_{OH} = –4mA

3827 PGM T04.3

POWER-UP TIMING

Symbol	Parameter	Max.	Units
t_{PUR}(2)	Power-Up to RAM Operation	100	µs
t_{PUW}(2)	Power-Up to Nonvolatile Operation	5	ms

3827 PGM T05

CAPACITANCE T_A = +25°C, f = 1MHz, V_{CC} = 5V.

Symbol	Test	Max.	Units	Conditions
$C_{I/O}$(2)	Input/Output Capacitance	10	pF	$V_{I/O}$ = 0V
C_{IN}(2)	Input Capacitance	6	pF	V_{IN} = 0V

3827 PGM T06.2

Notes: (1) V_{IL} min. and V_{IH} max. are for reference only and are not tested.
(2) This parameter is periodically sampled and not 100% tested.

ENDURANCE AND DATA RETENTION

Parameter	Min.	Units
Endurance	100,000	Data Changes Per Bit
Store Cycles	1,000,000	Store Cycles
Data Retention	100	Years

3827 PGM T07.1

MODE SELECTION

$\overline{CE}$	$\overline{WE}$	$\overline{NE}$	$\overline{OE}$	Mode	I/O	Power
H	X	X	X	Not Selected	Output High Z	Standby
L	H	H	L	Read RAM	Output Data	Active
L	L	H	H	Write “1” RAM	Input Data High	Active
L	L	H	H	Write “0” RAM	Input Data Low	Active
L	H	L	L	Array Recall	Output High Z	Active
L	L	L	H	Software Command	Input Data	Active
L	H	H	H	Output Disabled	Output High Z	Active
L	L	L	L	Not Allowed	Output High Z	Active
L	H	L	H	No Operation	Output High Z	Active

3827 PGM T09

EQUIVALENT A.C. LOAD CIRCUIT

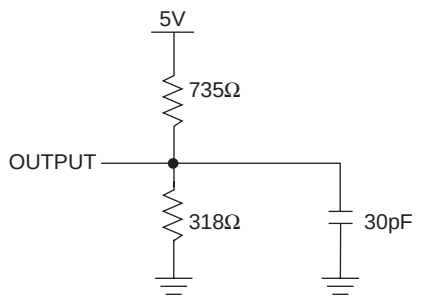

3827 FHD F04

A.C. CONDITIONS OF TEST

Input Pulse Levels	0V to 3V
Input Rise and Fall Times	5ns
Input and Output Timing Levels	1.5V

3827 PGM T08.2

A.C. CHARACTERISTICS (Over the recommended operating conditions unless otherwise specified)

Read Cycle Limits

Symbol	Parameter	X20C05-35		X20C05-45		X20C05-55		Units
		Min.	Max.	Min.	Max.	Min.	Max.	
t_{RC}	Read Cycle Time	35		45		55		ns
t_{CE}	Chip Enable Access Time		35		45		55	ns
t_{AA}	Address Access Time		35		45		55	ns
t_{OE}	Output Enable Access Time		20		25		30	ns
t_{LZ}(3)	Chip Enable to Output in Low Z	0		0		0		ns
t_{OLZ}(3)	Output Enable to Output in Low Z	0		0		0		ns
t_{HZ}(3)	Chip Disable to Output in High Z		15		20		25	ns
t_{OHZ}(3)	Output Disable to Output in High Z		15		20		25	ns
t_{OH}	Output Hold From Address Change	0		0		0		ns

3827 PGM T10

Read Cycle

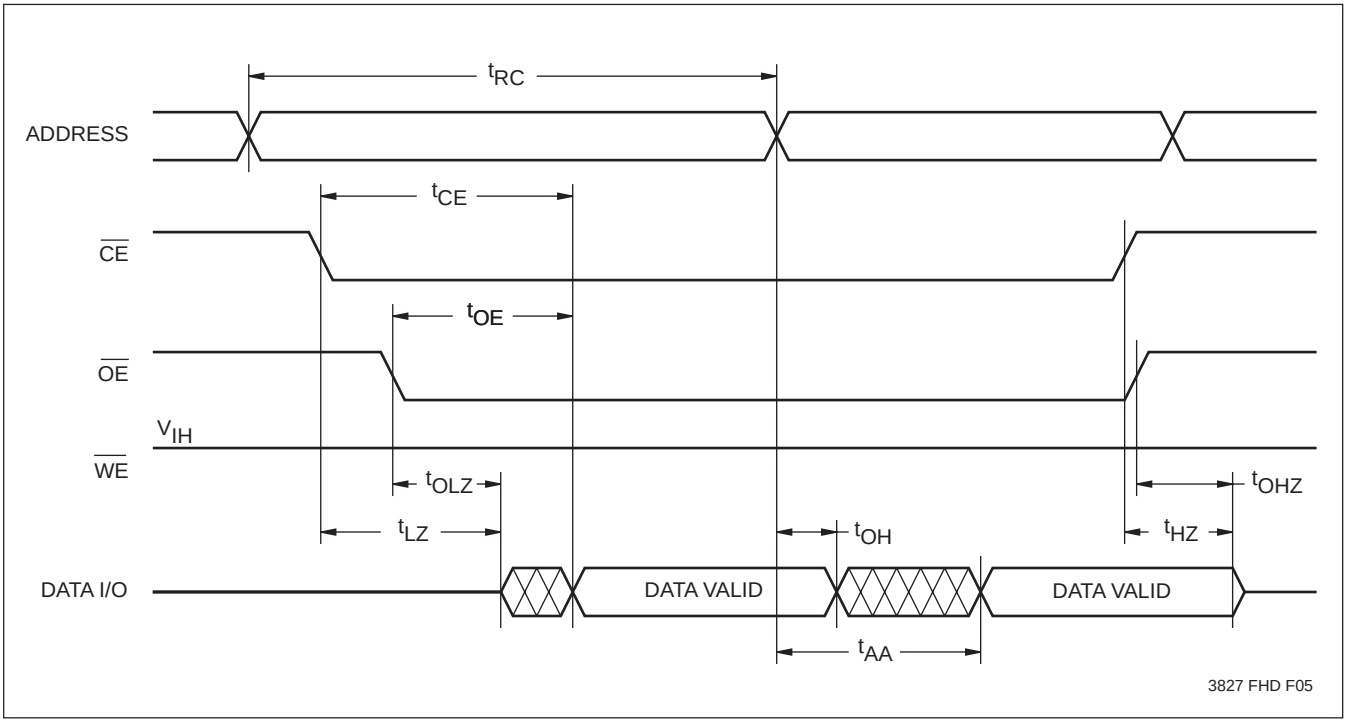

Note: (3) t_{LZ} min., t_{HZ}, t_{OLZ} min., and t_{OHZ} are periodically sampled and not 100% tested. t_{HZ} and t_{OHZ} are measured, with C_L = 5pF, from the point when $\overline{CE}$ or $\overline{OE}$ return HIGH (whichever occurs first) to the time when the outptus are no longer driven.

Write Cycle Limits

Symbol	Parameter	X20C05-25		X20C05-35		X20C05-45		X20C05-55		Units
		Min.	Max.	Min.	Max.	Min.	Max.	Min.	Max.	
t_{WC}	Write Cycle Time	25		35		45		55		ns
t_{CW}	Chip Enable to End of Write Input	25		30		35		40		ns
t_{AS}	Address Setup Time	0		0		0		0		ns
t_{WP}	Write Pulse Width	30		30		35		40		ns
t_{WR}	Write Recovery Time	0		0		0		0		ns
t_{DW}	Data Setup to End of Write	15		15		20		25		ns
t_{DH}	Data Hold Time	0		0		3		3		ns
t_{WZ}(4)	Write Enable to Output in High Z				15		20		25	ns
t_{OW}(4)	Output Active from End of Write	5		5		5		5		ns
t_{OZ}(4)	Output Enable to Output in High Z				15		20		25	ns

3827 PGM T11

$\overline{WE}$ Controlled Write Cycle

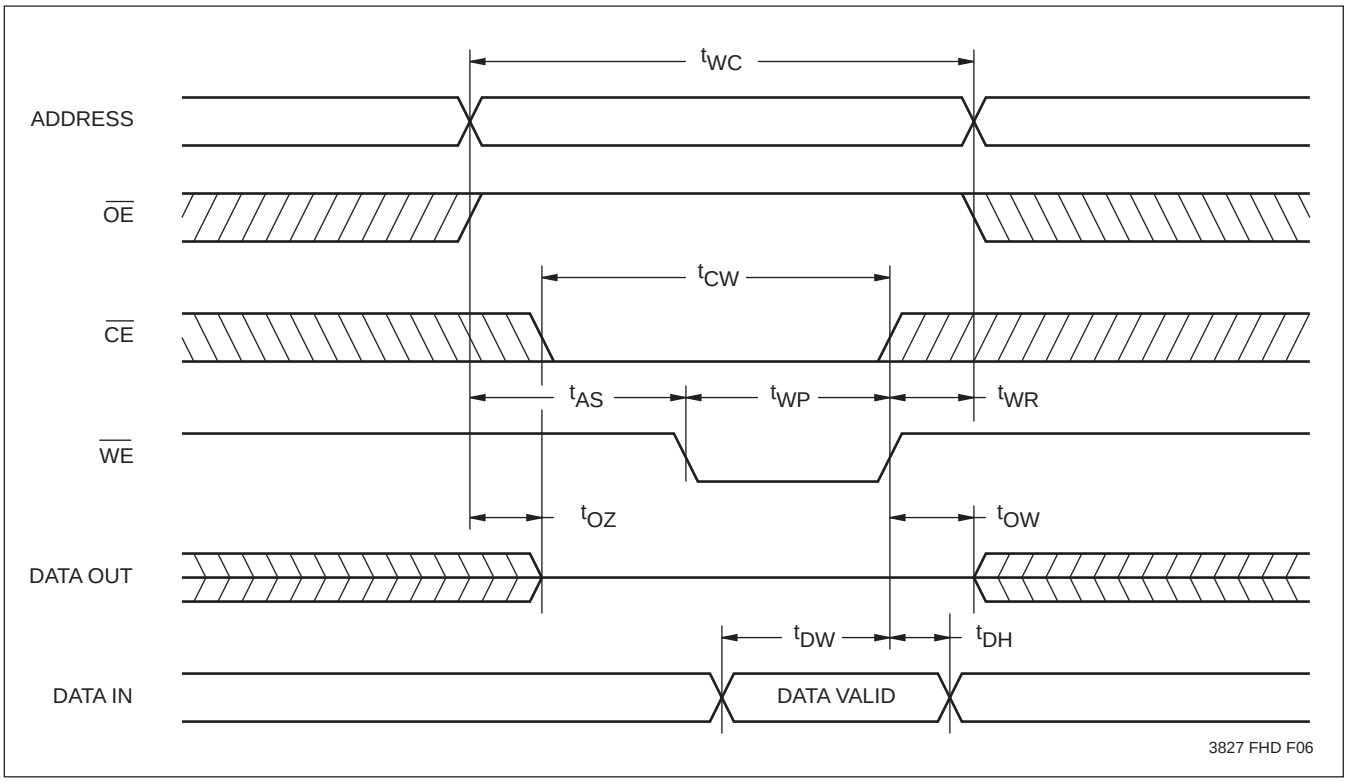

Note: (4) t_{WZ}, t_{OW} and t_{OZ} are periodically sampled and not 100% tested.

$\overline{CE}$ Controlled Write Cycle

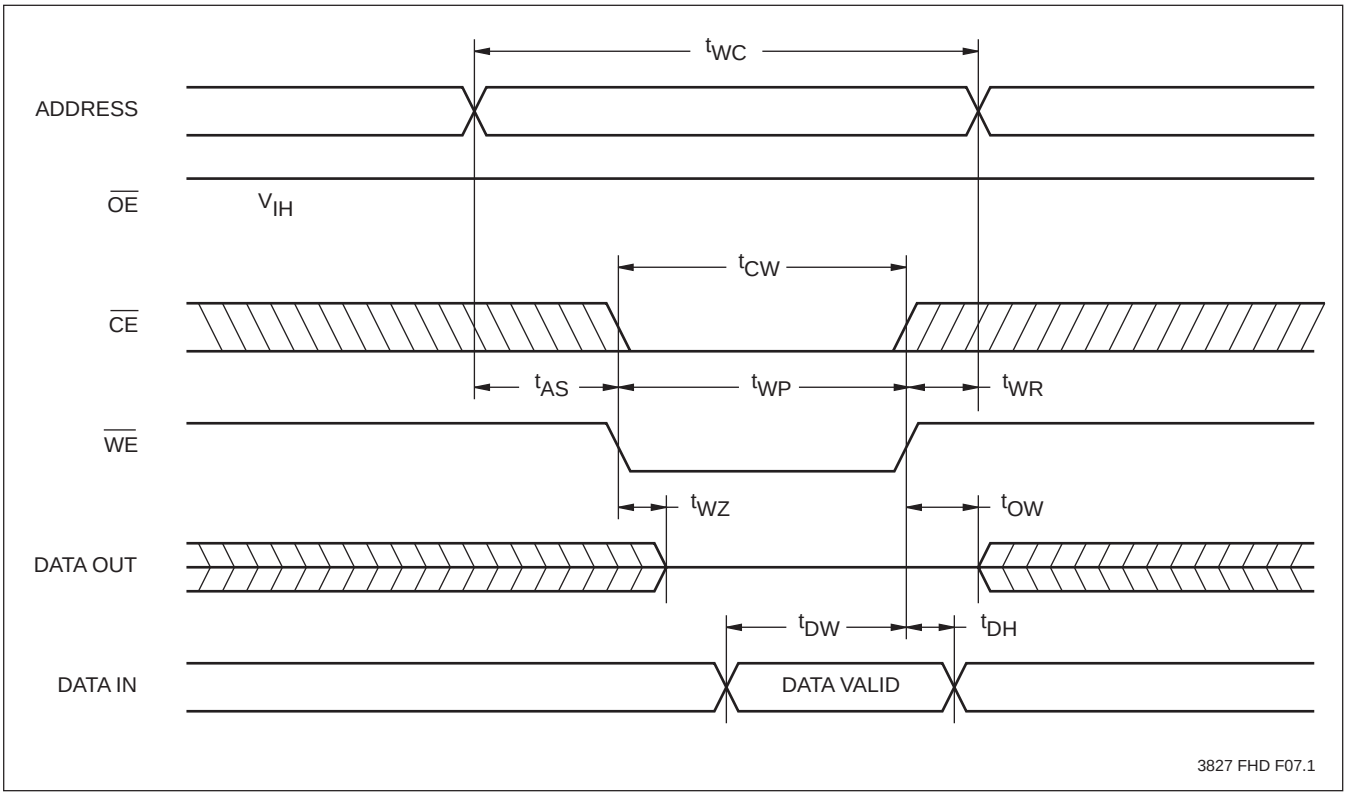

Array Recall Cycle Limits

Symbol	Parameter	X20C05-35		X20C05-45		X20C05-55		Units
		Min.	Max.	Min.	Max.	Min.	Max.	
t_{RCC}	Array Recall Cycle Time		5		5		5	µs
t_{RCP}(5)	Recall Pulse Width to Initiate Recall	30	1000	40	1000	50	1000	ns
t_{RWE}	$\overline{WE}$ Setup Time to $\overline{NE}$	0		0		0		ns

3827 PGM T13.1

Array Recall Cycle

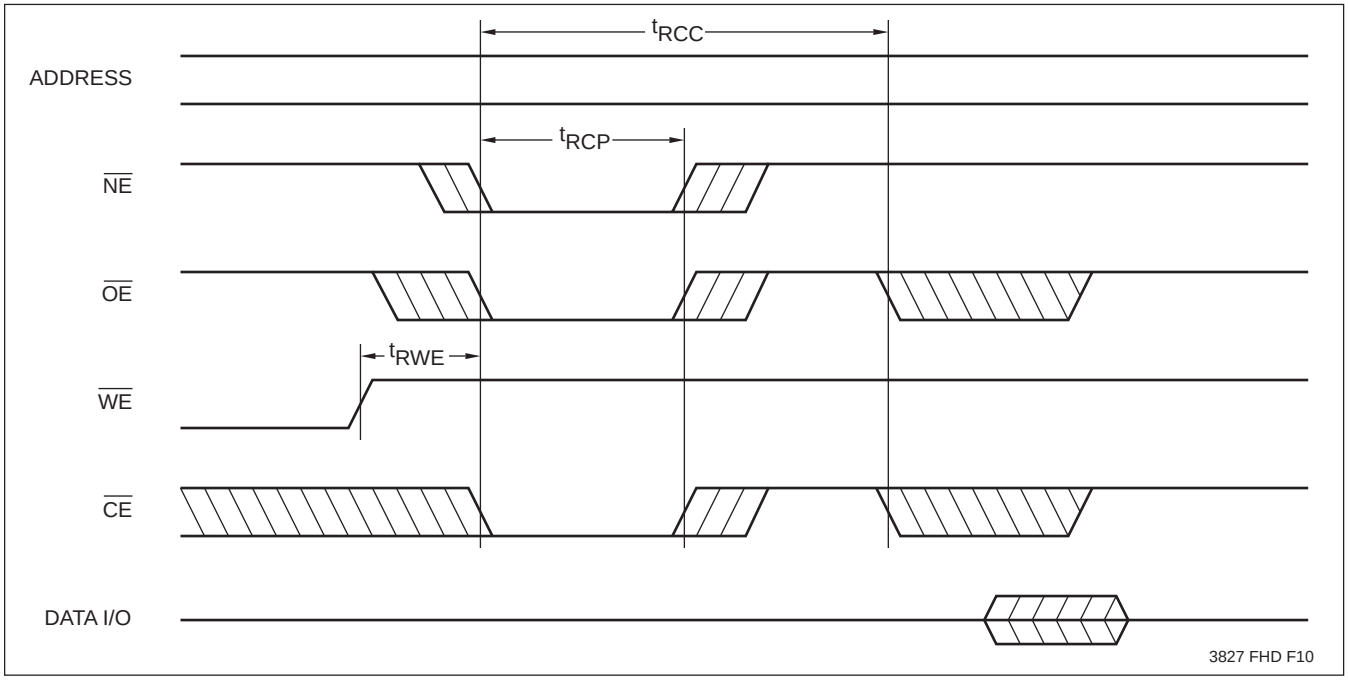

Note: (5) The Recall Pulse Width (t_{RCP}) is a minimum time that $\overline{NE}$, $\overline{OE}$ and $\overline{CE}$ must be LOW simultaneously to insure data integrity, $\overline{NE}$ and $\overline{CE}$.

Software Command Timing Limits

Symbol	Parameter	X20C05-35		X20C05-45		X20C05-55		Units
		Min.	Max.	Min.	Max.	Min.	Max.	
t_{STO}	Store Cycle Time		5		5		5	ms
t_{SP}(6)	Store Pulse Width	30		40		50		ns
t_{SPH}	Store Pulse Hold Time	35		45		55		ns
t_{WC}	Write Cycle Time	35		45		55		ns
t_{AS}	Address Setup Time	0		0		0		ns
t_{AH}	Address Hold time	0		0		0		ns
t_{DS}	Data Setup Time	15		20		25		ns
t_{DH}	Data Hold Time	0		3		3		ns
t_{SOE}(7)	$\overline{OE}$ Disable to Store Function	20		20		20		ns
t_{OEST}(7)	Output Enable from End of Store	10		10		10		ns
t_{NHZ}(7)	Nonvolatile Enable to Output in High Z		15		20		25	ns
t_{NES}	$\overline{NE}$ Setup Time	5		5		5		ns
t_{NEH}	$\overline{NE}$ Hold Time	5		5		5		ns

3827 PGM T12.1

$\overline{CE}$ Controlled Software Command Sequence

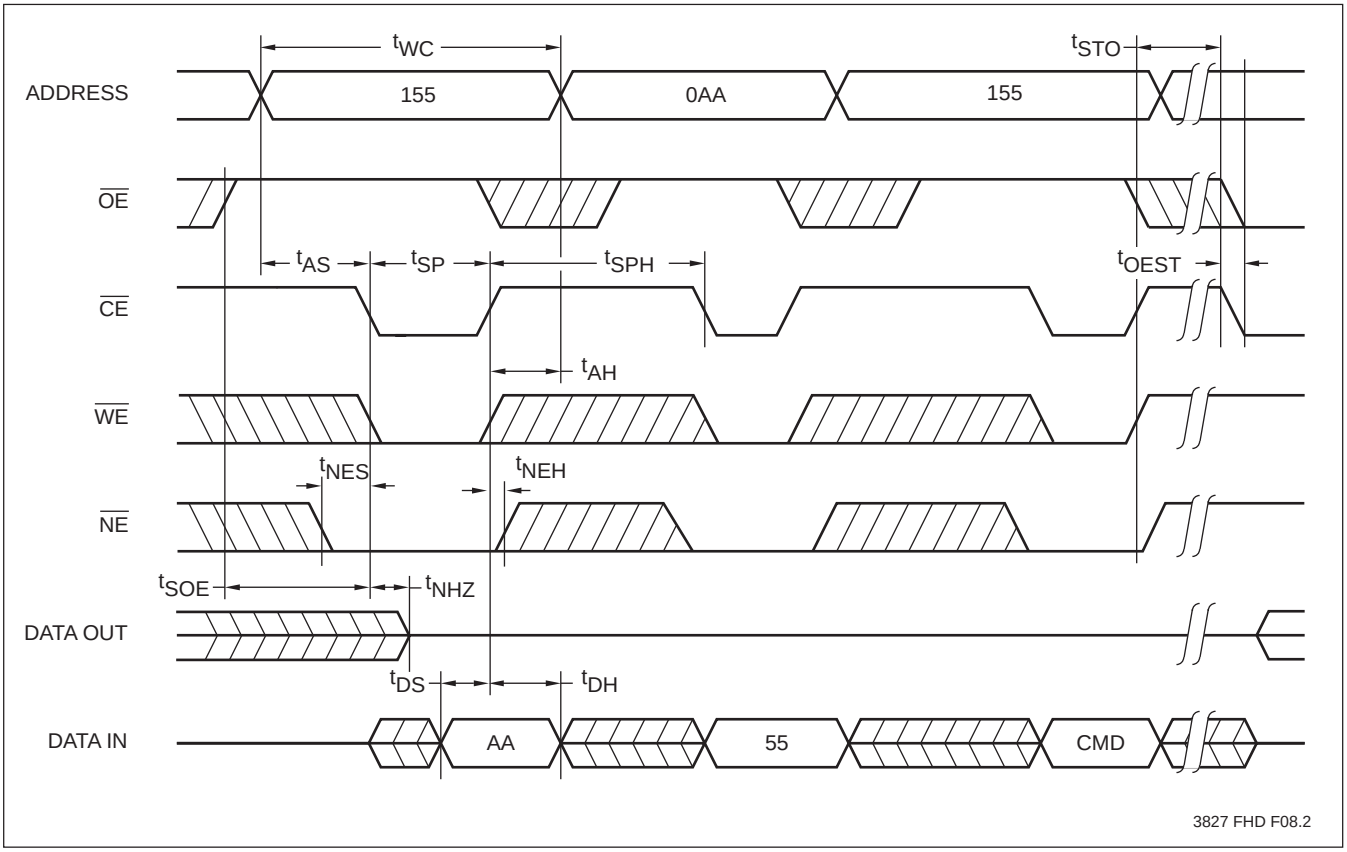

3827 FHD F08.2

Notes: (6) The Store Pulse Width (t_{SP}) is a minimum time that $\overline{NE}$, $\overline{WE}$ and $\overline{CE}$ must be LOW simultaneously.
(7) t_{SOE}, t_{OEST} and t_{NHZ} are periodically sampled and not 100% tested.

$\overline{WE}$ Controlled Software Command Sequence

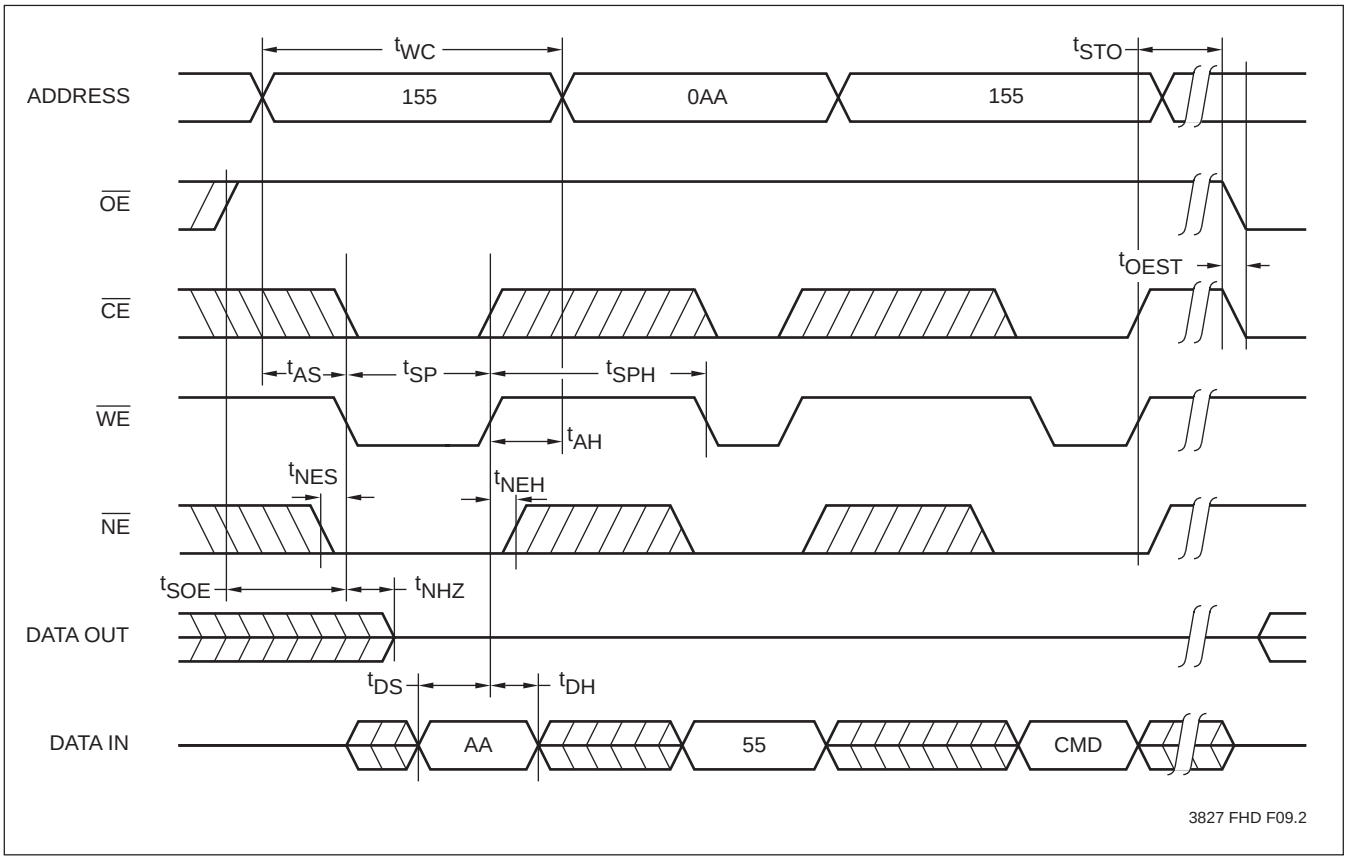

AUTOSTORE Feature

The AUTOSTORE feature automatically saves the contents of the X20C05's RAM to the on-board bit-for-bit shadow E²PROM at power-down. This circuitry insures that no data is lost during accidental power-downs or general system crashes, and is ideal for microprocessor caching systems, embedded software systems, and general system back-up memory.

The AUTOSTORE instruction (EAS) to the SDP register sets the AUTOSTORE enable latch, allowing the X20C05 to automatically perform a store operation whenever V_{CC} falls below the AUTOSTORE threshold (V_{ASTH}). V_{CC} must remain above the AUTOSTORE Cycle End Voltage (V_{ASEND}) for the duration of the store cycle (t_{ASTO}). The detailed timing for this feature is illustrated in the AUTOSTORE timing diagram, below. Once the AUTOSTORE cycle is initiated, all other device functions are inhibited.

AUTOSTORE CYCLE Timing Diagrams

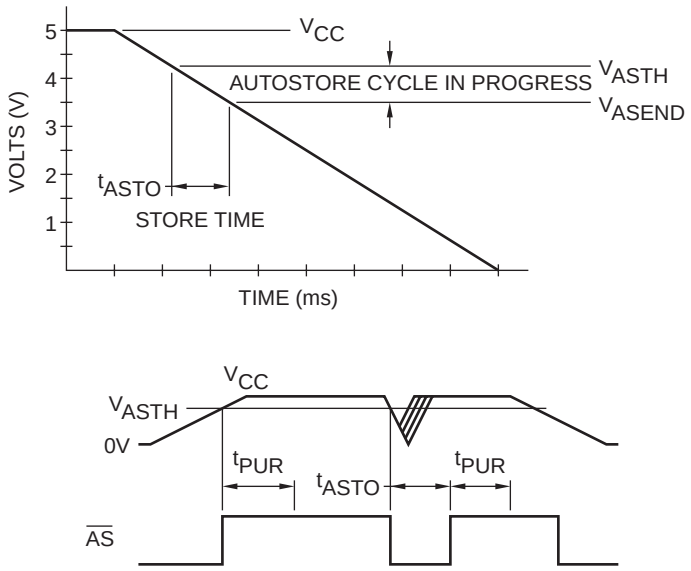

3827 FHD F14

AUTOSTORE CYCLE LIMITS

Symbol	Parameter	X20C05 Min.	X20C05 Max.	Units
t_{ASTO}	AUTOSTORE Cycle Time		2.5	ms
V_{ASTH}	AUTOSTORE Threshold Voltage	4.0	4.3	V
V_{ASEND}	AUTOSTORE Cycle End Voltage	3.5		V

3827 PGM T15

SDP (Software Data Protection)

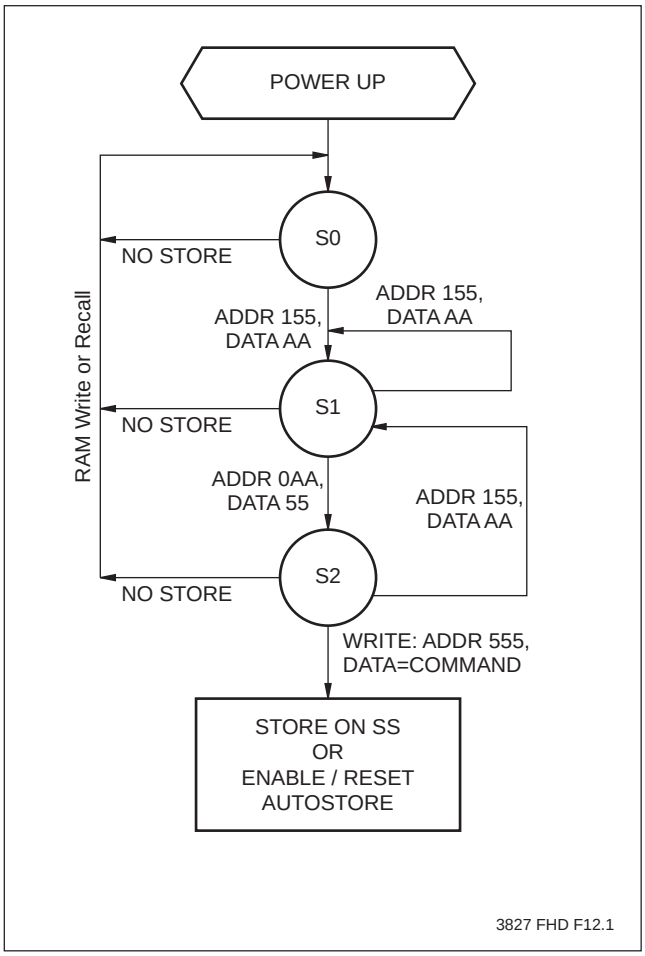

Store State Diagram

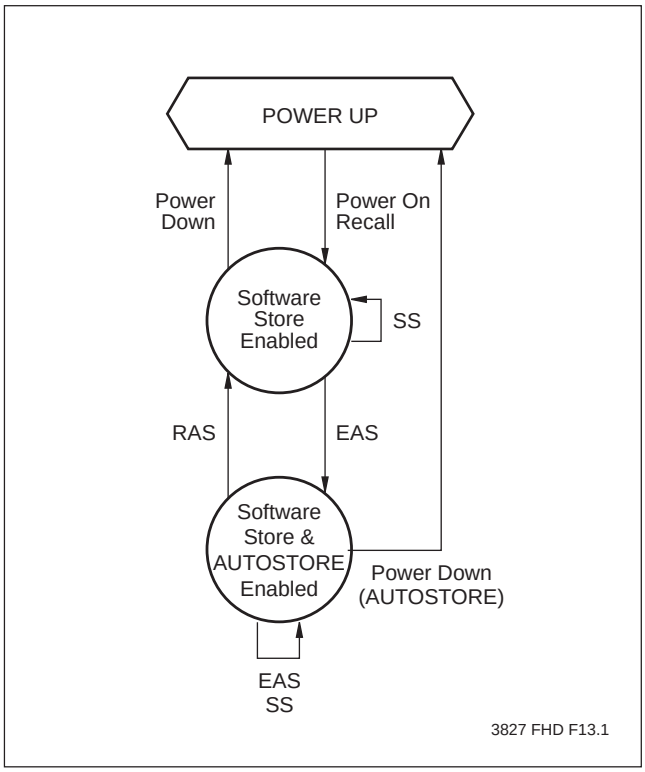

SOFTWARE DATA PROTECTION COMMANDS

Command		Data
EAS	Enable AUTOSTORE	CC[H]
RAS	Reset AUTOSTORE	CD[H]
SS	Software Store	33[H]

3827 PGM T14.1

NOTES

PACKAGING INFORMATION

28-LEAD HERMETIC DUAL IN-LINE PACKAGE TYPE D

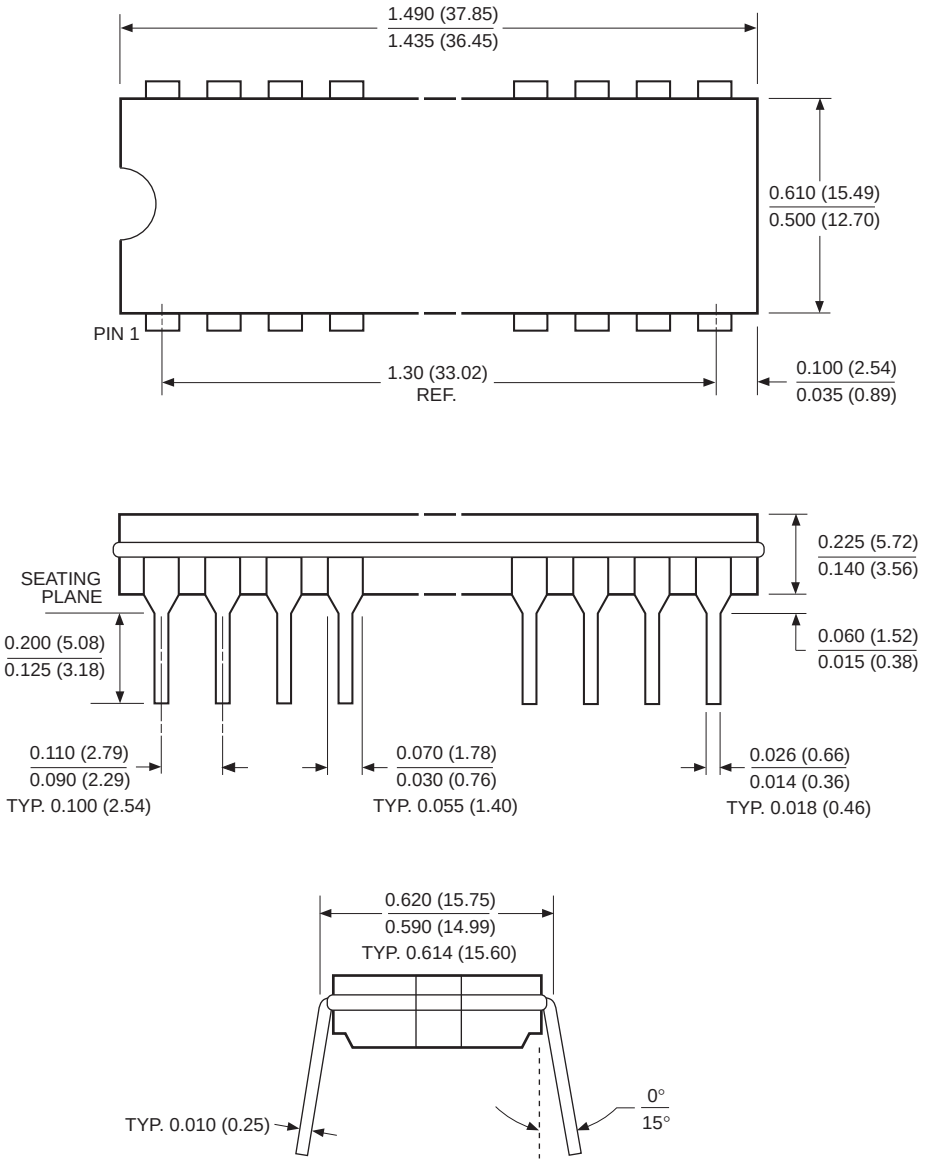

NOTE: ALL DIMENSIONS IN INCHES (IN PARENTHESES IN MILLIMETERS)

PACKAGING INFORMATION

28-LEAD PLASTIC DUAL IN-LINE PACKAGE TYPE P

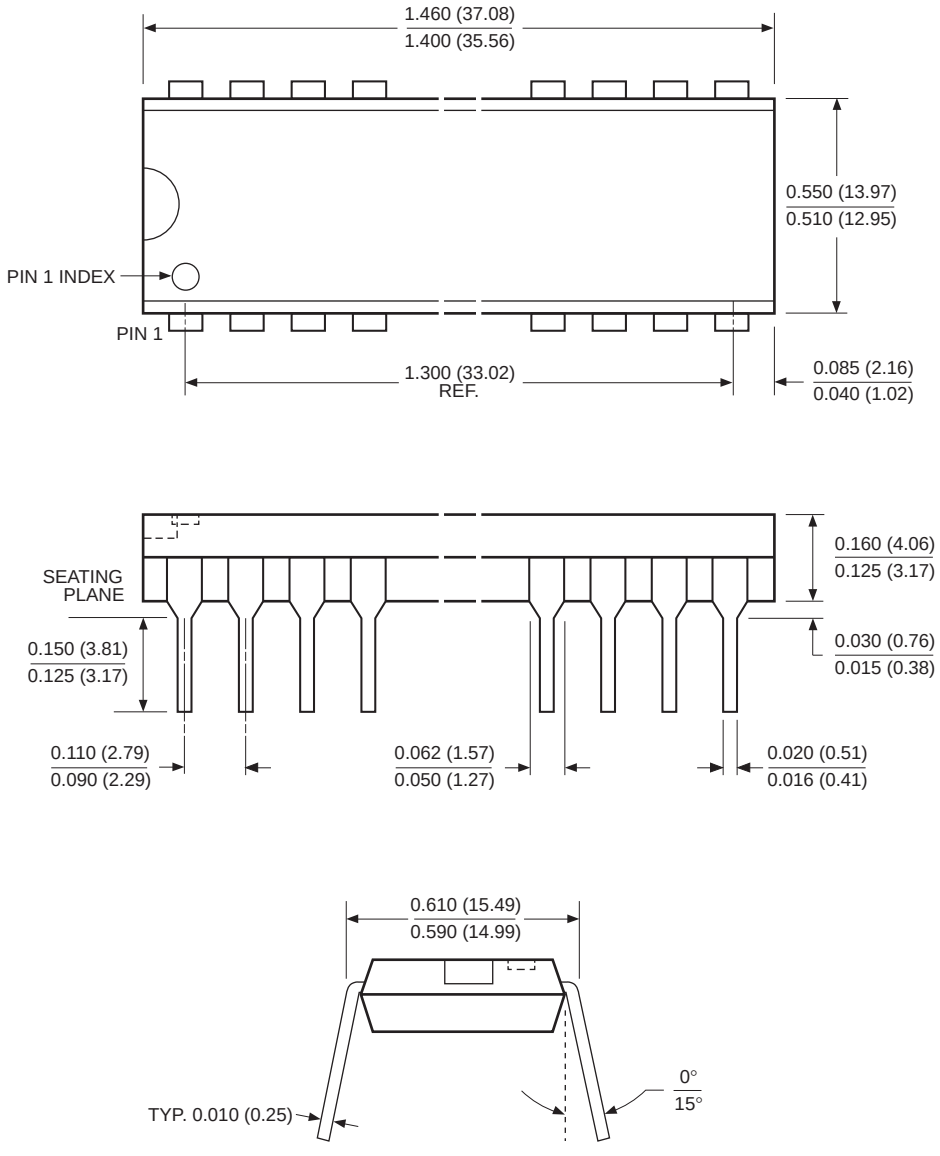

NOTE: ALL DIMENSIONS IN INCHES (IN PARENTHESES IN MILLIMETERS)

PACKAGING INFORMATION

32-PAD CERAMIC LEADLESS CHIP CARRIER PACKAGE TYPE E

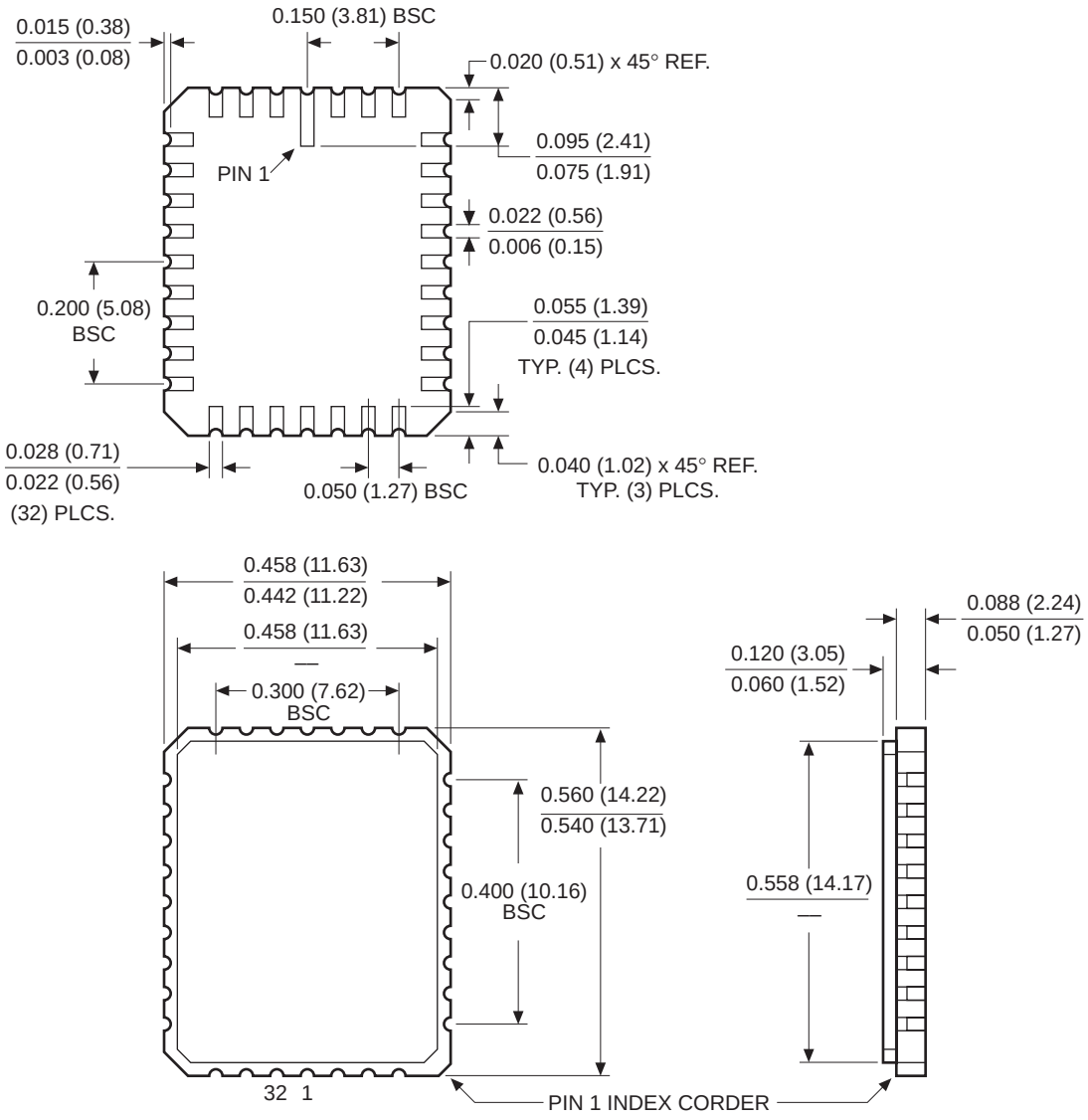

NOTE:
1. **ALL DIMENSIONS IN INCHES (IN PARENTHESES IN MILLIMETERS)**
2. **TOLERANCE: ±1% NTL ±0.005 (0.127)**

PACKAGING INFORMATION

32-LEAD PLASTIC LEADED CHIP CARRIER PACKAGE TYPE J

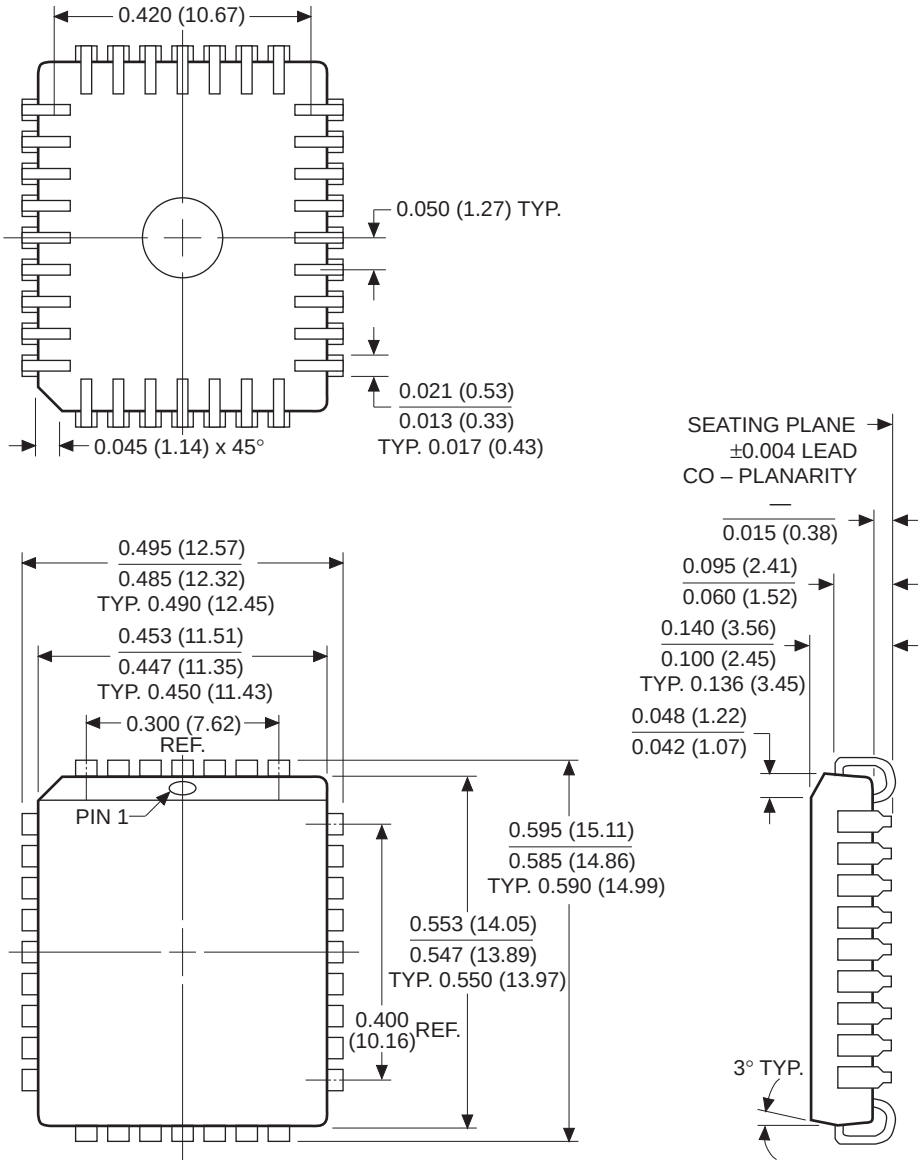

NOTES:
1. **ALL DIMENSIONS IN INCHES (IN PARENTHESES IN MILLIMETERS)**
2. **DIMENSIONS WITH NO TOLERANCE FOR REFERENCE ONLY**

ORDERING INFORMATION

X20C05 X X -X

Device

Access Time
–35 = 35ns
–45 = 45ns
–55 = 55ns

Temperature Range
Blank = Commercial = 0°C to +70°C
I = Industrial = –40°C to +85°C
M = Military = –55°C to +125°C

Package
D = 28-Lead Cerdip
P = 28 Lead Plastic DIP
E = 32-Pad Ceramic LCC
J = 32-Lead PLCC

LIMITED WARRANTY
Devices sold by Xicor, Inc. are covered by the warranty and patent indemnification provisions appearing in its Terms of Sale only. Xicor, Inc. makes no warranty, express, statutory, implied, or by description regarding the information set forth herein or regarding the freedom of the described devices from patent infringement. Xicor, Inc. makes no warranty of merchantability or fitness tor any purpose. Xicor, Inc. reserves the right to discontinue production and change specifications and prices at any time and without notice.

Xicor, Inc. assumes no responsibility for the use of any circuitry other than circuitry embodied in a Xicor, Inc. product. No other circuits, patents, licenses are implied.

US. PATENTS
Xicor products are covered by one or more of the following U.S. Patents: 4,263,664; 4,274,012; 4,300,212; 4,314,265; 4,326,134; 4,393,481; 4,404,475; 4,450,402; 4,486,769; 4,488,060; 4,520,461; 4,533,846; 4,599,706; 4,617,652; 4,668,932; 4,752,912; 4,829,482; 4,874,967; 4,883,976. Foreign patents and additional patents pending.

LIFE RELATED POLICY
In situations where semiconductor component failure may endanger life, system designers using this product should design the system with appropriate error detection and correction, redundancy and back-up features to prevent such an occurrence.

Xicor's products are not authorized for use as critical components in life support devices or systems.
1. Life support devices or systems are devices or systems which, (a) are intended for surgical implant into the body, or (b) support or sustain life, and whose failure to perform, when properly used in accordance with instructions for use provided in the labeling, can be reasonably expected to result in a significant injury to the user.
2. A critical component is any component of a life support device or system whose failure to perform can be reasonably expected to cause the failure of the life support device or system, or to affect its satety or effectiveness.

Мы молодая и активно развивающаяся компания в области поставок электронных компонентов. Мы поставляем электронные компоненты отечественного и импортного производства напрямую от производителей и с крупнейших складов мира.

Благодаря сотрудничеству с мировыми поставщиками мы осуществляем комплексные и плановые поставки широчайшего спектра электронных компонентов.

Собственная эффективная логистика и склад в обеспечивает надежную поставку продукции в точно указанные сроки по всей России.

Мы осуществляем техническую поддержку нашим клиентам и предпродажную проверку качества продукции. На все поставляемые продукты мы предоставляем гарантию .

Осуществляем поставки продукции под контролем ВП МО РФ на предприятия военно-промышленного комплекса России , а также работаем в рамках 275 ФЗ с открытием отдельных счетов в уполномоченном банке. Система менеджмента качества компании соответствует требованиям ГОСТ ISO 9001.

Минимальные сроки поставки, гибкие цены, неограниченный ассортимент и индивидуальный подход к клиентам являются основой для выстраивания долгосрочного и эффективного сотрудничества с предприятиями радиоэлектронной промышленности, предприятиями ВПК и научно-исследовательскими институтами России.

С нами вы становитесь еще успешнее!

Наши контакты:

Телефон: +7 812 627 14 35

Электронная почта: sales@st-electron.ru

Адрес: 198099, Санкт-Петербург, Промышленная ул, дом № 19, литера Н, помещение 100-Н Офис 331