Cree® XLamp® XM-L EasyWhite™ LEDs

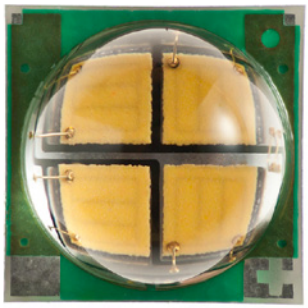

PRODUCT DESCRIPTION

The XLamp XM-L EasyWhite LED eliminates chromaticity binning, and enables luminaire and bulb manufacturers to deliver the consistent color and high efficacy light output of a multi-die LED in the compact XM-L footprint. XLamp XM-L EasyWhite LEDs can reduce LED-to-LED color variation to within a 2-step MacAdam ellipse, 94% smaller than the total area of the corresponding ANSI C78.377 color region.

The XLamp XM-L EasyWhite LED is the perfect choice for lighting applications where moderate to high luminous flux output is required from a single, small point source. Example applications include: LED retrofit bulbs, commercial/retail display spotlights, and other indoor general-illumination applications.

FEATURES

- Available in 4-step and 2-step EasyWhite bins at 2700 K, 3000 K, 3500 K, 4000 K, 5000 K CCT
- Wide range of operating current – up to 2 A @ 6 V
- 85 °C binning and characterization
- Available in 6-V and 12-V versions
- Low thermal resistance: 2.5 °C/W
- Wide viewing angle: 115°
- Wide variety of CRI choices: standard CRI as well as 80-, 85-, 90-minimum CRI
- Electrically neutral thermal path
- Unlimited floor life at ≤ 30 ºC/85% RH
- Reflow solderable - JEDEC J-STD-020C
- RoHS-compliant
- UL-recognized component (E349212)

TABLE OF CONTENTS

Product Characteristics 2
Flux Characteristics, Standard Order Codes and Bins, 6-Volt XM-L EZW .. 3
Flux Characteristics, Standard Order Codes and Bins, 12-Volt XM-L EZW 6
Relative Spectral Power Distribution..... 9
Relative Flux vs. Junction Temperature 9
Electrical Characteristics 10
Relative Flux vs. Current 11
Relative Chromaticity vs. Current and Temperature 12
Typical Spatial Distribution 13
Thermal Design 13
Performance Groups – Brightness .14
Performance Groups – Chromaticity 15
Cree EasyWhite Bins Plotted on the 1931 CIE Color Space 16
Cree ANSI White Bins Plotted on the 1931 CIE Color Space 16
Bin and Order Code Format.....17
Reflow Soldering Characteristics ...18
Notes.....19
Mechanical Dimensions.....20
Tape and Reel 21
Packaging.....22

Copyright © 2011-2013 Cree, Inc. All rights reserved. The information in this document is subject to change without notice.
Cree®, the Cree logo and XLamp® are registered trademarks and EasyWhite™ is a trademark of Cree, Inc.

Cree, Inc.
4600 Silicon Drive
Durham, NC 27703
USA Tel: +1.919.313.5300

PRODUCT CHARACTERISTICS

Characteristics	Unit	Minimum	Typical	Maximum
Thermal Resistance, junction to solder point	°C/W		2.5	
Viewing Angle (FWHM)	degrees		115	
Temperature coefficient of voltage (6 V)	mV/°C		-6.0	
Temperature coefficient of voltage (12 V)	mV/°C		-12.0	
ESD Classification (HBM per Mil-Std-883D)			Class 2	
DC Forward Current (6 V)	mA			2000
DC Forward Current (12 V)	mA			1000
Reverse Current (6 V, 12 V)	mA			-0.1
Forward Voltage (@ 700 mA, 85 °C, 6 V)	V		5.7	7.0
Forward Voltage (@ 350 mA, 85 °C, 12 V)	V		11.5	14.0
LED junction temperature	°C			150

Copyright © 2011-2013 Cree, Inc. All rights reserved. The information in this document is subject to change without notice. Cree®, the Cree logo and XLamp® are registered trademarks and EasyWhite™ is a trademark of Cree, Inc.

FLUX CHARACTERISTICS, STANDARD ORDER CODES AND BINS, 6-VOLT XM-L EZW (700 mA, T_J = 85 °C)

The following table provides the order codes for 6-Volt XLamp XM-L EZW LEDs.

Color	CCT Range	Base Order Codes Min. Luminous Flux @ 700 mA			2-Step Order Code		4-Step Order Code	
		Group	Flux (lm) @ 85 °C	Flux (lm) @ 25 °C*	Chromaticity Region		Chromaticity Region	
Standard CRI EasyWhite	5000 K	U4	340	404	50H	XMLEZW-00-0000-0B00U450H	50F	XMLEZW-00-0000-0B00U450F
		U5	360	427		XMLEZW-00-0000-0B00U550H		XMLEZW-00-0000-0B00U550F
		U6	380	451		XMLEZW-00-0000-0B00U650H		XMLEZW-00-0000-0B00U650F
		V2	400	475		XMLEZW-00-0000-0B00V250H		XMLEZW-00-0000-0B00V250F
	4000 K	U2	300	356	40H	XMLEZW-00-0000-0B00U240H	40F	XMLEZW-00-0000-0B00U240F
		U3	320	380		XMLEZW-00-0000-0B00U340H		XMLEZW-00-0000-0B00U340F
		U4	340	404		XMLEZW-00-0000-0B00U440H		XMLEZW-00-0000-0B00U440F
	3500 K	T6	280	332	35H	XMLEZW-00-0000-0B00T635H	35F	XMLEZW-00-0000-0B00T635F
		U2	300	356		XMLEZW-00-0000-0B00U235H		XMLEZW-00-0000-0B00U235F
		U3	320	380		XMLEZW-00-0000-0B00U335H		XMLEZW-00-0000-0B00U335F
	3000 K	T5	260	309	30H	XMLEZW-00-0000-0B00T530H	30F	XMLEZW-00-0000-0B00T530F
		T6	280	332		XMLEZW-00-0000-0B00T630H		XMLEZW-00-0000-0B00T630F
		U2	300	356		XMLEZW-00-0000-0B00U230H		XMLEZW-00-0000-0B00U230F
		U3	320	380		XMLEZW-00-0000-0B00U330H		XMLEZW-00-0000-0B00U330F
	2700 K	T4	240	285	27H	XMLEZW-00-0000-0B00T427H	27F	XMLEZW-00-0000-0B00T427F
		T5	260	309		XMLEZW-00-0000-0B00T527H		XMLEZW-00-0000-0B00T527F
		T6	280	332		XMLEZW-00-0000-0B00T627H		XMLEZW-00-0000-0B00T627F
		U2	300	356		XMLEZW-00-0000-0B00U227H		XMLEZW-00-0000-0B00U227F

Notes:

- For Standard CRI parts, typical CRI is 80 for 4000–3500-K CCT parts and typical CRI is 82 for 3000–2700-K CCT.
- Cree maintains a tolerance of ±7% on flux and power measurements, ±0.005 on chromaticity (CCx, CCy) measurements and ±2 on CRI measurements.

* Flux values @ 25 °C are calculated and for reference only.

Copyright © 2011-2013 Cree, Inc. All rights reserved. The information in this document is subject to change without notice. Cree®, the Cree logo and XLamp® are registered trademarks and EasyWhite™ is a trademark of Cree, Inc.

FLUX CHARACTERISTICS, STANDARD ORDER CODES AND BINS, 6-VOLT XM-L EZW (700 mA, T_J = 85 °C) - CONTINUED

Color	CCT Range	Base Order Codes Min. Luminous Flux @ 700 mA			2-Step Order Code		4-Step Order Code	
		Group	Flux (lm) @ 85 °C	Flux (lm) @ 25 °C*	Chromaticity Region		Chromaticity Region	
80-CRI Minimum EasyWhite	4000 K	U2	300	356	40H	XMLEZW-00-0000-0B0HU240H	40F	XMLEZW-00-0000-0B0HU240F
		U3	320	380		XMLEZW-00-0000-0B0HU340H		XMLEZW-00-0000-0B0HU340F
		U4	340	404		XMLEZW-00-0000-0B0HU440H		XMLEZW-00-0000-0B0HU440F
	3500 K	T5	260	309	35H	XMLEZW-00-0000-0B0HT535H	35F	XMLEZW-00-0000-0B0HT535F
		T6	280	332		XMLEZW-00-0000-0B0HT635H		XMLEZW-00-0000-0B0HT635F
		U2	300	356		XMLEZW-00-0000-0B0HU235H		XMLEZW-00-0000-0B0HU235F
		U3	320	380		XMLEZW-00-0000-0B0HU335H		XMLEZW-00-0000-0B0HU335F
	3000 K	T5	260	309	30H	XMLEZW-00-0000-0B0HT530H	30F	XMLEZW-00-0000-0B0HT530F
		T6	280	332		XMLEZW-00-0000-0B0HT630H		XMLEZW-00-0000-0B0HT630F
		U2	300	356		XMLEZW-00-0000-0B0HU230H		XMLEZW-00-0000-0B0HU230F
		U3	320	380		XMLEZW-00-0000-0B0HU330H		XMLEZW-00-0000-0B0HU330F
	2700 K	T4	240	285	27H	XMLEZW-00-0000-0B0HT427H	27F	XMLEZW-00-0000-0B0HT427F
		T5	260	309		XMLEZW-00-0000-0B0HT527H		XMLEZW-00-0000-0B0HT527F
		T6	280	332		XMLEZW-00-0000-0B0HT627H		XMLEZW-00-0000-0B0HT627F
		U2	300	356		XMLEZW-00-0000-0B0HU227H		XMLEZW-00-0000-0B0HU227F
85-CRI Minimum EasyWhite	3000 K	T3	220	261	30H	XMLEZW-00-0000-0B0PT330H	30F	XMLEZW-00-0000-0B0PT330F
		T4	240	285		XMLEZW-00-0000-0B0PT430H		XMLEZW-00-0000-0B0PT430F
		T5	260	309		XMLEZW-00-0000-0B0PT530H		XMLEZW-00-0000-0B0PT530F
		T6	280	332		XMLEZW-00-0000-0B0PT630H		XMLEZW-00-0000-0B0PT630F
	2700 K	T2	200	237	27H	XMLEZW-00-0000-0B0PT227H	27F	XMLEZW-00-0000-0B0PT227F
		T3	220	261		XMLEZW-00-0000-0B0PT327H		XMLEZW-00-0000-0B0PT327F
		T4	240	285		XMLEZW-00-0000-0B0PT427H		XMLEZW-00-0000-0B0PT427F
		T5	260	309		XMLEZW-00-0000-0B0PT527H		XMLEZW-00-0000-0B0PT527F

Notes:
- For Standard CRI parts, typical CRI is 80 for 4000–3500-K CCT parts and typical CRI is 82 for 3000–2700-K CCT.
- Cree maintains a tolerance of ±7% on flux and power measurements, ±0.005 on chromaticity (CCx, CCy) measurements and ±2 on CRI measurements.

* Flux values @ 25 °C are calculated and for reference only.

Copyright © 2011-2013 Cree, Inc. All rights reserved. The information in this document is subject to change without notice. Cree®, the Cree logo and XLamp® are registered trademarks and EasyWhite™ is a trademark of Cree, Inc.

FLUX CHARACTERISTICS, STANDARD ORDER CODES AND BINS, 6-VOLT XM-L EZW (700 mA, T_J = 85 °C) - CONTINUED

Color	CCT Range	Base Order Codes Min. Luminous Flux @ 700 mA			2-Step Order Code		4-Step Order Code	
		Group	Flux (lm) @ 85 °C	Flux (lm) @ 25 °C*	Chromaticity Region		Chromaticity Region	
90-CRI Minimum EasyWhite	3000 K	T2	200	237	30H	XMLEZW-00-0000-0B0UT230H	30F	XMLEZW-00-0000-0B0UT230F
		T3	220	261		XMLEZW-00-0000-0B0UT330H		XMLEZW-00-0000-0B0UT330F
		T4	240	285		XMLEZW-00-0000-0B0UT430H		XMLEZW-00-0000-0B0UT430F
		T5	260	309		XMLEZW-00-0000-0B0UT530H		XMLEZW-00-0000-0B0UT530F
	2700 K	S6	180	214	27H	XMLEZW-00-0000-0B0US627H	27F	XMLEZW-00-0000-0B0US627F
		T2	200	237		XMLEZW-00-0000-0B0UT227H		XMLEZW-00-0000-0B0UT227F
		T3	220	261		XMLEZW-00-0000-0B0UT327H		XMLEZW-00-0000-0B0UT327F
		T4	240	285		XMLEZW-00-0000-0B0UT427H		XMLEZW-00-0000-0B0UT427F

Color	CCT Range	Base Order Codes Min Luminous Flux @ 700 mA			Chromaticity Regions	Order Code
		Group	Flux (lm) @ 85 °C	Flux (lm) @ 25 °C*		
ANSI White	5000 K	U4	340	404	0E3	XMLEZW-00-0000-0B00U40E3
		U5	360	427		XMLEZW-00-0000-0B00U50E3
		U6	380	451		XMLEZW-00-0000-0B00U60E3
		V2	400	475		XMLEZW-00-0000-0B00V20E3

Notes:

- For Standard CRI parts, typical CRI is 80 for 4000–3500-K CCT parts and typical CRI is 82 for 3000–2700-K CCT.
- Cree maintains a tolerance of ±7% on flux and power measurements, ±0.005 on chromaticity (CCx, CCy) measurements and ±2 on CRI measurements.

* Flux values @ 25 °C are calculated and for reference only.

Copyright © 2011-2013 Cree, Inc. All rights reserved. The information in this document is subject to change without notice. Cree®, the Cree logo and XLamp® are registered trademarks and EasyWhite™ is a trademark of Cree, Inc.

FLUX CHARACTERISTICS, STANDARD ORDER CODES AND BINS, 12-VOLT XM-L EZW (350 mA, T_J = 85 °C)

The following table provides the order codes for 12-Volt XLamp XM-L EZW LEDs.

Color	CCT Range	Base Order Codes Min. Luminous Flux @ 350 mA			2-Step Order Code		4-Step Order Code	
		Group	Flux (lm) @ 85 °C	Flux (lm) @ 25 °C*	Chromaticity Region		Chromaticity Region	
Standard CRI EasyWhite	5000 K	U4	340	404	50H	XMLEZW-00-0000-0D00U450H	50F	XMLEZW-00-0000-0D00U450F
		U5	360	427		XMLEZW-00-0000-0D00U550H		XMLEZW-00-0000-0D00U550F
		U6	380	451		XMLEZW-00-0000-0D00U650H		XMLEZW-00-0000-0D00U650F
		V2	400	475		XMLEZW-00-0000-0D00V250H		XMLEZW-00-0000-0D00V250F
	4000 K	U2	300	356	40H	XMLEZW-00-0000-0D00U240H	40F	XMLEZW-00-0000-0D00U240F
		U3	320	380		XMLEZW-00-0000-0D00U340H		XMLEZW-00-0000-0D00U340F
		U4	340	404		XMLEZW-00-0000-0D00U440H		XMLEZW-00-0000-0D00U440F
	3500 K	T6	280	332	35H	XMLEZW-00-0000-0D00T635H	35F	XMLEZW-00-0000-0D00T635F
		U2	300	356		XMLEZW-00-0000-0D00U235H		XMLEZW-00-0000-0D00U235F
		U3	320	380		XMLEZW-00-0000-0D00U335H		XMLEZW-00-0000-0D00U335F
	3000 K	T5	260	309	30H	XMLEZW-00-0000-0D00T530H	30F	XMLEZW-00-0000-0D00T530F
		T6	280	332		XMLEZW-00-0000-0D00T630H		XMLEZW-00-0000-0D00T630F
		U2	300	356		XMLEZW-00-0000-0D00U230H		XMLEZW-00-0000-0D00U230F
		U3	320	380		XMLEZW-00-0000-0D00U330H		XMLEZW-00-0000-0D00U330F
	2700 K	T4	240	285	27H	XMLEZW-00-0000-0D00T427H	27F	XMLEZW-00-0000-0D00T427F
		T5	260	309		XMLEZW-00-0000-0D00T527H		XMLEZW-00-0000-0D00T527F
		T6	280	332		XMLEZW-00-0000-0D00T627H		XMLEZW-00-0000-0D00T627F
		U2	300	356		XMLEZW-00-0000-0D00U227H		XMLEZW-00-0000-0D00U227F

Notes:
- For Standard CRI parts, typical CRI is 80 for 4000–3500-K CCT parts and typical CRI is 82 for 3000–2700-K CCT.
- Cree maintains a tolerance of ±7% on flux and power measurements, ±0.005 on chromaticity (CCx, CCy) measurements and ±2 on CRI measurements.

* Flux values @ 25 °C are calculated and for reference only.

Copyright © 2011-2013 Cree, Inc. All rights reserved. The information in this document is subject to change without notice. Cree®, the Cree logo and XLamp® are registered trademarks and EasyWhite™ is a trademark of Cree, Inc.

FLUX CHARACTERISTICS, STANDARD ORDER CODES AND BINS, 12-VOLT XM-L EZW (350 mA, T_J = 85 °C) - CONTINUED

Color	CCT Range	Base Order Codes Min. Luminous Flux @ 350 mA			2-Step Order Code		4-Step Order Code	
		Group	Flux (lm) @ 85 °C	Flux (lm) @ 25 °C*	Chromaticity Region		Chromaticity Region	
80-CRI Minimum EasyWhite	4000 K	U2	300	356	40H	XMLEZW-00-0000-0D0HU240H	40F	XMLEZW-00-0000-0D0HU240F
		U3	320	380		XMLEZW-00-0000-0D0HU340H		XMLEZW-00-0000-0D0HU340F
		U4	340	404		XMLEZW-00-0000-0D0HU440H		XMLEZW-00-0000-0D0HU440F
	3500 K	T5	260	309	35H	XMLEZW-00-0000-0D0HT535H	35F	XMLEZW-00-0000-0D0HT535F
		T6	280	332		XMLEZW-00-0000-0D0HT635H		XMLEZW-00-0000-0D0HT635F
		U2	300	356		XMLEZW-00-0000-0D0HU235H		XMLEZW-00-0000-0D0HU235F
		U3	320	380		XMLEZW-00-0000-0D0HU335H		XMLEZW-00-0000-0D0HU335F
	3000 K	T5	260	309	30H	XMLEZW-00-0000-0D0HT530H	30F	XMLEZW-00-0000-0D0HT530F
		T6	280	332		XMLEZW-00-0000-0D0HT630H		XMLEZW-00-0000-0D0HT630F
		U2	300	356		XMLEZW-00-0000-0D0HU230H		XMLEZW-00-0000-0D0HU230F
		U3	320	380		XMLEZW-00-0000-0D0HU330H		XMLEZW-00-0000-0D0HU330F
	2700 K	T4	240	285	27H	XMLEZW-00-0000-0D0HT427H	27F	XMLEZW-00-0000-0D0HT427F
		T5	260	309		XMLEZW-00-0000-0D0HT527H		XMLEZW-00-0000-0D0HT527F
		T6	280	332		XMLEZW-00-0000-0D0HT627H		XMLEZW-00-0000-0D0HT627F
		U2	300	356		XMLEZW-00-0000-0D0HU227H		XMLEZW-00-0000-0D0HU227F
85-CRI Minimum EasyWhite	3000 K	T3	220	261	30H	XMLEZW-00-0000-0D0PT330H	30F	XMLEZW-00-0000-0D0PT330F
		T4	240	285		XMLEZW-00-0000-0D0PT430H		XMLEZW-00-0000-0D0PT430F
		T5	260	309		XMLEZW-00-0000-0D0PT530H		XMLEZW-00-0000-0D0PT530F
		T6	280	332		XMLEZW-00-0000-0D0PT630H		XMLEZW-00-0000-0D0PT630F
	2700 K	T2	200	237	27H	XMLEZW-00-0000-0D0PT227H	27F	XMLEZW-00-0000-0D0PT227F
		T3	220	261		XMLEZW-00-0000-0D0PT327H		XMLEZW-00-0000-0D0PT327F
		T4	240	285		XMLEZW-00-0000-0D0PT427H		XMLEZW-00-0000-0D0PT427F
		T5	260	309		XMLEZW-00-0000-0D0PT527H		XMLEZW-00-0000-0D0PT527F

Notes:

- For Standard CRI parts, typical CRI is 80 for 4000–3500-K CCT parts and typical CRI is 82 for 3000–2700-K CCT.
- Cree maintains a tolerance of ±7% on flux and power measurements, ±0.005 on chromaticity (CCx, CCy) measurements and ±2 on CRI measurements.

* Flux values @ 25 °C are calculated and for reference only.

Copyright © 2011-2013 Cree, Inc. All rights reserved. The information in this document is subject to change without notice. Cree®, the Cree logo and XLamp® are registered trademarks and EasyWhite™ is a trademark of Cree, Inc.

FLUX CHARACTERISTICS, STANDARD ORDER CODES AND BINS, 12-VOLT XM-L EZW (350 mA, T_J = 85 °C) - CONTINUED

Color	CCT Range	Base Order Codes Min. Luminous Flux @ 350 mA			2-Step Order Code		4-Step Order Code	
		Group	Flux (lm) @ 85 °C	Flux (lm) @ 25 °C*	Chromaticity Region		Chromaticity Region	
90-CRI Minimum EasyWhite	3000 K	T2	200	237	30H	XMLEZW-00-0000-0D0UT230H	30F	XMLEZW-00-0000-0D0UT230F
		T3	220	261		XMLEZW-00-0000-0D0UT330H		XMLEZW-00-0000-0D0UT330F
		T4	240	285		XMLEZW-00-0000-0D0UT430H		XMLEZW-00-0000-0D0UT430F
		T5	260	309		XMLEZW-00-0000-0D0UT530H		XMLEZW-00-0000-0D0UT530F
	2700 K	S6	180	214	27H	XMLEZW-00-0000-0D0US627H	27F	XMLEZW-00-0000-0D0US627F
		T2	200	237		XMLEZW-00-0000-0D0UT227H		XMLEZW-00-0000-0D0UT227F
		T3	220	261		XMLEZW-00-0000-0D0UT327H		XMLEZW-00-0000-0D0UT327F
		T4	240	285		XMLEZW-00-0000-0D0UT427H		XMLEZW-00-0000-0D0UT427F

Color	CCT Range	Base Order Codes Min Luminous Flux @ 350 mA			Chromaticity Regions	Order Code
		Group	Flux (lm) @ 85 °C	Flux (lm) @ 25 °C*		
ANSI White	5000 K	U4	340	404	0E3	XMLEZW-00-0000-0D00U40E3
		U5	360	427		XMLEZW-00-0000-0D00U50E3
		U6	380	451		XMLEZW-00-0000-0D00U60E3
		V2	400	475		XMLEZW-00-0000-0D00V20E3

Notes:

- For Standard CRI parts, typical CRI is 80 for 4000–3500-K CCT parts and typical CRI is 82 for 3000–2700-K CCT.
- Cree maintains a tolerance of ±7% on flux and power measurements, ±0.005 on chromaticity (CCx, CCy) measurements and ±2 on CRI measurements.

* Flux values @ 25 °C are calculated and for reference only.

Copyright © 2011-2013 Cree, Inc. All rights reserved. The information in this document is subject to change without notice. Cree®, the Cree logo and XLamp® are registered trademarks and EasyWhite™ is a trademark of Cree, Inc.

RELATIVE SPECTRAL POWER DISTRIBUTION (3000-K CCT)

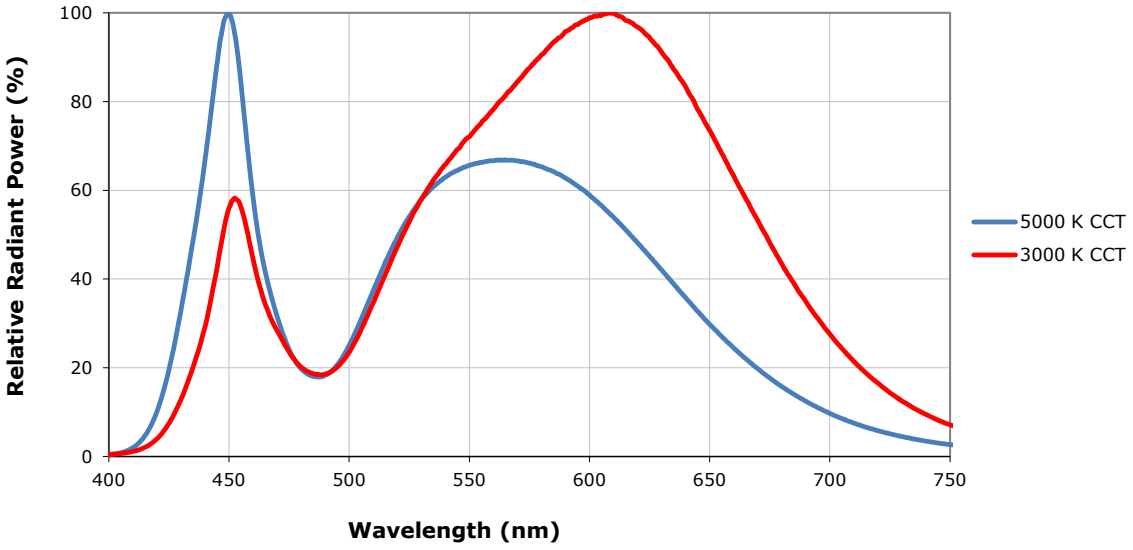

RELATIVE FLUX VS. JUNCTION TEMPERATURE (6-V - I_F = 700 mA; 12-V - I_F = 350 mA)

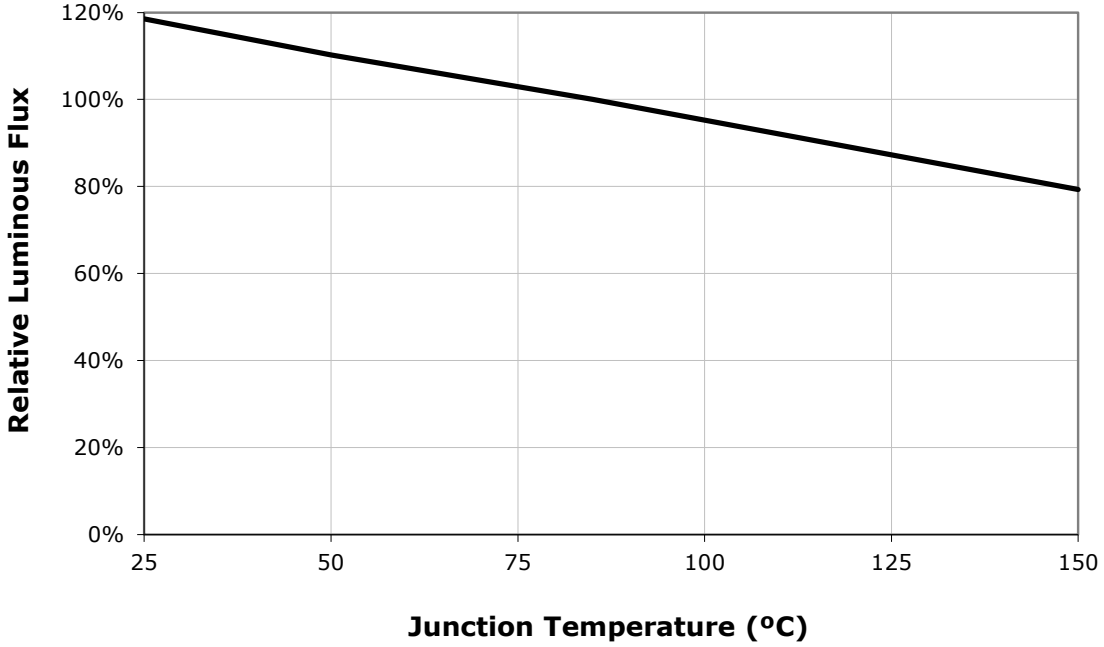

Copyright © 2011-2013 Cree, Inc. All rights reserved. The information in this document is subject to change without notice. Cree®, the Cree logo and XLamp® are registered trademarks and EasyWhite™ is a trademark of Cree, Inc.

ELECTRICAL CHARACTERISTICS (T_J = 85 °C)

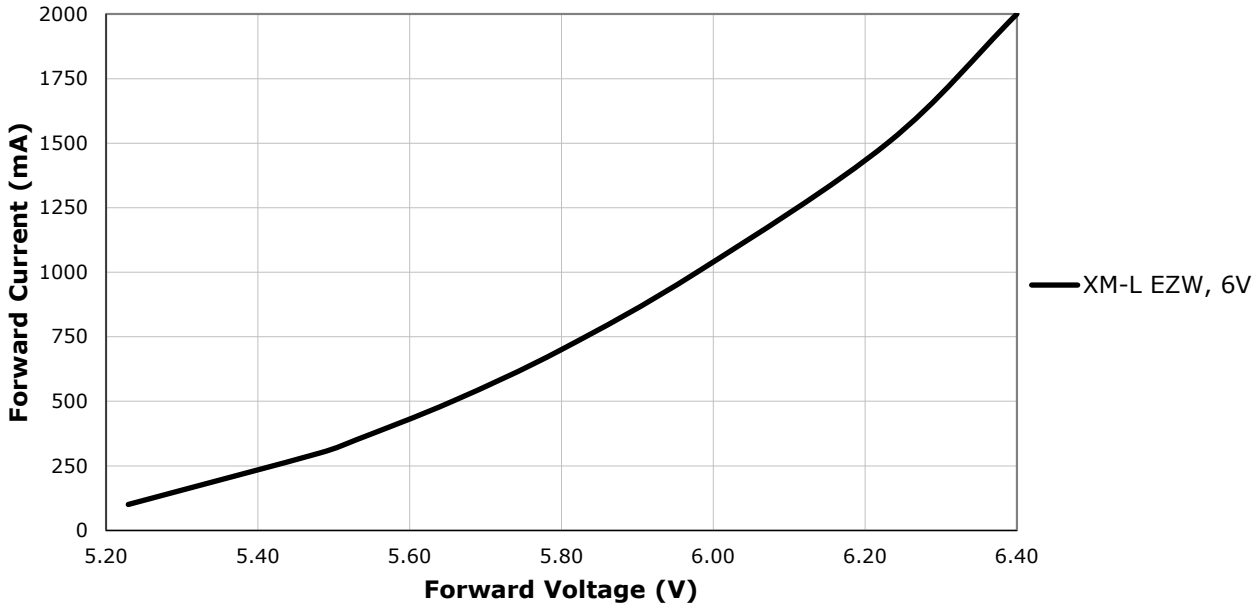

ELECTRICAL CHARACTERISTICS (T_J = 85 °C) - CONTINUED

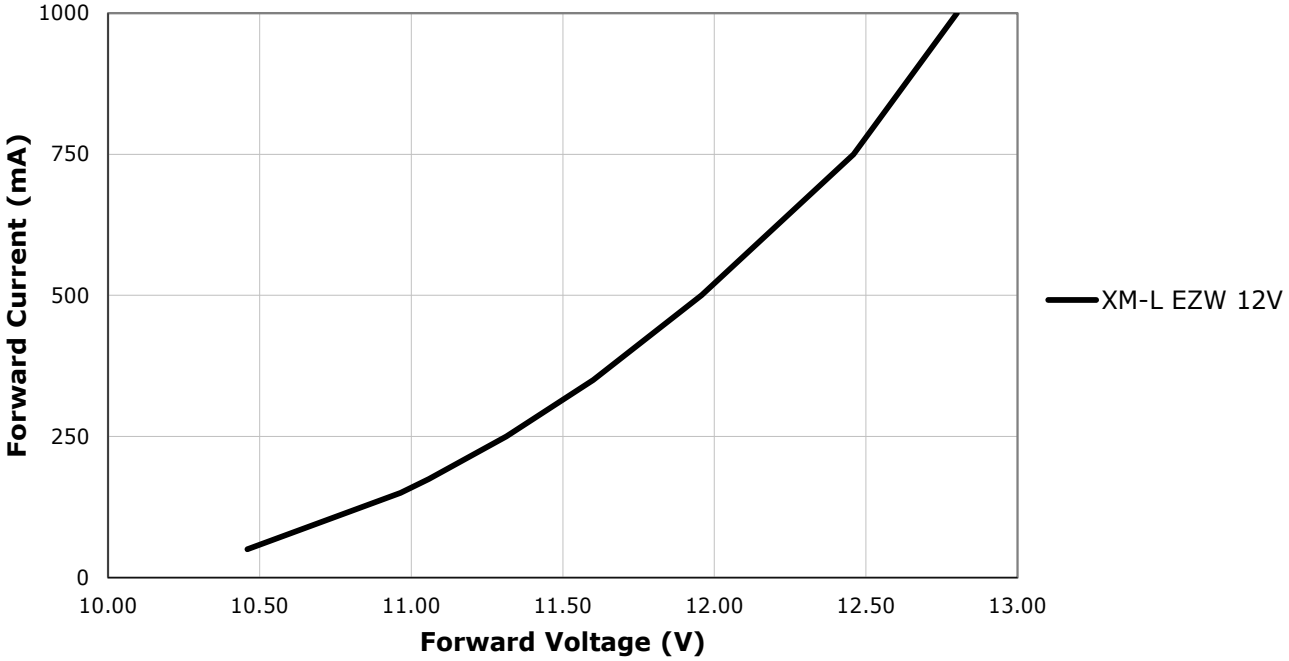

Copyright © 2011-2013 Cree, Inc. All rights reserved. The information in this document is subject to change without notice. Cree®, the Cree logo and XLamp® are registered trademarks and EasyWhite™ is a trademark of Cree, Inc.

RELATIVE FLUX VS. CURRENT (T_J = 85°C)

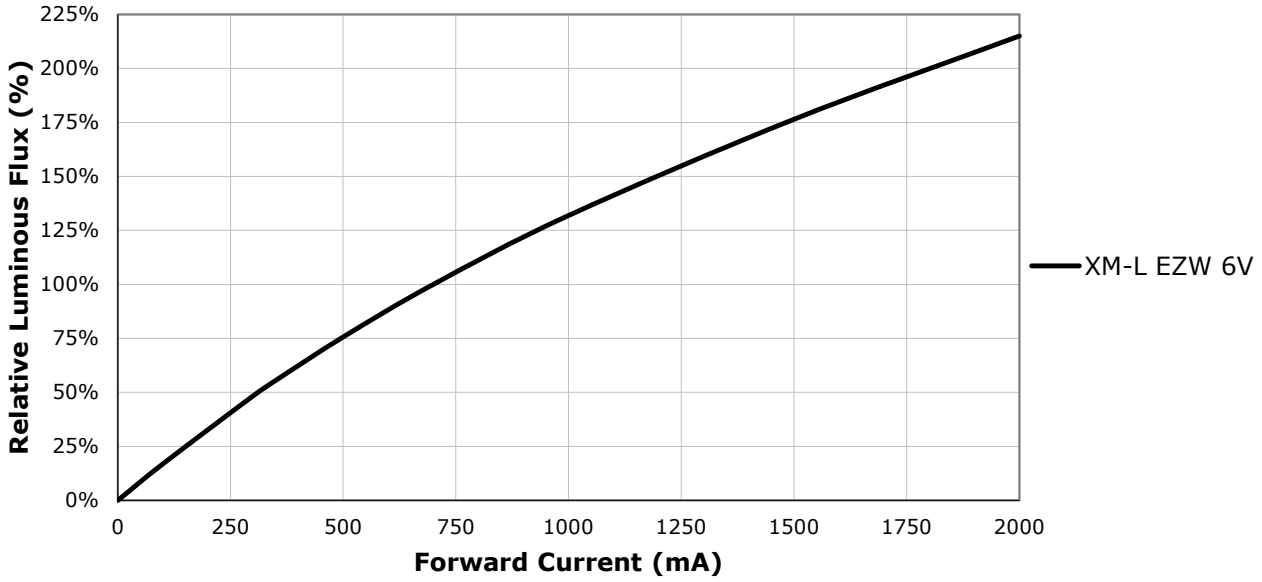

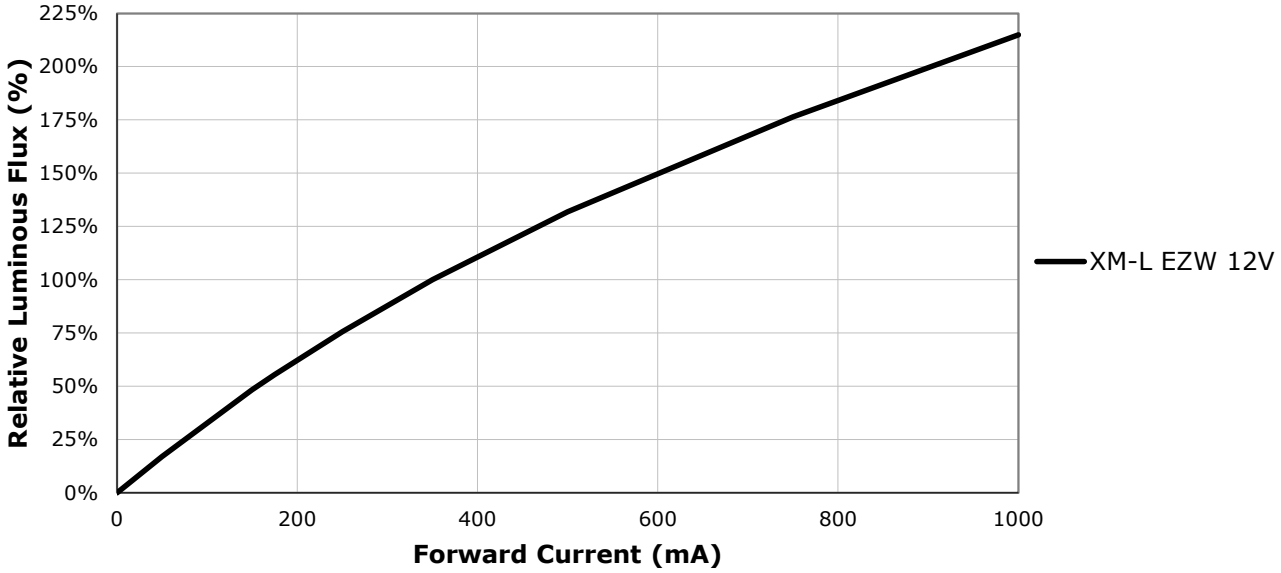

Copyright © 2011-2013 Cree, Inc. All rights reserved. The information in this document is subject to change without notice. Cree®, the Cree logo and XLamp® are registered trademarks and EasyWhite™ is a trademark of Cree, Inc.

RELATIVE CHROMATICITY VS. CURRENT AND TEMPERATURE

XM-L EZW 6V

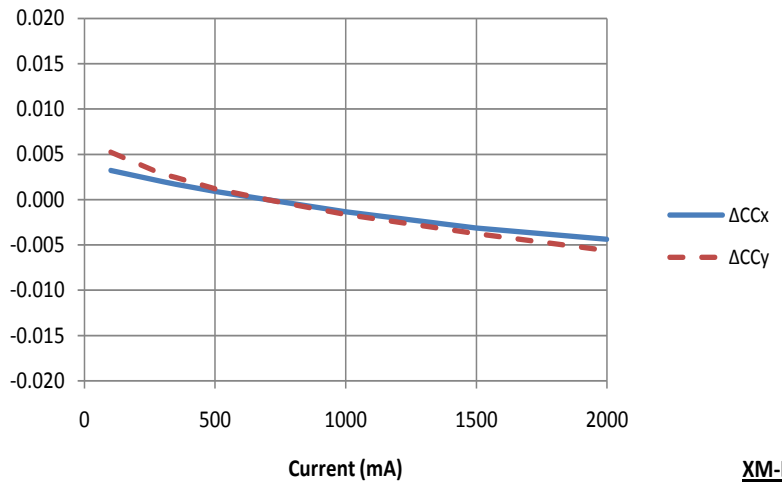

XM-L EZW 12V

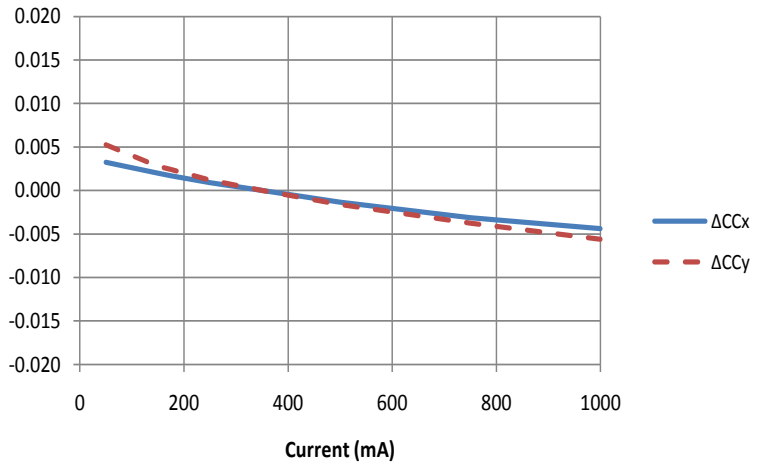

XM-L EZW, 6V, 12V

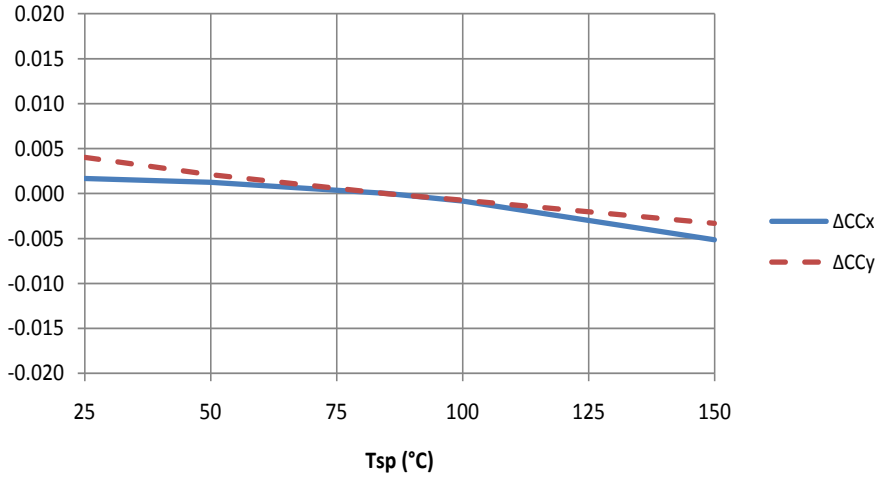

Copyright © 2011-2013 Cree, Inc. All rights reserved. The information in this document is subject to change without notice. Cree®, the Cree logo and XLamp® are registered trademarks and EasyWhite™ is a trademark of Cree, Inc.

TYPICAL SPATIAL DISTRIBUTION

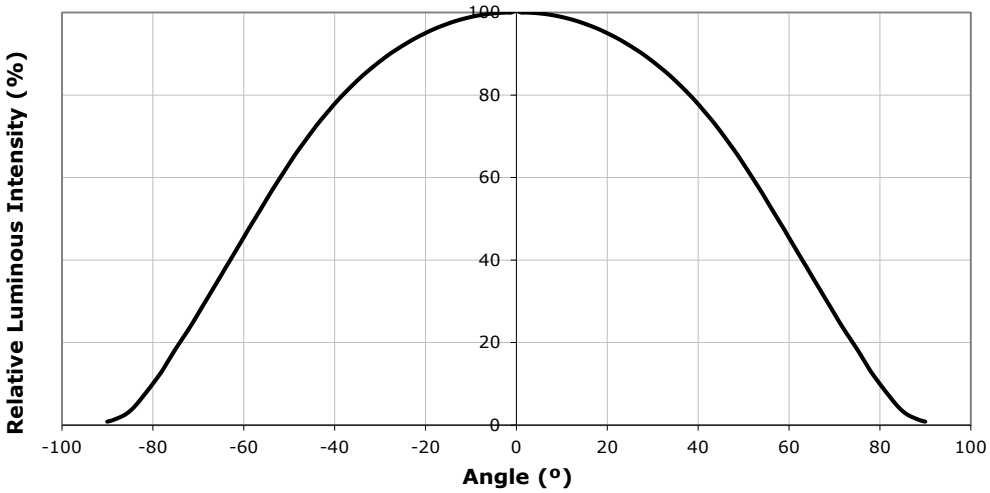

THERMAL DESIGN

The maximum forward current is determined by the thermal resistance between the LED junction and ambient. It is crucial for the end product to be designed in a manner that minimizes the thermal resistance from the solder point to ambient in order to optimize lamp life and optical characteristics.

XLamp XM-L EZW, 6-V

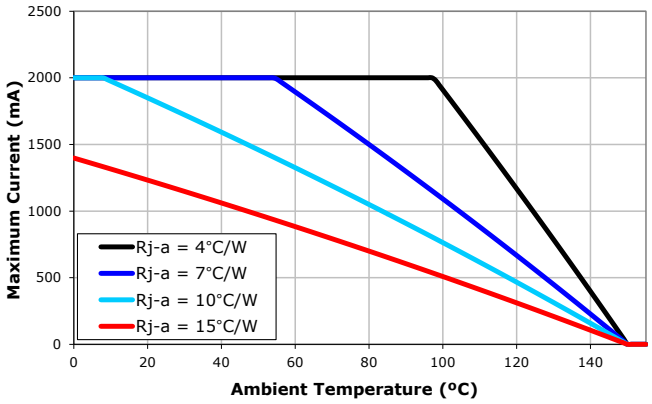

XLamp XM-L EZW, 12-V

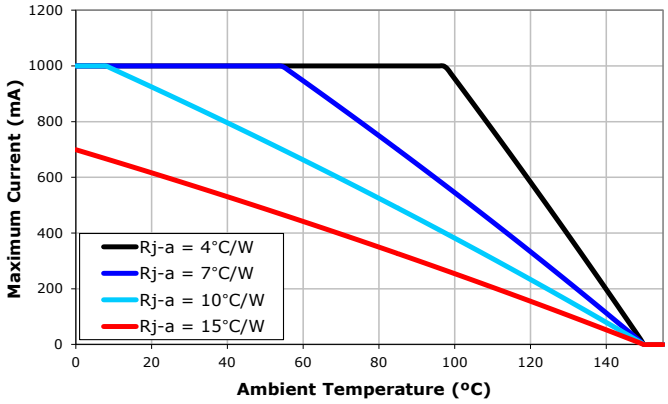

Copyright © 2011-2013 Cree, Inc. All rights reserved. The information in this document is subject to change without notice. Cree®, the Cree logo and XLamp® are registered trademarks and EasyWhite™ is a trademark of Cree, Inc.

PERFORMANCE GROUPS – BRIGHTNESS (T_J = 85 °C)

XLamp XM-L EasyWhite LEDs are tested for luminous flux and placed into one the following bins.

Group Code	Min. Luminous Flux @ 700 mA, 6 V (@ 350 mA , 12 V)	Max. Luminous Flux @ 700 mA, 6 V (@ 350 mA, 12 V)
S6	180	200
T2	200	220
T3	220	240
T4	240	260
T5	260	280
T6	280	300
U2	300	320
U3	320	340
U4	340	360
U5	360	380
U6	380	400
V2	400	420

Copyright © 2011-2013 Cree, Inc. All rights reserved. The information in this document is subject to change without notice. Cree®, the Cree logo and XLamp® are registered trademarks and EasyWhite™ is a trademark of Cree, Inc.

PERFORMANCE GROUPS – CHROMATICITY (T_J = 85 °C)

XLamp XM-L EasyWhite LEDs are tested for chromaticity and placed into one of the regions defined by the following bounding coordinates.

EasyWhite Color Temperatures – 4-Step			
Code	CCT	x	y
50F	5000K	0.3407	0.3459
		0.3415	0.3586
		0.3499	0.3654
		0.3484	0.3521
40F	4000 K	0.3744	0.3685
		0.3782	0.3837
		0.3912	0.3917
		0.3863	0.3758
35F	3500 K	0.3981	0.3800
		0.4040	0.3966
		0.4186	0.4037
		0.4116	0.3865
30F	3000 K	0.4242	0.3919
		0.4322	0.4096
		0.4449	0.4141
		0.4359	0.3960
27F	2700 K	0.4475	0.3994
		0.4573	0.4178
		0.4695	0.4207
		0.4589	0.4021

EasyWhite Color Temperatures – 2-Step			
Code	CCT	x	y
50H	5000K	0.3429	0.3507
		0.3434	0.3571
		0.3475	0.3604
		0.3469	0.3539
40H	4000 K	0.3784	0.3741
		0.3804	0.3818
		0.3867	0.3857
		0.3844	0.3778
35H	3500 K	0.4030	0.3857
		0.4061	0.3941
		0.4132	0.3976
		0.4099	0.3890
30H	3000 K	0.4291	0.3973
		0.4333	0.4062
		0.4395	0.4084
		0.4351	0.3994
27H	2700 K	0.4528	0.4046
		0.4578	0.4138
		0.4638	0.4152
		0.4586	0.4060

ANSI White Bins				
Code	CCT	Bin Code	x	y
0E3	5000K	3A0	.3371	.3490
			.3451	.3554
			.3440	.3427
			.3366	.3369
		3B0	.3376	.3616
			.3463	.3687
			.3451	.3554
			.3371	.3490
		3C0	.3463	.3687
			.3551	.3760
			.3533	.3620
			.3451	.3554
		3D0	.3451	.3554
			.3533	.3620
			.3515	.3487
			.3440	.3427

Copyright © 2011-2013 Cree, Inc. All rights reserved. The information in this document is subject to change without notice. Cree®, the Cree logo and XLamp® are registered trademarks and EasyWhite™ is a trademark of Cree, Inc.

CREE EASYWHITE BINS PLOTTED ON THE 1931 CIE COLOR SPACE (T_J = 85 °C)

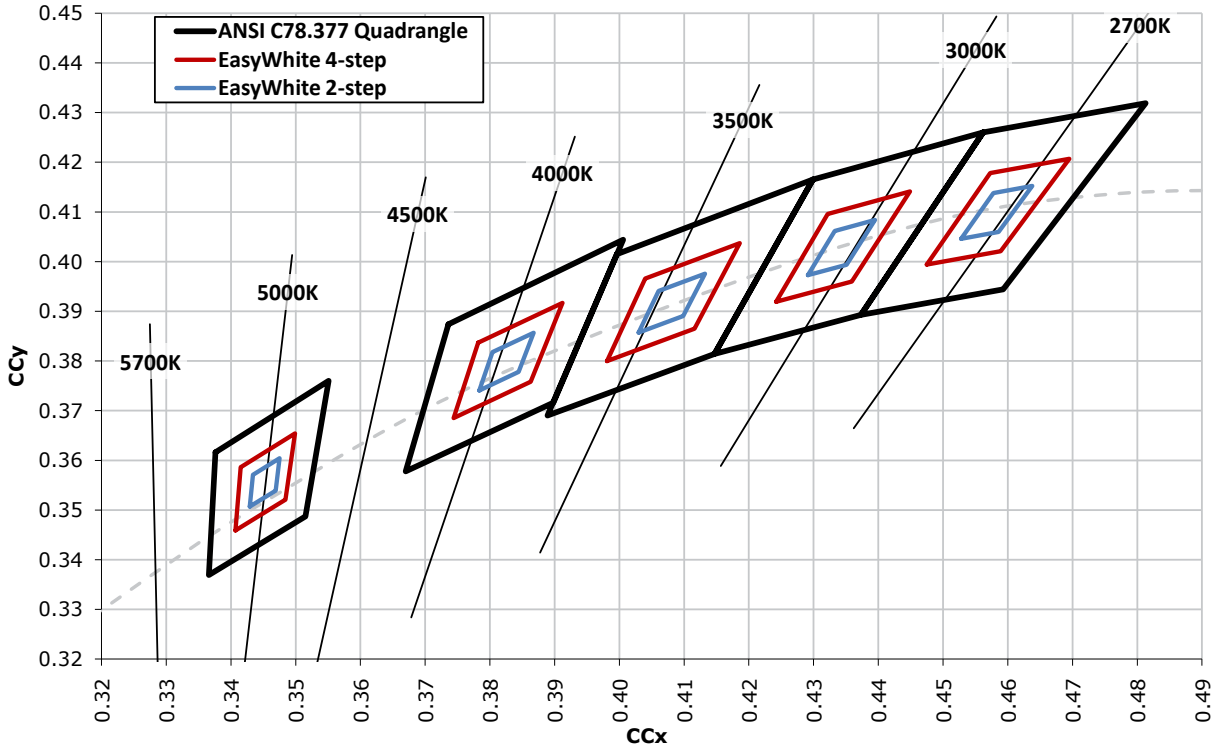

CREE ANSI WHITE BINS PLOTTED ON THE 1931 CIE COLOR SPACE (T_J=85 °C)

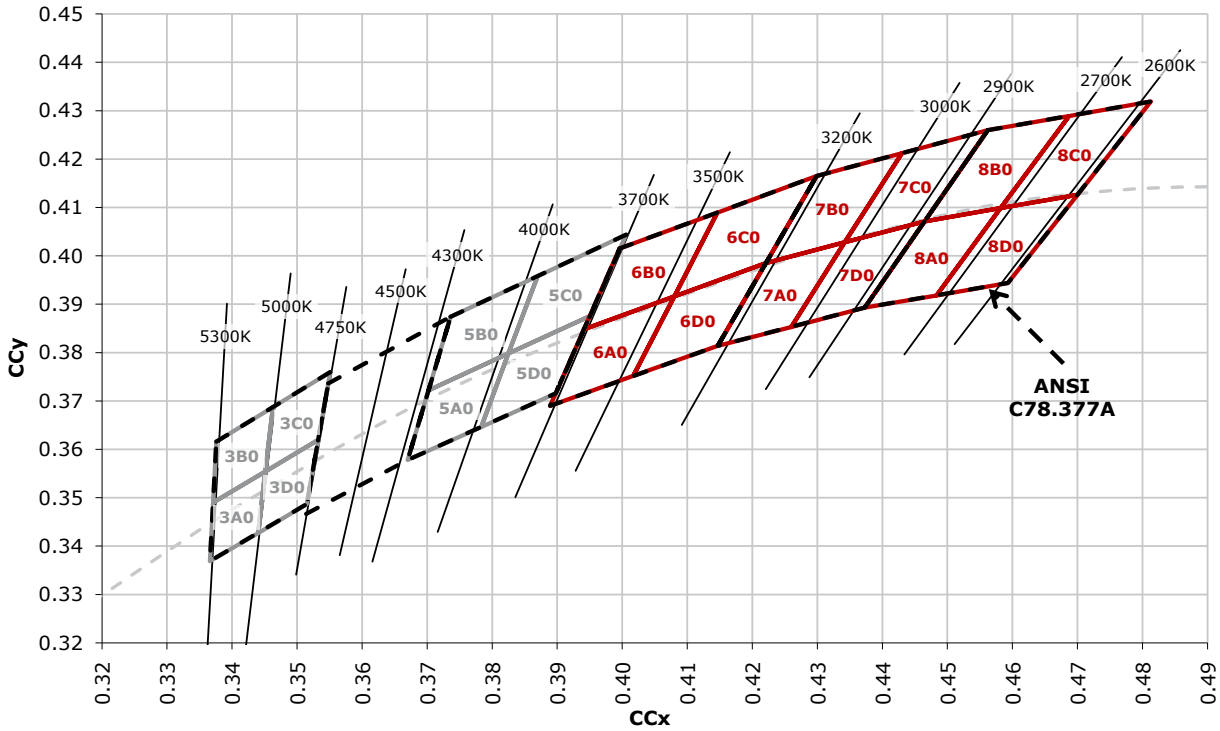

Copyright © 2011-2013 Cree, Inc. All rights reserved. The information in this document is subject to change without notice. Cree®, the Cree logo and XLamp® are registered trademarks and EasyWhite™ is a trademark of Cree, Inc.

BIN AND ORDER CODE FORMAT

Bin codes and order codes are configured as follows:

Order Code

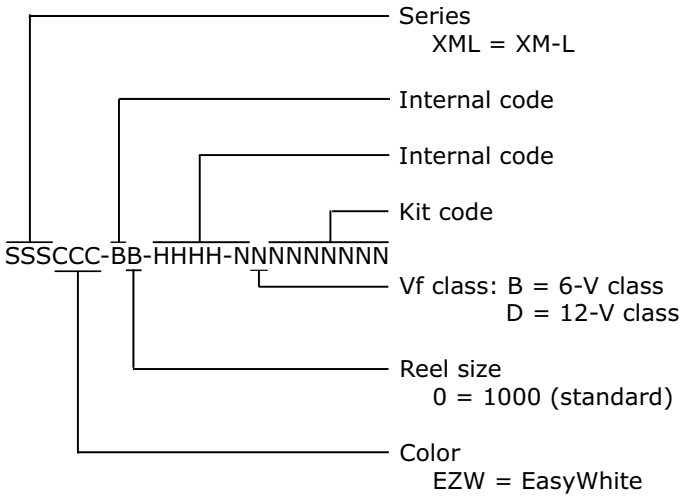

Bin Code

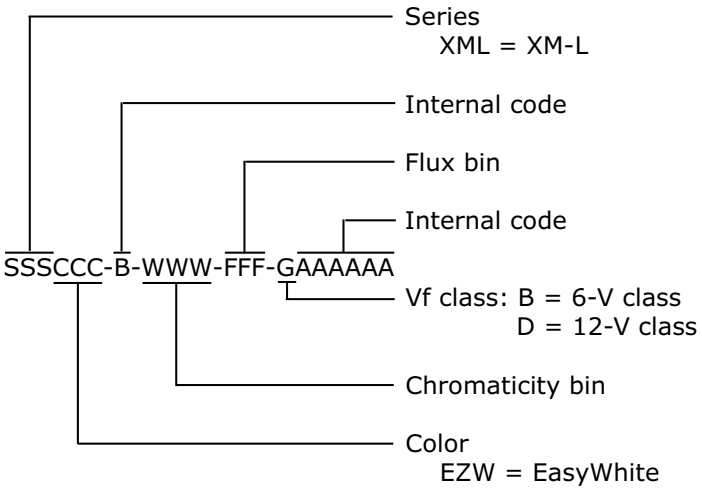

Copyright © 2011-2013 Cree, Inc. All rights reserved. The information in this document is subject to change without notice. Cree®, the Cree logo and XLamp® are registered trademarks and EasyWhite™ is a trademark of Cree, Inc.

REFLOW SOLDERING CHARACTERISTICS

In testing, Cree has found XLamp XM-L LEDs to be compatible with JEDEC J-STD-020C, using the parameters listed below. As a general guideline, Cree recommends that users follow the recommended soldering profile provided by the manufacturer of solder paste used.

Note that this general guideline may not apply to all PCB designs and configurations of reflow soldering equipment.

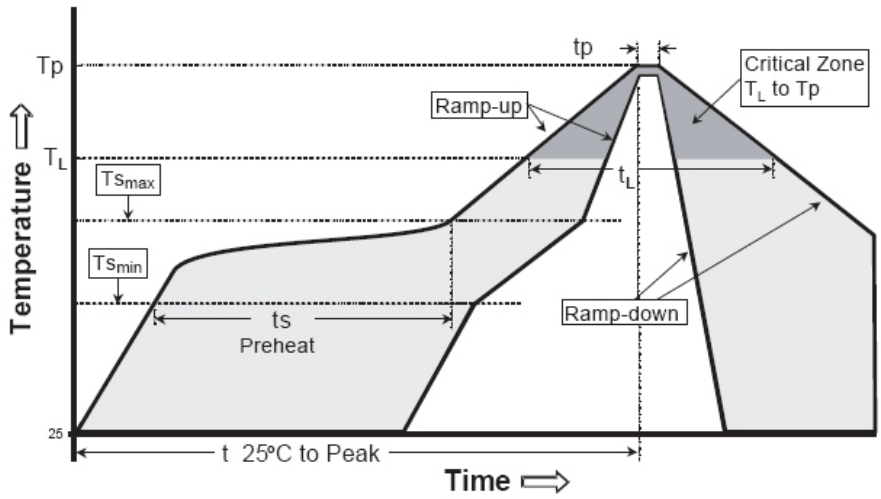

IPC/JEDEC J-STD-020C

Profile Feature	Lead-Based Solder	Lead-Free Solder
Average Ramp-Up Rate (Ts_{max} to Tp)	3 °C/second max.	3 °C/second max.
Preheat: Temperature Min (Ts_{min})	100 °C	150 °C
Preheat: Temperature Max (Ts_{max})	150 °C	200 °C
Preheat: Time (ts_{min} to ts_{max})	60-120 seconds	60-180 seconds
Time Maintained Above: Temperature (T_L)	183 °C	217 °C
Time Maintained Above: Time (t_L)	60-150 seconds	60-150 seconds
Peak/Classification Temperature (Tp)	215 °C	260 °C
Time Within 5 °C of Actual Peak Temperature (tp)	10-30 seconds	20-40 seconds
Ramp-Down Rate	6 °C/second max.	6 °C/second max.
Time 25 °C to Peak Temperature	6 minutes max.	8 minutes max.

Note: All temperatures refer to the topside of the package, measured on the package body surface.

Copyright © 2011-2013 Cree, Inc. All rights reserved. The information in this document is subject to change without notice. Cree®, the Cree logo and XLamp® are registered trademarks and EasyWhite™ is a trademark of Cree, Inc.

NOTES

Lumen Maintenance Projections

Cree now uses standardized IES LM-80-08 and TM-21-11 methods for collecting long-term data and extrapolating LED lumen maintenance. For information on the specific LM-80 data sets available for this LED, refer to the public LM-80 results document at www.cree.com/xlamp_app_notes/LM80_results.

Please consult the XLamp Long-Term Lumen Maintenance application note at www.cree.com/xlamp_app_notes/lumen_maintenance for more details on Cree's lumen maintenance testing and forecasting. Please read the XLamp Thermal Management application note at www.cree.com/xlamp_app_notes/thermal_management for details on how thermal design, ambient temperature, and drive current affect the LED junction temperature.

Moisture Sensitivity

In testing, Cree has found XLamp XM-L LEDs to have unlimited floor life in conditions ≤30 ºC/85% relative humidity (RH). Moisture testing included a 168-hour soak at 85 ºC/85% RH followed by 3 reflow cycles, with visual and electrical inspections at each stage.

Cree recommends keeping XLamp LEDs in their sealed moisture-barrier packaging until immediately prior to use. Cree also recommends returning any unused LEDS to the resealable moisture-barrier bag and closing the bag immediately after use.

RoHS Compliance

The levels of RoHS restricted materials in this product are below the maximum concentration values (also referred to as the threshold limits) permitted for such substances, or are used in an exempted application, in accordance with EU Directive 2011/65/EC (RoHS2), as amended through June 8, 2011. RoHS Declarations for this product can be obtain from your Cree representative or obtained from the Product Ecology section of www.cree.com.

UL Recognized Component

Level 4 enclosure consideration. The LED package or a portion thereof has been investigated as a fire and electrical enclosure per ANSI/UL 8750.

Vision Advisory Claim

WARNING. Do not look at exposed lamp in operation. Eye injury can result. For more information about LEDs and eye safety, please refer to the Cree LED Eye Safety application note at www.cree.com/xlamp_app_notes/led_eye_safety.

Copyright © 2011-2013 Cree, Inc. All rights reserved. The information in this document is subject to change without notice. Cree®, the Cree logo and XLamp® are registered trademarks and EasyWhite™ is a trademark of Cree, Inc.

MECHANICAL DIMENSIONS

All measurements are ±.13 mm unless otherwise indicated.

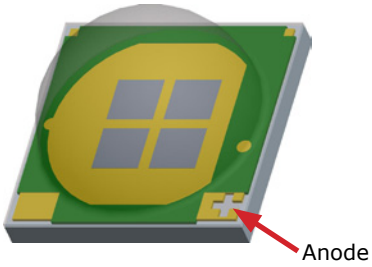

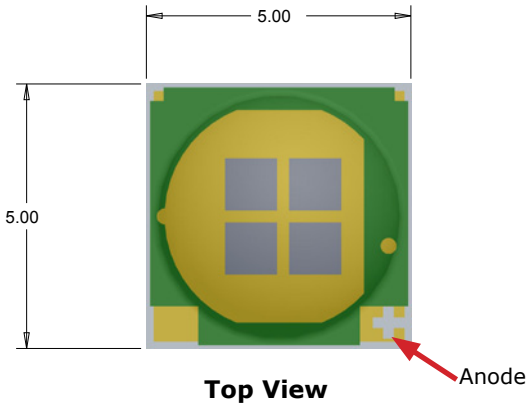

Top View

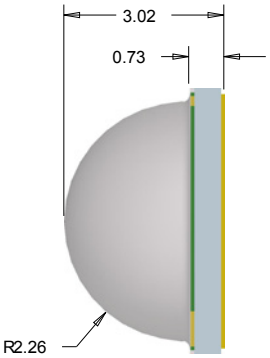

Side View

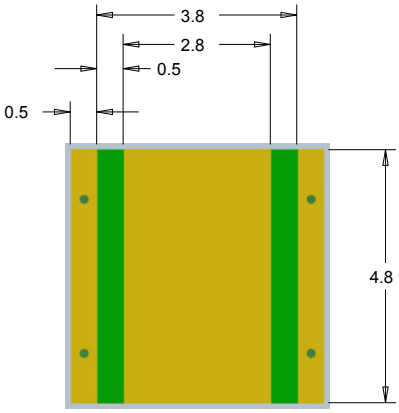

Bottom View

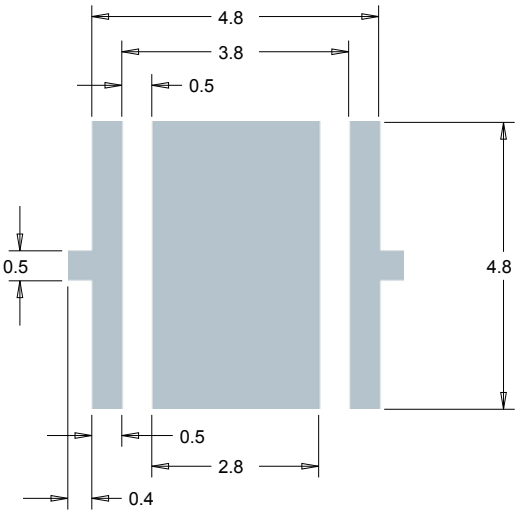

Recommended PCB Solder Pad

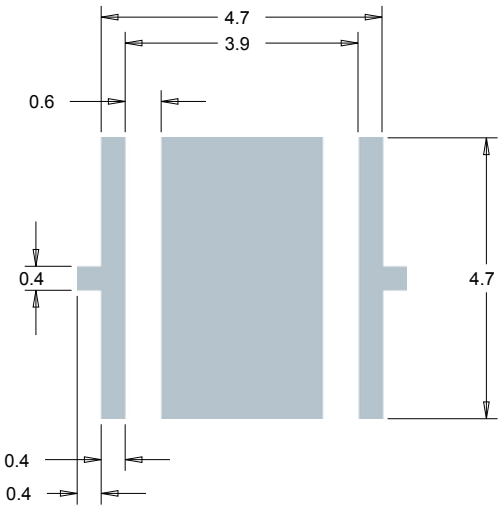

Recommended Stencil Pattern (Shaded Area Is Open)

Copyright © 2011-2013 Cree, Inc. All rights reserved. The information in this document is subject to change without notice. Cree®, the Cree logo and XLamp® are registered trademarks and EasyWhite™ is a trademark of Cree, Inc.

TAPE AND REEL

All Cree carrier tapes conform to EIA-481D, Automated Component Handling Systems Standard.

All dimensions in mm.

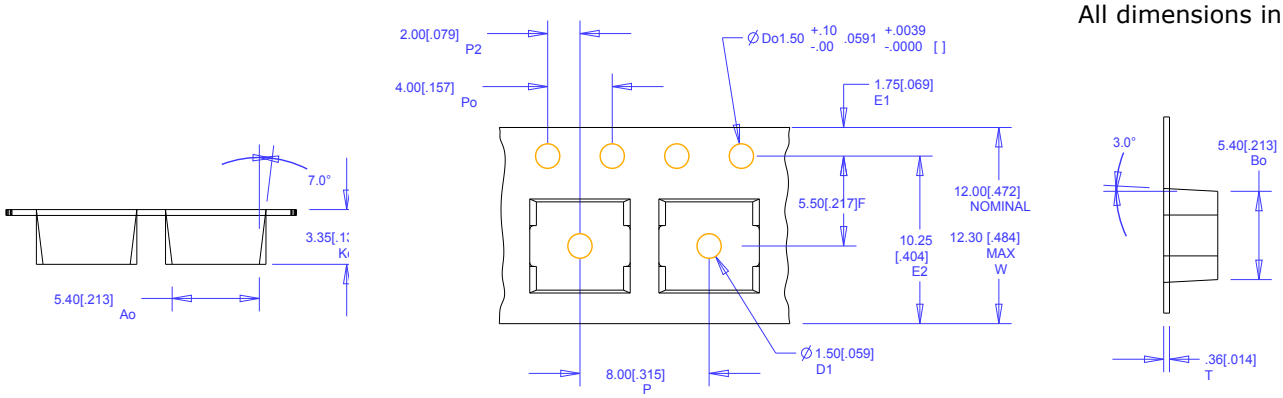

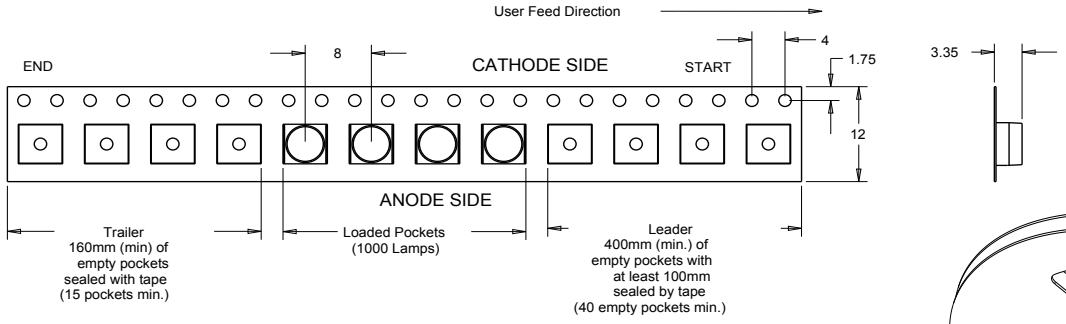

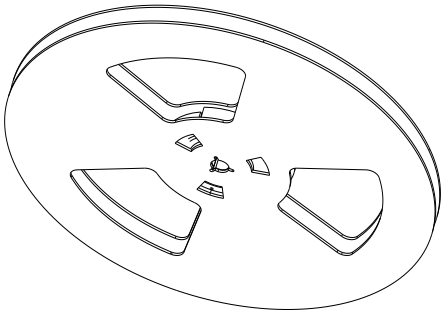

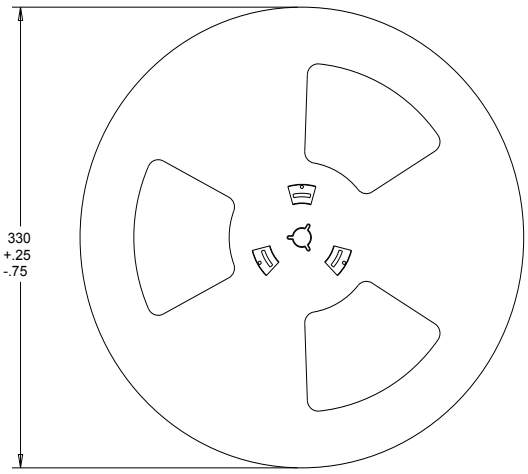

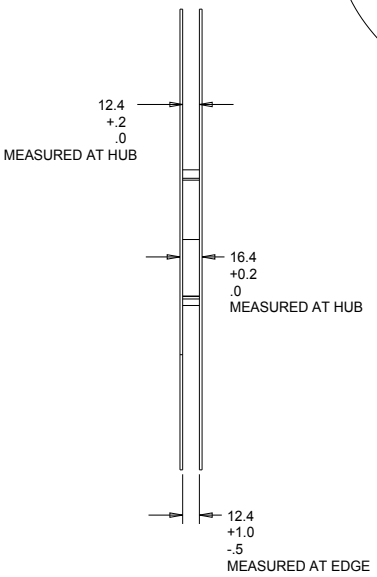

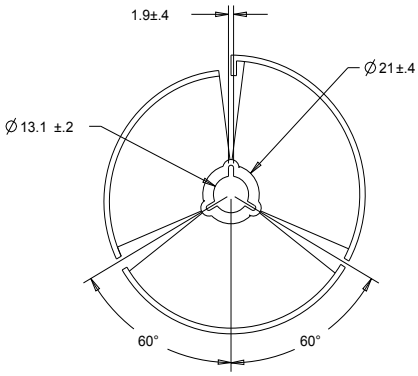

Copyright © 2011-2013 Cree, Inc. All rights reserved. The information in this document is subject to change without notice. Cree®, the Cree logo and XLamp® are registered trademarks and EasyWhite™ is a trademark of Cree, Inc.

PACKAGING

Unpackaged Reel

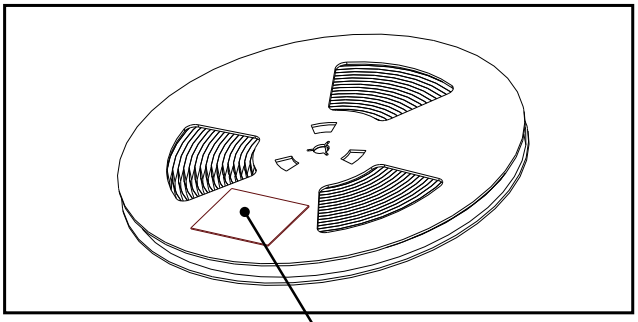

Packaged Reel

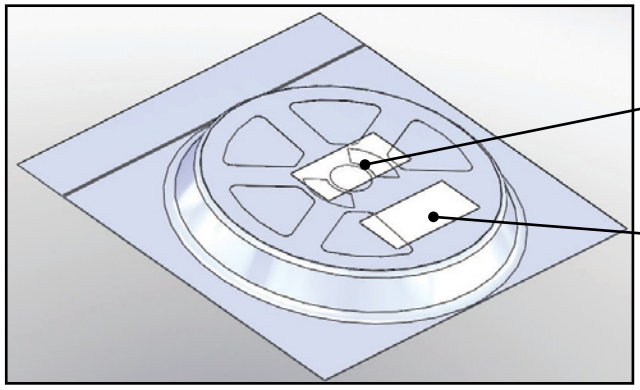

Boxed Reel

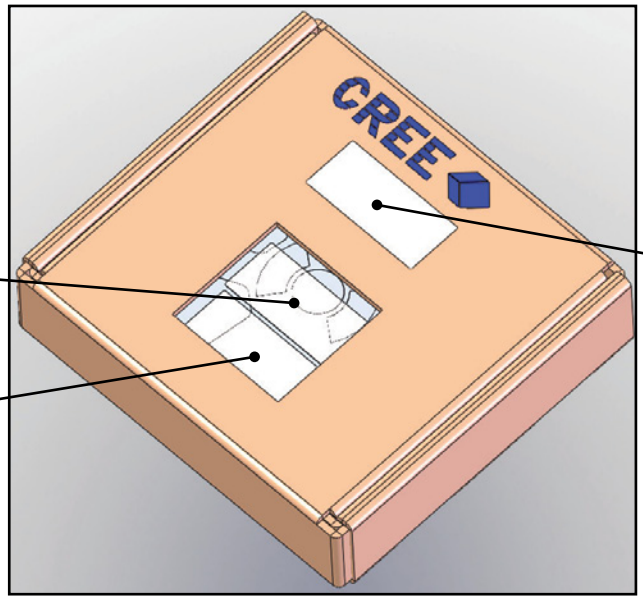

Copyright © 2011-2013 Cree, Inc. All rights reserved. The information in this document is subject to change without notice. Cree®, the Cree logo and XLamp® are registered trademarks and EasyWhite™ is a trademark of Cree, Inc.

Мы молодая и активно развивающаяся компания в области поставок электронных компонентов. Мы поставляем электронные компоненты отечественного и импортного производства напрямую от производителей и с крупнейших складов мира.

Благодаря сотрудничеству с мировыми поставщиками мы осуществляем комплексные и плановые поставки широчайшего спектра электронных компонентов.

Собственная эффективная логистика и склад в обеспечивает надежную поставку продукции в точно указанные сроки по всей России.

Мы осуществляем техническую поддержку нашим клиентам и предпродажную проверку качества продукции. На все поставляемые продукты мы предоставляем гарантию .

Осуществляем поставки продукции под контролем ВП МО РФ на предприятия военно-промышленного комплекса России , а также работаем в рамках 275 ФЗ с открытием отдельных счетов в уполномоченном банке. Система менеджмента качества компании соответствует требованиям ГОСТ ISO 9001.

Минимальные сроки поставки, гибкие цены, неограниченный ассортимент и индивидуальный подход к клиентам являются основой для выстраивания долгосрочного и эффективного сотрудничества с предприятиями радиоэлектронной промышленности, предприятиями ВПК и научно-исследовательскими институтами России.

С нами вы становитесь еще успешнее!

Наши контакты:

Телефон: +7 812 627 14 35

Электронная почта: sales@st-electron.ru

Адрес: 198099, Санкт-Петербург, Промышленная ул, дом № 19, литера Н, помещение 100-Н Офис 331