# Cree® XLamp® XM-L EasyWhite™ LEDs

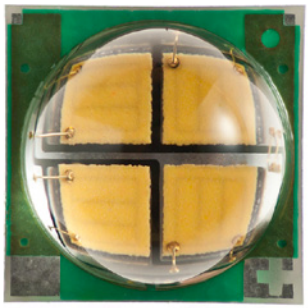

## PRODUCT DESCRIPTION

The XLamp XM-L EasyWhite LED eliminates chromaticity binning, and enables luminaire and bulb manufacturers to deliver the consistent color and high efficacy light output of a multi-die LED in the compact XM-L footprint. XLamp XM-L EasyWhite LEDs can reduce LED-to-LED color variation to within a 2-step MacAdam ellipse, 94% smaller than the total area of the corresponding ANSI C78.377 color region.

The XLamp XM-L EasyWhite LED is the perfect choice for lighting applications where moderate to high luminous flux output is required from a single, small point source. Example applications include: LED retrofit bulbs, commercial/retail display spotlights, and other indoor general-illumination applications.

## FEATURES

- Available in 4-step and 2-step EasyWhite bins at 2700 K, 3000 K, 3500 K, 4000 K, 5000 K CCT
- Wide range of operating current – up to 2 A @ 6 V
- 85 °C binning and characterization
- Available in 6-V and 12-V versions
- Low thermal resistance: 2.5 °C/W
- Wide viewing angle: 115°
- Wide variety of CRI choices: standard CRI as well as 80-, 85-, 90-minimum CRI
- Electrically neutral thermal path
- Unlimited floor life at ≤ 30 ºC/85% RH
- Reflow solderable - JEDEC J-STD-020C
- RoHS-compliant
- UL-recognized component (E349212)

## TABLE OF CONTENTS

Product Characteristics ..... 2
Flux Characteristics, Standard Order Codes and Bins, 6-Volt XM-L EZW .. 3
Flux Characteristics, Standard Order Codes and Bins, 12-Volt XM-L EZW 6
Relative Spectral Power Distribution..... 9
Relative Flux vs. Junction Temperature ..... 9
Electrical Characteristics .....10
Relative Flux vs. Current .....11
Relative Chromaticity vs. Current and Temperature .....12
Typical Spatial Distribution .....13
Thermal Design .....13
Performance Groups – Brightness .14
Performance Groups – Chromaticity .....15
Cree EasyWhite Bins Plotted on the 1931 CIE Color Space .....16
Cree ANSI White Bins Plotted on the 1931 CIE Color Space .....16
Bin and Order Code Format.....17
Reflow Soldering Characteristics ...18
Notes.....19
Mechanical Dimensions.....20
Tape and Reel .....21
Packaging.....22



Copyright © 2011-2013 Cree, Inc. All rights reserved. The information in this document is subject to change without notice.
Cree®, the Cree logo and XLamp® are registered trademarks and EasyWhite™ is a trademark of Cree, Inc.

Cree, Inc.
4600 Silicon Drive
Durham, NC 27703
USA Tel: +1.919.313.5300

## PRODUCT CHARACTERISTICS

| Characteristics | Unit | Minimum | Typical | Maximum |
|---|---|---|---|---|
| Thermal Resistance, junction to solder point | °C/W | | 2.5 | |
| Viewing Angle (FWHM) | degrees | | 115 | |
| Temperature coefficient of voltage (6 V) | mV/°C | | -6.0 | |
| Temperature coefficient of voltage (12 V) | mV/°C | | -12.0 | |
| ESD Classification (HBM per Mil-Std-883D) | | | Class 2 | |
| DC Forward Current (6 V) | mA | | | 2000 |
| DC Forward Current (12 V) | mA | | | 1000 |
| Reverse Current (6 V, 12 V) | mA | | | -0.1 |
| Forward Voltage (@ 700 mA, 85 °C, 6 V) | V | | 5.7 | 7.0 |
| Forward Voltage (@ 350 mA, 85 °C, 12 V) | V | | 11.5 | 14.0 |
| LED junction temperature | °C | | | 150 |

Copyright © 2011-2013 Cree, Inc. All rights reserved. The information in this document is subject to change without notice. Cree®, the Cree logo and XLamp® are registered trademarks and EasyWhite™ is a trademark of Cree, Inc.

## FLUX CHARACTERISTICS, STANDARD ORDER CODES AND BINS, 6-VOLT XM-L EZW (700 mA, $T_J$ = 85 °C)

The following table provides the order codes for 6-Volt XLamp XM-L EZW LEDs.

| Color | CCT Range | Base Order Codes Min. Luminous Flux @ 700 mA | | | 2-Step Order Code | | 4-Step Order Code | |
|---|---|---|---|---|---|---|---|---|
| | | Group | Flux (lm) @ 85 °C | Flux (lm) @ 25 °C* | Chromaticity Region | | Chromaticity Region | |
| Standard CRI EasyWhite | 5000 K | U4 | 340 | 404 | 50H | XMLEZW-00-0000-0B00U450H | 50F | XMLEZW-00-0000-0B00U450F |
| | | U5 | 360 | 427 | | XMLEZW-00-0000-0B00U550H | | XMLEZW-00-0000-0B00U550F |
| | | U6 | 380 | 451 | | XMLEZW-00-0000-0B00U650H | | XMLEZW-00-0000-0B00U650F |
| | | V2 | 400 | 475 | | XMLEZW-00-0000-0B00V250H | | XMLEZW-00-0000-0B00V250F |
| | 4000 K | U2 | 300 | 356 | 40H | XMLEZW-00-0000-0B00U240H | 40F | XMLEZW-00-0000-0B00U240F |
| | | U3 | 320 | 380 | | XMLEZW-00-0000-0B00U340H | | XMLEZW-00-0000-0B00U340F |
| | | U4 | 340 | 404 | | XMLEZW-00-0000-0B00U440H | | XMLEZW-00-0000-0B00U440F |
| | 3500 K | T6 | 280 | 332 | 35H | XMLEZW-00-0000-0B00T635H | 35F | XMLEZW-00-0000-0B00T635F |
| | | U2 | 300 | 356 | | XMLEZW-00-0000-0B00U235H | | XMLEZW-00-0000-0B00U235F |
| | | U3 | 320 | 380 | | XMLEZW-00-0000-0B00U335H | | XMLEZW-00-0000-0B00U335F |
| | 3000 K | T5 | 260 | 309 | 30H | XMLEZW-00-0000-0B00T530H | 30F | XMLEZW-00-0000-0B00T530F |
| | | T6 | 280 | 332 | | XMLEZW-00-0000-0B00T630H | | XMLEZW-00-0000-0B00T630F |
| | | U2 | 300 | 356 | | XMLEZW-00-0000-0B00U230H | | XMLEZW-00-0000-0B00U230F |
| | | U3 | 320 | 380 | | XMLEZW-00-0000-0B00U330H | | XMLEZW-00-0000-0B00U330F |
| | 2700 K | T4 | 240 | 285 | 27H | XMLEZW-00-0000-0B00T427H | 27F | XMLEZW-00-0000-0B00T427F |
| | | T5 | 260 | 309 | | XMLEZW-00-0000-0B00T527H | | XMLEZW-00-0000-0B00T527F |
| | | T6 | 280 | 332 | | XMLEZW-00-0000-0B00T627H | | XMLEZW-00-0000-0B00T627F |
| | | U2 | 300 | 356 | | XMLEZW-00-0000-0B00U227H | | XMLEZW-00-0000-0B00U227F |

Notes:

- For Standard CRI parts, typical CRI is 80 for 4000–3500-K CCT parts and typical CRI is 82 for 3000–2700-K CCT.
- Cree maintains a tolerance of ±7% on flux and power measurements, ±0.005 on chromaticity (CCx, CCy) measurements and ±2 on CRI measurements.

* Flux values @ 25 °C are calculated and for reference only.

Copyright © 2011-2013 Cree, Inc. All rights reserved. The information in this document is subject to change without notice. Cree®, the Cree logo and XLamp® are registered trademarks and EasyWhite™ is a trademark of Cree, Inc.

## FLUX CHARACTERISTICS, STANDARD ORDER CODES AND BINS, 6-VOLT XM-L EZW (700 mA, $T_J$ = 85 °C) - CONTINUED

| Color | CCT Range | Base Order Codes Min. Luminous Flux @ 700 mA | | | 2-Step Order Code | | 4-Step Order Code | |
|---|---|---|---|---|---|---|---|---|
| | | Group | Flux (lm) @ 85 °C | Flux (lm) @ 25 °C* | Chromaticity Region | | Chromaticity Region | |
| 80-CRI Minimum EasyWhite | 4000 K | U2 | 300 | 356 | 40H | XMLEZW-00-0000-0B0HU240H | 40F | XMLEZW-00-0000-0B0HU240F |
| | | U3 | 320 | 380 | | XMLEZW-00-0000-0B0HU340H | | XMLEZW-00-0000-0B0HU340F |
| | | U4 | 340 | 404 | | XMLEZW-00-0000-0B0HU440H | | XMLEZW-00-0000-0B0HU440F |
| | 3500 K | T5 | 260 | 309 | 35H | XMLEZW-00-0000-0B0HT535H | 35F | XMLEZW-00-0000-0B0HT535F |
| | | T6 | 280 | 332 | | XMLEZW-00-0000-0B0HT635H | | XMLEZW-00-0000-0B0HT635F |
| | | U2 | 300 | 356 | | XMLEZW-00-0000-0B0HU235H | | XMLEZW-00-0000-0B0HU235F |
| | | U3 | 320 | 380 | | XMLEZW-00-0000-0B0HU335H | | XMLEZW-00-0000-0B0HU335F |
| | 3000 K | T5 | 260 | 309 | 30H | XMLEZW-00-0000-0B0HT530H | 30F | XMLEZW-00-0000-0B0HT530F |
| | | T6 | 280 | 332 | | XMLEZW-00-0000-0B0HT630H | | XMLEZW-00-0000-0B0HT630F |
| | | U2 | 300 | 356 | | XMLEZW-00-0000-0B0HU230H | | XMLEZW-00-0000-0B0HU230F |
| | | U3 | 320 | 380 | | XMLEZW-00-0000-0B0HU330H | | XMLEZW-00-0000-0B0HU330F |
| | 2700 K | T4 | 240 | 285 | 27H | XMLEZW-00-0000-0B0HT427H | 27F | XMLEZW-00-0000-0B0HT427F |
| | | T5 | 260 | 309 | | XMLEZW-00-0000-0B0HT527H | | XMLEZW-00-0000-0B0HT527F |
| | | T6 | 280 | 332 | | XMLEZW-00-0000-0B0HT627H | | XMLEZW-00-0000-0B0HT627F |
| | | U2 | 300 | 356 | | XMLEZW-00-0000-0B0HU227H | | XMLEZW-00-0000-0B0HU227F |
| 85-CRI Minimum EasyWhite | 3000 K | T3 | 220 | 261 | 30H | XMLEZW-00-0000-0B0PT330H | 30F | XMLEZW-00-0000-0B0PT330F |
| | | T4 | 240 | 285 | | XMLEZW-00-0000-0B0PT430H | | XMLEZW-00-0000-0B0PT430F |
| | | T5 | 260 | 309 | | XMLEZW-00-0000-0B0PT530H | | XMLEZW-00-0000-0B0PT530F |
| | | T6 | 280 | 332 | | XMLEZW-00-0000-0B0PT630H | | XMLEZW-00-0000-0B0PT630F |
| | 2700 K | T2 | 200 | 237 | 27H | XMLEZW-00-0000-0B0PT227H | 27F | XMLEZW-00-0000-0B0PT227F |
| | | T3 | 220 | 261 | | XMLEZW-00-0000-0B0PT327H | | XMLEZW-00-0000-0B0PT327F |
| | | T4 | 240 | 285 | | XMLEZW-00-0000-0B0PT427H | | XMLEZW-00-0000-0B0PT427F |
| | | T5 | 260 | 309 | | XMLEZW-00-0000-0B0PT527H | | XMLEZW-00-0000-0B0PT527F |

Notes:
- For Standard CRI parts, typical CRI is 80 for 4000–3500-K CCT parts and typical CRI is 82 for 3000–2700-K CCT.
- Cree maintains a tolerance of ±7% on flux and power measurements, ±0.005 on chromaticity (CCx, CCy) measurements and ±2 on CRI measurements.

* Flux values @ 25 °C are calculated and for reference only.

Copyright © 2011-2013 Cree, Inc. All rights reserved. The information in this document is subject to change without notice. Cree®, the Cree logo and XLamp® are registered trademarks and EasyWhite™ is a trademark of Cree, Inc.

## FLUX CHARACTERISTICS, STANDARD ORDER CODES AND BINS, 6-VOLT XM-L EZW (700 mA, $T_J$ = 85 °C) - CONTINUED

| Color | CCT Range | Base Order Codes Min. Luminous Flux @ 700 mA | | | 2-Step Order Code | | 4-Step Order Code | |
|---|---|---|---|---|---|---|---|---|
| | | Group | Flux (lm) @ 85 °C | Flux (lm) @ 25 °C* | Chromaticity Region | | Chromaticity Region | |
| 90-CRI Minimum EasyWhite | 3000 K | T2 | 200 | 237 | 30H | XMLEZW-00-0000-0B0UT230H | 30F | XMLEZW-00-0000-0B0UT230F |
| | | T3 | 220 | 261 | | XMLEZW-00-0000-0B0UT330H | | XMLEZW-00-0000-0B0UT330F |
| | | T4 | 240 | 285 | | XMLEZW-00-0000-0B0UT430H | | XMLEZW-00-0000-0B0UT430F |
| | | T5 | 260 | 309 | | XMLEZW-00-0000-0B0UT530H | | XMLEZW-00-0000-0B0UT530F |
| | 2700 K | S6 | 180 | 214 | 27H | XMLEZW-00-0000-0B0US627H | 27F | XMLEZW-00-0000-0B0US627F |
| | | T2 | 200 | 237 | | XMLEZW-00-0000-0B0UT227H | | XMLEZW-00-0000-0B0UT227F |
| | | T3 | 220 | 261 | | XMLEZW-00-0000-0B0UT327H | | XMLEZW-00-0000-0B0UT327F |
| | | T4 | 240 | 285 | | XMLEZW-00-0000-0B0UT427H | | XMLEZW-00-0000-0B0UT427F |

| Color | CCT Range | Base Order Codes Min Luminous Flux @ 700 mA | | | Chromaticity Regions | Order Code |
|---|---|---|---|---|---|---|
| | | Group | Flux (lm) @ 85 °C | Flux (lm) @ 25 °C* | | |
| ANSI White | 5000 K | U4 | 340 | 404 | 0E3 | XMLEZW-00-0000-0B00U40E3 |
| | | U5 | 360 | 427 | | XMLEZW-00-0000-0B00U50E3 |
| | | U6 | 380 | 451 | | XMLEZW-00-0000-0B00U60E3 |
| | | V2 | 400 | 475 | | XMLEZW-00-0000-0B00V20E3 |

Notes:

- For Standard CRI parts, typical CRI is 80 for 4000–3500-K CCT parts and typical CRI is 82 for 3000–2700-K CCT.
- Cree maintains a tolerance of ±7% on flux and power measurements, ±0.005 on chromaticity (CCx, CCy) measurements and ±2 on CRI measurements.

* Flux values @ 25 °C are calculated and for reference only.

Copyright © 2011-2013 Cree, Inc. All rights reserved. The information in this document is subject to change without notice. Cree®, the Cree logo and XLamp® are registered trademarks and EasyWhite™ is a trademark of Cree, Inc.

## FLUX CHARACTERISTICS, STANDARD ORDER CODES AND BINS, 12-VOLT XM-L EZW (350 mA, $T_J$ = 85 °C)

The following table provides the order codes for 12-Volt XLamp XM-L EZW LEDs.

| Color | CCT Range | Base Order Codes Min. Luminous Flux @ 350 mA | | | 2-Step Order Code | | 4-Step Order Code | |
|---|---|---|---|---|---|---|---|---|
| | | Group | Flux (lm) @ 85 °C | Flux (lm) @ 25 °C* | Chromaticity Region | | Chromaticity Region | |
| Standard CRI EasyWhite | 5000 K | U4 | 340 | 404 | 50H | XMLEZW-00-0000-0D00U450H | 50F | XMLEZW-00-0000-0D00U450F |
| | | U5 | 360 | 427 | | XMLEZW-00-0000-0D00U550H | | XMLEZW-00-0000-0D00U550F |
| | | U6 | 380 | 451 | | XMLEZW-00-0000-0D00U650H | | XMLEZW-00-0000-0D00U650F |
| | | V2 | 400 | 475 | | XMLEZW-00-0000-0D00V250H | | XMLEZW-00-0000-0D00V250F |
| | 4000 K | U2 | 300 | 356 | 40H | XMLEZW-00-0000-0D00U240H | 40F | XMLEZW-00-0000-0D00U240F |
| | | U3 | 320 | 380 | | XMLEZW-00-0000-0D00U340H | | XMLEZW-00-0000-0D00U340F |
| | | U4 | 340 | 404 | | XMLEZW-00-0000-0D00U440H | | XMLEZW-00-0000-0D00U440F |
| | 3500 K | T6 | 280 | 332 | 35H | XMLEZW-00-0000-0D00T635H | 35F | XMLEZW-00-0000-0D00T635F |
| | | U2 | 300 | 356 | | XMLEZW-00-0000-0D00U235H | | XMLEZW-00-0000-0D00U235F |
| | | U3 | 320 | 380 | | XMLEZW-00-0000-0D00U335H | | XMLEZW-00-0000-0D00U335F |
| | 3000 K | T5 | 260 | 309 | 30H | XMLEZW-00-0000-0D00T530H | 30F | XMLEZW-00-0000-0D00T530F |
| | | T6 | 280 | 332 | | XMLEZW-00-0000-0D00T630H | | XMLEZW-00-0000-0D00T630F |
| | | U2 | 300 | 356 | | XMLEZW-00-0000-0D00U230H | | XMLEZW-00-0000-0D00U230F |
| | | U3 | 320 | 380 | | XMLEZW-00-0000-0D00U330H | | XMLEZW-00-0000-0D00U330F |
| | 2700 K | T4 | 240 | 285 | 27H | XMLEZW-00-0000-0D00T427H | 27F | XMLEZW-00-0000-0D00T427F |
| | | T5 | 260 | 309 | | XMLEZW-00-0000-0D00T527H | | XMLEZW-00-0000-0D00T527F |
| | | T6 | 280 | 332 | | XMLEZW-00-0000-0D00T627H | | XMLEZW-00-0000-0D00T627F |
| | | U2 | 300 | 356 | | XMLEZW-00-0000-0D00U227H | | XMLEZW-00-0000-0D00U227F |

Notes:
- For Standard CRI parts, typical CRI is 80 for 4000–3500-K CCT parts and typical CRI is 82 for 3000–2700-K CCT.
- Cree maintains a tolerance of ±7% on flux and power measurements, ±0.005 on chromaticity (CCx, CCy) measurements and ±2 on CRI measurements.

* Flux values @ 25 °C are calculated and for reference only.

Copyright © 2011-2013 Cree, Inc. All rights reserved. The information in this document is subject to change without notice. Cree®, the Cree logo and XLamp® are registered trademarks and EasyWhite™ is a trademark of Cree, Inc.

## FLUX CHARACTERISTICS, STANDARD ORDER CODES AND BINS, 12-VOLT XM-L EZW (350 mA, $T_J$ = 85 °C) - CONTINUED

| Color | CCT Range | Base Order Codes Min. Luminous Flux @ 350 mA | | | 2-Step Order Code | | 4-Step Order Code | |
|---|---|---|---|---|---|---|---|---|
| | | Group | Flux (lm) @ 85 °C | Flux (lm) @ 25 °C* | Chromaticity Region | | Chromaticity Region | |
| 80-CRI Minimum EasyWhite | 4000 K | U2 | 300 | 356 | 40H | XMLEZW-00-0000-0D0HU240H | 40F | XMLEZW-00-0000-0D0HU240F |
| | | U3 | 320 | 380 | | XMLEZW-00-0000-0D0HU340H | | XMLEZW-00-0000-0D0HU340F |
| | | U4 | 340 | 404 | | XMLEZW-00-0000-0D0HU440H | | XMLEZW-00-0000-0D0HU440F |
| | 3500 K | T5 | 260 | 309 | 35H | XMLEZW-00-0000-0D0HT535H | 35F | XMLEZW-00-0000-0D0HT535F |
| | | T6 | 280 | 332 | | XMLEZW-00-0000-0D0HT635H | | XMLEZW-00-0000-0D0HT635F |
| | | U2 | 300 | 356 | | XMLEZW-00-0000-0D0HU235H | | XMLEZW-00-0000-0D0HU235F |
| | | U3 | 320 | 380 | | XMLEZW-00-0000-0D0HU335H | | XMLEZW-00-0000-0D0HU335F |
| | 3000 K | T5 | 260 | 309 | 30H | XMLEZW-00-0000-0D0HT530H | 30F | XMLEZW-00-0000-0D0HT530F |
| | | T6 | 280 | 332 | | XMLEZW-00-0000-0D0HT630H | | XMLEZW-00-0000-0D0HT630F |
| | | U2 | 300 | 356 | | XMLEZW-00-0000-0D0HU230H | | XMLEZW-00-0000-0D0HU230F |
| | | U3 | 320 | 380 | | XMLEZW-00-0000-0D0HU330H | | XMLEZW-00-0000-0D0HU330F |
| | 2700 K | T4 | 240 | 285 | 27H | XMLEZW-00-0000-0D0HT427H | 27F | XMLEZW-00-0000-0D0HT427F |
| | | T5 | 260 | 309 | | XMLEZW-00-0000-0D0HT527H | | XMLEZW-00-0000-0D0HT527F |
| | | T6 | 280 | 332 | | XMLEZW-00-0000-0D0HT627H | | XMLEZW-00-0000-0D0HT627F |
| | | U2 | 300 | 356 | | XMLEZW-00-0000-0D0HU227H | | XMLEZW-00-0000-0D0HU227F |
| 85-CRI Minimum EasyWhite | 3000 K | T3 | 220 | 261 | 30H | XMLEZW-00-0000-0D0PT330H | 30F | XMLEZW-00-0000-0D0PT330F |
| | | T4 | 240 | 285 | | XMLEZW-00-0000-0D0PT430H | | XMLEZW-00-0000-0D0PT430F |
| | | T5 | 260 | 309 | | XMLEZW-00-0000-0D0PT530H | | XMLEZW-00-0000-0D0PT530F |
| | | T6 | 280 | 332 | | XMLEZW-00-0000-0D0PT630H | | XMLEZW-00-0000-0D0PT630F |
| | 2700 K | T2 | 200 | 237 | 27H | XMLEZW-00-0000-0D0PT227H | 27F | XMLEZW-00-0000-0D0PT227F |
| | | T3 | 220 | 261 | | XMLEZW-00-0000-0D0PT327H | | XMLEZW-00-0000-0D0PT327F |
| | | T4 | 240 | 285 | | XMLEZW-00-0000-0D0PT427H | | XMLEZW-00-0000-0D0PT427F |
| | | T5 | 260 | 309 | | XMLEZW-00-0000-0D0PT527H | | XMLEZW-00-0000-0D0PT527F |

Notes:

- For Standard CRI parts, typical CRI is 80 for 4000–3500-K CCT parts and typical CRI is 82 for 3000–2700-K CCT.
- Cree maintains a tolerance of ±7% on flux and power measurements, ±0.005 on chromaticity (CCx, CCy) measurements and ±2 on CRI measurements.

* Flux values @ 25 °C are calculated and for reference only.

Copyright © 2011-2013 Cree, Inc. All rights reserved. The information in this document is subject to change without notice. Cree®, the Cree logo and XLamp® are registered trademarks and EasyWhite™ is a trademark of Cree, Inc.

## FLUX CHARACTERISTICS, STANDARD ORDER CODES AND BINS, 12-VOLT XM-L EZW (350 mA, $T_J$ = 85 °C) - CONTINUED

| Color | CCT Range | Base Order Codes Min. Luminous Flux @ 350 mA | | | 2-Step Order Code | | 4-Step Order Code | |
|---|---|---|---|---|---|---|---|---|
| | | Group | Flux (lm) @ 85 °C | Flux (lm) @ 25 °C* | Chromaticity Region | | Chromaticity Region | |
| 90-CRI Minimum EasyWhite | 3000 K | T2 | 200 | 237 | 30H | XMLEZW-00-0000-0D0UT230H | 30F | XMLEZW-00-0000-0D0UT230F |
| | | T3 | 220 | 261 | | XMLEZW-00-0000-0D0UT330H | | XMLEZW-00-0000-0D0UT330F |
| | | T4 | 240 | 285 | | XMLEZW-00-0000-0D0UT430H | | XMLEZW-00-0000-0D0UT430F |
| | | T5 | 260 | 309 | | XMLEZW-00-0000-0D0UT530H | | XMLEZW-00-0000-0D0UT530F |
| | 2700 K | S6 | 180 | 214 | 27H | XMLEZW-00-0000-0D0US627H | 27F | XMLEZW-00-0000-0D0US627F |
| | | T2 | 200 | 237 | | XMLEZW-00-0000-0D0UT227H | | XMLEZW-00-0000-0D0UT227F |
| | | T3 | 220 | 261 | | XMLEZW-00-0000-0D0UT327H | | XMLEZW-00-0000-0D0UT327F |
| | | T4 | 240 | 285 | | XMLEZW-00-0000-0D0UT427H | | XMLEZW-00-0000-0D0UT427F |

| Color | CCT Range | Base Order Codes Min Luminous Flux @ 350 mA | | | Chromaticity Regions | Order Code |
|---|---|---|---|---|---|---|
| | | Group | Flux (lm) @ 85 °C | Flux (lm) @ 25 °C* | | |
| ANSI White | 5000 K | U4 | 340 | 404 | 0E3 | XMLEZW-00-0000-0D00U40E3 |
| | | U5 | 360 | 427 | | XMLEZW-00-0000-0D00U50E3 |
| | | U6 | 380 | 451 | | XMLEZW-00-0000-0D00U60E3 |
| | | V2 | 400 | 475 | | XMLEZW-00-0000-0D00V20E3 |

Notes:

- For Standard CRI parts, typical CRI is 80 for 4000–3500-K CCT parts and typical CRI is 82 for 3000–2700-K CCT.
- Cree maintains a tolerance of ±7% on flux and power measurements, ±0.005 on chromaticity (CCx, CCy) measurements and ±2 on CRI measurements.

* Flux values @ 25 °C are calculated and for reference only.

Copyright © 2011-2013 Cree, Inc. All rights reserved. The information in this document is subject to change without notice. Cree®, the Cree logo and XLamp® are registered trademarks and EasyWhite™ is a trademark of Cree, Inc.

## RELATIVE SPECTRAL POWER DISTRIBUTION (3000-K CCT)

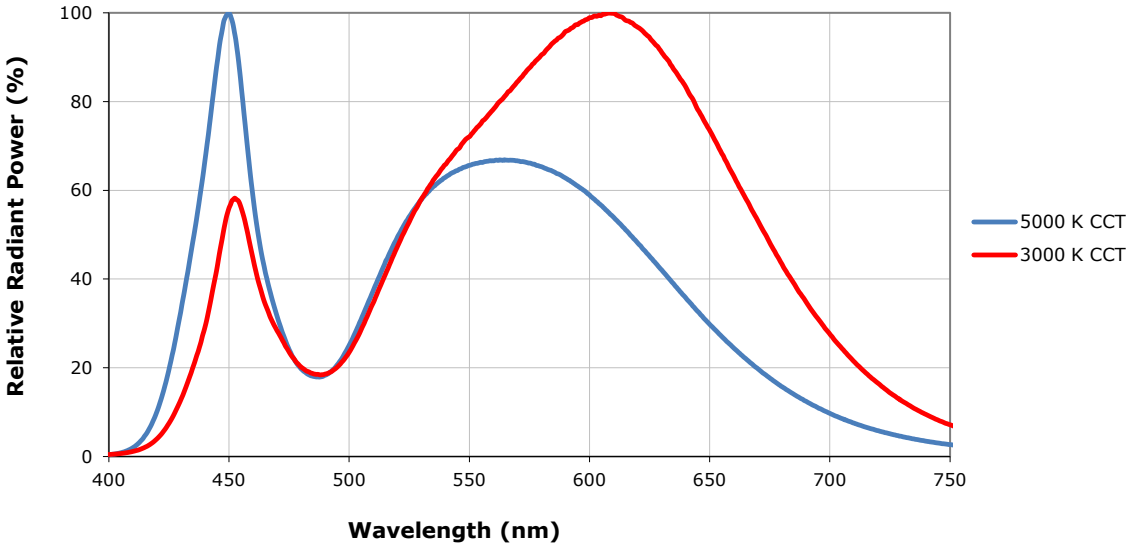


## RELATIVE FLUX VS. JUNCTION TEMPERATURE (6-V - $I_F$ = 700 mA; 12-V - $I_F$ = 350 mA)

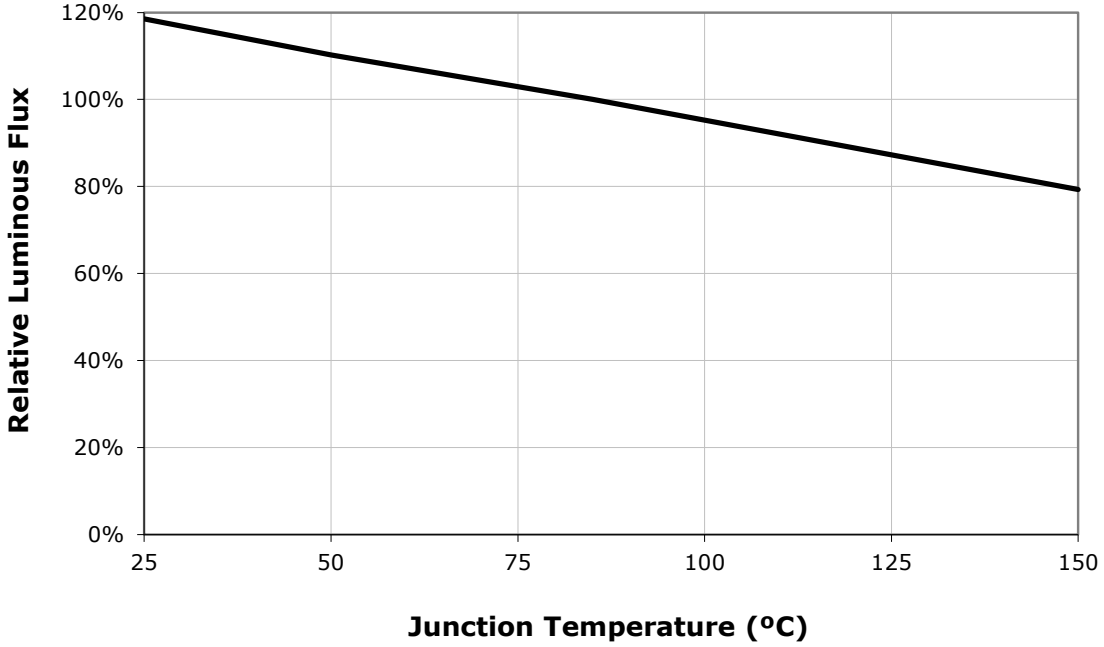


Copyright © 2011-2013 Cree, Inc. All rights reserved. The information in this document is subject to change without notice. Cree®, the Cree logo and XLamp® are registered trademarks and EasyWhite™ is a trademark of Cree, Inc.

## ELECTRICAL CHARACTERISTICS ($T_J$ = 85 °C)

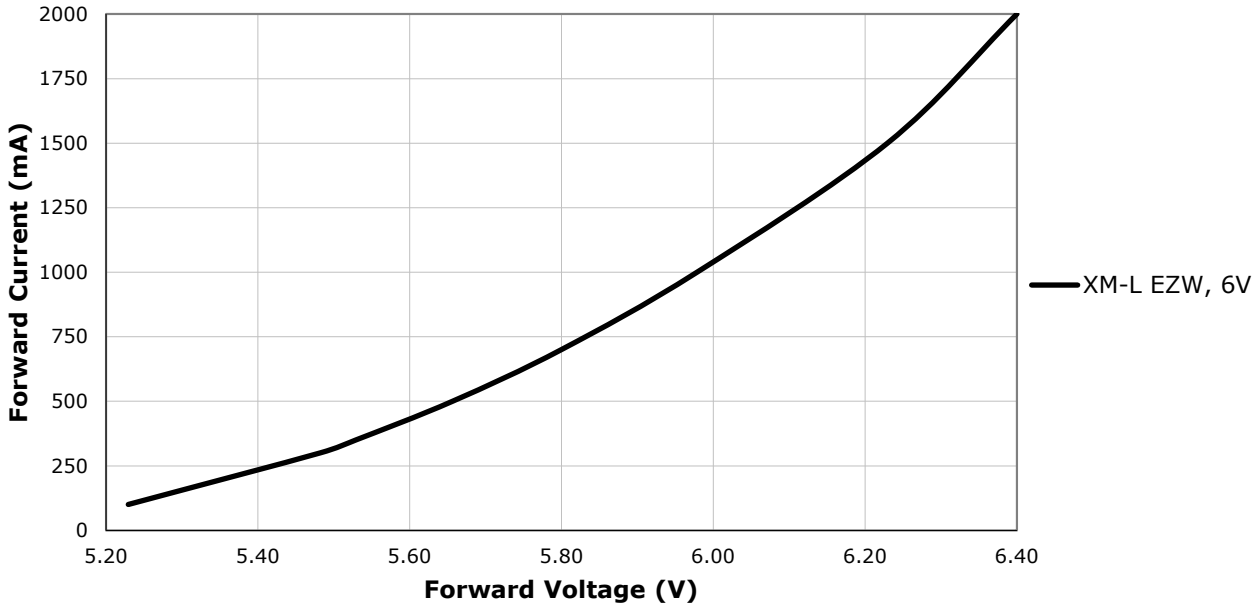


## ELECTRICAL CHARACTERISTICS ($T_J$ = 85 °C) - CONTINUED

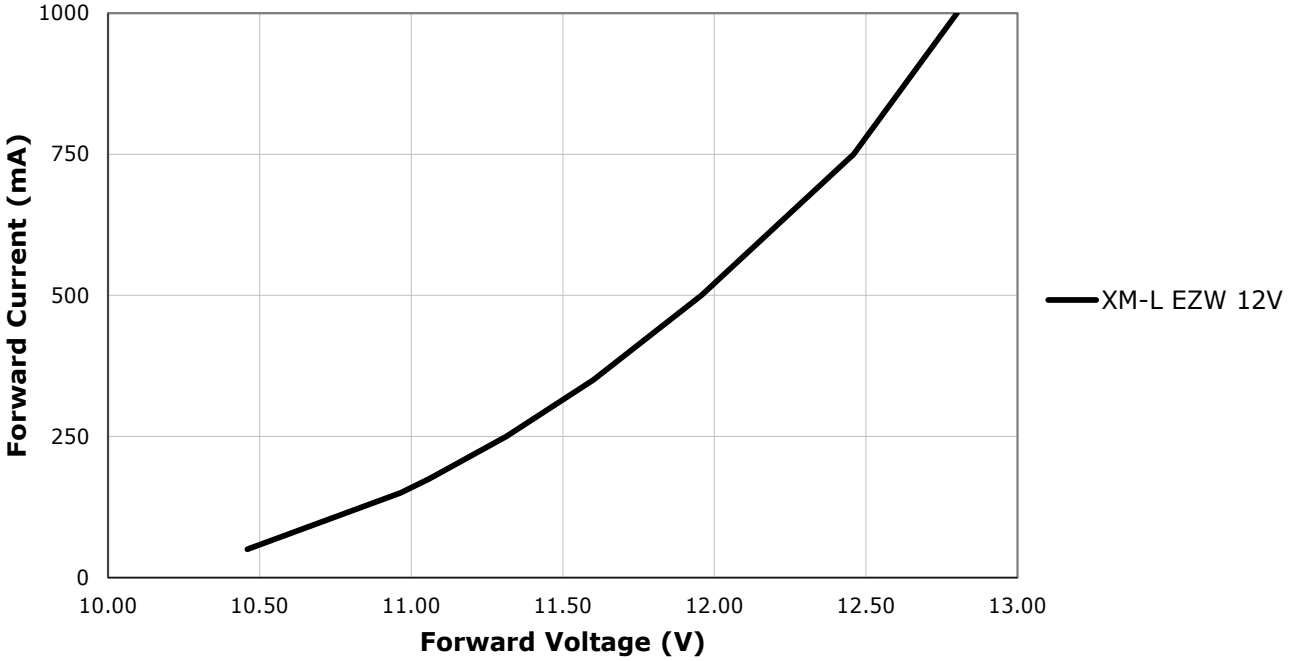


Copyright © 2011-2013 Cree, Inc. All rights reserved. The information in this document is subject to change without notice. Cree®, the Cree logo and XLamp® are registered trademarks and EasyWhite™ is a trademark of Cree, Inc.

## RELATIVE FLUX VS. CURRENT ($T_J$ = 85°C)

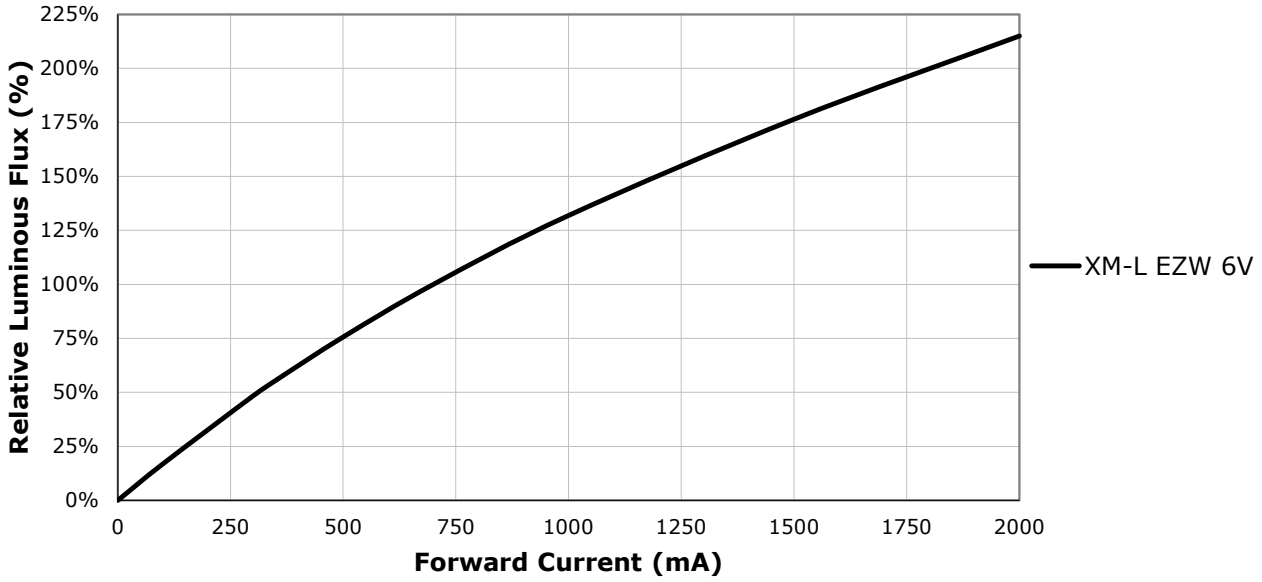


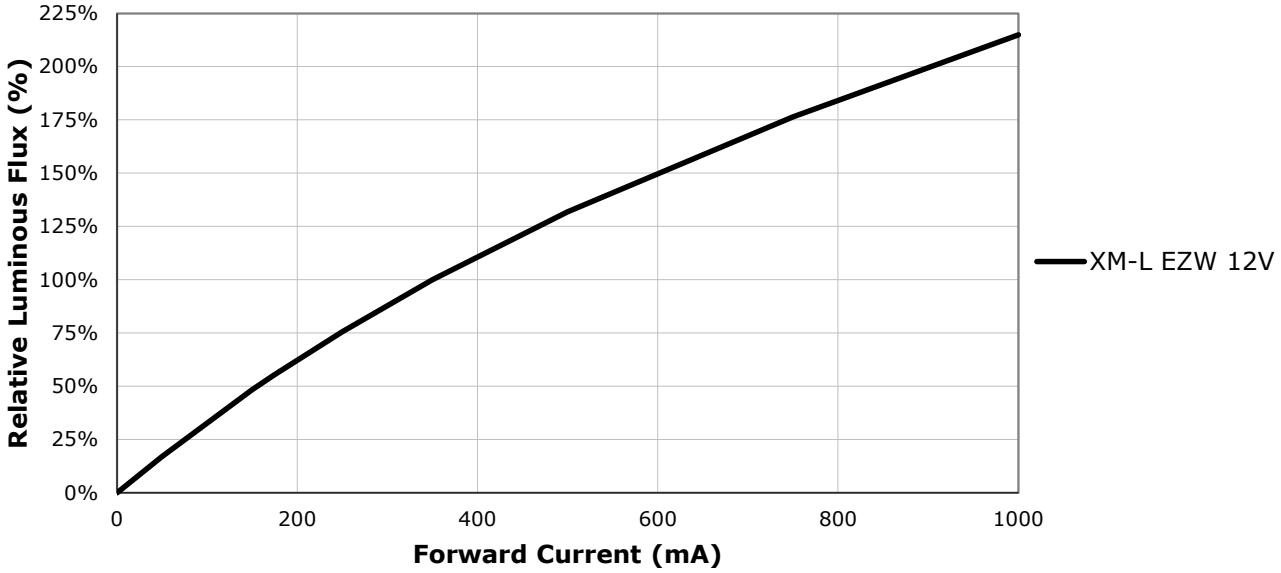


Copyright © 2011-2013 Cree, Inc. All rights reserved. The information in this document is subject to change without notice. Cree®, the Cree logo and XLamp® are registered trademarks and EasyWhite™ is a trademark of Cree, Inc.

## RELATIVE CHROMATICITY VS. CURRENT AND TEMPERATURE

**XM-L EZW 6V**

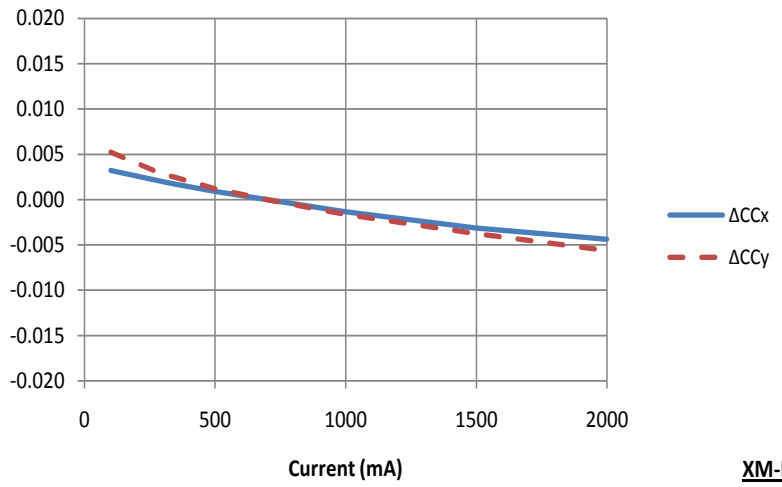


**XM-L EZW 12V**

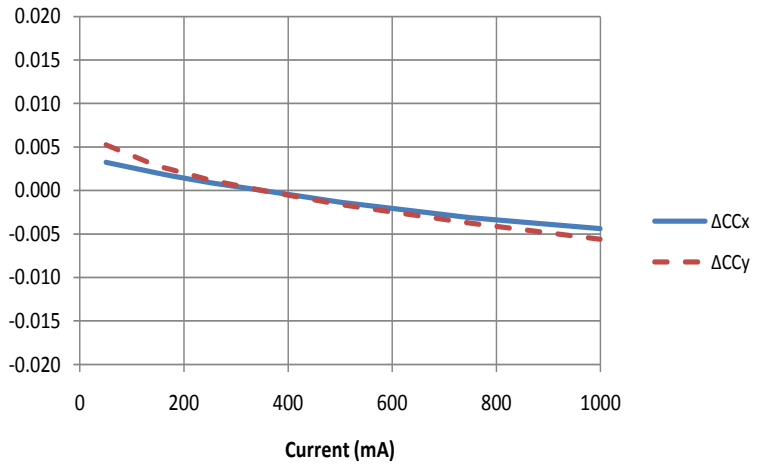


**XM-L EZW, 6V, 12V**

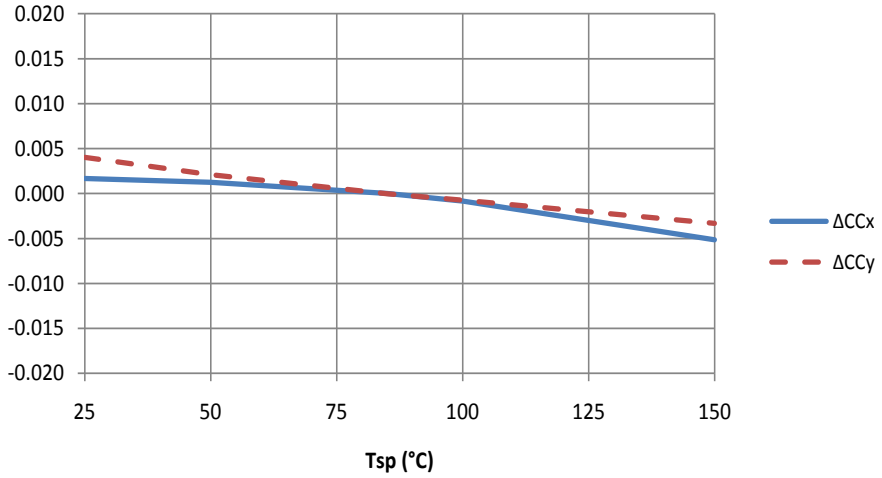


Copyright © 2011-2013 Cree, Inc. All rights reserved. The information in this document is subject to change without notice. Cree®, the Cree logo and XLamp® are registered trademarks and EasyWhite™ is a trademark of Cree, Inc.

## TYPICAL SPATIAL DISTRIBUTION

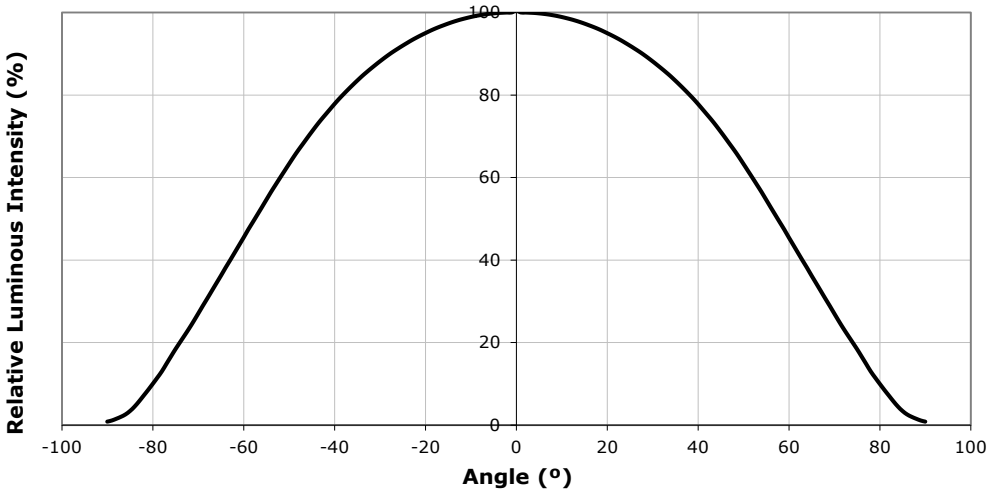


## THERMAL DESIGN

The maximum forward current is determined by the thermal resistance between the LED junction and ambient. It is crucial for the end product to be designed in a manner that minimizes the thermal resistance from the solder point to ambient in order to optimize lamp life and optical characteristics.

**XLamp XM-L EZW, 6-V**

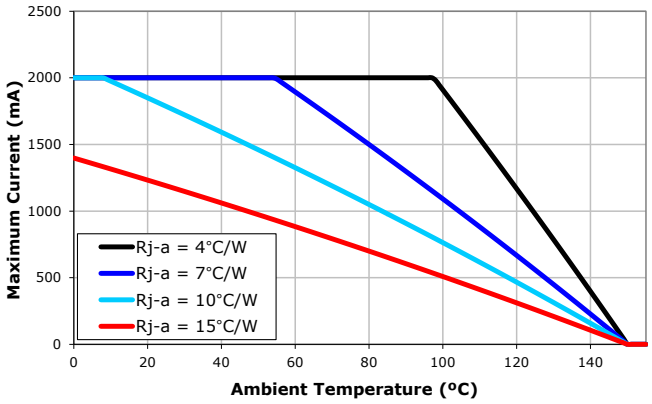


**XLamp XM-L EZW, 12-V**

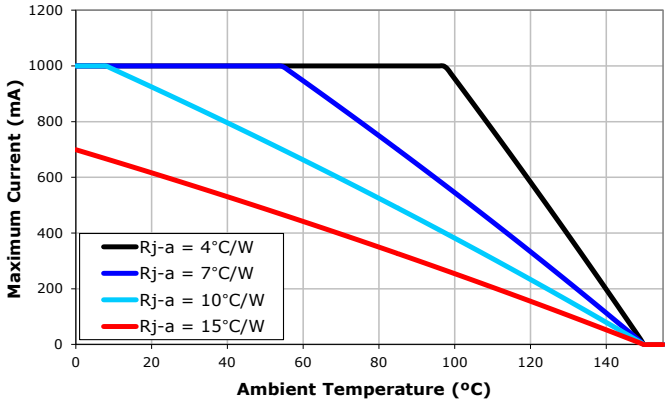


Copyright © 2011-2013 Cree, Inc. All rights reserved. The information in this document is subject to change without notice. Cree®, the Cree logo and XLamp® are registered trademarks and EasyWhite™ is a trademark of Cree, Inc.

## PERFORMANCE GROUPS – BRIGHTNESS ($T_J$ = 85 °C)

XLamp XM-L EasyWhite LEDs are tested for luminous flux and placed into one the following bins.

| Group Code | Min. Luminous Flux @ 700 mA, 6 V (@ 350 mA , 12 V) | Max. Luminous Flux @ 700 mA, 6 V (@ 350 mA, 12 V) |
|---|---|---|
| S6 | 180 | 200 |
| T2 | 200 | 220 |
| T3 | 220 | 240 |
| T4 | 240 | 260 |
| T5 | 260 | 280 |
| T6 | 280 | 300 |
| U2 | 300 | 320 |
| U3 | 320 | 340 |
| U4 | 340 | 360 |
| U5 | 360 | 380 |
| U6 | 380 | 400 |
| V2 | 400 | 420 |

Copyright © 2011-2013 Cree, Inc. All rights reserved. The information in this document is subject to change without notice. Cree®, the Cree logo and XLamp® are registered trademarks and EasyWhite™ is a trademark of Cree, Inc.

## PERFORMANCE GROUPS – CHROMATICITY ($T_J$ = 85 °C)

XLamp XM-L EasyWhite LEDs are tested for chromaticity and placed into one of the regions defined by the following bounding coordinates.

| EasyWhite Color Temperatures – 4-Step | | | |
|---|---|---|---|
| Code | CCT | x | y |
| 50F | 5000K | 0.3407 | 0.3459 |
| | | 0.3415 | 0.3586 |
| | | 0.3499 | 0.3654 |
| | | 0.3484 | 0.3521 |
| 40F | 4000 K | 0.3744 | 0.3685 |
| | | 0.3782 | 0.3837 |
| | | 0.3912 | 0.3917 |
| | | 0.3863 | 0.3758 |
| 35F | 3500 K | 0.3981 | 0.3800 |
| | | 0.4040 | 0.3966 |
| | | 0.4186 | 0.4037 |
| | | 0.4116 | 0.3865 |
| 30F | 3000 K | 0.4242 | 0.3919 |
| | | 0.4322 | 0.4096 |
| | | 0.4449 | 0.4141 |
| | | 0.4359 | 0.3960 |
| 27F | 2700 K | 0.4475 | 0.3994 |
| | | 0.4573 | 0.4178 |
| | | 0.4695 | 0.4207 |
| | | 0.4589 | 0.4021 |

| EasyWhite Color Temperatures – 2-Step | | | |
|---|---|---|---|
| Code | CCT | x | y |
| 50H | 5000K | 0.3429 | 0.3507 |
| | | 0.3434 | 0.3571 |
| | | 0.3475 | 0.3604 |
| | | 0.3469 | 0.3539 |
| 40H | 4000 K | 0.3784 | 0.3741 |
| | | 0.3804 | 0.3818 |
| | | 0.3867 | 0.3857 |
| | | 0.3844 | 0.3778 |
| 35H | 3500 K | 0.4030 | 0.3857 |
| | | 0.4061 | 0.3941 |
| | | 0.4132 | 0.3976 |
| | | 0.4099 | 0.3890 |
| 30H | 3000 K | 0.4291 | 0.3973 |
| | | 0.4333 | 0.4062 |
| | | 0.4395 | 0.4084 |
| | | 0.4351 | 0.3994 |
| 27H | 2700 K | 0.4528 | 0.4046 |
| | | 0.4578 | 0.4138 |
| | | 0.4638 | 0.4152 |
| | | 0.4586 | 0.4060 |

| ANSI White Bins | | | | |
|---|---|---|---|---|
| Code | CCT | Bin Code | x | y |
| 0E3 | 5000K | 3A0 | .3371 | .3490 |
| | | | .3451 | .3554 |
| | | | .3440 | .3427 |
| | | | .3366 | .3369 |
| | | 3B0 | .3376 | .3616 |
| | | | .3463 | .3687 |
| | | | .3451 | .3554 |
| | | | .3371 | .3490 |
| | | 3C0 | .3463 | .3687 |
| | | | .3551 | .3760 |
| | | | .3533 | .3620 |
| | | | .3451 | .3554 |
| | | 3D0 | .3451 | .3554 |
| | | | .3533 | .3620 |
| | | | .3515 | .3487 |
| | | | .3440 | .3427 |

Copyright © 2011-2013 Cree, Inc. All rights reserved. The information in this document is subject to change without notice. Cree®, the Cree logo and XLamp® are registered trademarks and EasyWhite™ is a trademark of Cree, Inc.

## CREE EASYWHITE BINS PLOTTED ON THE 1931 CIE COLOR SPACE ($T_J$ = 85 °C)

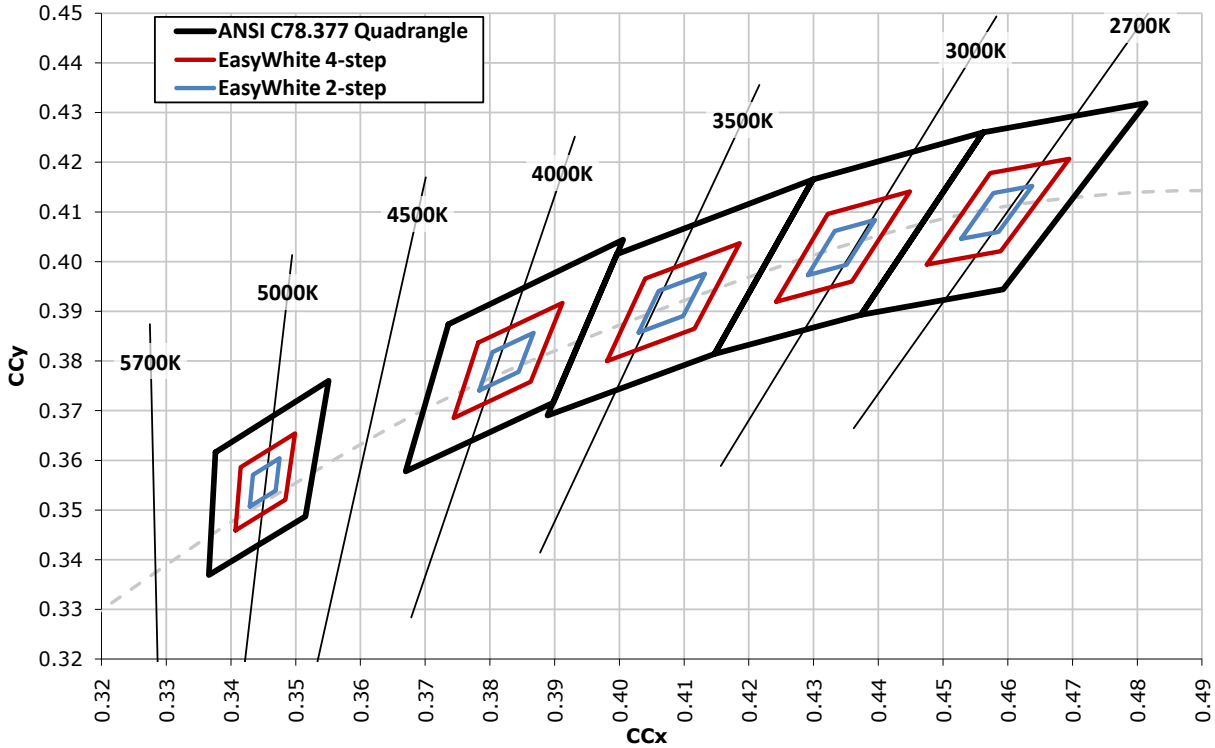


## CREE ANSI WHITE BINS PLOTTED ON THE 1931 CIE COLOR SPACE ($T_J$=85 °C)

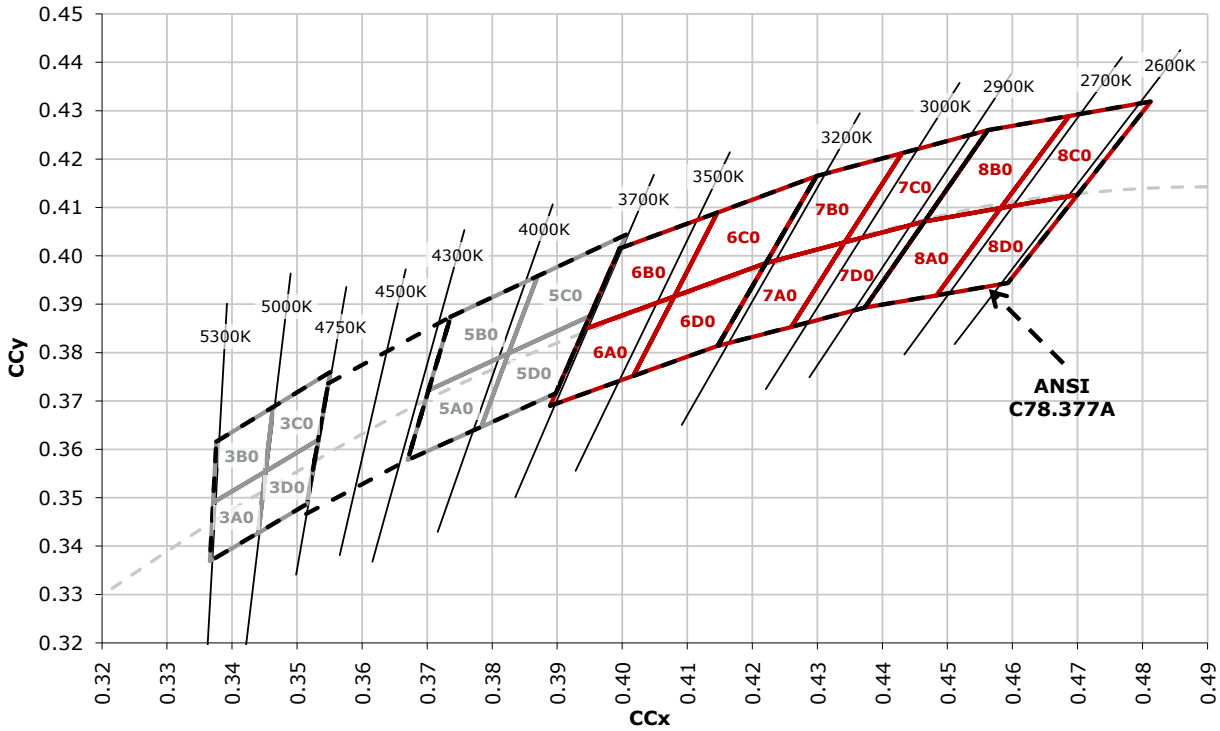


Copyright © 2011-2013 Cree, Inc. All rights reserved. The information in this document is subject to change without notice. Cree®, the Cree logo and XLamp® are registered trademarks and EasyWhite™ is a trademark of Cree, Inc.

## BIN AND ORDER CODE FORMAT

Bin codes and order codes are configured as follows:

**Order Code**

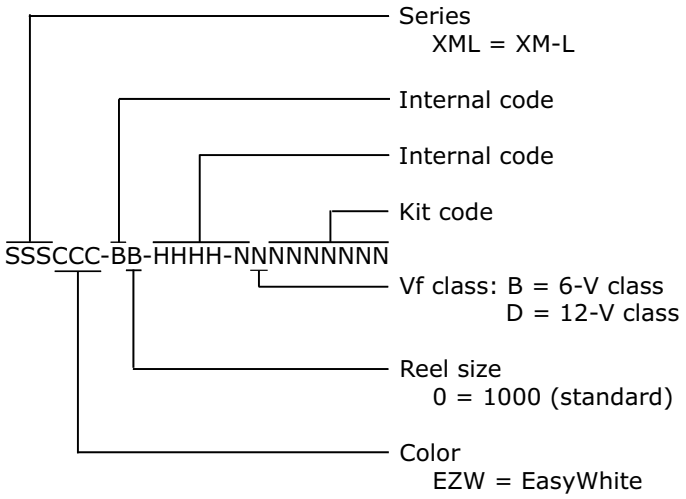


**Bin Code**

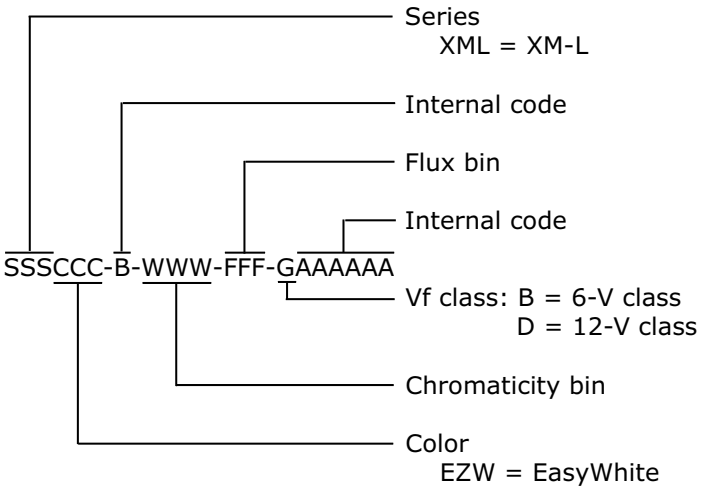


Copyright © 2011-2013 Cree, Inc. All rights reserved. The information in this document is subject to change without notice. Cree®, the Cree logo and XLamp® are registered trademarks and EasyWhite™ is a trademark of Cree, Inc.

## REFLOW SOLDERING CHARACTERISTICS

In testing, Cree has found XLamp XM-L LEDs to be compatible with JEDEC J-STD-020C, using the parameters listed below. As a general guideline, Cree recommends that users follow the recommended soldering profile provided by the manufacturer of solder paste used.

Note that this general guideline may not apply to all PCB designs and configurations of reflow soldering equipment.

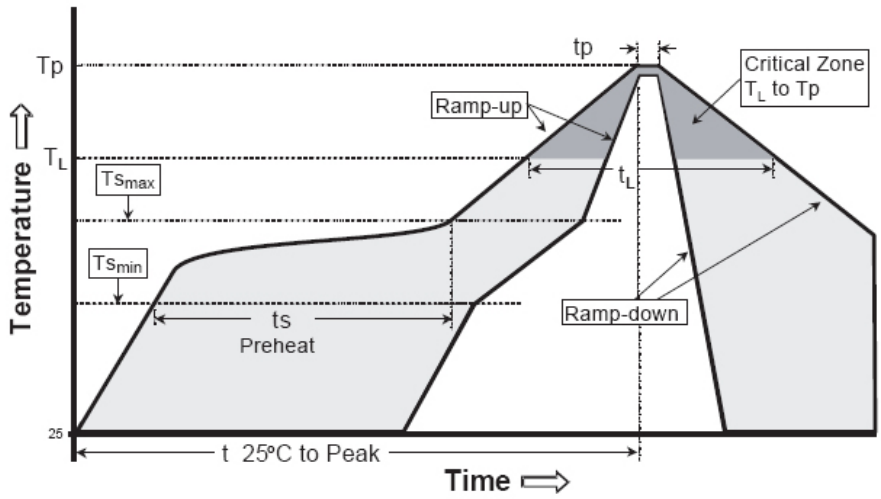


IPC/JEDEC J-STD-020C

| Profile Feature | Lead-Based Solder | Lead-Free Solder |
|---|---|---|
| Average Ramp-Up Rate ($Ts_{max}$ to Tp) | 3 °C/second max. | 3 °C/second max. |
| Preheat: Temperature Min ($Ts_{min}$) | 100 °C | 150 °C |
| Preheat: Temperature Max ($Ts_{max}$) | 150 °C | 200 °C |
| Preheat: Time ($ts_{min}$ to $ts_{max}$) | 60-120 seconds | 60-180 seconds |
| Time Maintained Above: Temperature ($T_L$) | 183 °C | 217 °C |
| Time Maintained Above: Time ($t_L$) | 60-150 seconds | 60-150 seconds |
| Peak/Classification Temperature (Tp) | 215 °C | 260 °C |
| Time Within 5 °C of Actual Peak Temperature (tp) | 10-30 seconds | 20-40 seconds |
| Ramp-Down Rate | 6 °C/second max. | 6 °C/second max. |
| Time 25 °C to Peak Temperature | 6 minutes max. | 8 minutes max. |

Note: All temperatures refer to the topside of the package, measured on the package body surface.

Copyright © 2011-2013 Cree, Inc. All rights reserved. The information in this document is subject to change without notice. Cree®, the Cree logo and XLamp® are registered trademarks and EasyWhite™ is a trademark of Cree, Inc.

## NOTES

### Lumen Maintenance Projections

Cree now uses standardized IES LM-80-08 and TM-21-11 methods for collecting long-term data and extrapolating LED lumen maintenance. For information on the specific LM-80 data sets available for this LED, refer to the public LM-80 results document at www.cree.com/xlamp_app_notes/LM80_results.

Please consult the XLamp Long-Term Lumen Maintenance application note at www.cree.com/xlamp_app_notes/lumen_maintenance for more details on Cree's lumen maintenance testing and forecasting. Please read the XLamp Thermal Management application note at www.cree.com/xlamp_app_notes/thermal_management for details on how thermal design, ambient temperature, and drive current affect the LED junction temperature.

### Moisture Sensitivity

In testing, Cree has found XLamp XM-L LEDs to have unlimited floor life in conditions ≤30 ºC/85% relative humidity (RH). Moisture testing included a 168-hour soak at 85 ºC/85% RH followed by 3 reflow cycles, with visual and electrical inspections at each stage.

Cree recommends keeping XLamp LEDs in their sealed moisture-barrier packaging until immediately prior to use. Cree also recommends returning any unused LEDS to the resealable moisture-barrier bag and closing the bag immediately after use.

### RoHS Compliance

The levels of RoHS restricted materials in this product are below the maximum concentration values (also referred to as the threshold limits) permitted for such substances, or are used in an exempted application, in accordance with EU Directive 2011/65/EC (RoHS2), as amended through June 8, 2011. RoHS Declarations for this product can be obtain from your Cree representative or obtained from the Product Ecology section of www.cree.com.

### UL Recognized Component

Level 4 enclosure consideration. The LED package or a portion thereof has been investigated as a fire and electrical enclosure per ANSI/UL 8750.

### Vision Advisory Claim

WARNING. Do not look at exposed lamp in operation. Eye injury can result. For more information about LEDs and eye safety, please refer to the Cree LED Eye Safety application note at www.cree.com/xlamp_app_notes/led_eye_safety.

Copyright © 2011-2013 Cree, Inc. All rights reserved. The information in this document is subject to change without notice. Cree®, the Cree logo and XLamp® are registered trademarks and EasyWhite™ is a trademark of Cree, Inc.

## MECHANICAL DIMENSIONS

All measurements are ±.13 mm unless otherwise indicated.

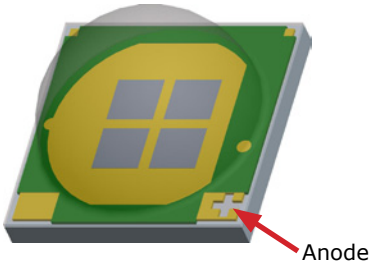


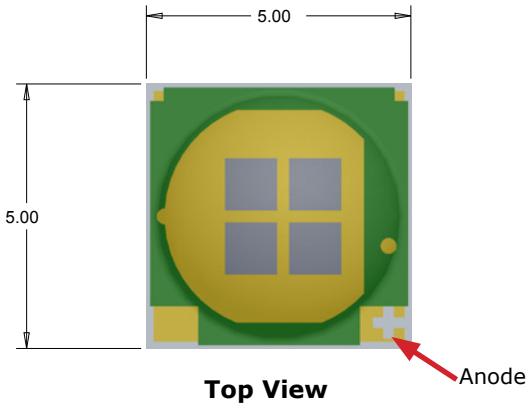


**Top View**

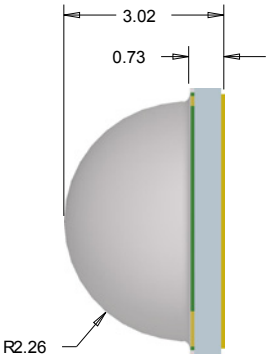


**Side View**

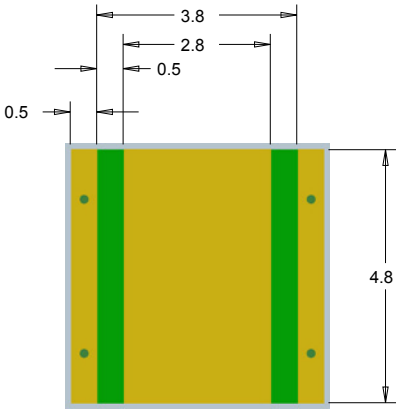


**Bottom View**

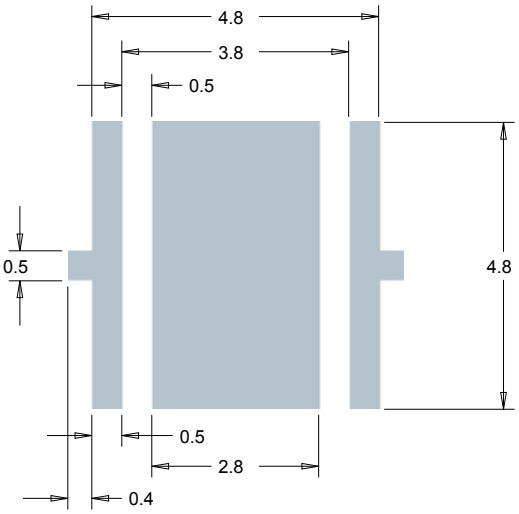


**Recommended PCB Solder Pad**

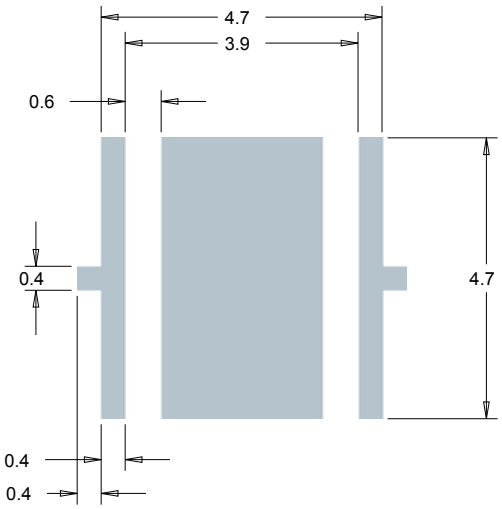


**Recommended Stencil Pattern (Shaded Area Is Open)**

Copyright © 2011-2013 Cree, Inc. All rights reserved. The information in this document is subject to change without notice. Cree®, the Cree logo and XLamp® are registered trademarks and EasyWhite™ is a trademark of Cree, Inc.

## TAPE AND REEL

All Cree carrier tapes conform to EIA-481D, Automated Component Handling Systems Standard.

All dimensions in mm.

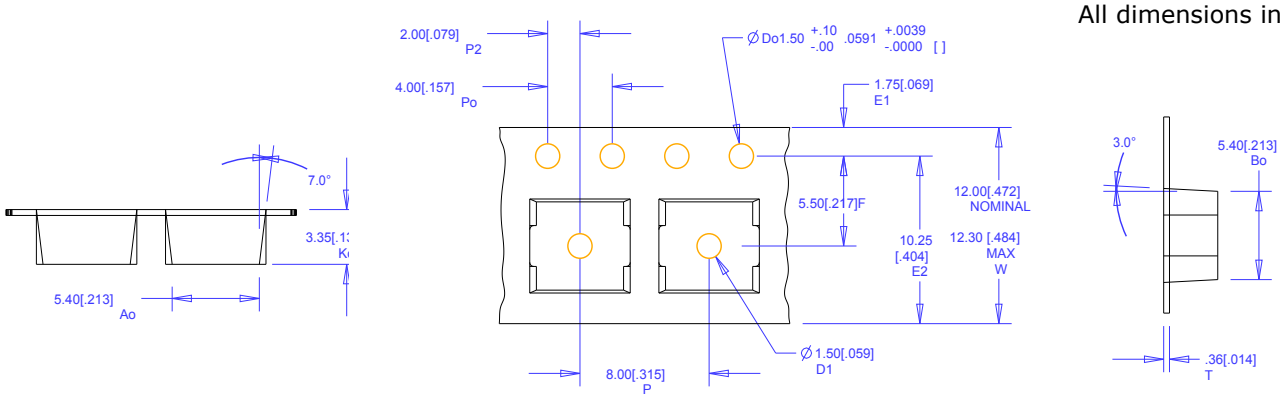


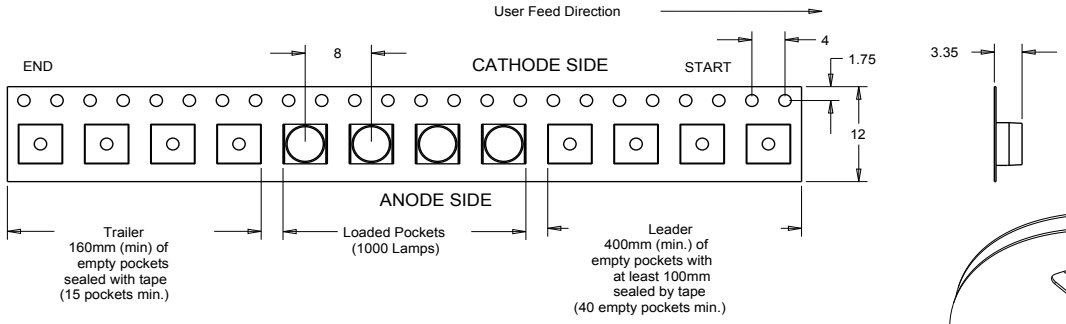





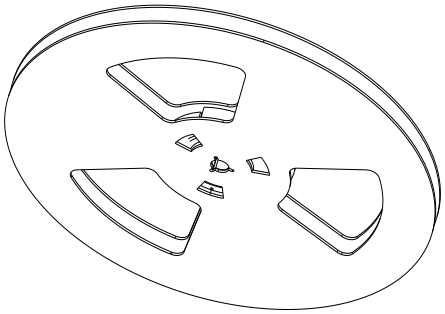

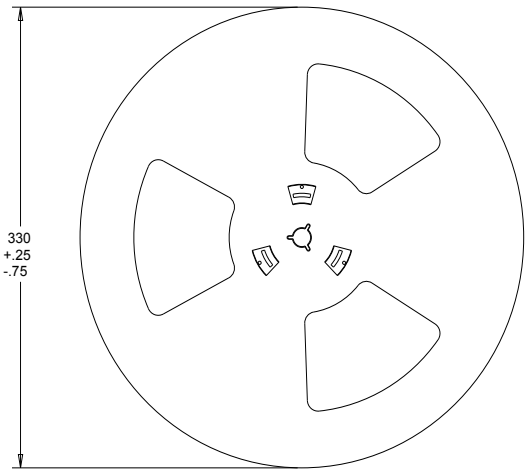


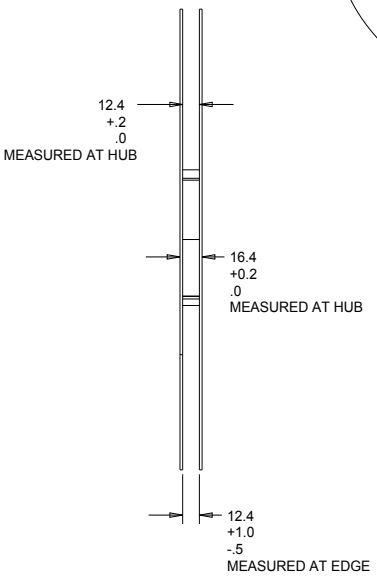


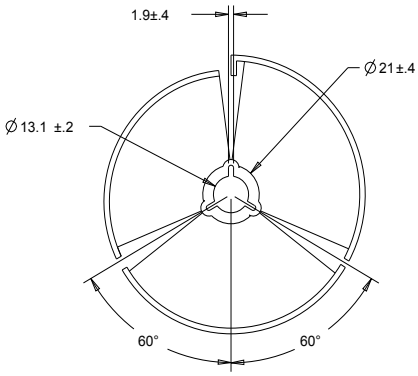


Copyright © 2011-2013 Cree, Inc. All rights reserved. The information in this document is subject to change without notice. Cree®, the Cree logo and XLamp® are registered trademarks and EasyWhite™ is a trademark of Cree, Inc.

## PACKAGING

**Unpackaged Reel**

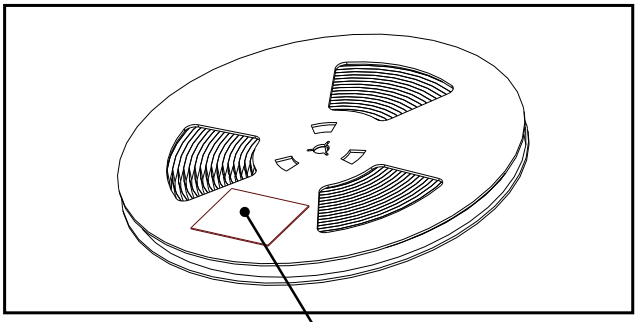


**Packaged Reel**

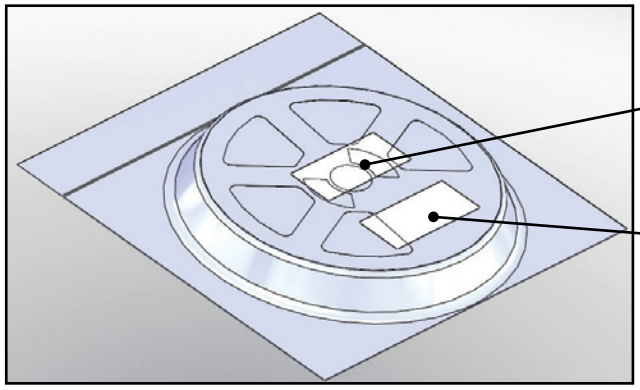


**Boxed Reel**

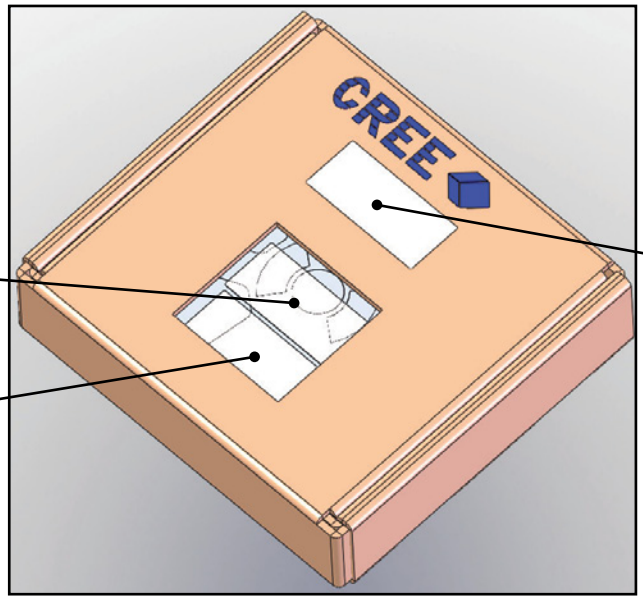


Copyright © 2011-2013 Cree, Inc. All rights reserved. The information in this document is subject to change without notice. Cree®, the Cree logo and XLamp® are registered trademarks and EasyWhite™ is a trademark of Cree, Inc.

Мы молодая и активно развивающаяся компания в области поставок электронных компонентов. Мы поставляем электронные компоненты отечественного и импортного производства напрямую от производителей и с крупнейших складов мира.

Благодаря сотрудничеству с мировыми поставщиками мы осуществляем комплексные и плановые поставки широчайшего спектра электронных компонентов.

Собственная эффективная логистика и склад в обеспечивает надежную поставку продукции в точно указанные сроки по всей России.

Мы осуществляем техническую поддержку нашим клиентам и предпродажную проверку качества продукции. На все поставляемые продукты мы предоставляем гарантию .

Осуществляем поставки продукции под контролем ВП МО РФ на предприятия военно-промышленного комплекса России , а также работаем в рамках 275 ФЗ с открытием отдельных счетов в уполномоченном банке. Система менеджмента качества компании соответствует требованиям ГОСТ ISO 9001.

Минимальные сроки поставки, гибкие цены, неограниченный ассортимент и индивидуальный подход к клиентам являются основой для выстраивания долгосрочного и эффективного сотрудничества с предприятиями радиоэлектронной промышленности, предприятиями ВПК и научно-исследовательскими институтами России.

С нами вы становитесь еще успешнее!

**Наши контакты:**

**Телефон:** +7 812 627 14 35

**Электронная почта:** sales@st-electron.ru

**Адрес:** 198099, Санкт-Петербург, Промышленная ул, дом № 19, литера Н, помещение 100-Н Офис 331