Surge Protection Module

LED Lighting Surge Protection Module > LSP05

LSP05 Module Series

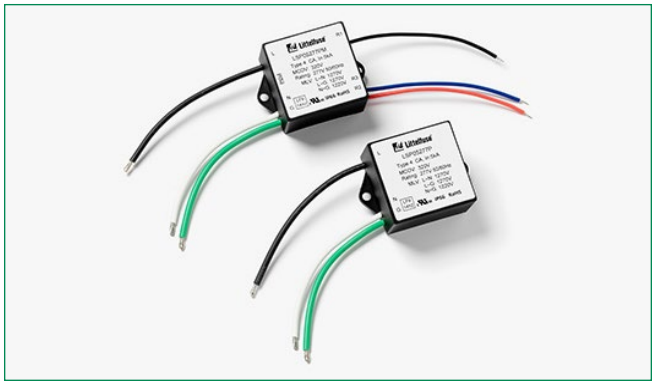

Description

The Littelfuse LSP05 thermally protected Surge Protective Device is a self-protected device which is specially designed to be used in outdoor and commercial LED lighting fixtures for transient overvoltage protection. It is constructed with Littelfuse thermally protected varistor technology. Its built-in thermal disconnect function provides additional protection to prevent catastrophic failure and fire hazard even under the extreme circumstances of varistor end-of-life or sustaining over voltage conditions. The LSP05 facilitates customer's product compliance to IEEE C62.41.2 Location Category C Low and US Dept of Energy MSSLC Model Spec.

Agency Approvals

Agency	Standard	Agency File Number
c UL us	UL1449	E320116

Applications

- Outdoor and Commercial LED Lighting
- Roadway lighting
- Traffic lighting
- Digital signage
- Wash wall lighting
- Parking garage/lot lighting
- Flood lighting
- Tunnel lighting
- Street lighting

Additional Information

Datasheet | Resources | Samples

Features

- Maximum Discharge Current, 10kA, 8/20us
- Meets ANSI C82.77-5-2015: Location Category CM, 10kV/5kA, 1.2/50µS-8/20µS Combination Wave.
- Meets IEEE C62.41.2: Location Category CLow, 6kV/3kA, 1.2/50µS-8/20µS Combination Wave.
- Meets US Dept. of Energy MSSLC Model Spec.
- Parallel connected SPD device
- Thermally protected Varistor technology
- IP66 Water-proof and Dust-proof
- Indication wire lead options for Parallel connected modules
- UL 1449 Type 4 Component Assembly Recognition (Type 4CA)
- IEC61643-11 Class II/ EN61643-11 Type 2 Compliant[1]
- Compact form factor (48x48x30mm) with mounting tabs
- 240Vac and 277Vac voltage ratings are available for Class I and Class II installation based on IEC luminaire protection classes
- CE - Meets the requirements of Low Voltage and RoHS European Directives.

Notes:
1. Self-declared compliance.

Absolute Maximum Ratings

• For ratings of individual members of a series, see Device Ratings and Specifications chart

	LSP05 Series	Units
Continous		
Steady State Applied Voltage:		
Max AC Voltage Range ($V_{M(AC)RMS}$)	150 to 510	V
Transient		
Maximum Discharge Current 8/20µs Waveform (Imax)	10,000	A
Nominal Discharge Current 8/20µs Waveform (I_n)	5,000	A
Operating Ambient Temperature Range (T_A)	-45 to +85	°C
Storage Temperature Range (T_{STG})	-45 to +125	°C
Isolation Voltage Capability (When the thermal disconnect opens)	600	V
Insulation Resistance	>1,000	MΩ

CAUTION: Stresses above those listed in "Absolute Maximum Ratings" may cause permanent damage to the device. This is a stress only rating and operation of the device at these or any other conditions above those indicated in the operational sections of this specification is not implied.

© 2019 Littelfuse, Inc.
Specifications are subject to change without notice.
Revised: 11/04/19

LSP05 Series Device Ratings & Specifications

Part Number[7]	Operating Voltage (VAC)	MCOV/Uc (VAC)[5]	Maximum Discharge Current (Imax)(A)[2]	Nominal Discharge Current (In)(A)[1]	MLV (V)[3]	Up (V)[4]	Safety Compliance	
							IEC/EN 61643-11[6]	UL1449
LSP05120*	120	150	10,000	5,000	L-N:680 L-G:680 N-G:630	800		X
LSP05240*	240	275	10,000	5,000	L-N:1070 L-G:1050 N-G:1020	1200	X	X
LSP05277*	277	320	10,000	5,000	L-N:1260 L-G:1280 N-G:1220	1400	X	X
LSP05347*	347	420	10,000	5,000	L-N:1590 L-G:1590 N-G:1570	1700		X
LSP05480*	480	510	10,000	5,000	L-N:1780 L-G:1800 N-G:1740	1900		X
LSP05240LL*	L-L:240	L-L:275	10,000	5,000	L-L:1070	L-L:1200		X
	L-N/G:120	L-N/G:150			L-N/G:680	L-N/G:800		X
LSP05480LL*	L-L:480	L-L:510	10,000	5,000	L-L:1780	L-L:1900		X
	L-N/G:277	L-N/G:320			L-N/G:1280	L-N/G:1400		X

Notes:
1. Nominal Discharge Current (In)(A): The nominal discharge current is a measure of the SPDs endurance capability; 15 impulses of discharge current uses the 8/20us current waveform.
2. Maximum Discharge Current (Imax)(A): The maximum discharge current is a measure of the SPDs maximum capability; single impulse of discharge current uses the 8/20us current waveform.
3. MLV – UL1449 Measured limiting voltage; the highest value of residual voltage measurements during the application of impulses of 8/20us nominal discharge current (In); an average voltage value of 15 impulses
4. Up – IEC 61643-11 Voltage protection level; the highest value of residual voltage measurements during the application of impulses of 8/20us nominal discharge current (In); a rounding voltage value of maximum measurement.
5. MCOV/UC: Maximum Continuous Operating Voltage - maximum r.m.s. voltage that could be continuously applied to the SPD.
6. Part Numbers LSP05xxxPM Only.
7. * = - P or PM
8. Repetitive Surge Withstanding: 15 strikes at 5,000A (8/20us) with steady MLV/Up.

Figure 1. Repetitive Surge Capability for LSP05

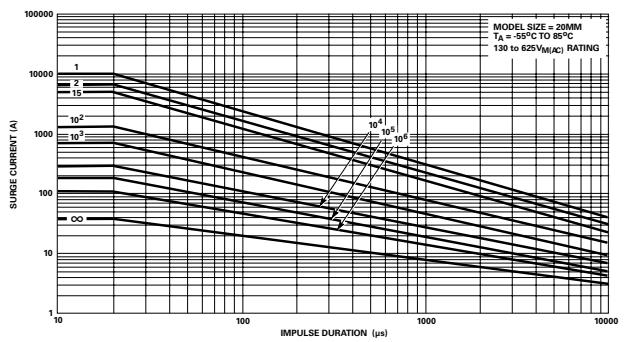

FIGURE 10.

Pulse Rating (8x20µSec)	
Strikes	Surge
1	10,000A
2	7,000A
15	5,000A
100	1,500A
1,000	700A

© 2019 Littelfuse, Inc.
Specifications are subject to change without notice.

Dimensions

Typical Dimensions (mm)

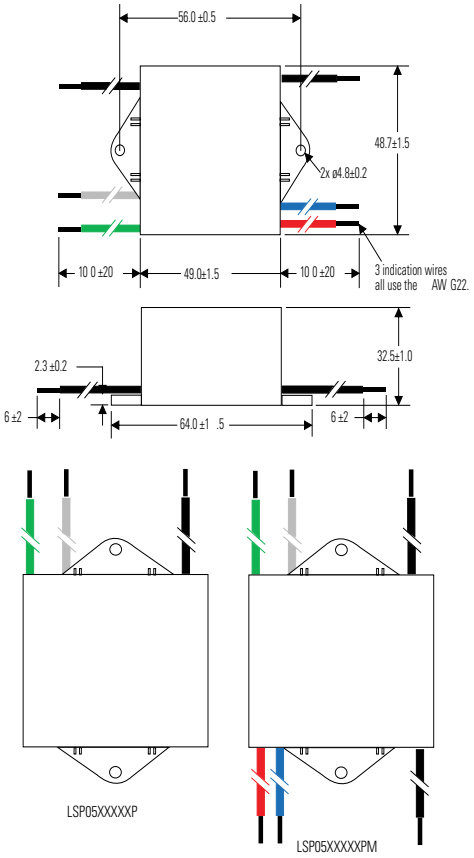

Notes:

1. Black: Line; White: Neutral; Green: Ground (P/N with suffix X3333/X3316: Brown: Line; Blue: Neutral; Green-Yellow stripe: Ground)
2. Black: R1; Red: R2; Blue: R3
3. Wire Gauge: AWG16 wire Line in, AWG22 Wire for indication; Wire Length: 100mm or customized

Part Numbering System

LSP 05 480LL P Xxxxx

Device F amily
Lit telfuse Surge P rotection Module

Nominal Disc har ge Cur rent (In)

Oper ating Vo ltag e

Connection mode
LL: fo r L,L,N/G
Blank: L -N, L -G, N-G

P or PM
(P: parallel connection; PM: parallel connection and with monitor indication wire)

Other non-standar d option:
X3333: with GND wire connection, av ailable fo r 240V ac and 277V ac rating with CE Marking fo r Class I earthed inst allatio n
W ire Color: Line: Bro wn, Neutral: Blue, Ground/P: Green with ye llo w strip e

331 6: without GND wire connection option
Wire Color: Line: Br ow n, Neutral: Blue

Application/Installation Schematic

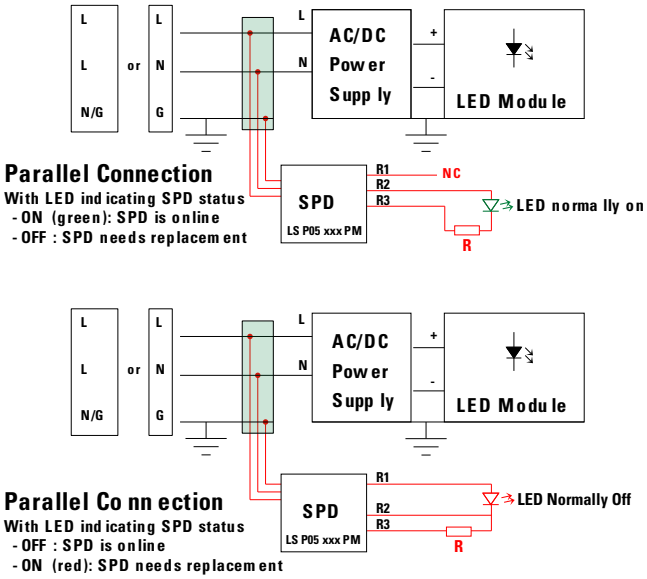

Parallel Connection
With LED ind icating SPD status
- ON (green): SPD is on line
- OFF : SPD needs replacem ent

Parallel Co nn ection
With LED ind icating SPD status
- OFF : SPD is on line
- ON (red): SPD needs replacem ent

Notes:

1. LED indicator and associated circuitry are not included in the module.
2. R1 must be capped off by wire nut when not connected (NC).
3. R1 and R2 are AC line voltage (hot); R3 is AC neutral voltage.
4. R2 voltage is cut off when SPD needs replacement.
5. R is current limiting resistor; it resistance/wattage is determined by AC line voltage and desired current driving LED. Example: AC line voltage 240V, LED: 1.6mA, resistor: 150Kohm/0.5W.

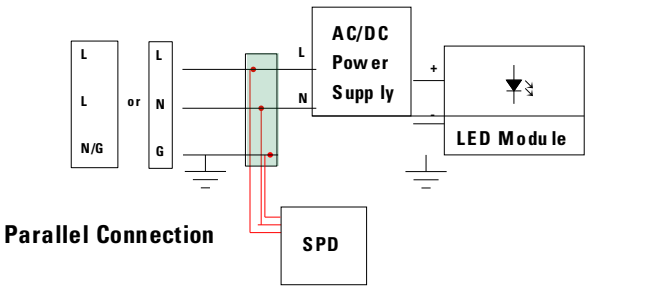

Parallel Connection

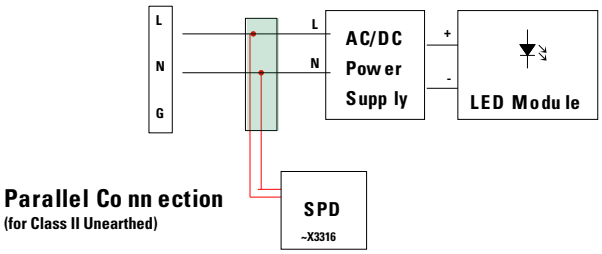

Parallel Co nn ection
(for Class II Unearthed)

Disclaimer Notice - Information furnished is believed to be accurate and reliable. However, users should independently evaluate the suitability of and test each product selected for their own applications. Littelfuse products are not designed for, and may not be used in, all applications. Read complete Disclaimer Notice at http://www.littelfuse.com/disclaimer-electronics.

© 2019 Littelfuse, Inc.
Specifications are subject to change without notice.
Revised: 11/04/19

Мы молодая и активно развивающаяся компания в области поставок электронных компонентов. Мы поставляем электронные компоненты отечественного и импортного производства напрямую от производителей и с крупнейших складов мира.

Благодаря сотрудничеству с мировыми поставщиками мы осуществляем комплексные и плановые поставки широчайшего спектра электронных компонентов.

Собственная эффективная логистика и склад в обеспечивает надежную поставку продукции в точно указанные сроки по всей России.

Мы осуществляем техническую поддержку нашим клиентам и предпродажную проверку качества продукции. На все поставляемые продукты мы предоставляем гарантию .

Осуществляем поставки продукции под контролем ВП МО РФ на предприятия военно-промышленного комплекса России , а также работаем в рамках 275 ФЗ с открытием отдельных счетов в уполномоченном банке. Система менеджмента качества компании соответствует требованиям ГОСТ ISO 9001.

Минимальные сроки поставки, гибкие цены, неограниченный ассортимент и индивидуальный подход к клиентам являются основой для выстраивания долгосрочного и эффективного сотрудничества с предприятиями радиоэлектронной промышленности, предприятиями ВПК и научно-исследовательскими институтами России.

С нами вы становитесь еще успешнее!

Наши контакты:

Телефон: +7 812 627 14 35

Электронная почта: sales@st-electron.ru

Адрес: 198099, Санкт-Петербург, Промышленная ул, дом № 19, литера Н, помещение 100-Н Офис 331