NHD-0216HZ-FL-YBW-C

Character Liquid Crystal Display Module

NHD-	Newhaven Display
0216-	2 lines x 16 characters
HZ-	Model
F-	Transflective
L-	Yellow/Green LED Backlight
Y-	STN- Yellow/Green
B-	6:00 view
W-	Wide Temperature (-20°C~+70°C)
C-	Temperature Compensation Circuit
	RoHS Compliant

Newhaven Display International, Inc.
2511 Technology Drive, Suite 101
Elgin IL, 60124
Ph: 847-844-8795 Fax: 847-844-8796

www.newhavendisplay.com
nhtech@newhavendisplay.com nhsales@newhavendisplay.com

Document Revision History

Revision	Date	Description	Changed by
0	10/23/2008	Initial Release	-
1	11/13/2009	User Guide Reformat	BE
2	12/8/2009	Backlight info updated	BE
3	1/6/2010	Optical updated	BE
4	6/25/2010	Mechanical drawing, Pin description, Block Diagram update	MP
5	7/15/2010	Side view of pins added to Mechanical Drawing	MC
6	10/29/2010	Mechanical drawing updated	BE
7	1/6/2011	Alternate controller information updated	AK
8	3/8/2011	Pins removed from drawing	BE
9	4/19/2011	Electrical characteristics updated	AK
10	11/1/2011	Mechanical drawing updated	BE

Functions and Features

- **2 lines x 16 characters**
- **Built-in controller (ST7066U)**
- **+5.0V Power Supply**
- **1/16 duty, 1/5 bias**
- **RoHS compliant**

Mechanical Drawing

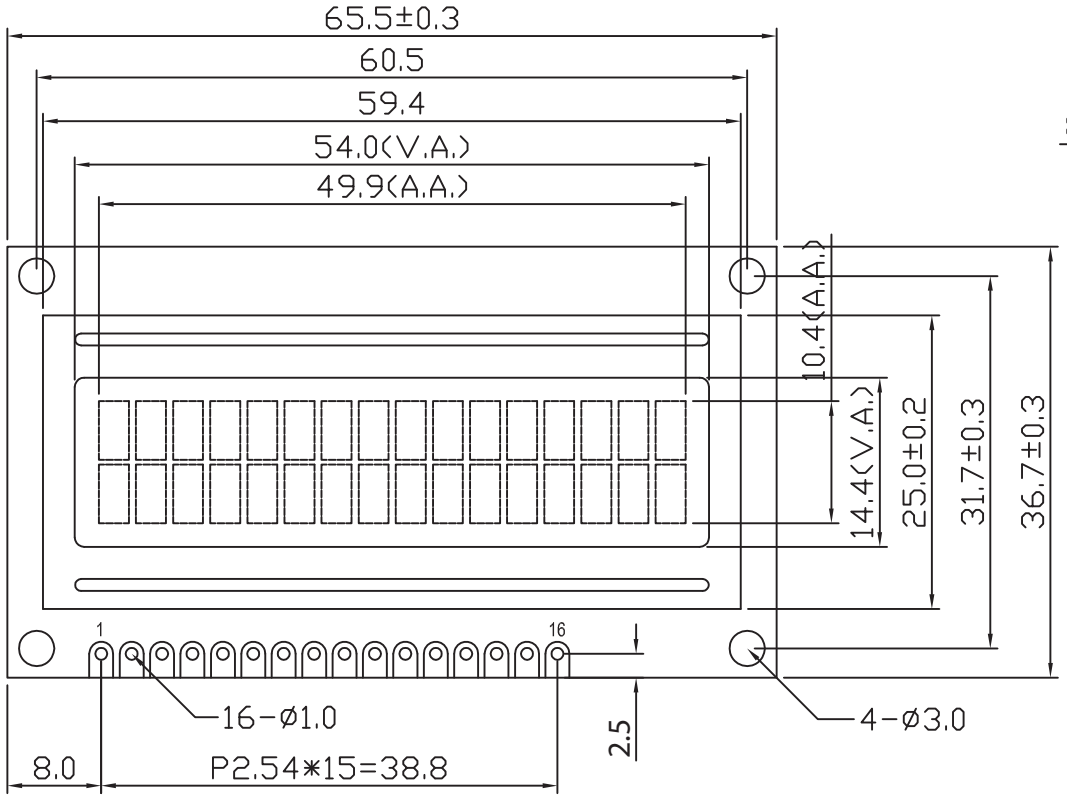

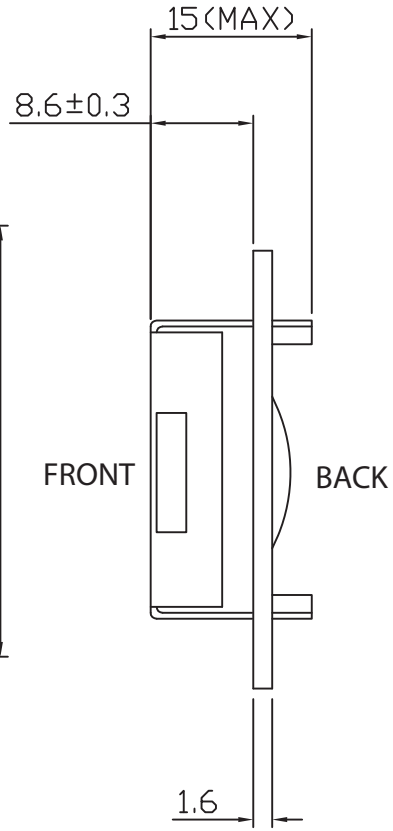

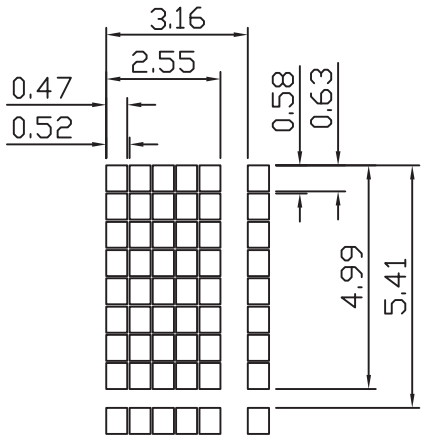

PIN ASSIGNMENT

1	VSS
2	VDD
3	NC
4	RS
5	R/W
6	E
7	DB0
8	DB1
9	DB2
10	DB3
11	DB4
12	DB5
13	DB6
14	DB7
15	LED+
16	LED-

Notes:

1). Driver Method: 1/16duty, 1/5bias, VDD5.0V VLCD4.4V
2). Display Type: STN Y/G /Positive/Transflective
3). Operating Temp: -20°C~70°C
4). Storage Temp: -30°C~80°C
5). BKL: Yellow-Green/4.2V/90mA
6). Temperature Gradient for LCD power supply
7). RoHS Compliant

Newhaven Display

Part No.	NHD-0216HZ-FL-YBW-C

Pin Description and Wiring Diagram

Pin No.	Symbol	External Connection	Function Description
1	VSS	Power Supply	Ground
2	VDD	Power Supply	Supply Voltage for logic (+5.0V)
3	NC	NC	No connect
4	RS	MPU	Register select signal. RS=0: Command, RS=1: Data
5	R/W	MPU	Read/Write select signal, R/W=1: Read R/W: =0: Write
6	E	MPU	Operation enable signal. Falling edge triggered.
7-10	DB0 – DB3	MPU	Four low order bi-directional three-state data bus lines. These four are not used during 4-bit operation.
11-14	DB4 – DB7	MPU	Four high order bi-directional three-state data bus lines.
15	LED+	Power Supply	Power supply for LED Backlight (+4.2V)
16	LED-	Power Supply	Ground for Backlight

Recommended LCD connector: 2.54mm pitch pins
Backlight connector: --- **Mates with:** ---

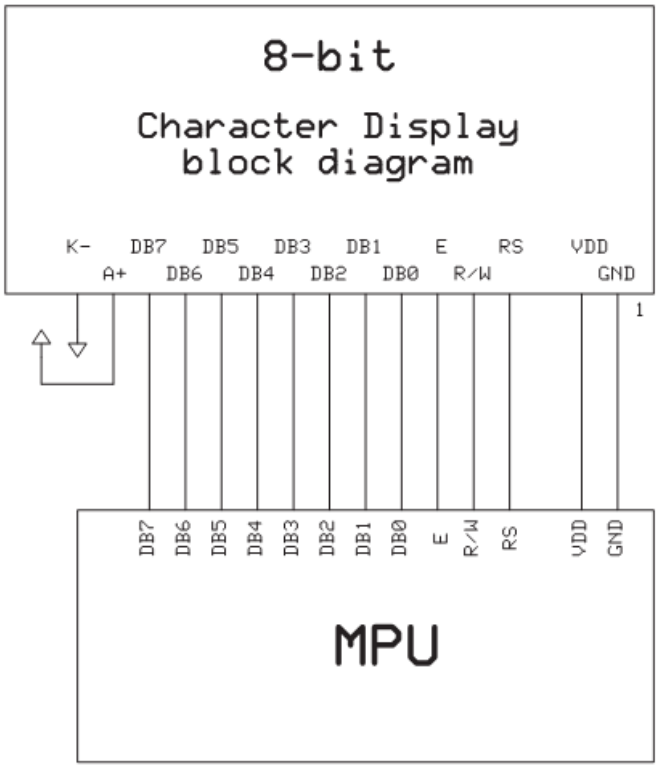

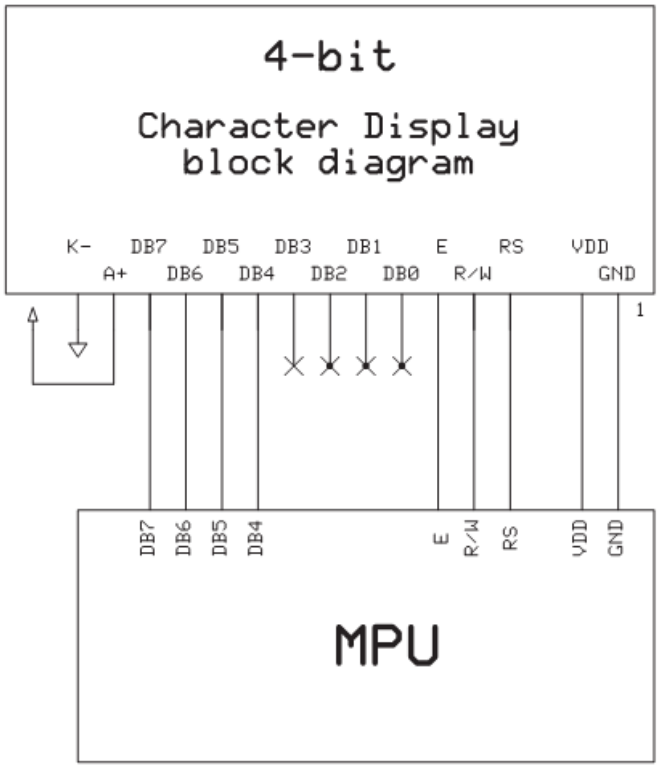

Electrical Characteristics

Item	Symbol	Condition	Min.	Typ.	Max.	Unit
Operating Temperature Range	Top	Absolute Max	-20	-	+70	^{o}C
Storage Temperature Range	Tst	Absolute Max	-30	-	+80	^{o}C
Supply Voltage	VDD		4.7	5.0	5.5	V
Supply Current	IDD	Ta=25°C, VDD=5.0V	-	1.5	2.5	mA
Supply for LCD (contrast)	VDD-V0	Ta=25°C	-	4.4	-	V
"H" Level input	Vih		0.7 VDD	-	VDD	V
"L" Level input	Vil		0	-	0.6	V
"H" Level output	Voh		3.9	-	-	V
"L" Level output	Vol		-	-	0.4	V
Backlight Supply Voltage	Vled	-	-	4.2	4.6	V
Backlight Supply Current	Iled	Vled=4.2V	-	90	130	mA

Optical Characteristics

Item	Symbol	Condition	Min.	Typ.	Max.	Unit
Viewing Angle – Vertical (top)	AV	Cr ≥ 2	-	25	-	^{o}
Viewing Angle – Vertical (bottom)	AV	Cr ≥ 2	-	70	-	^{o}
Viewing Angle – Horizontal (left)	AH	Cr ≥ 2	-	30	-	^{o}
Viewing Angle – Horizontal (right)	AH	Cr ≥ 2	-	30	-	^{o}
Contrast Ratio	Cr		-	2	-	-
Response Time (rise)	Tr	-	-	120	150	ms
Response Time (fall)	Tf	-	-	120	150	ms

Controller Information

Built-in ST7066U. Download specification at http://www.newhavendisplay.com/app_notes/ST7066U.pdf

Display character address code:

1	2	3	4	5	6	7	8	9	10	11	12	13	14	15	16
00	01	02	03	04	05	06	07	08	09	0A	0B	0C	0D	0E	0F
40	41	42	43	44	45	46	47	48	49	4A	4B	4C	4D	4E	4F

Command Table

Instruction	Instruction Code										Description	Description Time (270KHz)
	RS	R/W	DB7	DB6	DB5	DB4	DB3	DB2	DB1	DB0		
Clear Display	0	0	0	0	0	0	0	0	0	1	Write "20H" to DDRAM. and set DDRAM address to "00H" from AC	1.52 ms
Return Home	0	0	0	0	0	0	0	0	1	x	Set DDRAM address to "00H" from AC and return cursor to its original position if shifted. The contents of DDRAM are not changed.	1.52 ms
Entry Mode Set	0	0	0	0	0	0	0	1	I/D	S	Sets cursor move direction and specifies display shift. These operations are performed during data write and read.	37 us
Display ON/OFF	0	0	0	0	0	0	1	D	C	B	D=1:entire display on C=1:cursor on B=1:cursor position on	37 us
Cursor or Display Shift	0	0	0	0	0	1	S/C	R/L	x	x	Set cursor moving and display shift control bit, and the direction, without changing DDRAM data.	37 us
Function Set	0	0	0	0	1	DL	N	F	x	x	DL:interface data is 8/4 bits N:number of line is 2/1 F:font size is 5x11/5x8	37 us
Set CGRAM address	0	0	0	1	AC5	AC4	AC3	AC2	AC1	AC0	Set CGRAM address in address counter	37 us
Set DDRAM address	0	0	1	AC6	AC5	AC4	AC3	AC2	AC1	AC0	Set DDRAM address in address counter	37 us
Read Busy flag and address	0	1	BF	AC6	AC5	AC4	AC3	AC2	AC1	AC0	Whether during internal operation or not can be known by reading BF. The contents of address counter can also be read.	0 us
Write data to RAM	1	0	D7	D6	D5	D4	D3	D2	D1	D0	Write data into internal RAM (DDRAM/CGRAM)	37 us
Read data from RAM	1	1	D7	D6	D5	D4	D3	D2	D1	D0	Read data from internal RAM (DDRAM/CGRAM)	37 us

Built-in Font Table

Lower 4 Bits \ Upper 4 Bits	0000	0001	0010	0011	0100	0101	0110	0111	1000	1001	1010	1011	1100	1101	1110	1111
xxxx0000	CG RAM (1)			0	@	P	`	p				ー	タ	ミ	α	p
xxxx0001	(2)		!	1	A	Q	a	q			。	ア	チ	ム	ä	q
xxxx0010	(3)		"	2	B	R	b	r			「	イ	ツ	メ	ß	θ
xxxx0011	(4)		#	3	C	S	c	s			」	ウ	テ	モ	ε	∞
xxxx0100	(5)		$	4	D	T	d	t			、	エ	ト	ヤ	μ	Ω
xxxx0101	(6)		%	5	E	U	e	u			・	オ	ナ	ユ	σ	ü
xxxx0110	(7)		&	6	F	V	f	v			ヲ	カ	ニ	ヨ	ρ	Σ
xxxx0111	(8)		'	7	G	W	g	w			ァ	キ	ヌ	ラ	g	π
xxxx1000	(1)		(	8	H	X	h	x			ィ	ク	ネ	リ	√	x̄
xxxx1001	(2)		)	9	I	Y	i	y			ゥ	ケ	ノ	ル	-1	y
xxxx1010	(3)		*	:	J	Z	j	z			ェ	コ	ハ	レ	j	¥
xxxx1011	(4)		+	;	K	[	k	{			ォ	サ	ヒ	ロ	×	万
xxxx1100	(5)		,	<	L	¥	l	|			ャ	シ	フ	ワ	¢	円
xxxx1101	(6)		-	=	M	]	m	}			ュ	ス	ヘ	ン	£	÷
xxxx1110	(7)		.	>	N	^	n	→			ョ	セ	ホ	゛	ñ	
xxxx1111	(8)		/	?	O	_	o	←			ッ	ソ	マ	゜	ö	■

Example Initialization Program

8-bit Initialization:

```
/*********************************************************/
void command(char i)
{
      P1 = i;                       //put data on output Port
      D_I =0;                       //D/I=LOW : send instruction
      R_W =0;                       //R/W=LOW : Write
      E  = 1;
      Delay(1);                     //enable pulse width  >= 300ns
        E  = 0;                     //Clock enable: falling edge
}
/*********************************************************/
void write(char i)
{
      P1 = i;                       //put data on output Port
      D_I =1;                       //D/I=LOW : send data
      R_W =0;                       //R/W=LOW : Write
      E  = 1;
      Delay(1);                     //enable pulse width  >= 300ns
      E  = 0;                       //Clock enable: falling edge
}
/*********************************************************/
void init()
{
      E = 0;
      Delay(100);                   //Wait >15 msec after power is applied
      command(0x30);                //command 0x30 = Wake up
      Delay(30);                    //must wait 5ms, busy flag not available
      command(0x30);                //command 0x30 = Wake up #2
      Delay(10);                    //must wait 160us, busy flag not available
      command(0x30);                //command 0x30 = Wake up #3
      Delay(10);                    //must wait 160us, busy flag not available
      command(0x38);                //Function set: 8-bit/2-line
      command(0x10);                //Set cursor
      command(0x0c);                //Display ON; Cursor ON
      command(0x06);                //Entry mode set
}
/*********************************************************/
```

4-bit Initialization:

```
/*********************************************************/
void command(char i)
{
      P1 = i;                       //put data on output Port
      D_I =0;                       //D/I=LOW : send instruction
      R_W =0;                       //R/W=LOW : Write
      Nybble();                     //Send lower 4 bits
      i = i<<4;                     //Shift over by 4 bits
      P1 = i;                       //put data on output Port
      Nybble();                     //Send upper 4 bits
}
/*********************************************************/
void write(char i)
{
      P1 = i;                       //put data on output Port
      D_I =1;                       //D/I=HIGH : send data
      R_W =0;                       //R/W=LOW : Write
      Nybble();                     //Clock lower 4 bits
      i = i<<4;                     //Shift over by 4 bits
      P1 = i;                       //put data on output Port
      Nybble();                     //Clock upper 4 bits
}
/*********************************************************/
void Nybble()
{
      E = 1;
      Delay(1);                     //enable pulse width  >= 300ns
      E = 0;                        //Clock enable: falling edge
}
/*********************************************************/
void init()
{
      P1 = 0;
      P3 = 0;
      Delay(100);                   //Wait >15 msec after power is applied
      P1 = 0x30;                    //put 0x30 on the output port
      Delay(30);                    //must wait 5ms, busy flag not available
      Nybble();                     //command 0x30 = Wake up
      Delay(10);                    //must wait 160us, busy flag not available
      Nybble();                     //command 0x30 = Wake up #2
      Delay(10);                    //must wait 160us, busy flag not available
      Nybble();                     //command 0x30 = Wake up #3
      Delay(10);                    //can check busy flag now instead of delay
      P1= 0x20;                     //put 0x20 on the output port
      Nybble();                     //Function set: 4-bit interface
      command(0x28);                //Function set: 4-bit/2-line
      command(0x10);                //Set cursor
      command(0x0F);                //Display ON; Blinking cursor
      command(0x06);                //Entry Mode set
}
/*********************************************************/
```

Quality Information

Test Item	Content of Test	Test Condition	Note
High Temperature storage	Endurance test applying the high storage temperature for a long time.	+80°C , 48hrs	2
Low Temperature storage	Endurance test applying the low storage temperature for a long time.	-30°C , 48hrs	1,2
High Temperature Operation	Endurance test applying the electric stress (voltage & current) and the high thermal stress for a long time.	+70°C 48hrs	2
Low Temperature Operation	Endurance test applying the electric stress (voltage & current) and the low thermal stress for a long time.	-20°C , 48hrs	1,2
High Temperature / Humidity Operation	Endurance test applying the electric stress (voltage & current) and the high thermal with high humidity stress for a long time.	+40°C , 90% RH , 48hrs	1,2
Thermal Shock resistance	Endurance test applying the electric stress (voltage & current) during a cycle of low and high thermal stress.	0°C,30min -> 25°C,5min -> 50°C,30min = 1 cycle 10 cycles	
Vibration test	Endurance test applying vibration to simulate transportation and use.	10-55Hz , 15mm amplitude. 60 sec in each of 3 directions X,Y,Z For 15 minutes	3
Static electricity test	Endurance test applying electric static discharge.	VS=800V, RS=1.5kΩ, CS=100pF One time	

Note 1: No condensation to be observed.
Note 2: Conducted after 4 hours of storage at 25°C, 0%RH.
Note 3: Test performed on product itself, not inside a container.

Precautions for using LCDs/LCMs

See Precautions at www.newhavendisplay.com/specs/precautions.pdf

Warranty Information and Terms & Conditions

http://www.newhavendisplay.com/index.php?main_page=terms

Мы молодая и активно развивающаяся компания в области поставок электронных компонентов. Мы поставляем электронные компоненты отечественного и импортного производства напрямую от производителей и с крупнейших складов мира.

Благодаря сотрудничеству с мировыми поставщиками мы осуществляем комплексные и плановые поставки широчайшего спектра электронных компонентов.

Собственная эффективная логистика и склад в обеспечивает надежную поставку продукции в точно указанные сроки по всей России.

Мы осуществляем техническую поддержку нашим клиентам и предпродажную проверку качества продукции. На все поставляемые продукты мы предоставляем гарантию .

Осуществляем поставки продукции под контролем ВП МО РФ на предприятия военно-промышленного комплекса России , а также работаем в рамках 275 ФЗ с открытием отдельных счетов в уполномоченном банке. Система менеджмента качества компании соответствует требованиям ГОСТ ISO 9001.

Минимальные сроки поставки, гибкие цены, неограниченный ассортимент и индивидуальный подход к клиентам являются основой для выстраивания долгосрочного и эффективного сотрудничества с предприятиями радиоэлектронной промышленности, предприятиями ВПК и научно-исследовательскими институтами России.

С нами вы становитесь еще успешнее!

Наши контакты:

Телефон: +7 812 627 14 35

Электронная почта: sales@st-electron.ru

Адрес: 198099, Санкт-Петербург, Промышленная ул, дом № 19, литера Н, помещение 100-Н Офис 331