56F8346/56F8146

Data Sheet

Preliminary Technical Data

56F8300
16-bit Digital Signal Controllers

MC56F8346
Rev. 15
01/2007

freescale.com

freescale™ semiconductor

Document Revision History

Version History	Description of Change
Rev 1.0	Pre-Release version, Alpha customers only
Rev 2.0	Initial Public Release
Rev 3.0	Corrected typo in **Table 10-4**, Flash Endurance is 10,000 cycles. Addressed additional grammar issues.
Rev 4.0	Added “Typical Min” values to **Table 10-16**. Edited grammar, spelling, consistency of language throughout family. Updated values in Current Consumption per Power Supply Pin, **Table 10-7**, Regulator Parameters, **Table 10-9**, External Clock Operation Timing Requirements **Table 10-13**, SPI Timing, **Table 10-18**, ADC Parameters, **Table 10-24**, and IO Loading Coefficients at 10MHz, **Table 10-25**.
Rev 5.0	Added **Part 4.8**. Added the word “access” to FM Error Interrupt in **Table 4-5**. Removed min and max numbers. Clarified CSBAR 0 and CSBAR 1 reset values in **Table 4-10**. Removed min and max numbers, only documenting Typ. numbers for LVI in **Table 10-6**.
Rev 6.0	Updated numbers in **Table 10-7** and **Table 10-8** with more recent data. Corrected typo in **Table 10-3** in Pd characteristics.
Rev 7.0	Replaced any reference to Flash Interface Unit with Flash Memory Module. Added note to V_{CAP} pin in **Table 2-2**. Removed unneccessary notes in **Table 10-12**. Corrected temperature range in **Table 10-14**. Added ADC calibration information to **Table 10-24** and new graphs in **Figure 10-21**.
Rev 8.0	Clarified **Table 10-22**. Corrected Digital Input Current Low (pull-up enabled) numbers in **Table 10-5**. Removed text and Table 10-2. Replaced with note to **Table 10-1**.
Rev 9.0	Added 56F8146 information; edited to indicate differences in 56F8346 and 56F8146. Reformatted for Freescale look and feel. Updated Temperature Sensor and ADC tables, then updated balance of electrical tables for consistency throughout family. Clarified I/O power description in **Table 2-2**, added note to **Table 10-7** and clarified **Section 12.3**.
Rev 10.0	Added output voltage maximum value and note to clarify in **Table 10-1**; also removed overall life expectancy note, since life expectancy is dependent on customer usage and must be determined by reliability engineering. Clarified value and unit measure for Maximum allowed P_D in **Table 10-3**. Corrected note about average value for Flash Data Retention in **Table 10-4**. Added new RoHS-compliant orderable part numbers in **Table 13-1**.
Rev 11.0	Updated **Table 10-24** to reflect new value for maximum Uncalibrated Gain Error
Rev 12.0	Deleted RSTO from Pin Group 2 (listed after **Table 10-1**). Deleted formula for Max Ambient Operating Temperature (Automotive) and Max Ambient Operating Temperature (Industrial) in **Table 10-4**. Added RoHS-compliance and “pb-free” language to back cover.
Rev 13.0	Updated JTAG ID in **Section 6.5.4**. Added information/corrected state during reset in **Table 2-2**. Clarified external reference crystal frequency for PLL in **Table 10-14** by increasing maximum value to 8.4MHz.

Document Revision History (Continued)

Version History	Description of Change
Rev 14.0	Replaced “Tri-stated” with an explanation in State During Reset column in **Table 2-2**
Rev. 15	• Added the following note to the description of the TMS signal in **Table 2-2**: **Note:** Always tie the TMS pin to V_{DD} through a 2.2K resistor. • Added the following note to the description of the $\overline{\text{TRST}}$ signal in **Table 2-2**: **Note:** For normal operation, connect $\overline{\text{TRST}}$ directly to V_{SS}. If the design is to be used in a debugging environment, $\overline{\text{TRST}}$ may be tied to V_{SS} through a 1K resistor.

Please see http://www.freescale.com for the most current data sheet revision.

56F8346/56F8146 General Description

Note: *Features in italics are NOT available in the 56F8146 device.*

- Up to 60 MIPS at 60MHz core frequency
- DSP and MCU functionality in a unified, C-efficient architecture
- Access up to 1MB of off-chip program and data memory
- Chip Select Logic for glueless interface to ROM and SRAM
- 128KB of Program Flash
- *4KB of Program RAM*
- *8KB of Data Flash*
- 8KB of Data RAM
- 8KB of Boot Flash
- Up to two 6-channel PWM Modules
- Four 4-channel, 12-bit ADCs
- *Temperature Sensor*
- Up to two Quadrature Decoders
- Optional On-Chip Regulator
- *FlexCAN module*
- Two Serial Communication Interfaces (SCIs)
- Up to two Serial Peripheral Interfaces (SPIs)
- Up to four general-purpose Quad Timers
- Computer Operating Properly (COP) / Watchdog
- JTAG/Enhanced On-Chip Emulation (OnCE™) for unobtrusive, real-time debugging
- Up to 62 GPIO lines
- 144-pin LQFP Package

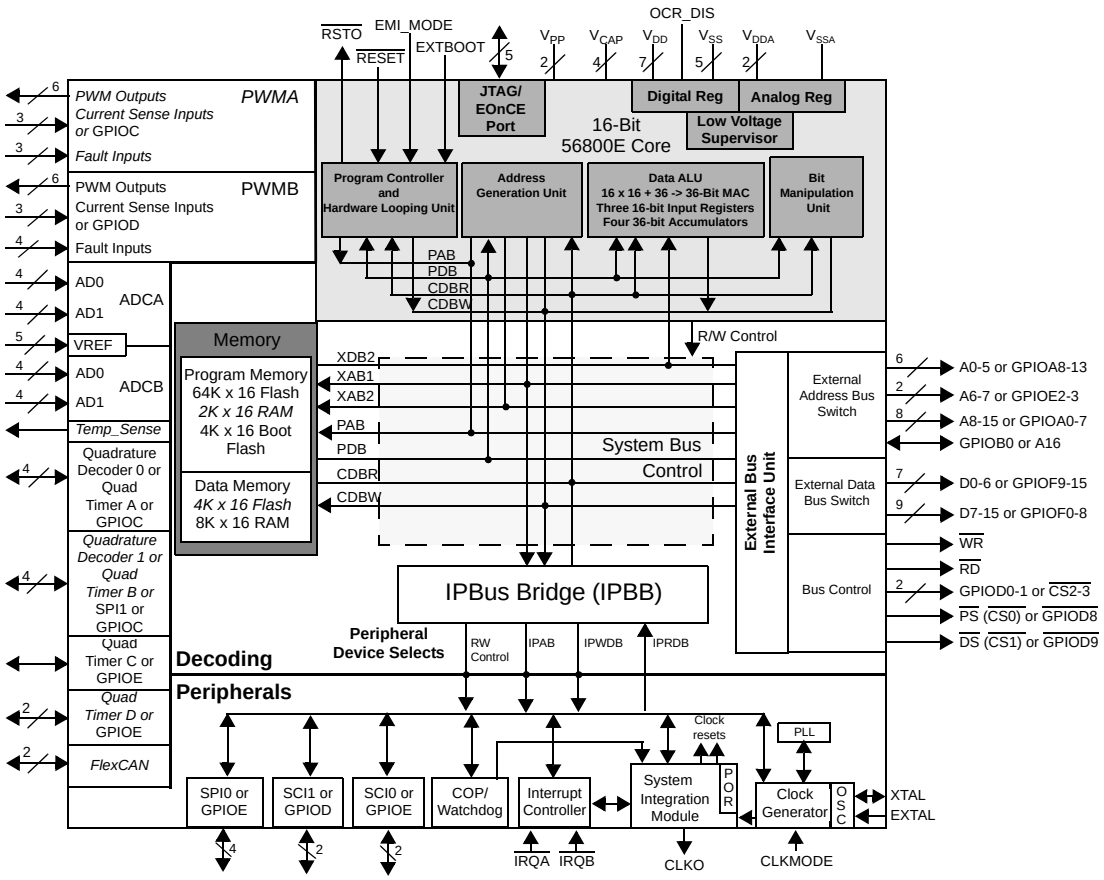

56F8346/56F8146 Block Diagram - 144 LQFP

Table of Contents

Part 1 Overview 7
- 1.1 56F8346/56F8146 Features 7
- 1.2 Device Description 9
- 1.3 Award-Winning Development Environment 11
- 1.4 Architecture Block Diagram 11
- 1.5 Product Documentation 15
- 1.6 Data Sheet Conventions 16

Part 2 Signal/Connection Descriptions 17
- 2.1 Introduction 17
- 2.2 Signal Pins 20

Part 3 On-Chip Clock Synthesis (OCCS) . . . 40
- 3.1 Introduction 40
- 3.2 External Clock Operation 40
- 3.3 Registers 42

Part 4 Memory Map 42
- 4.1 Introduction 42
- 4.2 Program Map 44
- 4.3 Interrupt Vector Table 45
- 4.4 Data Map 49
- 4.5 Flash Memory Map 49
- 4.6 EOnCE Memory Map 51
- 4.7 Peripheral Memory Mapped Registers . . . 52
- 4.8 Factory Programmed Memory 79

Part 5 Interrupt Controller (ITCN) 79
- 5.1 Introduction 79
- 5.2 Features 79
- 5.3 Functional Description 80
- 5.4 Block Diagram 81
- 5.5 Operating Modes 81
- 5.6 Register Descriptions 82
- 5.7 Resets 109

Part 6 System Integration Module (SIM) . . 109
- 6.1 Overview 109
- 6.2 Features 110
- 6.3 Operating Modes 111
- 6.4 Operating Mode Register 111
- 6.5 Register Descriptions 112
- 6.6 Clock Generation Overview 125
- 6.7 Power-Down Modes Overview 125
- 6.8 Stop and Wait Mode Disable Function . . 126
- 6.9 Resets 126

Part 7 Security Features 127
- 7.1 Operation with Security Enabled 127
- 7.2 Flash Access Blocking Mechanisms 127

Part 8 General Purpose Input/Output (GPIO) 130
- 8.1 Introduction 130
- 8.2 Memory Maps 130
- 8.3 Configuration 130

Part 9 Joint Test Action Group (JTAG) . . 136
- 9.1 JTAG Information 136

Part 10 Specifications 136
- 10.1 General Characteristics 136
- 10.2 DC Electrical Characteristics 141
- 10.3 AC Electrical Characteristics 145
- 10.4 Flash Memory Characteristics 145
- 10.5 External Clock Operation Timing 146
- 10.6 Phase Locked Loop Timing 146
- 10.7 Crystal Oscillator Timing 147
- 10.8 External Memory Interface Timing 147
- 10.9 Reset, Stop, Wait, Mode Select, and Interrupt Timing 150
- 10.10 Serial Peripheral Interface (SPI) Timing 152
- 10.11 Quad Timer Timing 157
- 10.12 Quadrature Decoder Timing 157
- 10.13 Serial Communication Interface (SCI) Timing 158
- 10.14 Controller Area Network (CAN) Timing . . 159
- 10.15 JTAG Timing 159
- 10.16 Analog-to-Digital Converter (ADC) Parameters 161
- 10.17 Equivalent Circuit for ADC Inputs 163
- 10.18 Power Consumption 165

Part 11 Packaging 167
- 11.1 56F8346 Package and Pin-Out Information 167
- 11.2 56F8146 Package and Pin-Out Information 169

Part 12 Design Considerations 174
- 12.1 Thermal Design Considerations 174
- 12.2 Electrical Design Considerations 175
- 12.3 Power Distribution and I/O Ring Implementation 176

Part 13 Ordering Information 177

Part 1 Overview

1.1 56F8346/56F8146 Features

1.1.1 Core

- Efficient 16-bit 56800E family controller engine with dual Harvard architecture
- Up to 60 Million Instructions Per Second (MIPS) at 60MHz core frequency
- Single-cycle 16 × 16-bit parallel Multiplier-Accumulator (MAC)
- Four 36-bit accumulators, including extension bits
- Arithmetic and logic multi-bit shifter
- Parallel instruction set with unique DSP addressing modes
- Hardware DO and REP loops
- Three internal address buses
- Four internal data buses
- Instruction set supports both DSP and controller functions
- Controller-style addressing modes and instructions for compact code
- Efficient C compiler and local variable support
- Software subroutine and interrupt stack with depth limited only by memory
- JTAG/EOnCE debug programming interface

1.1.2 Differences Between Devices

Table 1-1 outlines the key differences between the 56F8346 and 56F8146 devices.

Table 1-1 Device Differences

Feature	56F8346	56F8146
Guaranteed Speed	60MHz/60 MIPS	40MHz/40 MIPS
Program RAM	4KB	Not Available
Data Flash	8KB	Not Available
PWM	2 x 6	1 x 6
CAN	1	Not Available
Quad Timer	4	2
Quadrature Decoder	2 x 4	1 x 4
Temperature Sensor	1	Not Available
Dedicated GPIO	—	5

1.1.3 Memory

Note: *Features in italics are NOT available in the 56F8146 device.*

- Harvard architecture permits as many as three simultaneous accesses to program and data memory
- Flash security protection feature
- On-chip memory, including a low-cost, high-volume Flash solution
  - 128KB of Program Flash
  - *4KB of Program RAM*
  - *8KB of Data Flash*
  - 8KB of Data RAM
  - 8KB of Boot Flash
- Off-chip memory expansion capabilities programmable for 0 - 30 wait states
  - Access up to 1MB of program memory or 1MB of data memory
  - Chip select logic for glueless interface to ROM and SRAM
- *EEPROM emulation capability*

1.1.4 Peripheral Circuits

Note: *Features in italics are NOT available in the 56F8146 device.*

- Pulse Width Modulator:
  - In the 56F8346, two Pulse Width Modulator modules, each with six PWM outputs, three Current Sense inputs, and three Fault inputs; fault-tolerant design with dead time insertion; supports both center-aligned and edge-aligned modes
  - In the 56F8146, one Pulse Width Modulator module with six PWM outputs, three Current Sense inputs, and three Fault inputs; fault-tolerant design with dead time insertion; supports both center-aligned and edge-aligned modes
- Four 12-bit, Analog-to-Digital Converters (ADCs), which support four simultaneous conversions with quad, 4-pin multiplexed inputs; ADC and PWM modules can be synchronized through Timer C, channels 2 and 3
- Quadrature Decoder:
  - In the 56F8346, two four-input Quadrature Decoders or two additional Quad Timers
  - In the 56F8146, one four-input Quadrature Decoder, which works in conjunction with Quad Timer A
- *Temperature Sensor diode can be connected, on the board, to any of the ADC inputs to monitor the on-chip temperature*
- Quad Timer:
  - In the 56F8346, four dedicated general-purpose Quad Timers totaling three dedicated pins: Timer C with one pin and Timer D with two pins
  - In the 56F8146, two Quad Timers; Timer A and Timer C both work in conjunction with GPIO
- Optional On-Chip Regulator
- *FlexCAN (CAN Version 2.0 B-compliant) module with 2-pin port for transmit and receive*

- Two Serial Communication Interfaces (SCIs), each with two pins (or four additional GPIO lines)
- Up to two Serial Peripheral Interfaces (SPIs), both with configurable 4-pin port (or eight additional GPIO lines)
  - In the 56F8346, SPI1 can also be used as Quadrature Decoder 1 or Quad Timer B
  - In the 56F8146, SPI1 can alternately be used only as GPIO
- Computer Operating Properly (COP)/Watchdog timer
- Two dedicated external interrupt pins
- 62 General Purpose I/O (GPIO) pins
- External reset input pin for hardware reset
- External reset output pin for system reset
- Integrated low-voltage interrupt module
- JTAG/Enhanced On-Chip Emulation (OnCE) for unobtrusive, processor speed-independent, real-time debugging
- Software-programmable, Phase Lock Loop (PLL)-based frequency synthesizer for the core clock

1.1.5 Energy Information

- Fabricated in high-density CMOS with 5V-tolerant, TTL-compatible digital inputs
- On-board 3.3V down to 2.6V voltage regulator for powering internal logic and memories; can be disabled
- On-chip regulators for digital and analog circuitry to lower cost and reduce noise
- Wait and Stop modes available
- ADC smart power management
- Each peripheral can be individually disabled to save power

1.2 Device Description

The 56F8346 and 56F8146 are members of the 56800E core-based family of controllers. Each combines, on a single chip, the processing power of a Digital Signal Processor (DSP) and the functionality of a microcontroller with a flexible set of peripherals to create an extremely cost-effective solution. Because of its low cost, configuration flexibility, and compact program code, the 56F8346 and 56F8146 are well-suited for many applications. The devices include many peripherals that are especially useful for motion control, smart appliances, steppers, encoders, tachometers, limit switches, power supply and control, *automotive* control (56F8346 only), engine management, noise suppression, remote utility metering, industrial control for power, lighting, and automation applications.

The 56800E core is based on a Harvard-style architecture consisting of three execution units operating in parallel, allowing as many as six operations per instruction cycle. The MCU-style programming model and optimized instruction set allow straightforward generation of efficient, compact DSP and control code. The instruction set is also highly efficient for C/C++ Compilers to enable rapid development of optimized control applications.

The 56F8346 and 56F8146 support program execution from either internal or external memories. Two data operands can be accessed from the on-chip data RAM per instruction cycle. These devices also provide two external dedicated interrupt lines and up to 62 General Purpose Input/Output (GPIO) lines, depending on peripheral configuration.

1.2.1 56F8346 Features

The 56F8346 controller includes 128KB of Program Flash and 8KB of Data Flash (each programmable through the JTAG port) with 4KB of Program RAM and 8KB of Data RAM. It also supports program execution from external memory.

A total of 8KB of Boot Flash is incorporated for easy customer inclusion of field-programmable software routines that can be used to program the main Program and Data Flash memory areas. Both Program and Data Flash memories can be independently bulk erased or erased in pages. Program Flash page erase size is 1KB. Boot and Data Flash page erase size is 512 bytes. The Boot Flash memory can also be either bulk or page erased.

A key application-specific feature of the 56F8346 is the inclusion of two Pulse Width Modulator (PWM) modules. These modules each incorporate three complementary, individually programmable PWM signal output pairs (each module is also capable of supporting six independent PWM functions, for a total of 12 PWM outputs) to enhance motor control functionality. Complementary operation permits programmable dead time insertion, distortion correction via current sensing by software, and separate top and bottom output polarity control. The up-counter value is programmable to support a continuously variable PWM frequency. Edge-aligned and center-aligned synchronous pulse width control (0% to 100% modulation) is supported. The device is capable of controlling most motor types: ACIM (AC Induction Motors); both BDC and BLDC (Brush and Brushless DC motors); SRM and VRM (Switched and Variable Reluctance Motors); and stepper motors. The PWMs incorporate fault protection and cycle-by-cycle current limiting with sufficient output drive capability to directly drive standard optoisolators. A “smoke-inhibit”, write-once protection feature for key parameters is also included. A patented PWM waveform distortion correction circuit is also provided. Each PWM is double-buffered and includes interrupt controls to permit integral reload rates to be programmable from 1 to 16. The PWM modules provide reference outputs to synchronize the Analog-to-Digital Converters through two channels of Quad Timer C.

The 56F8346 incorporates two Quadrature Decoders capable of capturing all four transitions on the two-phase inputs, permitting generation of a number proportional to actual position. Speed computation capabilities accommodate both fast- and slow-moving shafts. An integrated watchdog timer in the Quadrature Decoder can be programmed with a time-out value to alert when no shaft motion is detected. Each input is filtered to ensure only true transitions are recorded.

This controller also provides a full set of standard programmable peripherals that include two Serial Communications Interfaces (SCIs); two Serial Peripheral Interfaces (SPIs); and four Quad Timers. Any of these interfaces can be used as General Purpose Input/Outputs (GPIOs) if that function is not required. A Flex Controller Area Network (FlexCAN) interface (CAN Version 2.0 B-compliant) and an internal interrupt controller are a part of the 56F8346.

1.2.2 56F8146 Features

The 56F8146 hybrid controller includes 128KB of Program Flash, programmable through the JTAG port, with 8KB of Data RAM. It also supports program execution from external memory.

A total of 8KB of Boot Flash is incorporated for easy customer inclusion of field-programmable software routines that can be used to program the main Program Flash memory area, which can be independently bulk erased or erased in pages. Program Flash page erase size is 1KB. Boot Flash page erase size is 512 bytes and the Boot Flash memory can also be either bulk or page erased.

A key application-specific feature of the 56F8146 is the inclusion of one Pulse Width Modulator (PWM) module. This module incorporates three complementary, individually programmable PWM signal output pairs and can also support six independent PWM functions to enhance motor control functionality. Complementary operation permits programmable dead time insertion, distortion correction via current sensing by software, and separate top and bottom output polarity control. The up-counter value is programmable to support a continuously variable PWM frequency. Edge-aligned and center-aligned synchronous pulse width control (0% to 100% modulation) is supported. The device is capable of controlling most motor types: ACIM (AC Induction Motors); both BDC and BLDC (Brush and Brushless DC motors); SRM and VRM (Switched and Variable Reluctance Motors); and stepper motors. The PWM incorporates fault protection and cycle-by-cycle current limiting with sufficient output drive capability to directly drive standard optoisolators. A “smoke-inhibit”, write-once protection feature for key parameters is also included. A patented PWM waveform distortion correction circuit is also provided. Each PWM is double-buffered and includes interrupt controls to permit integral reload rates to be programmable from 1 to 16. The PWM module provides reference outputs to synchronize the Analog-to-Digital Converters through two channels of Quad Timer C.

The 56F8146 incorporates a Quadrature Decoder capable of capturing all four transitions on the two-phase inputs, permitting generation of a number proportional to actual position. Speed computation capabilities accommodate both fast- and slow-moving shafts. An integrated watchdog timer in the Quadrature Decoder can be programmed with a time-out value to alert when no shaft motion is detected. Each input is filtered to ensure only true transitions are recorded.

This controller also provides a full set of standard programmable peripherals that include two Serial Communications Interfaces (SCIs); two Serial Peripheral Interfaces (SPIs); and two Quad Timers. Any of these interfaces can be used as General Purpose Input/Outputs (GPIOs) if that function is not required. An internal interrupt controller is also a part of the 56F8146.

1.3 Award-Winning Development Environment

Processor Expert™ (PE) provides a Rapid Application Design (RAD) tool that combines easy-to-use component-based software application creation with an expert knowledge system.

The CodeWarrior Integrated Development Environment is a sophisticated tool for code navigation, compiling, and debugging. A complete set of evaluation modules (EVMs) and development system cards will support concurrent engineering. Together, PE, CodeWarrior and EVMs create a complete, scalable tools solution for easy, fast, and efficient development.

1.4 Architecture Block Diagram

Note: *Features in italics are NOT available in the 56F8146 device and are shaded in the following figures.*

The 56F8346/56F8146 architecture is shown in **Figure 1-1** and **Figure 1-2**. **Figure 1-1** illustrates how the 56800E system buses communicate with internal memories, the external memory interface and the IPBus Bridge. **Table 1-2** lists the internal buses in the 56800E architecture and provides a brief description of their function. **Figure 1-2** shows the peripherals and control blocks connected to the IPBus Bridge. The figures do not show the on-board regulator and power and ground signals. They also do not show the multiplexing between peripherals or the dedicated GPIOs. Please see **Part 2, Signal/Connection Descriptions,** to see which signals are multiplexed with those of other peripherals.

Also shown in **Figure 1-2** are connections between the PWM, Timer C and ADC blocks. These connections allow the PWM and/or Timer C to control the timing of the start of ADC conversions. The Timer C channel indicated can generate periodic start (SYNC) signals to the ADC to start its conversions. In another operating mode, the PWM load interrupt (SYNC output) signal is routed internally to the Timer C input channel as indicated. The timer can then be used to introduce a controllable delay before generating its output signal. The timer output then triggers the ADC. To fully understand this interaction, please see the **56F8300 Peripheral User Manual** for clarification on the operation of all three of these peripherals.

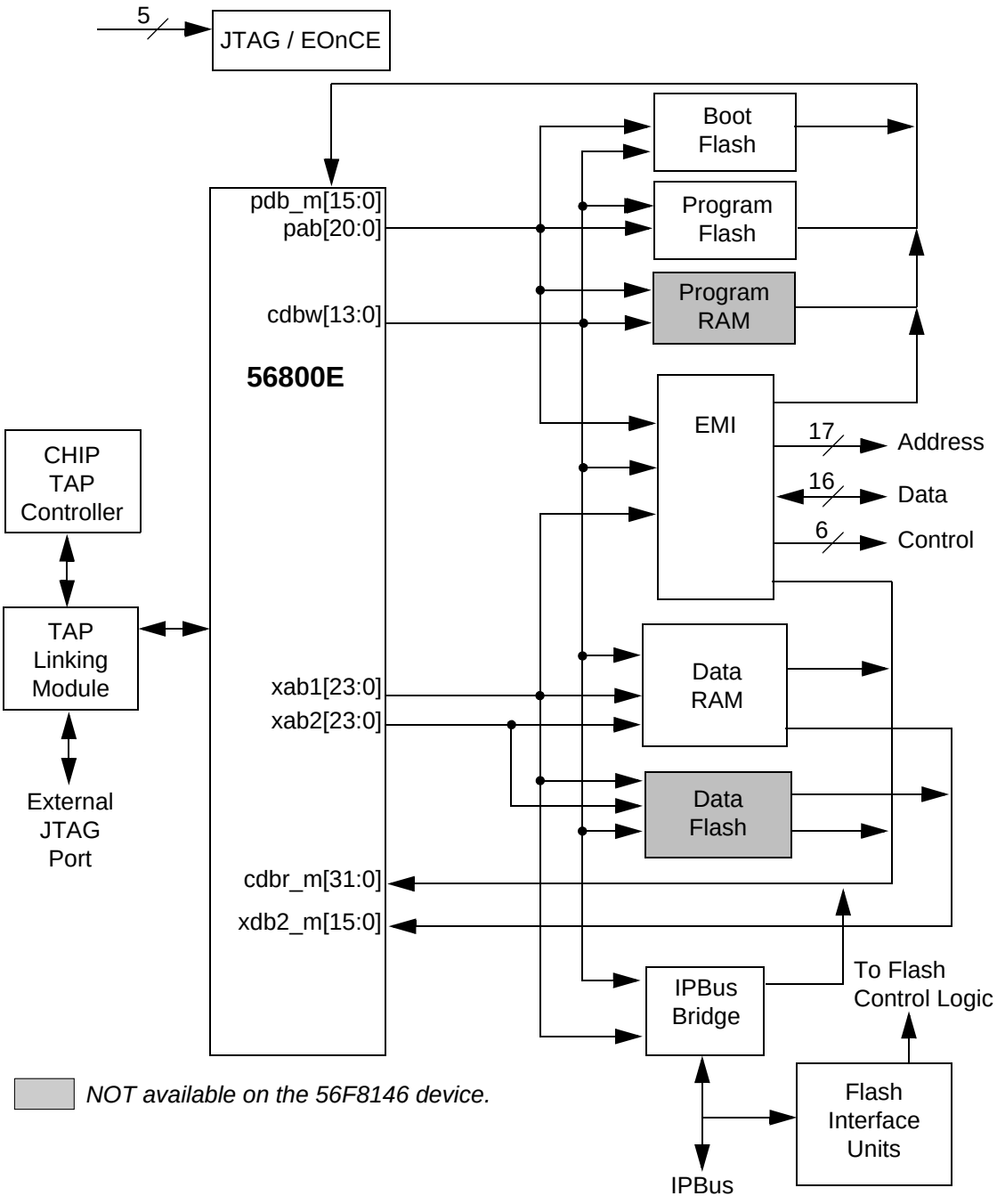

Figure 1-1 System Bus Interfaces

Note: Flash memories are encapsulated within the Flash Interface Unit (FIU). Flash control is accomplished by the I/O to the FIU over the peripheral bus, while reads and writes are completed between the core and the Flash memories.

Note: The primary data RAM port is 32 bits wide. Other data ports are 16 bits.

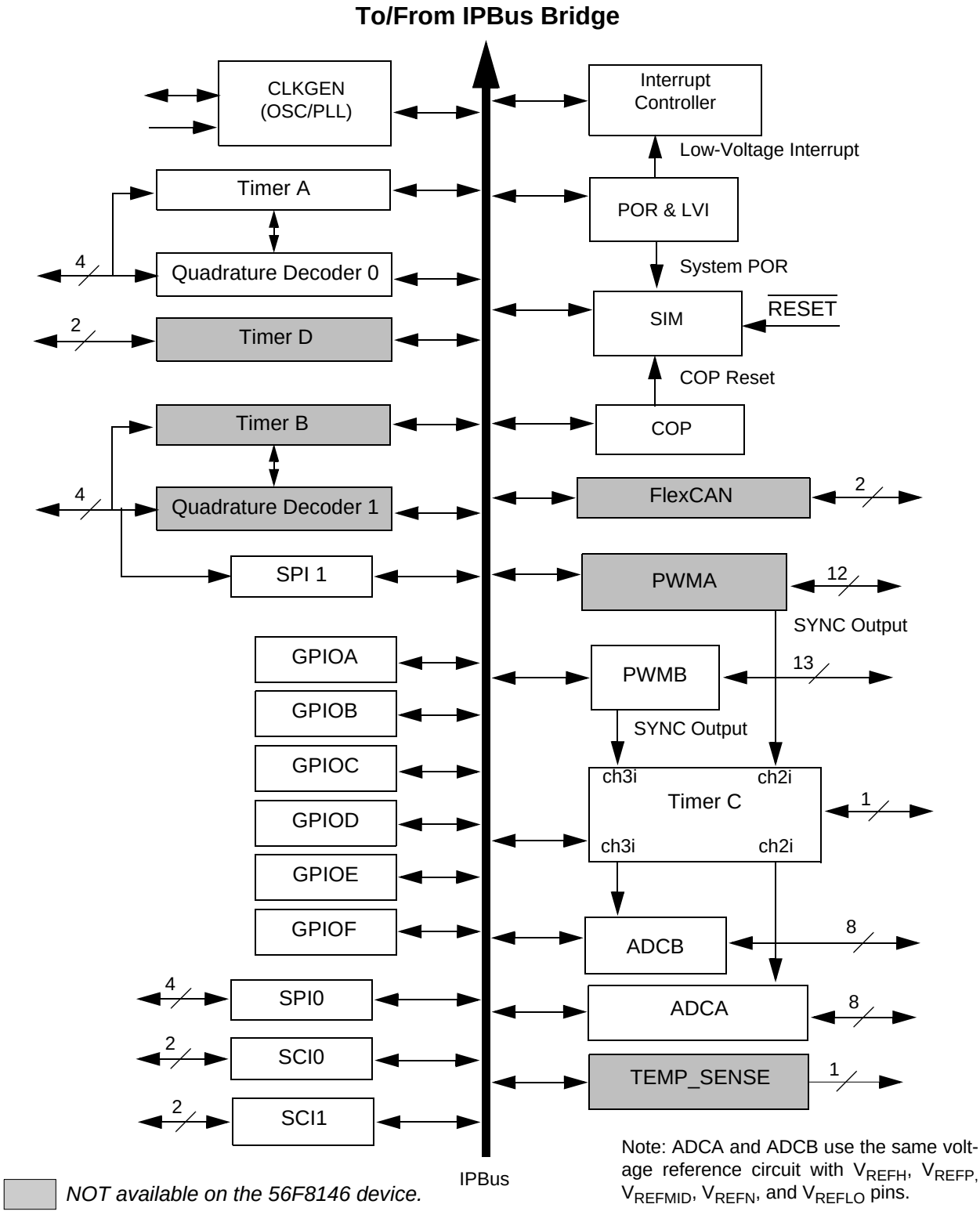

Figure 1-2 Peripheral Subsystem

Table 1-2 Bus Signal Names

Name	Function
Program Memory Interface	
pdb_m[15:0]	Program data bus for instruction word fetches or read operations.
cdbw[15:0]	Primary core data bus used for program memory writes. (Only these 16 bits of the cdbw[31:0] bus are used for writes to program memory.)
pab[20:0]	Program memory address bus. Data is returned on pdb_m bus.
Primary Data Memory Interface Bus	
cdbr_m[31:0]	Primary core data bus for memory reads. Addressed via xab1 bus.
cdbw[31:0]	Primary core data bus for memory writes. Addressed via xab1 bus.
xab1[23:0]	Primary data address bus. Capable of addressing bytes[1], words, and long data types. Data is written on cdbw and returned on cdbr_m. Also used to access memory-mapped I/O.
Secondary Data Memory Interface	
xdb2_m[15:0]	Secondary data bus used for secondary data address bus xab2 in the dual memory reads.
xab2[23:0]	Secondary data address bus used for the second of two simultaneous accesses. Capable of addressing only words. Data is returned on xdb2_m.
Peripheral Interface Bus	
IPBus [15:0]	Peripheral bus accesses all on-chip peripherals registers. This bus operates at the same clock rate as the Primary Data Memory and therefore generates no delays when accessing the processor. Write data is obtained from cdbw. Read data is provided to cdbr_m.

1. Byte accesses can only occur in the bottom half of the memory address space. The MSB of the address will be forced to 0.

1.5 Product Documentation

The documents in **Table 1-3** are required for a complete description and proper design with the 56F8346 and 56F8146 devices. Documentation is available from local Freescale distributors, Freescale semiconductor sales offices, Freescale Literature Distribution Centers, or online at **http://www.freescale.com**.

Table 1-3 Chip Documentation

Topic	Description	Order Number
DSP56800E Reference Manual	Detailed description of the 56800E family architecture, and 16-bit controller core processor and the instruction set	DSP56800ERM
56F8300 Peripheral User Manual	Detailed description of peripherals of the 56F8300 devices	MC56F8300UM
56F8300 SCI/CAN Bootloader User Manual	Detailed description of the SCI/CAN Bootloaders 56F8300 family of devices	MC56F83xxBLUM
56F8346/56F8146 Technical Data Sheet	Electrical and timing specifications, pin descriptions, and package descriptions (this document)	MC56F8346
Errata	Details any chip issues that might be present	MC56F8346E MC56F8146E

1.6 Data Sheet Conventions

This data sheet uses the following conventions:

$\overline{\text{OVERBAR}}$	This is used to indicate a signal that is active when pulled low. For example, the $\overline{\text{RESET}}$ pin is active when low.
“asserted”	A high true (active high) signal is high or a low true (active low) signal is low.
“deasserted”	A high true (active high) signal is low or a low true (active low) signal is high.

Examples:	**Signal/Symbol**	**Logic State**	**Signal State**	**Voltage[1]**
	$\overline{\text{PIN}}$	True	Asserted	V_{IL}/V_{OL}
	$\overline{\text{PIN}}$	False	Deasserted	V_{IH}/V_{OH}
	PIN	True	Asserted	V_{IH}/V_{OH}
	PIN	False	Deasserted	V_{IL}/V_{OL}

1. Values for VIL, VOL, VIH, and VOH are defined by individual product specifications.

Part 2 Signal/Connection Descriptions

2.1 Introduction

The input and output signals of the 56F8346 and 56F8146 are organized into functional groups, as detailed in **Table 2-1** and as illustrated in **Figure 2-1**. In **Table 2-2**, each table row describes the signal or signals present on a pin.

Table 2-1 Functional Group Pin Allocations

Functional Group	Number of Pins in Package	
	56F8346	56F8146
Power (V_{DD} or V_{DDA})	9	9
Power Option Control	1	1
Ground (V_{SS} or V_{SSA})	6	6
Supply Capacitors[1] & V_{PP}	6	6
PLL and Clock	4	4
Address Bus	17	17
Data Bus	16	16
Bus Control	6	6
Interrupt and Program Control	6	6
Pulse Width Modulator (PWM) Ports	25	13
Serial Peripheral Interface (SPI) Port 0	4	4
Serial Peripheral Interface (SPI) Port 1	—	4
Quadrature Decoder Port 0[2]	4	4
Quadrature Decoder Port 1[3]	4	—
Serial Communications Interface (SCI) Ports	4	4
CAN Ports	2	—
Analog to Digital Converter (ADC) Ports	21	21
Quad Timer Module Ports	3	1
JTAG/Enhanced On-Chip Emulation (EOnCE)	5	5
Temperature Sense	1	—
Dedicated GPIO	—	5

1. If the on-chip regulator is disabled, the V_{CAP} pins serve as 2.5V V_{DD_CORE} power inputs
2. Alternately, can function as Quad Timer pins or GPIO
3. Pins in this section can function as Quad Timer, SPI #1, or GPIO

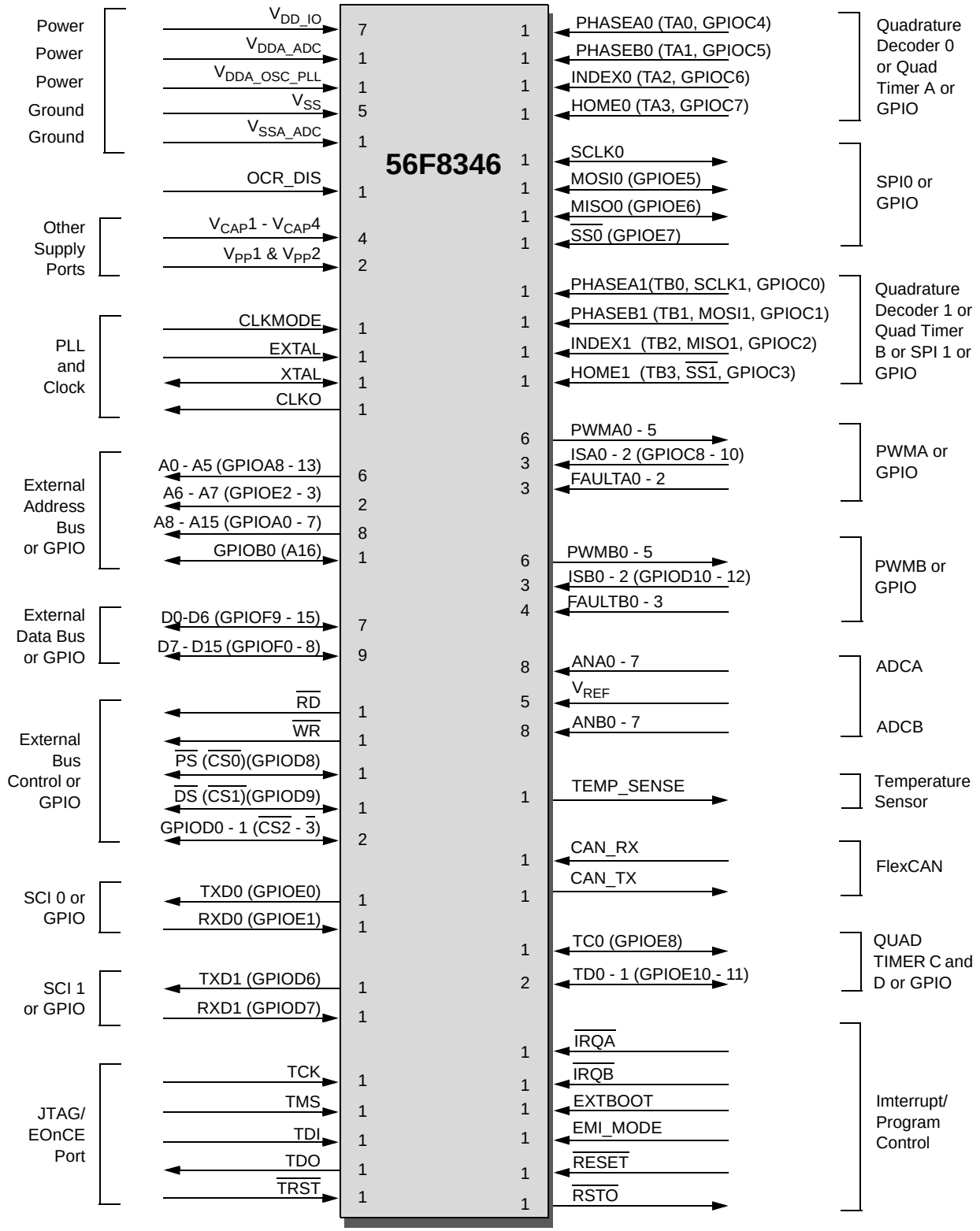

Figure 2-1 56F8346 Signals Identified by Functional Group[1] (144-pin LQFP)

1. Alternate pin functionality is shown in parenthesis; pin direction/type shown is the default functionality.

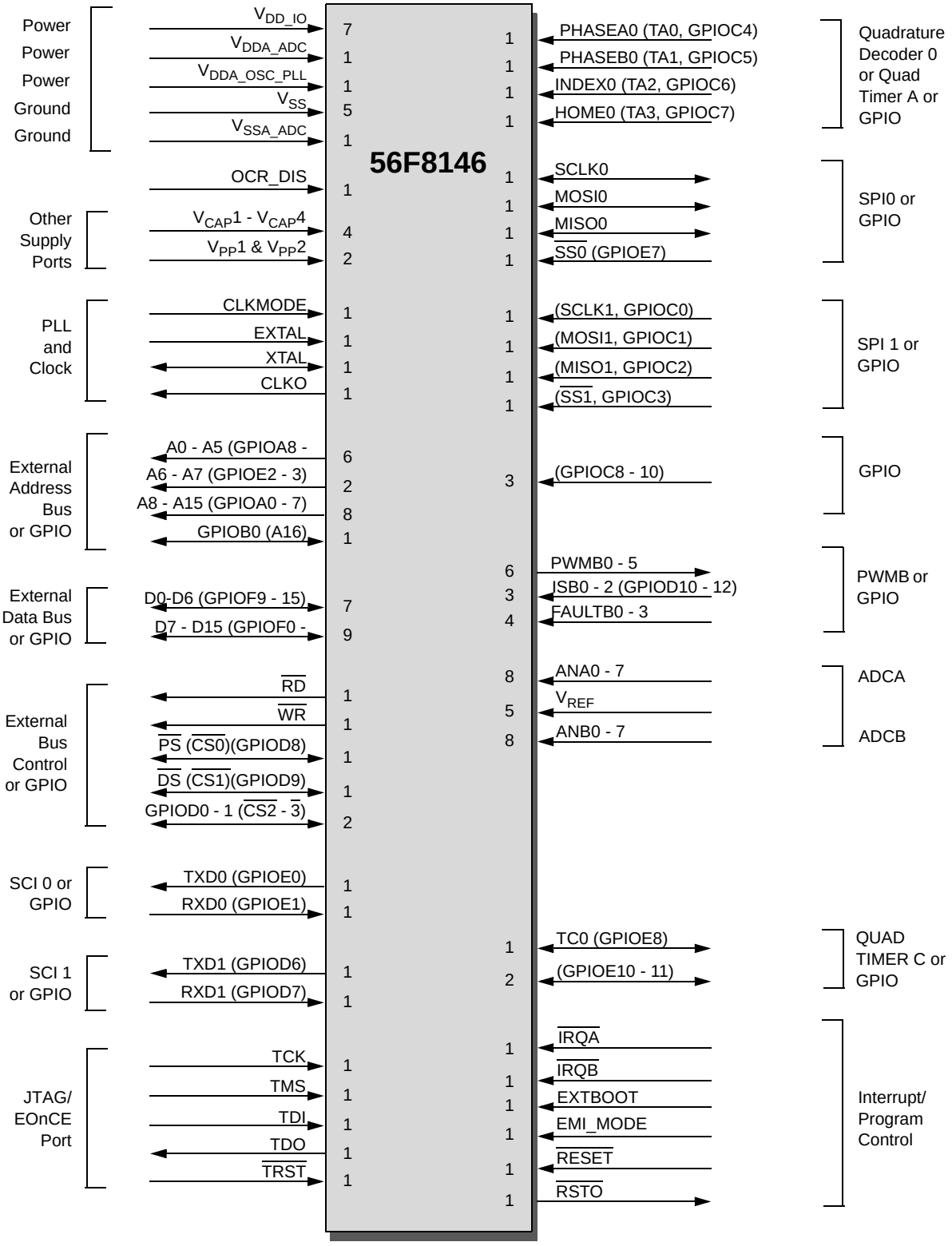

Figure 2-2 56F8146 Signals Identified by Functional Group[1] (144-pin LQFP)

1. Alternate pin functionality is shown in parenthesis; pin direction/type shown is the default functionality.

2.2 Signal Pins

After reset, each pin is configured for its primary function (listed first). Any alternate functionality must be programmed.

Note: *Signals in italics are NOT available in the 56F8146 device.*

If the “State During Reset” lists more than one state for a pin, the first state is the actual reset state. Other states show the reset condition of the alternate function, which you get if the alternate pin function is selected without changing the configuration of the alternate peripheral. For example, the A8/GPIOA0 pin shows that it is tri-stated during reset. If the GPIOA_PER is changed to select the GPIO function of the pin, it will become an input if no other registers are changed.

Table 2-2 Signal and Package Information for the 144 Pin LQFP

Signal Name	Pin No.	Type	State During Reset	Signal Description
V_{DD_IO}	1	Supply		**I/O Power** — This pin supplies 3.3V power to the chip I/O interface and also the Processor core throught the on-chip voltage regulator, if it is enabled.
V_{DD_IO}	16			
V_{DD_IO}	31			
V_{DD_IO}	38			
V_{DD_IO}	66			
V_{DD_IO}	84			
V_{DD_IO}	119			
V_{DDA_ADC}	102	Supply		**ADC Power** — This pin supplies 3.3V power to the ADC modules. It must be connected to a clean analog power supply.
$V_{DDA_OSC_PLL}$	80	Supply		**Oscillator** and **PLL Power** — This pin supplies 3.3V power to the OSC and to the internal regulator that in turn supplies the Phase Locked Loop. It must be connected to a clean analog power supply.
V_{SS}	27	Supply		V_{SS} — These pins provide ground for chip logic and I/O drivers.
V_{SS}	37			
V_{SS}	63			
V_{SS}	69			
V_{SS}	144			
V_{SSA_ADC}	103	Supply		**ADC Analog Ground** — This pin supplies an analog ground to the ADC modules.

Table 2-2 Signal and Package Information for the 144 Pin LQFP

Signal Name	Pin No.	Type	State During Reset	Signal Description
OCR_DIS	79	Input	Input	**On-Chip Regulator Disable** — Tie this pin to V_{SS} to enable the on-chip regulator Tie this pin to V_{DD} to disable the on-chip regulator **This pin is intended to be a static DC signal from power-up to shut down. Do not try to toggle this pin for power savings during operation.**
$V_{CAP}1$	51	Supply	Supply	**$V_{CAP}1$ - 4** — When OCR_DIS is tied to V_{SS} (regulator enabled), connect each pin to a 2.2µF or greater bypass capacitor in order to bypass the core logic voltage regulator, required for proper chip operation. When OCR_DIS is tied to V_{DD} (regulator disabled), these pins become V_{DD_CORE} and should be connected to a regulated 2.5V power supply. **Note: This bypass is required even if the chip is powered with an external supply.**
$V_{CAP}2$	128			
$V_{CAP}3$	83			
$V_{CAP}4$	15			
$V_{PP}1$	125	Input	Input	**$V_{PP}1$ - 2** — These pins should be left unconnected as an open circuit for normal functionality.
$V_{PP}2$	2			
CLKMODE	87	Input	Input	**Clock Input Mode Selection** — This input determines the function of the XTAL and EXTAL pins. 1 = External clock input on XTAL is used to directly drive the input clock of the chip. The EXTAL pin should be grounded. 0 = A crystal or ceramic resonator should be connected between XTAL and EXTAL.
EXTAL	82	Input	Input	**External Crystal Oscillator Input** — This input can be connected to an 8MHz external crystal. Tie this pin low if XTAL is driven by an external clock source.
XTAL	81	Input/ Output	Chip-driven	**Crystal Oscillator Output** — This output connects the internal crystal oscillator output to an external crystal. If an external clock is used, XTAL must be used as the input and EXTAL connected to GND. The input clock can be selected to provide the clock directly to the core. This input clock can also be selected as the input clock for the on-chip PLL.

Table 2-2 Signal and Package Information for the 144 Pin LQFP

Signal Name	Pin No.	Type	State During Reset	Signal Description
CLKO	3	Output	In reset, output is disabled	**Clock Output** — This pin outputs a buffered clock signal. Using the SIM CLKO Select Register (SIM_CLKOSR), this pin can be programmed as any of the following: disabled, CLK_MSTR (system clock), IPBus clock, oscillator output, prescaler clock and postscaler clock. Other signals are also available for test purposes. See **Part 6.5.7** for details.
A0 **(GPIOA8)**	138	Output Input/ Output	In reset, output is disabled, pull-up is enabled	**Address Bus** — A0 - A5 specify six of the address lines for external program or data memory accesses. Depending upon the state of the DRV bit in the EMI bus control register (BCR), A0 - A5 and EMI control signals are tri-stated when the external bus is inactive. Most designs will want to change the DRV state to DRV = 1 instead of using the default setting. **Port A GPIO** — These six GPIO pins can be individually programmed as input or output pins. After reset, the default state is Address Bus. To deactivate the internal pull-up resistor, clear the appropriate GPIO bit in the GPIOA_PUR register. Example: GPIOA8, clear bit 8 in the GPIOA_PUR register.
A1 (GPIOA9)	10			
A2 (GPIOA10)	11			
A3 (GPIOA11)	12			
A4 (GPIOA12)	13			
A5 (GPIOA13)	14			

Table 2-2 Signal and Package Information for the 144 Pin LQFP

Signal Name	Pin No.	Type	State During Reset	Signal Description
A6 **(GPIOE2)**	17	Output Schmitt Input/ Output	In reset, output is disabled, pull-up is enabled	**Address Bus** — A6 - A7 specify two of the address lines for external program or data memory accesses. Depending upon the state of the DRV bit in the EMI bus control register (BCR), A6 - A7 and EMI control signals are tri-stated when the external bus is inactive. Most designs will want to change the DRV state to DRV = 1 instead of using the default setting. **Port E GPIO** — These two GPIO pins can be individually programmed as input or output pins. After reset, the default state is Address Bus. To deactivate the internal pull-up resistor, clear the appropriate GPIO bit in the GPIOE_PUR register. Example: GPIOE2, clear bit 2 in the GPIOE_PUR register.
A7 **(GPIOE3)**	18			
A8 **(GPIOA0)**	19	Output Schmitt Input/ Output	In reset, output is disabled, pull-up is enabled	**Address Bus**— A8 - A15 specify eight of the address lines for external program or data memory accesses. Depending upon the state of the DRV bit in the EMI bus control register (BCR), A8 - A15 and EMI control signals are tri-stated when the external bus is inactive. Most designs will want to change the DRV state to DRV = 1 instead of using the default setting. **Port A GPIO** — These eight GPIO pins can be individually programmed as input or output pins. After reset, the default state is Address Bus. To deactivate the internal pull-up resistor, clear the appropriate GPIO bit in the GPIOA_PUR register. Example: GPIOA0, clear bit 0 in the GPIOA_PUR register.
A9 (GPIOA1)	20			
A10 (GPIOA2)	21			
A11 (GPIOA3)	22			
A12 (GPIOA4)	23			
A13 (GPIOA5)	24			
A14 (GPIOA6)	25			
A15 (GPIOA7)	26			

Table 2-2 Signal and Package Information for the 144 Pin LQFP

Signal Name	Pin No.	Type	State During Reset	Signal Description
GPIOB0 **(A16)**	33	Schmitt Input/ Output Output	Input, pull-up enabled	**Port B GPIO** — This GPIO pin can be programmed as an input or output pin. **Address Bus** — A16 specifies one of the address lines for external program or data memory accesses. Depending upon the state of the DRV bit in the EMI bus control register (BCR), A16 and EMI control signals are tri-stated when the external bus is inactive. Most designs will want to change the DRV state to DRV = 1 instead of using the default setting. After reset, the start-up state of GPIOB0 (GPIO or address) is determined as a function of EXTBOOT, EMI_MODE and the Flash security setting. See **Table 4-4** for further information on when this pin is configured as an address pin at reset. In all cases, this state may be changed by writing to GPIOB_PER. To deactivate the internal pull-up resistor, clear bit 0 in the GPIOB_PUR register.
D0 **(GPIOF9)**	59	Input/ Outpu Input/ Outputt	In reset, output is disabled, pull-up is enabled	**Data Bus** — D0 - D6 specify part of the data for external program or data memory accesses. Depending upon the state of the DRV bit in the EMI bus control register (BCR), D0-D6 are tri-stated when the external bus is inactive. Most designs will want to change the DRV state to DRV = 1 instead of using the default setting. **Port F GPIO** — These seven GPIO pins can be individually programmed as input or output pins. At reset, these pins default to the EMI Data Bus function. To deactivate the internal pull-up resistor, clear the appropriate GPIO bit in the GPIOF_PUR register. Example: GPIOF9, clear bit 9 in the GPIOF_PUR register.
D1 (GPIOF10)	60			
D2 (GPIOF11)	72			
D3 (GPIOF12)	75			
D4 (GPIOF13)	76			
D5 (GPIOF14)	77			
D6 (GPIOF15)	78			

Table 2-2 Signal and Package Information for the 144 Pin LQFP

Signal Name	Pin No.	Type	State During Reset	Signal Description
D7 **(GPIOF0)**	28	Input/ Output Input/ Output	In reset, output is disabled, pull-up is enabled	**Data Bus** — D7 - D14 specify part of the data for external program or data memory accesses. Most designs will want to change the DRV state to DRV = 1 instead of using the default setting. **Port F GPIO** — These eight GPIO pins can be individually programmed as input or output pins. At reset, these pins default to Data Bus functionality. To deactivate the internal pull-up resistor, clear the appropriate GPIO bit in the GPIOF_PUR register. Example: GPIOF0, clear bit 0 in the GPIOF_PUR register.
D8 (GPIOF1)	29			
D9 (GPIOF2)	30			
D10 (GPIOF3)	32			
D11 (GPIOF4)	133			
D12 (GPIOF5)	134			
D13 (GPIOF6)	135			
D14 (GPIOF7)	136			
D15 **(GPIOF8)**	137	Input/ Output Input/ Output	In reset, output is disabled, pull-up is enabled	**Data Bus** — D15 specifies part of the data for external program or data memory accesses. Most designs will want to change the DRV state to DRV = 1 instead of using the default setting. **Port F GPIO** — This GPIO pin can be individually programmed as an input or output pin. At reset, this pin defaults to the Data Bus function. To deactivate the internal pull-up resistor, clear bit 8 in the GPIOF_PUR register.

Table 2-2 Signal and Package Information for the 144 Pin LQFP

Signal Name	Pin No.	Type	State During Reset	Signal Description
$\overline{\text{RD}}$	45	Output	In reset, output is disabled, pull-up is enabled	**Read Enable** — $\overline{\text{RD}}$ is asserted during external memory read cycles. When $\overline{\text{RD}}$ is asserted low, pins D0 - D15 become inputs and an external device is enabled onto the data bus. When $\overline{\text{RD}}$ is deasserted high, the external data is latched inside the device. When $\overline{\text{RD}}$ is asserted, it qualifies the A0 - A16, $\overline{\text{PS}}$, $\overline{\text{DS}}$, and $\overline{\text{CSn}}$ pins. $\overline{\text{RD}}$ can be connected directly to the $\overline{\text{OE}}$ pin of a static RAM or ROM. Depending upon the state of the DRV bit in the EMI bus control register (BCR), $\overline{\text{RD}}$ is tri-stated when the external bus is inactive. Most designs will want to change the DRV state to DRV = 1 instead of using the default setting. To deactivate the internal pull-up resistor, set the CTRL bit in the SIM_PUDR register.
$\overline{\text{WR}}$	44	Output	In reset, output is disabled, pull-up is enabled	**Write Enable** — $\overline{\text{WR}}$ is asserted during external memory write cycles. When $\overline{\text{WR}}$ is asserted low, pins D0 - D15 become outputs and the device puts data on the bus. When $\overline{\text{WR}}$ is deasserted high, the external data is latched inside the external device. When $\overline{\text{WR}}$ is asserted, it qualifies the A0 - A16, $\overline{\text{PS}}$, $\overline{\text{DS}}$, and $\overline{\text{CSn}}$ pins. $\overline{\text{WR}}$ can be connected directly to the $\overline{\text{WE}}$ pin of a static RAM. Depending upon the state of the DRV bit in the EMI bus control register (BCR), $\overline{\text{WR}}$ is tri-stated when the external bus is inactive. Most designs will want to change the DRV state to DRV = 1 instead of using the default setting. To deactivate the internal pull-up resistor, set the CTRL bit in the SIM_PUDR register.
$\overline{\text{PS}}$ **($\overline{\text{CS0}}$)** **(GPIOD8)**	46	Output Input/ Output	In reset, output is disabled, pull-up is enabled	**Program Memory Select** — This signal is actually $\overline{\text{CS0}}$ in the EMI, which is programmed at reset for compatibility with the 56F80x $\overline{\text{PS}}$ signal. $\overline{\text{PS}}$ is asserted low for external program memory access. Depending upon the state of the DRV bit in the EMI bus control register (BCR), $\overline{\text{PS}}$ is tri-stated when the external bus is inactive. $\overline{\text{CS0}}$ resets to provide the $\overline{\text{PS}}$ function as defined on the 56F80x devices. **Port D GPIO** — This GPIO pin can be individually programmed as an input or output pin. To deactivate the internal pull-up resistor, clear bit 8 in the GPIOD_PUR register.

Table 2-2 Signal and Package Information for the 144 Pin LQFP

Signal Name	Pin No.	Type	State During Reset	Signal Description
DS **(CS1)** **(GPIOD9)**	47	Output Input/ Output	In reset, output is disabled, pull-up is enabled	**Data Memory Select** — This signal is actually CS1 in the EMI, which is programmed at reset for compatibility with the 56F80x DS signal. DS is asserted low for external data memory access. Depending upon the state of the DRV bit in the EMI bus control register (BCR), DS is tri-stated when the external bus is inactive. CS1 resets to provide the DS function as defined on the 56F80x devices. **Port D GPIO** — This GPIO pin can be individually programmed as an input or output pin. To deactivate the internal pull-up resistor, clear bit 9 in the GPIOD_PUR register.
GPIOD0 **(CS2)**	48	Input/ Output Output	Input, pull-up enabled	**Port D GPIO** — These two GPIO pins can be individually programmed as input or output pins. **Chip Select** — CS2 - CS3 may be programmed within the EMI module to act as chip selects for specific areas of the external memory map. Depending upon the state of the DRV bit in the EMI bus control register (BCR), CS2 - CS3 are tri-stated when the external bus is inactive. Most designs will want to change the DRV state to DRV = 1 instead of using the default setting. At reset, these pins are configured as GPIO. To deactivate the internal pull-up resistor, clear the appropriate GPIO bit in the GPIOD_PUR register. Example: GPIOD0, clear bit 0 in the GPIOD_PUR register.
GPIOD1 **(CS3)**	49			
TXD0 **(GPIOE0)**	4	Output Input/ Output	In reset, output is disabled, pull-up is enabled	**Transmit Data** — SCI0 transmit data output **Port E GPIO** — This GPIO pin can be individually programmed as an input or output pin. After reset, the default state is SCI output. To deactivate the internal pull-up resistor, clear bit 0 in the GPIOE_PUR register.

Table 2-2 Signal and Package Information for the 144 Pin LQFP

Signal Name	Pin No.	Type	State During Reset	Signal Description
RXD0 **(GPIOE1)**	5	Input Input/ Output	Input, pull-up enabled	**Receive Data** — SCI0 receive data input **Port E GPIO** — This GPIO pin can be individually programmed as an input or output pin. After reset, the default state is SCI output. To deactivate the internal pull-up resistor, clear bit 1 in the GPIOE_PUR register.
TXD1 **(GPIOD6)**	42	Output Input/ Output	In reset, output is disabled, pull-up is enabled	**Transmit Data** — SCI1 transmit data output **Port D GPIO** — This GPIO pin can be individually programmed as an input or output pin. After reset, the default state is SCI output. To deactivate the internal pull-up resistor, clear bit 6 in the GPIOD_PUR register.
RXD1 **(GPIOD7)**	43	Input Input/ Output	Input, pull-up enabled	**Receive Data** — SCI1 receive data input **Port D GPIO** — This GPIO pin can be individually programmed as an input or output pin. After reset, the default state is SCI input. To deactivate the internal pull-up resistor, clear bit 7 in the GPIOD_PUR register.
TCK	121	Schmitt Input	Input, pulled low internally	**Test Clock Input** — This input pin provides a gated clock to synchronize the test logic and shift serial data to the JTAG/EOnCE port. The pin is connected internally to a pull-down resistor.
TMS	122	Schmitt Input	Input, pulled high internally	**Test Mode Select Input** — This input pin is used to sequence the JTAG TAP controller's state machine. It is sampled on the rising edge of TCK and has an on-chip pull-up resistor. To deactivate the internal pull-up resistor, set the JTAG bit in the SIM_PUDR register. **Note:** Always tie the TMS pin to V_{DD} through a 2.2K resistor.
TDI	123	Schmitt Input	Input, pulled high internally	**Test Data Input** — This input pin provides a serial input data stream to the JTAG/EOnCE port. It is sampled on the rising edge of TCK and has an on-chip pull-up resistor. To deactivate the internal pull-up resistor, set the JTAG bit in the SIM_PUDR register.

Table 2-2 Signal and Package Information for the 144 Pin LQFP

Signal Name	Pin No.	Type	State During Reset	Signal Description
TDO	124	Output	In reset, output is disabled, pull-up is enabled	**Test Data Output** — This tri-stateable output pin provides a serial output data stream from the JTAG/EOnCE port. It is driven in the shift-IR and shift-DR controller states, and changes on the falling edge of TCK.
$\overline{\text{TRST}}$	120	Schmitt Input	Input, pulled high internally	**Test Reset** — As an input, a low signal on this pin provides a reset signal to the JTAG TAP controller. To ensure complete hardware reset, $\overline{\text{TRST}}$ should be asserted whenever $\overline{\text{RESET}}$ is asserted. The only exception occurs in a debugging environment when a hardware device reset is required and the JTAG/EOnCE module must not be reset. In this case, assert $\overline{\text{RESET}}$, but do not assert $\overline{\text{TRST}}$. To deactivate the internal pull-up resistor, set the JTAG bit in the SIM_PUDR register. **Note:** For normal operation, connect $\overline{\text{TRST}}$ directly to V_{SS}. If the design is to be used in a debugging environment, $\overline{\text{TRST}}$ may be tied to V_{SS} through a 1K resistor.
PHASEA0 **(TA0)** **(GPIOC4)**	139	Schmitt Input Schmitt Input/ Output Schmitt Input/ Output	Input, pull-up enabled	**Phase A** — Quadrature Decoder 0, PHASEA input **TA0** — Timer A, Channel 0 **Port C GPIO** — This GPIO pin can be individually programmed as an input or output pin. After reset, the default state is PHASEA0. To deactivate the internal pull-up resistor, clear bit 4 of the GPIOC_PUR register.

Table 2-2 Signal and Package Information for the 144 Pin LQFP

Signal Name	Pin No.	Type	State During Reset	Signal Description
PHASEB0	140	Schmitt Input	Input, pull-up enabled	**Phase B** — Quadrature Decoder 0, PHASEB input
(TA1)		Schmitt Input/ Output		**TA1** — Timer A, Channel
(GPIOC5)		Schmitt Input/ Output		**Port C GPIO** — This GPIO pin can be individually programmed as an input or output pin. After reset, the default state is PHASEB0. To deactivate the internal pull-up resistor, clear bit 5 of the GPIOC_PUR register.
INDEX0	141	Schmitt Input	Input, pull-up enabled	**Index** — Quadrature Decoder 0, INDEX input
(TA2)		Schmitt Input/ Output		**TA2** — Timer A, Channel 2
(GPOPC6)		Schmitt Input/ Output		**Port C GPIO** — This GPIO pin can be individually programmed as an input or output pin. After reset, the default state is INDEX0. To deactivate the internal pull-up resistor, clear bit 6 of the GPIOC_PUR register.
HOME0	142	Schmitt Input	Input, pull-up enabled	**Home** — Quadrature Decoder 0, HOME input
(TA3)		Schmitt Input/ Output		**TA3** — Timer A, Channel 3
(GPIOC7)		Schmitt Input/ Output		**Port C GPIO** — This GPIO pin can be individually programmed as an input or output pin. After reset, the default state is HOME0. To deactivate the internal pull-up resistor, clear bit 7 of the GPIOC_PUR register.

Table 2-2 Signal and Package Information for the 144 Pin LQFP

Signal Name	Pin No.	Type	State During Reset	Signal Description
SCLK0 **(GPIOE4)**	130	Schmitt Input/ Output Schmitt Input/ Output	Input, pull-up enabled	**SPI 0 Serial Clock** — In the master mode, this pin serves as an output, clocking slaved listeners. In slave mode, this pin serves as the data clock input. **Port E GPIO** — This GPIO pin can be individually programmed as an input or output pin. After reset, the default state is SCLK0. To deactivate the internal pull-up resistor, clear bit 4 in the GPIOE_PUR register.
MOSI0 **(GPIOE5)**	132	Input/ Output Input/ Output	In reset, output is disabled, pull-up is enabled	**SPI 0 Master Out/Slave In** — This serial data pin is an output from a master device and an input to a slave device. The master device places data on the MOSI line a half-cycle before the clock edge the slave device uses to latch the data. **Port E GPIO** — This GPIO pin can be individually programmed as an input or output pin. After reset, the default state is MOSI0. To deactivate the internal pull-up resistor, clear bit 5 in the GPIOE_PUR register.
MISO0 **(GPIOE6)**	131	Input/ Output Input/ Output	Input, pull-up enabled	**SPI 0 Master In/Slave Out** — This serial data pin is an input to a master device and an output from a slave device. The MISO line of a slave device is placed in the high-impedance state if the slave device is not selected. The slave device places data on the MISO line a half-cycle before the clock edge the master device uses to latch the data. **Port E GPIO** — This GPIO pin can be individually programmed as an input or output pin. After reset, the default state is MISO0. To deactivate the internal pull-up resistor, clear bit 6 in the GPIOE_PUR register.

Table 2-2 Signal and Package Information for the 144 Pin LQFP

Signal Name	Pin No.	Type	State During Reset	Signal Description
$\overline{\text{SS0}}$ **(GPIOE7)**	129	Input Input/ Output	Input, pull-up enabled	**SPI 0 Slave Select** — $\overline{\text{SS0}}$ is used in slave mode to indicate to the SPI module that the current transfer is to be received. **Port E GPIO** — This GPIO pin can be individually programmed as input or output pin. After reset, the default state is $\overline{\text{SS0}}$. To deactivate the internal pull-up resistor, clear bit 7 in the GPIOE_PUR register.
PHASEA1 ***(TB0)*** **(SCLK1)** **(GPIOC0)**	6	Schmitt Input Schmitt Input/ Output Schmitt Input/ Output Schmitt Input/ Output	Input, pull-up enabled	**Phase A1** — Quadrature Decoder, PHASEA input for decoder 1. **TB0** — Timer B, Channel 0 **SPI 1 Serial Clock** — In the master mode, this pin serves as an output, clocking slaved listeners. In slave mode, this pin serves as the data clock input. To activate the SPI function, set the PHSA_ALT bit in the SIM_GPS register. For details, see **Part 6.5.8**. **Port C GPIO** — This GPIO pin can be individually programmed as an input or output pin. In the 56F8346, the default state after reset is PHASEA1. In the 56F8146, the default state is not one of the functions offered and must be reconfigured. To deactivate the internal pull-up resistor, clear bit 0 in the GPIOC_PUR register.

Table 2-2 Signal and Package Information for the 144 Pin LQFP

Signal Name	Pin No.	Type	State During Reset	Signal Description
PHASEB1	7	Schmitt Input	Input, pull-up enabled	**Phase B1** — Quadrature Decoder 1, PHASEB input for decoder 1.
(TB1)		Schmitt Input/ Output		**TB1** — Timer B, Channel 1
(MOSI1)		Schmitt Input/ Output		**SPI 1 Master Out/Slave In** — This serial data pin is an output from a master device and an input to a slave device. The master device places data on the MOSI line a half-cycle before the clock edge the slave device uses to latch the data. To activate the SPI function, set the PHSB_ALT bit in the SIM_GPS register. For details, see **Part 6.5.8**.
(GPIOC1)		Schmitt Input/ Output		**Port C GPIO** — This GPIO pin can be individually programmed as an input or output pin. In the 56F8346, the default state after reset is PHASEB1. In the 56F8146, the default state is not one of the functions offered and must be reconfigured. To deactivate the internal pull-up resistor, clear bit 1 in the GPIOC_PUR register.

Table 2-2 Signal and Package Information for the 144 Pin LQFP

Signal Name	Pin No.	Type	State During Reset	Signal Description
INDEX1	8	Schmitt Input	Input, pull-up enabled	**Index1** — Quadrature Decoder 1, INDEX input
(TB2)		Schmitt Input/ Output		**TB2** — Timer B, Channel 2
(MISO1)		Schmitt Input/ Output		**SPI 1 Master In/Slave Out** — This serial data pin is an input to a master device and an output from a slave device. The MISO line of a slave device is placed in the high-impedance state if the slave device is not selected. The slave device places data on the MISO line a half-cycle before the clock edge the master device uses to latch the data. To activate the SPI function, set the INDEX_ALT bit in the SIM_GPS register. For details, see **Part 6.5.8**.
(GPIOC2)		Schmitt Input/ Output		**Port C GPIO** — This GPIO pin can be individually programmed as an input or output pin. In the 56F8346, the default state after reset is INDEX1. In the 56F8146, the default state is not one of the functions offered and must be reconfigured. To deactivate the internal pull-up resistor, clear bit 2 in the GPIOC_PUR register.
HOME1	9	Schmitt Input	Input, pull-up enabled	**Home** — Quadrature Decoder 1, HOME input
(TB3)		Schmitt Input/ Output		**TB3** — Timer B, Channel 3
($\overline{\text{SS1}}$)		Schmitt Input		**SPI 1 Slave Select** — In the master mode, this pin is used to arbitrate multiple masters. In slave mode, this pin is used to select the slave. To activate the SPI function, set the HOME_ALT bit in the SIM_GPS register. For details, see **Part 6.5.8**.
(GPIOC3)		Schmitt Input/ Output		**Port C GPIO** — This GPIO pin can be individually programmed as an input or output pin. In the 56F8346, the default state after reset is HOME1. In the 56F8146, the default state is not one of the functions offered and must be reconfigured. To deactivate the internal pull-up resistor, clear bit 3 in the GPIOC_PUR register.

Table 2-2 Signal and Package Information for the 144 Pin LQFP

Signal Name	Pin No.	Type	State During Reset	Signal Description
PWMA0	62	Output	In reset, output is disabled, pull-up is enabled	**PWMA0 - 5** — These are six PWMA outputs.
PWMA1	64			
PWMA2	65			
PWMA3	67			
PWMA4	68			
PWMA5	70			
ISA0 **(GPIOC8)**	113	Schmitt Input Schmitt Input/ Output	Input, pull-up enabled	**ISA0 - 2** — These three input current status pins are used for top/bottom pulse width correction in complementary channel operation for PWMA. **Port C GPIO** — These three GPIO pins can be individually programmed as input or output pins. In the 56F8346, these pins default to ISA functionality after reset. In the 56F8146, the default state is not one of the functions offered and must be reconfigured. To deactivate the internal pull-up resistor, clear the appropriate bit of the GPIOC_PUR register. For details, see **Part 6.5.8**.
ISA1 **(GPIOC9)**	114			
ISA2 **(GPIOC10)**	115			
FAULTA0	71	Schmitt Input	Input, pull-up enabled	**FAULTA0 - 2** — These three fault input pins are used for disabling selected PWMA outputs in cases where fault conditions originate off-chip. To deactivate the internal pull-up resistor, set the PWMA0 bit in the SIM_PUDR register. For details, see **Part 6.5.8**.
FAULTA1	73			
FAULTA2	74			
PWMB0	34	Output	In reset, output is disabled, pull-up is enabled	**PWMB0 - 5** — Six PWMB output pins.
PWMB1	35			
PWMB2	36			
PWMB3	39			
PWMB4	40			
PWMB5	41			

Table 2-2 Signal and Package Information for the 144 Pin LQFP

Signal Name	Pin No.	Type	State During Reset	Signal Description
ISB0 **(GPIOD10)**	50	Schmitt Input Schmitt Input/ Output	Input, pull-up enabled	**ISB0 - 2** — These three input current status pins are used for top/bottom pulse width correction in complementary channel operation for PWMB. **Port D GPIO** — These three GPIO pins can be individually programmed as input or output pins. At reset, these pins default to ISB functionality. To deactivate the internal pull-up resistor, clear the appropriate bit of the GPIOD_PUR register. For details, see **Part 6.5.8**.
ISB1 (GPIOD11)	52			
ISB2 (GPIOD12)	53			
FAULTB0	56	Schmitt Input	Input, pull-up enabled	**FAULTB0 - 3** — These four fault input pins are used for disabling selected PWMB outputs in cases where fault conditions originate off-chip. To deactivate the internal pull-up resistor, set the PWMB bit in the SIM_PUDR register. For details, see **Part 6.5.8**.
FAULTB1	57			
FAULTB2	58			
FAULTB3	61			
ANA0	88	Input	Analog Input	**ANA0 - 3** — Analog inputs to ADC A, channel 0
ANA1	89			
ANA2	90			
ANA3	91			
ANA4	92	Input	Analog Input	**ANA4 - 7** — Analog inputs to ADC A, channel 1
ANA5	93			
ANA6	94			
ANA7	95			
V_{REFH}	101	Input	Analog Input	**V_{REFH}** — Analog Reference Voltage High. **V_{REFH}** must be less than or equal to **V_{DDA_ADC}**.
V_{REFP}	100	Input/ Output	Analog Input/ Output	**V_{REFP}, V_{REFMID} & V_{REFN}** — Internal pins for voltage reference which are brought off-chip so they can be bypassed. Connect to a 0.1μF low ESR capacitor.
V_{REFMID}	99			
V_{REFN}	98			
V_{REFLO}	97	Input	Analog Input	**V_{REFLO}** — Analog Reference Voltage Low. This should normally be connected to a low-noise V_{SSA}.

Table 2-2 Signal and Package Information for the 144 Pin LQFP

Signal Name	Pin No.	Type	State During Reset	Signal Description
ANB0	104	Input	Analog Input	**ANB0 - 3** — Analog inputs to ADC B, channel 0
ANB1	105			
ANB2	106			
ANB3	107			
ANB4	108	Input	Analog Input	**ANB4 - 7** — Analog inputs to ADC B, channel 1
ANB5	109			
ANB6	110			
ANB7	111			
TEMP_SENSE	96	Output	Analog Output	**Temperature Sensor Diode** — This signal connects to an on-chip diode that can be connected to one of the ADC inputs and used to monitor the temperature of the die. Must be bypassed with a 0.01μF capacitor.
CAN_RX	127	Schmitt Input	Input, pull-up enabled	**FlexCAN Receive Data** — This is the CAN input. This pin has an internal pull-up resistor. To deactivate the internal pull-up resistor, set the CAN bit in the SIM_PUDR register.
CAN_TX	126	Open Drain Output	Open Drain Output	**FlexCAN Transmit Data** — CAN output with internal pull-up enable at reset.* * **Note:** If a pin is configured as open drain output mode, internal pull-up will automatically be disabled when it outputs low. Internal pull-up will be enabled unless it has been manually disabled by clearing the corresponding bit in the PUREN register of the GPIO module, when it outputs high. If a pin is configured as push-pull output mode, internal pull-up will automatically be disabled, whether it outputs low or high.
TC0 **(GPIOE8)**	118	Schmitt Input/ Output Schmitt Input/ Output	Input, pull-up enabled	**TC0** — Timer C Channel 0 **Port E GPIO** — This GPIO pin can be programmed as an input or output pin. At reset, this pin defaults to timer functionality. To deactivate the internal pull-up resistor, clear bit 8 of the GPIOE_PUR register.

Table 2-2 Signal and Package Information for the 144 Pin LQFP

Signal Name	Pin No.	Type	State During Reset	Signal Description
TD0 **(GPIOE10)**	116	Schmitt Input/ Output Schmitt Input/ Output	Input, pull-up enabled	**TD0 -1** — Timer D, Channels 0 and 1 **Port E GPIO** — These GPIO pins can be individually programmed as input or output pins. At reset, these pins default to Timer functionality. To deactivate the internal pull-up resistor, clear the appropriate bit of the GPIOE_PUR register. See **Part 6.5.6** for details.
TD1 (GPIOE11)	117			
$\overline{\text{IRQA}}$	54	Schmitt Input	Input, pull-up enabled	**External Interrupt Request A and B** — The $\overline{\text{IRQA}}$ and $\overline{\text{IRQB}}$ inputs are asynchronous external interrupt requests during Stop and Wait mode operation. During other operating modes, they are synchronized external interrupt requests, which indicate an external device is requesting service. They can be programmed to be level-sensitive or negative-edge triggered. To deactivate the internal pull-up resistor, set the IRQ bit in the SIM_PUDR register. See **Part 6.5.6** for details.
$\overline{\text{IRQB}}$	55			
$\overline{\text{RESET}}$	86	Schmitt Input	Input, pull-up enabled	**Reset** — This input is a direct hardware reset on the processor. When $\overline{\text{RESET}}$ is asserted low, the device is initialized and placed in the reset state. A Schmitt trigger input is used for noise immunity. When the $\overline{\text{RESET}}$ pin is deasserted, the initial chip operating mode is latched from the EXTBOOT pin. The internal reset signal will be deasserted synchronous with the internal clocks after a fixed number of internal clocks. To ensure complete hardware reset, $\overline{\text{RESET}}$ and $\overline{\text{TRST}}$ should be asserted together. The only exception occurs in a debugging environment when a hardware device reset is required and the JTAG/EOnCE module must not be reset. In this case, assert $\overline{\text{RESET}}$ but do not assert $\overline{\text{TRST}}$. **Note:** The internal Power-On Reset will assert on initial power-up. To deactivate the internal pull-up resistor, set the $\overline{\text{RESET}}$ bit in the SIM_PUDR register. See **Part 6.5.6** for details.
$\overline{\text{RSTO}}$	85	Output	Output	**Reset Output** — This output reflects the internal reset state of the chip.

Table 2-2 Signal and Package Information for the 144 Pin LQFP

Signal Name	Pin No.	Type	State During Reset	Signal Description
EXTBOOT	112	Schmitt Input	Input, pull-up enabled	**External Boot** — This input is tied to V_{DD} to force the device to boot from off-chip memory (assuming that the on-chip Flash memory is not in a secure state). Otherwise, it is tied to ground. For details, see **Table 4-4**. **Note:** When this pin is tied low, the customer boot software should disable the internal pull-up resistor by setting the XBOOT bit of the SIM_PUDR; see **Part 6.5.6**.
EMI_MODE	143	Schmitt Input	Input, pull-up enabled	**External Memory Mode** — The EMI_MODE input is internally tied low (to V_{SS}). This device will boot from internal flash memory under normal operation. This function is also affected by EXTBOOT and the Flash security mode. For details, see **Table 4-4**. If a 20-bit address bus is not desired, then this pin is tied to ground. **Note:** When this pin is tied low, the customer boot software should disable the internal pull-up resistor by setting the EMI_MODE bit of the SIM_PUDR; see **Part 6.5.6**.

Part 3 On-Chip Clock Synthesis (OCCS)

3.1 Introduction

Refer to the OCCS chapter of the **56F8300 Peripheral User Manual** for a full description of the OCCS. The material contained here identifies the specific features of the OCCS design. **Figure 3-1** shows the specific OCCS block diagram to reference in the OCCS chapter in the **56F8300 Peripheral User Manual**.

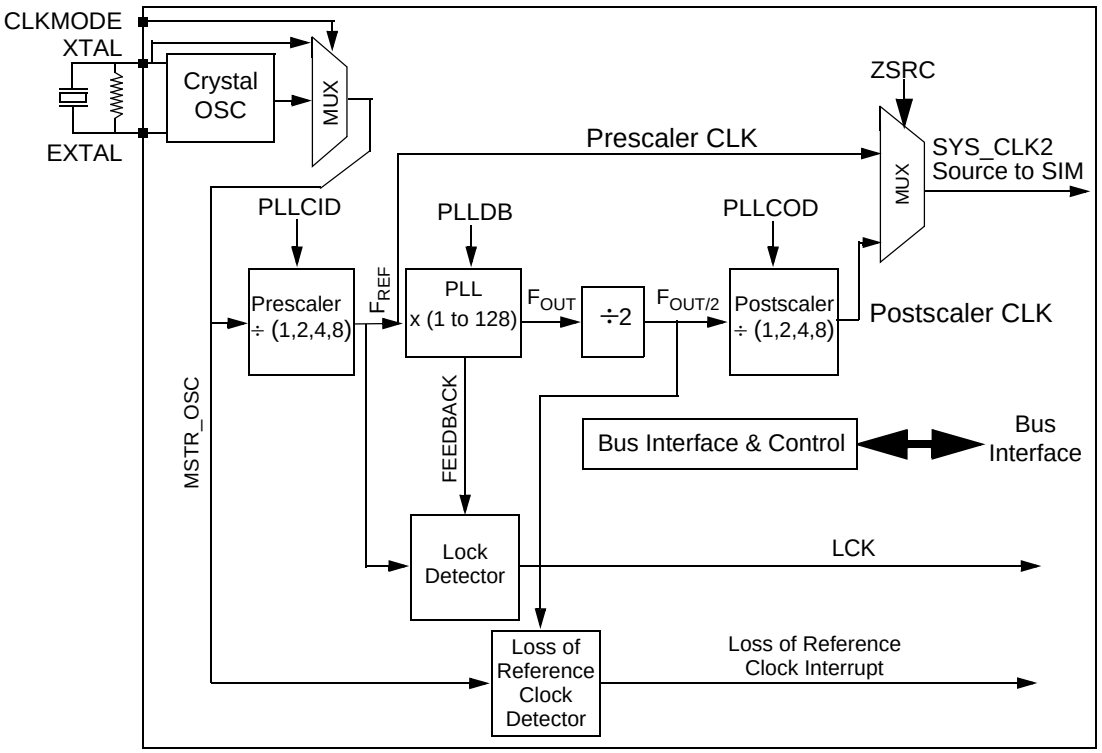

Figure 3-1 OCCS Block Diagram

3.2 External Clock Operation

The system clock can be derived from an external crystal, ceramic resonator, or an external system clock signal. To generate a reference frequency using the internal oscillator, a reference crystal or ceramic resonator, must be connected between the EXTAL and XTAL pins.

3.2.1 Crystal Oscillator

The internal oscillator is designed to interface with a parallel-resonant crystal resonator in the frequency range specified for the external crystal in **Table 10-15**. A recommended crystal oscillator circuit is shown in **Figure 3-2**. Follow the crystal supplier's recommendations when selecting a crystal, since crystal parameters determine the component values required to provide maximum stability and reliable start-up.

The crystal and associated components should be mounted as near as possible to the EXTAL and XTAL pins to minimize output distortion and start-up stabilization time.

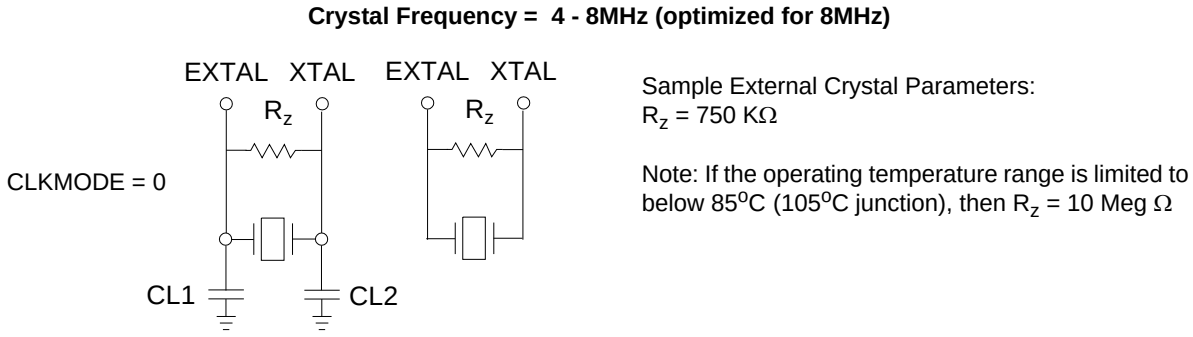

Figure 3-2 Connecting to a Crystal Oscillator

Note: The OCCS_COHL bit must be set to 1 when a crystal oscillator is used. The reset condition on the OCCS_COHL bit is 0. Please see the COHL bit in the Oscillator Control (OSCTL) register, discussed in the **56F8300 Peripheral User Manual**.

3.2.2 Ceramic Resonator (Default)

It is also possible to drive the internal oscillator with a ceramic resonator, assuming the overall system design can tolerate the reduced signal integrity. A typical ceramic resonator circuit is shown in **Figure 3-3**. Refer to the supplier's recommendations when selecting a ceramic resonator and associated components. The resonator and components should be mounted as near as possible to the EXTAL and XTAL pins.

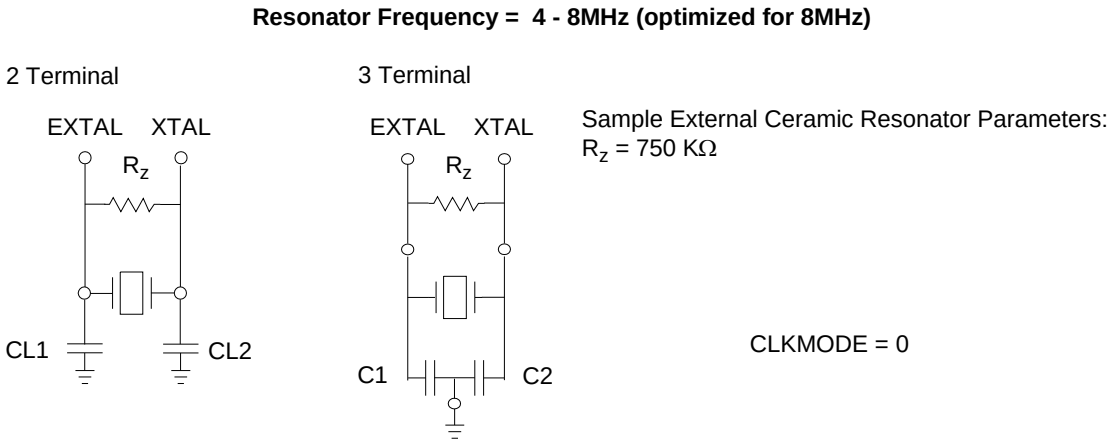

Figure 3-3 Connecting a Ceramic Resonator

Note: The OCCS_COHL bit must be set to 0 when a ceramic resonator is used. The reset condition on the OCCS_COHL bit is 0. Please see the COHL bit in the Oscillator Control (OSCTL) register, discussed in the **56F8300 Peripheral User Manual**.

3.2.3 External Clock Source

The recommended method of connecting an external clock is illustrated in **Figure 3-4**. The external clock source is connected to XTAL and the EXTAL pin is grounded. Set OCCS_COHL bit high when using an external clock source as well.

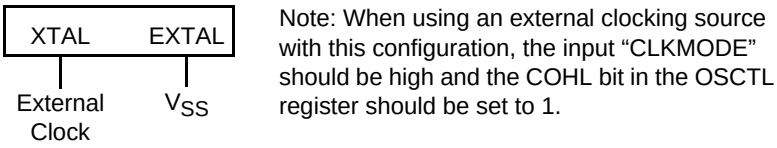

Figure 3-4 Connecting an External Clock Register

3.3 Registers

When referring to the register definitions for the OCCS in the **56F8300 Peripheral User Manual**, use the register definitions **without** the internal Relaxation Oscillator, since the 56F8346/56F8146 devices do NOT contain this oscillator.

Part 4 Memory Map

4.1 Introduction

The 56F8346 and 56F8146 devices are 16-bit motor-control chips based on the 56800E core. These parts use a Harvard-style architecture with two independent memory spaces for Data and Program. On-chip RAM and Flash memories are used in both spaces.

This section provides memory maps for:

- Program Address Space, including the Interrupt Vector Table
- Data Address Space, including the EOnCE Memory and Peripheral Memory Maps

On-chip memory sizes for each device are summarized in **Table 4-1.** Flash memories' restrictions are identified in the "Use Restrictions" column of **Table 4-1.**

Note: *Data Flash and Program RAM are NOT available on the 56F8146 device.*

Table 4-1 Chip Memory Configurations

On-Chip Memory	56F8346	56F8146	Use Restrictions
Program Flash	128KB	128KB	Erase / Program via Flash interface unit and word writes to CDBW
Data Flash	8KB	—	Erase / Program via Flash interface unit and word writes to CDBW. Data Flash can be read via either CDBR or XDB2, but not by both simultaneously
Program RAM	4KB	—	None

Table 4-1 Chip Memory Configurations

On-Chip Memory	56F8346	56F8146	Use Restrictions
Data RAM	8KB	8KB	None
Program Boot Flash	8KB	8KB	Erase / Program via Flash Interface unit and word to CDBW

4.2 Program Map

The operating mode control bits (MA and MB) in the Operating Mode Register (OMR) control the Program memory map. At reset, these bits are set as indicated in **Table 4-2**. **Table 4-4** shows the memory map configurations that are possible at reset. After reset, the OMR MA bit can be changed and will have an effect on the P-space memory map, as shown in **Table 4-3**. Changing the OMR MB bit will have no effect.

Table 4-2 OMR MB/MA Value at Reset

OMR MB = Flash Secured State[1, 2]	OMR MA = EXTBOOT Pin	Chip Operating Mode
0	0	Mode 0 – Internal Boot; EMI is configured to use 16 address lines; Flash Memory is secured; external P-space is not allowed; the EOnCE is disabled
0	1	Not valid; cannot boot externally if the Flash is secured and will actually configure to 00 state
1	0	Mode 0 – Internal Boot; EMI is configured to use 16 address lines
1	1	Mode 1 – External Boot; Flash Memory is not secured; EMI configuration is determined by the state of the EMI_MODE pin

1. This bit is only configured at reset. If the Flash secured state changes, this will not be reflected in MB until the next reset.
2. Changing MB in software will not affect Flash memory security.

Table 4-3 Changing OMR MA Value During Normal Operation

OMR MA	Chip Operating Mode
0	Use internal P-space memory map configuration
1	Use external P-space memory map configuration – If MB = 0 at reset, changing this bit has no effect.

The device's external memory interface (EMI) can operate much like the 56F80x family's EMI, or it can be operated in a mode similar to that used on other products in the 56800E family. Initially, $\overline{CS0}$ and $\overline{CS1}$ are configured as $\overline{PS}$ and $\overline{DS}$, in a mode compatible with earlier 56800 devices.

Eighteen address lines are required to shadow the first 192K of internal program space when booting externally for development purposes. Therefore, the entire complement of on-chip memory cannot be accessed using a 16-bit 56800-compatible address bus. To address this situation, the EMI_MODE pin can be used to configure four GPIO pins as Address[19:16] upon reset (only one of these pins [A16] is usable

in the 56F8346/56F8146).

The EMI_MODE pin also affects the reset vector address, as provided in **Table 4-4.** Additional pins must be configured as address or chip select signals to access addresses at P:$10 0000 and above.

Note: *Program RAM is NOT available on the 56F8146 device.*

Table 4-4 Program Memory Map at Reset

Begin/End Address	Mode 0 (MA = 0)	Mode 1[1] (MA = 1)	
	Internal Boot	External Boot	
	Internal Boot 16-Bit External Address Bus	EMI_MODE = 0[2,3] 16-Bit External Address Bus	EMI_MODE = 1[4] 20-Bit External Address Bus
P:$1F FFFF P:$10 0000	External Program Memory[5]	External Program Memory[5]	External Program Memory[5]
P:$0F FFFF P:$03 0000			External Program RAM COP Reset Address = 02 0002[6] Boot Location = 02 0000[6]
P:$02 FFFF P:$02 F800	*On-Chip Program RAM* 4KB		
P:$02 F7FF P:$02 1000	Reserved 116KB		
P:$02 0FFF P:$02 0000	Boot Flash 8KB COP Reset Address = 02 0002 Boot Location = 02 0000	Boot Flash 8KB (Not Used for Boot in this Mode)	
P:$01 FFFF P:$01 0000	External Program RAM[5]	Internal Program Flash[7] 128KB	
P:$00 FFFF P:$00 0000	Internal Program Flash 128KB	External Program RAM COP Reset Address = 00 0002 Boot Location = 00 0000	

1. If Flash Security Mode is enabled, EXTBOOT Mode 1 cannot be used. See **Security Features, Part 7**.
2. This mode provides maximum compatibility with 56F80x parts while operating externally.
3. “EMI_MODE =0” when EMI_MODE pin is tied to ground at boot up.
4. “EMI_MODE =1” when EMI_MODE pin is tied to V_{DD} at boot up.
5. Not accessible in reset configuration, since the address is above P:$00 FFFF. The higher bit address/GPIO (and/or chip selects) pins must be reconfigured before this external memory is accessible.
6. Booting from this external address allows prototyping of the internal Boot Flash.
7. The internal Program Flash is relocated in this mode making it accessible.

4.3 Interrupt Vector Table

Table 4-5 provides the reset and interrupt priority structure, including on-chip peripherals. The table is organized with higher-priority vectors at the top and lower-priority interrupts lower in the table. The priority of an interrupt can be assigned to different levels, as indicated, allowing some control over

interrupt priorities. All level 3 interrupts will be serviced before level 2, and so on. For a selected priority level, the lowest vector number has the highest priority.

The location of the vector table is determined by the Vector Base Address (VBA) register. Please see **Part 5.6.12** for the reset value of the VBA.

In some configurations, the reset address and COP reset address will correspond to vector 0 and 1 of the interrupt vector table. In these instances, the first two locations in the vector table must contain branch or JMP instructions. All other entries must contain JSR instructions.

Note: *PWMA, FlexCAN, Quadrature Decoder 1, and Quad Timers B and D are NOT available on the 56F8146 device.*

Table 4-5 Interrupt Vector Table Contents[1]

Peripheral	Vector Number	Priority Level	Vector Base Address +	Interrupt Function
				Reserved for Reset Overlay[2]
				Reserved for COP Reset Overlay[2]
core	2	3	P:$04	Illegal Instruction
core	3	3	P:$06	SW Interrupt 3
core	4	3	P:$08	HW Stack Overflow
core	5	3	P:$0A	Misaligned Long Word Access
core	6	1-3	P:$0C	OnCE Step Counter
core	7	1-3	P:$0E	OnCE Breakpoint Unit 0
				Reserved
core	9	1-3	P:$12	OnCE Trace Buffer
core	10	1-3	P:$14	OnCE Transmit Register Empty
core	11	1-3	P:$16	OnCE Receive Register Full
				Reserved
core	14	2	P:$1C	SW Interrupt 2
core	15	1	P:$1E	SW Interrupt 1
core	16	0	P:$20	SW Interrupt 0
core	17	0-2	P:$22	IRQA
core	18	0-2	P:$24	IRQB
				Reserved
LVI	20	0-2	P:$28	Low Voltage Detector (power sense)
PLL	21	0-2	P:$2A	PLL

Table 4-5 Interrupt Vector Table Contents[1] (Continued)

Peripheral	Vector Number	Priority Level	Vector Base Address +	Interrupt Function
FM	22	0-2	P:$2C	FM Access Error Interrupt
FM	23	0-2	P:$2E	FM Command Complete
FM	24	0-2	P:$30	FM Command, data and address Buffers Empty
				Reserved
FLEXCAN	26	0-2	P:$34	FLEXCAN Bus Off
FLEXCAN	27	0-2	P:$36	FLEXCAN Error
FLEXCAN	28	0-2	P:$38	FLEXCAN Wake Up
FLEXCAN	29	0-2	P:$3A	FLEXCAN Message Buffer Interrupt
GPIOF	30	0-2	P:$3C	GPIOF
GPIOE	31	0-2	P:$3E	GPIOE
GPIOD	32	0-2	P:$40	GPIOD
GPIOC	33	0-2	P:$42	GPIOC
GPIOB	34	0-2	P:$44	GPIOB
GPIOA	35	0-2	P:$46	GPIOA
				Reserved
SPI1	38	0-2	P:$4C	SPI 1 Receiver Full
SPI1	39	0-2	P:$4E	SPI 1 Transmitter Empty
SPI0	40	0-2	P:$50	SPI 0 Receiver Full
SPI0	41	0-2	P:$52	SPI 0 Transmitter Empty
SCI1	42	0-2	P:$54	SCI 1 Transmitter Empty
SCI1	43	0-2	P:$56	SCI 1 Transmitter Idle
				Reserved
SCI1	45	0-2	P:$5A	SCI 1 Receiver Error
SCI1	46	0-2	P:$5C	SCI 1 Receiver Full
DEC1	47	0-2	P:$5E	Quadrature Decoder #1 Home Switch or Watchdog
DEC1	48	0-2	P:$60	Quadrature Decoder #1 INDEX Pulse
DEC0	49	0-2	P:$62	Quadrature Decoder #0 Home Switch or Watchdog

Table 4-5 Interrupt Vector Table Contents[1] (Continued)

Peripheral	Vector Number	Priority Level	Vector Base Address +	Interrupt Function
DEC0	50	0-2	P:$64	Quadrature Decoder #0 INDEX Pulse
				Reserved
TMRD	52	0-2	P:$68	Timer D, Channel 0
TMRD	53	0-2	P:$6A	Timer D, Channel 1
TMRD	54	0-2	P:$6C	Timer D, Channel 2
TMRD	55	0-2	P:$6E	Timer D, Channel 3
TMRC	56	0-2	P:$70	Timer C, Channel 0
TMRC	57	0-2	P:$72	Timer C, Channel 1
TMRC	58	0-2	P:$74	Timer C, Channel 2
TMRC	59	0-2	P:$76	Timer C, Channel 3
TMRB	60	0-2	P:$78	Timer B, Channel 0
TMRB	61	0-2	P:$7A	Timer B, Channel 1
TMRB	62	0-2	P:$7C	Timer B, Channel 2
TMRB	63	0-2	P:$7E	Timer B, Channel 3
TMRA	64	0-2	P:$80	Timer A, Channel 0
TMRA	65	0-2	P:$82	Timer A, Channel 1
TMRA	66	0-2	P:$84	Timer A, Channel 2
TMRA	67	0-2	P:$86	Timer A, Channel 3
SCI0	68	0-2	P:$88	SCI 0 Transmitter Empty
SCI0	69	0-2	P:$8A	SCI 0 Transmitter Idle
				Reserved
SCI0	71	0-2	P:$8E	SCI 0 Receiver Error
SCI0	72	0-2	P:$90	SCI 0 Receiver Full
ADCB	73	0-2	P:$92	ADC B Conversion Compete / End of Scan
ADCA	74	0-2	P:$94	ADC A Conversion Complete / End of Scan
ADCB	75	0-2	P:$96	ADC B Zero Crossing or Limit Error
ADCA	76	0-2	P:$98	ADC A Zero Crossing or Limit Error
PWMB	77	0-2	P:$9A	Reload PWM B
PWMA	78	0-2	P:$9C	Reload PWM A
PWMB	79	0-2	P:$9E	PWM B Fault
PWMA	80	0-2	P:$A0	PWM A Fault
core	81	- 1	P:$A2	SW Interrupt LP

1. Two words are allocated for each entry in the vector table. This does not allow the full address range to be referenced from the vector table, providing only 19 bits of address.
2. If the VBA is set to 0200 (or VBA = 0000 for Mode 1, EMI_MODE = 0), the first two locations of the vector table are the chip reset addresses; therefore, these locations are not interrupt vectors.

4.4 Data Map

Note: *Data Flash is NOT available on the 56F8146 device.*

Table 4-6 Data Memory Map[1]

Begin/End Address	EX = 0[2]	EX = 1
X:$FF FFFF X:$FF FF00	EOnCE 256 locations allocated	EOnCE 256 locations allocated
X:$FF FEFF X:$01 0000	External Memory	External Memory
X:$00 FFFF X:$00 F000	On-Chip Peripherals 4096 locations allocated	On-Chip Peripherals 4096 locations allocated
X:$00 EFFF X:$00 2000	External Memory	External Memory
X:$00 1FFF X:$00 1000	*On-Chip Data Flash* 8KB	
X:$00 0FFF X:$00 0000	On-Chip Data RAM 8KB[3]	

1. All addresses are 16-bit Word addresses, not byte addresses.
2. In the Operating Mode Register (OMR).
3. The Data RAM is organized as a 2K x 32-bit memory to allow single-cycle long-word operations.

4.5 Flash Memory Map

Figure 4-1 illustrates the Flash Memory (FM) map on the system bus.

The Flash Memory is divided into three functional blocks. The Program and boot memories reside on the

Program Memory buses. They are controlled by one set of banked registers. Data Memory Flash resides on the Data Memory buses and is controlled separately by own set of banked registers.

The top nine words of the Program Memory Flash are treated as special memory locations. The content of these words is used to control the operation of the Flash Controller. Because these words are part of the Flash Memory content, their state is maintained during power-down and reset. During chip initialization, the content of these memory locations is loaded into Flash Memory control registers, detailed in the Flash Memory chapter of the **56F8300 Peripheral User Manual**. These configuration parameters are located between $00_FFF7 and $00_FFFF.

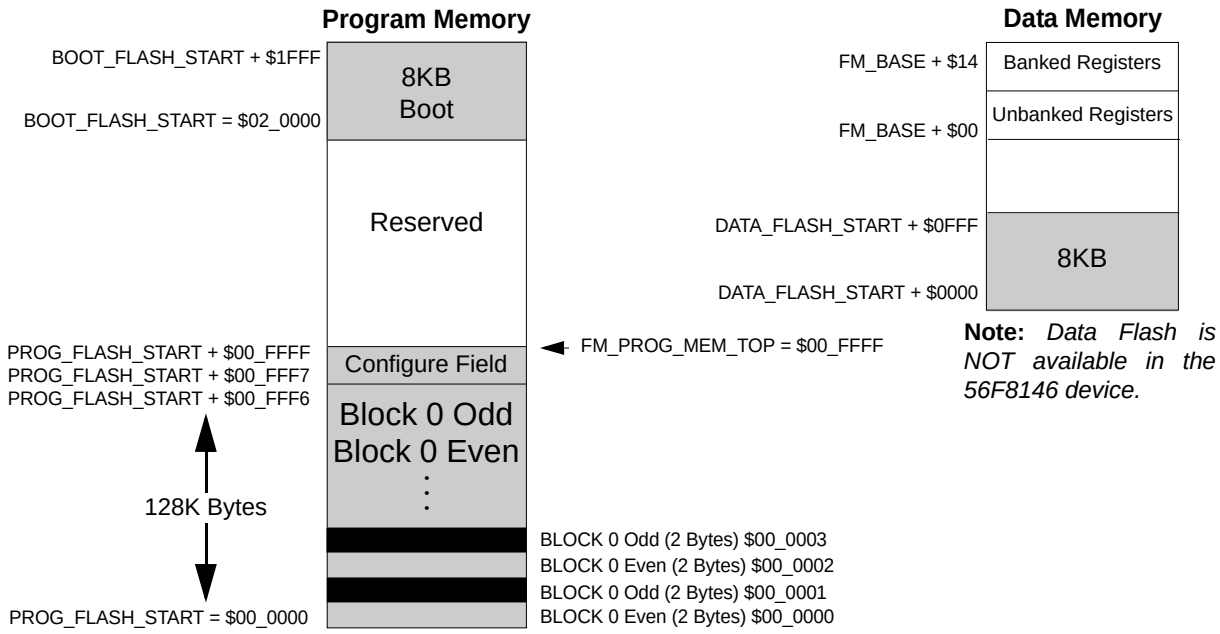

Figure 4-1 Flash Array Memory Maps

Table 4-7 shows the page and sector sizes used within each Flash memory block on the chip.

Note: *Data Flash is NOT available on the 56F8146 device.*

Table 4-7. Flash Memory Partitions

	Flash Size	Sectors	Sector Size	Page Size
Program Flash	128KB	16	4K x 16 bits	512 x 16 bits
Data Flash	8KB	16	256 x 16 bits	256 x 16 bits
Boot Flash	8KB	4	1K x 16 bits	256 x 16 bits

Please see **56F8300 Peripheral User Manual** for additional Flash information.

4.6 EOnCE Memory Map

Table 4-8 EOnCE Memory Map

Address	Register Acronym	Register Name
		Reserved
X:$FF FF8A	OESCR	External Signal Control Register
		Reserved
X:$FF FF8E	OBCNTR	Breakpoint Unit [0] Counter
		Reserved
X:$FF FF90	OBMSK (32 bits)	Breakpoint 1 Unit [0] Mask Register
X:$FF FF91	—	Breakpoint 1 Unit [0] Mask Register
X:$FF FF92	OBAR2 (32 bits)	Breakpoint 2 Unit [0] Address Register
X:$FF FF93	—	Breakpoint 2 Unit [0] Address Register
X:$FF FF94	OBAR1 (24 bits)	Breakpoint 1 Unit [0] Address Register
X:$FF FF95	—	Breakpoint 1 Unit [0] Address Register
X:$FF FF96	OBCR (24 bits)	Breakpoint Unit [0] Control Register
X:$FF FF97	—	Breakpoint Unit [0] Control Register
X:$FF FF98	OTB (21-24 bits/stage)	Trace Buffer Register Stages
X:$FF FF99	—	Trace Buffer Register Stages
X:$FF FF9A	OTBPR (8 bits)	Trace Buffer Pointer Register
X:$FF FF9B	OTBCR	Trace Buffer Control Register
X:$FF FF9C	OBASE (8 bits)	Peripheral Base Address Register
X:$FF FF9D	OSR	Status Register
X:$FF FF9E	OSCNTR (24 bits)	Instruction Step Counter
X:$FF FF9F	—	Instruction Step Counter
X:$FF FFA0	OCR (bits)	Control Register
		Reserved
X:$FF FFFC	OCLSR (8 bits)	Core Lock / Unlock Status Register
X:$FF FFFD	OTXRXSR (8 bits)	Transmit and Receive Status and Control Register
X:$FF FFFE	OTX / ORX (32 bits)	Transmit Register / Receive Register
X:$FF FFFF	OTX1 / ORX1	Transmit Register Upper Word Receive Register Upper Word

4.7 Peripheral Memory Mapped Registers

On-chip peripheral registers are part of the data memory map on the 56800E series. These locations may be accessed with the same addressing modes used for ordinary Data memory, except all peripheral registers should be read/written using word accesses only.

Table 4-9 summarizes base addresses for the set of peripherals on the 56F8346 and 56F8146 devices. Peripherals are listed in order of the base address.

The following tables list all of the peripheral registers required to control or access the peripherals.

Note: *Features in italics are NOT available on the 56F8146 device.*

Table 4-9 Data Memory Peripheral Base Address Map Summary

Peripheral	Prefix	Base Address	Table Number
External Memory Interface	EMI	X:$00 F020	4-10
Timer A	TMRA	X:$00 F040	4-11
Timer B	TMRB	X:$00 F080	4-12
Timer C	TMRC	X:$00 F0C0	4-13
Timer D	TMRD	X:$00 F100	4-14
PWM A	PWMA	X:$00 F140	4-15
PWM B	PWMB	X:$00 F160	4-16
Quadrature Decoder 0	DEC0	X:$00 F180	4-17
Quadrature Decoder 1	DEC1	X:$00 F190	4-18
ITCN	ITCN	X:$00 F1A0	4-19
ADC A	ADCA	X:$00 F200	4-20
ADC B	ADCB	X:$00 F240	4-21
Temperature Sensor	TSENSOR	X:$00 F270	4-22
SCI #0	SCI0	X:$00 F280	4-23
SCI #1	SCI1	X:$00 F290	4-24
SPI #0	SPI0	X:$00 F2A0	4-25
SPI #1	SPI1	X:$00 F2B0	4-26
COP	COP	X:$00 F2C0	4-27
PLL, OSC	CLKGEN	X:$00 F2D0	4-28
GPIO Port A	GPIOA	X:$00 F2E0	4-29
GPIO Port B	GPIOB	X:$00 F300	4-30
GPIO Port C	GPIOC	X:$00 F310	4-31
GPIO Port D	GPIOD	X:$00 F320	4-32

Table 4-9 Data Memory Peripheral Base Address Map Summary (Continued)

Peripheral	Prefix	Base Address	Table Number
GPIO Port E	GPIOE	X:$00 F330	4-33
GPIO Port F	GPIOF	X:$00 F340	4-34
SIM	SIM	X:$00 F350	4-35
Power Supervisor	LVI	X:$00 F360	4-36
FM	FM	X:$00 F400	4-37
FlexCAN	FC	X:$00 F800	4-38

Table 4-10 External Memory Integration Registers Address Map (EMI_BASE = $00 F020)

Register Acronym	Address Offset	Register Description	Reset Value
CSBAR 0	$0	Chip Select Base Address Register 0	0x0004 = 64K when EXT_BOOT = 0 or EMI_MODE = 0 0x0008 = 1M when EMI_MODE = 1 (Selects entire program space for CS0) Note that A17-A19 are not available in the package
CSBAR 1	$1	Chip Select Base Address Register 1	0x0004 = 64K when EMI_MODE = 0 0x0008 = 1M when EMI_MODE = 1 (Selects A0-A19 addressable data space for CS1) Note that A17-A19 are not available in the package
CSBAR 2	$2	Chip Select Base Address Register 2	
CSBAR 3	$3	Chip Select Base Address Register 3	
CSBAR 4	$4	Chip Select Base Address Register 4	
CSBAR 5	$5	Chip Select Base Address Register 5	
CSBAR 6	$6	Chip Select Base Address Register 6	
CSBAR 7	$7	Chip Select Base Address Register 7	

Table 4-10 External Memory Integration Registers Address Map (Continued) (EMI_BASE = $00 F020)

Register Acronym	Address Offset	Register Description	Reset Value
CSOR 0	$8	Chip Select Option Register 0	0x5FCB programmed for chip select for program space, word wide, read and write, 11 waits
CSOR 1	$9	Chip Select Option Register 1	0x5FAB programmed for chip select for data space, word wide, read and write, 11 waits
CSOR 2	$A	Chip Select Option Register 2	
CSOR 3	$B	Chip Select Option Register 3	
CSOR 4	$C	Chip Select Option Register 4	
CSOR 5	$D	Chip Select Option Register 5	
CSOR 6	$E	Chip Select Option Register 6	
CSOR 7	$F	Chip Select Option Register 7	
CSTC 0	$10	Chip Select Timing Control Register 0	
CSTC 1	$11	Chip Select Timing Control Register 1	
CSTC 2	$12	Chip Select Timing Control Register 2	
CSTC 3	$13	Chip Select Timing Control Register 3	
CSTC 4	$14	Chip Select Timing Control Register 4	
CSTC 5	$15	Chip Select Timing Control Register 5	
CSTC 6	$16	Chip Select Timing Control Register 6	
CSTC 7	$17	Chip Select Timing Control Register 7	
BCR	$18	Bus Control Register	0x016B sets the default number of wait states to 11 for both read and write accesses

Table 4-11 Quad Timer A Registers Address Map (TMRA_BASE = $00 F040)

Register Acronym	Address Offset	Register Description
TMRA0_CMP1	$0	Compare Register 1
TMRA0_CMP2	$1	Compare Register 2
TMRA0_CAP	$2	Capture Register
TMRA0_LOAD	$3	Load Register
TMRA0_HOLD	$4	Hold Register

Table 4-11 Quad Timer A Registers Address Map (Continued) (TMRA_BASE = $00 F040)

Register Acronym	Address Offset	Register Description
TMRA0_CNTR	$5	Counter Register
TMRA0_CTRL	$6	Control Register
TMRA0_SCR	$7	Status and Control Register
TMRA0_CMPLD1	$8	Comparator Load Register 1
TMRA0_CMPLD2	$9	Comparator Load Register 2
TMRA0_COMSCR	$A	Comparator Status and Control Register
		Reserve
TMRA1_CMP1	$10	Compare Register 1
TMRA1_CMP2	$11	Compare Register 2
TMRA1_CAP	$12	Capture Register
TMRA1_LOAD	$13	Load Register
TMRA1_HOLD	$14	Hold Register
TMRA1_CNTR	$15	Counter Register
TMRA1_CTRL	$16	Control Register
TMRA1_SCR	$17	Status and Control Register
TMRA1_CMPLD1	$18	Comparator Load Register 1
TMRA1_CMPLD2	$19	Comparator Load Register 2
TMRA1_COMSCR	$1A	Comparator Status and Control Register
		Reserved
TMRA2_CMP1	$20	Compare Register 1
TMRA2_CMP2	$21	Compare Register 2
TMRA2_CAP	$22	Capture Register
TMRA2_LOAD	$23	Load Register
TMRA2_HOLD	$24	Hold Register
TMRA2_CNTR	$25	Counter Register
TMRA2_CTRL	$26	Control Register
TMRA2_SCR	$27	Status and Control Register
TMRA2_CMPLD1	$28	Comparator Load Register 1
TMRA2_CMPLD2	$29	Comparator Load Register 2
TMRA2_COMSCR	$2A	Comparator Status and Control Register
		Reserved
TMRA3_CMP1	$30	Compare Register 1

Table 4-11 Quad Timer A Registers Address Map (Continued) (TMRA_BASE = $00 F040)

Register Acronym	Address Offset	Register Description
TMRA3_CMP2	$31	Compare Register 2
TMRA3_CAP	$32	Capture Register
TMRA3_LOAD	$33	Load Register
TMRA3_HOLD	$34	Hold Register
TMRA3_CNTR	$35	Counter Register
TMRA3_CTRL	$36	Control Register
TMRA3_SCR	$37	Status and Control Register
TMRA3_CMPLD1	$38	Comparator Load Register 1
TMRA3_CMPLD2	$39	Comparator Load Register 2
TMRA3_COMSC	$3A	Comparator Status and Control Register

Table 4-12 Quad Timer B Registers Address Map (TMRB_BASE = $00 F080)

Quad Timer B is NOT available in the 56F8146 device

Register Acronym	Address Offset	Register Description
TMRB0_CMP1	$0	Compare Register 1
TMRB0_CMP2	$1	Compare Register 2
TMRB0_CAP	$2	Capture Register
TMRB0_LOAD	$3	Load Register
TMRB0_HOLD	$4	Hold Register
TMRB0_CNTR	$5	Counter Register
TMRB0_CTRL	$6	Control Register
TMRB0_SCR	$7	Status and Control Register
TMRB0_CMPLD1	$8	Comparator Load Register 1
TMRB0_CMPLD2	$9	Comparator Load Register 2
TMRB0_COMSCR	$A	Comparator Status and Control Register
		Reserved
TMRB1_CMP1	$10	Compare Register 1
TMRB1_CMP2	$11	Compare Register 2
TMRB1_CAP	$12	Capture Register
TMRB1_LOAD	$13	Load Register
TMRB1_HOLD	$14	Hold Register

Table 4-12 Quad Timer B Registers Address Map (Continued)
(TMRB_BASE = $00 F080)
Quad Timer B is NOT available in the 56F8146 device

Register Acronym	Address Offset	Register Description
TMRB1_CNTR	$15	Counter Register
TMRB1_CTRL	$16	Control Register
TMRB1_SCR	$17	Status and Control Register
TMRB1_CMPLD1	$18	Comparator Load Register 1
TMRB1_CMPLD2	$19	Comparator Load Register 2
TMRB1_COMSCR	$1A	Comparator Status and Control Register
		Reserved
TMRB2_CMP1	$20	Compare Register 1
TMRB2_CMP2	$21	Compare Register 2
TMRB2_CAP	$22	Capture Register
TMRB2_LOAD	$23	Load Register
TMRB2_HOLD	$24	Hold Register
TMRB2_CNTR	$25	Counter Register
TMRB2_CTRL	$26	Control Register
TMRB2_SCR	$27	Status and Control Register
TMRB2_CMPLD1	$28	Comparator Load Register 1
TMRB2_CMPLD2	$29	Comparator Load Register 2
TMRB2_COMSCR	$2A	Comparator Status and Control Register
		Reserved
TMRB3_CMP1	$30	Compare Register 1
TMRB3_CMP2	$31	Compare Register 2
TMRB3_CAP	$32	Capture Register
TMRB3_LOAD	$33	Load Register
TMRB3_HOLD	$34	Hold Register
TMRB3_CNTR	$35	Counter Register
TMRB3_CTRL	$36	Control Register
TMRB3_SCR	$37	Status and Control Register
TMRB3_CMPLD1	$38	Comparator Load Register 1
TMRB3_CMPLD2	$39	Comparator Load Register 2
TMRB3_COMSCR	$3A	Comparator Status and Control Register

Table 4-13 Quad Timer C Registers Address Map (TMRC_BASE = $00 F0C0)

Register Acronym	Address Offset	Register Description
TMRC0_CMP1	$0	Compare Register 1
TMRC0_CMP2	$1	Compare Register 2
TMRC0_CAP	$2	Capture Register
TMRC0_LOAD	$3	Load Register
TMRC0_HOLD	$4	Hold Register
TMRC0_CNTR	$5	Counter Register
TMRC0_CTRL	$6	Control Register
TMRC0_SCR	$7	Status and Control Register
TMRC0_CMPLD1	$8	Comparator Load Register 1
TMRC0_CMPLD2	$9	Comparator Load Register 2
TMRC0_COMSCR	$A	Comparator Status and Control Register
		Reserved
TMRC1_CMP1	$10	Compare Register 1
TMRC1_CMP2	$11	Compare Register 2
TMRC1_CAP	$12	Capture Register
TMRC1_LOAD	$13	Load Register
TMRC1_HOLD	$14	Hold Register
TMRC1_CNTR	$15	Counter Register
TMRC1_CTRL	$16	Control Register
TMRC1_SCR	$17	Status and Control Register
TMRC1_CMPLD1	$18	Comparator Load Register 1
TMRC1_CMPLD2	$19	Comparator Load Register 2
TMRC1_COMSCR	$1A	Comparator Status and Control Register
		Reserved
TMRC2_CMP1	$20	Compare Register 1
TMRC2_CMP2	$21	Compare Register 2
TMRC2_CAP	$22	Capture Register
TMRC2_LOAD	$23	Load Register
TMRC2_HOLD	$24	Hold Register
TMRC2_CNTR	$25	Counter Register
TMRC2_CTRL	$26	Control Register

Table 4-13 Quad Timer C Registers Address Map (Continued)
(TMRC_BASE = $00 F0C0)

Register Acronym	Address Offset	Register Description
TMRC2_SCR	$27	Status and Control Register
TMRC2_CMPLD1	$28	Comparator Load Register 1
TMRC2_CMPLD2	$29	Comparator Load Register 2
TMRC2_COMSCR	$2A	Comparator Status and Control Register
		Reserved
TMRC3_CMP1	$30	Compare Register 1
TMRC3_CMP2	$31	Compare Register 2
TMRC3_CAP	$32	Capture Register
TMRC3_LOAD	$33	Load Register
TMRC3_HOLD	$34	Hold Register
TMRC3_CNTR	$35	Counter Register
TMRC3_CTRL	$36	Control Register
TMRC3_SCR	$37	Status and Control Register
TMRC3_CMPLD1	$38	Comparator Load Register 1
TMRC3_CMPLD2	$39	Comparator Load Register 2
TMRC3_COMSCR	$3A	Comparator Status and Control Register

Table 4-14 Quad Timer D Registers Address Map
(TMRD_BASE = $00 F100)
Quad Timer D is NOT available in the 56F8146 device

Register Acronym	Address Offset	Register Description
TMRD0_CMP1	$0	Compare Register 1
TMRD0_CMP2	$1	Compare Register 2
TMRD0_CAP	$2	Capture Register
TMRD0_LOAD	$3	Load Register
TMRD0_HOLD	$4	Hold Register
TMRD0_CNTR	$5	Counter Register
TMRD0_CTRL	$6	Control Register
TMRD0_SCR	$7	Status and Control Register
TMRD0_CMPLD1	$8	Comparator Load Register 1
TMRD0_CMPLD2	$9	Comparator Load Register 2
TMRD0_COMSCR	$A	Comparator Status and Control Register

Table 4-14 Quad Timer D Registers Address Map (Continued) (TMRD_BASE = $00 F100)

Quad Timer D is NOT available in the 56F8146 device

Register Acronym	Address Offset	Register Description
		Reserved
TMRD1_CMP1	$10	Compare Register 1
TMRD1_CMP2	$11	Compare Register 2
TMRD1_CAP	$12	Capture Register
TMRD1_LOAD	$13	Load Register
TMRD1_HOLD	$14	Hold Register
TMRD1_CNTR	$15	Counter Register
TMRD1_CTRL	$16	Control Register
TMRD1_SCR	$17	Status and Control Register
TMRD1_CMPLD1	$18	Comparator Load Register 1
TMRD1_CMPLD2	$19	Comparator Load Register 2
TMRD1_COMSCR	$1A	Comparator Status and Control Register
		Reserved
TMRD2_CMP1	$20	Compare Register 1
TMRD2_CMP2	$21	Compare Register 2
TMRD2_CAP	$22	Capture Register
TMRD2_LOAD	$23	Load Register
TMRD2_HOLD	$24	Hold Register
TMRD2_CNTR	$25	Counter Register
TMRD2_CTRL	$26	Control Register
TMRD2_SCR	$27	Status and Control Register
TMRD2_CMPLD1	$28	Comparator Load Register 1
TMRD2_CMPLD2	$29	Comparator Load Register 2
TMRD2_COMSCR	$2A	Comparator Status and Control Register
		Reserved
TMRD3_CMP1	$30	Compare Register 1
TMRD3_CMP2	$31	Compare Register 2
TMRD3_CAP	$32	Capture Register
TMRD3_LOAD	$33	Load Register
TMRD3_HOLD	$34	Hold Register
TMRD3_CNTR	$35	Counter Register

Table 4-14 Quad Timer D Registers Address Map (Continued)
(TMRD_BASE = $00 F100)
Quad Timer D is NOT available in the 56F8146 device

Register Acronym	Address Offset	Register Description
TMRD3_CTRL	$36	Control Register
TMRD3_SCR	$37	Status and Control Register
TMRD3_CMPLD1	$38	Comparator Load Register 1
TMRD3_CMPLD2	$39	Comparator Load Register 2
TMRD3_COMSCR	$3A	Comparator Status and Control Register

Table 4-15 Pulse Width Modulator A Registers Address Map
(PWMA_BASE = $00 F140)
PWMA is NOT available in the 56F8146 device

Register Acronym	Address Offset	Register Description
PWMA_PMCTL	$0	Control Register
PWMA_PMFCTL	$1	Fault Control Register
PWMA_PMFSA	$2	Fault Status Acknowledge Register
PWMA_PMOUT	$3	Output Control Register
PWMA_PMCNT	$4	Counter Register
PWMA_PWMCM	$5	Counter Modulo Register
PWMA_PWMVAL0	$6	Value Register 0
PWMA_PWMVAL1	$7	Value Register 1
PWMA_PWMVAL2	$8	Value Register 2
PWMA_PWMVAL3	$9	Value Register 3
PWMA_PWMVAL4	$A	Value Register 4
PWMA_PWMVAL5	$B	Value Register 5
PWMA_PMDEADTM	$C	Dead Time Register
PWMA_PMDISMAP1	$D	Disable Mapping Register 1
PWMA_PMDISMAP2	$E	Disable Mapping Register 2
PWMA_PMCFG	$F	Configure Register
PWMA_PMCCR	$10	Channel Control Register
PWMA_PMPORT	$11	Port Register
PWMA_PMICCR	$12	PWM Internal Correction Control Register

Table 4-16 Pulse Width Modulator B Registers Address Map (PWMB_BASE = $00 F160)

Register Acronym	Address Offset	Register Description
PWMB_PMCTL	$0	Control Register
PWMB_PMFCTL	$1	Fault Control Register
PWMB_PMFSA	$2	Fault Status Acknowledge Register
PWMB_PMOUT	$3	Output Control Register
PWMB_PMCNT	$4	Counter Register
PWMB_PWMCM	$5	Counter Modulo Register
PWMB_PWMVAL0	$6	Value Register 0
PWMB_PWMVAL1	$7	Value Register 1
PWMB_PWMVAL2	$8	Value Register 2
PWMB_PWMVAL3	$9	Value Register 3
PWMB_PWMVAL4	$A	Value Register 4
PWMB_PWMVAL5	$B	Value Register 5
PWMB_PMDEADTM	$C	Dead Time Register
PWMB_PMDISMAP1	$D	Disable Mapping Register 1
PWMB_PMDISMAP2	$E	Disable Mapping Register 2
PWMB_PMCFG	$F	Configure Register
PWMB_PMCCR	$10	Channel Control Register
PWMB_PMPORT	$11	Port Register
PWMB_PMICCR	$12	PWM Internal Correction Control Register

Table 4-17 Quadrature Decoder 0 Registers Address Map (DEC0_BASE = $00 F180)

Register Acronym	Address Offset	Register Description
DEC0_DECCR	$0	Decoder Control Register
DEC0_FIR	$1	Filter Interval Register
DEC0_WTR	$2	Watchdog Time-out Register
DEC0_POSD	$3	Position Difference Counter Register
DEC0_POSDH	$4	Position Difference Counter Hold Register

Table 4-17 Quadrature Decoder 0 Registers Address Map (Continued) (DEC0_BASE = $00 F180)

Register Acronym	Address Offset	Register Description
DEC0_REV	$5	Revolution Counter Register
DEC0_REVH	$6	Revolution Hold Register
DEC0_UPOS	$7	Upper Position Counter Register
DEC0_LPOS	$8	Lower Position Counter Register
DEC0_UPOSH	$9	Upper Position Hold Register
DEC0_LPOSH	$A	Lower Position Hold Register
DEC0_UIR	$B	Upper Initialization Register
DEC0_LIR	$C	Lower Initialization Register
DEC0_IMR	$D	Input Monitor Register

Table 4-18 Quadrature Decoder 1 Registers Address Map (DEC1_BASE = $00 F190)
Quadrature Decoder 1 is NOT available on the 56F8146 device

Register Acronym	Address Offset	Register Description
DEC1_DECCR	$0	Decoder Control Register
DEC1_FIR	$1	Filter Interval Register
DEC1_WTR	$2	Watchdog Time-out Register
DEC1_POSD	$3	Position Difference Counter Register
DEC1_POSDH	$4	Position Difference Counter Hold Register
DEC1_REV	$5	Revolution Counter Register
DEC1_REVH	$6	Revolution Hold Register
DEC1_UPOS	$7	Upper Position Counter Register
DEC1_LPOS	$8	Lower Position Counter Register
DEC1_UPOSH	$9	Upper Position Hold Register
DEC1_LPOSH	$A	Lower Position Hold Register
DEC1_UIR	$B	Upper Initialization Register
DEC1_LIR	$C	Lower Initialization Register
DEC1_IMR	$D	Input Monitor Register

Table 4-19 Interrupt Control Registers Address Map (ITCN_BASE = $00 F1A0)

Register Acronym	Address Offset	Register Description
IPR 0	$0	Interrupt Priority Register 0
IPR 1	$1	Interrupt Priority Register 1
IPR 2	$2	Interrupt Priority Register 2
IPR 3	$3	Interrupt Priority Register 3
IPR 4	$4	Interrupt Priority Register 4
IPR 5	$5	Interrupt Priority Register 5
IPR 6	$6	Interrupt Priority Register 6
IPR 7	$7	Interrupt Priority Register 7
IPR 8	$8	Interrupt Priority Register 8
IPR 9	$9	Interrupt Priority Register 9
VBA	$A	Vector Base Address Register
FIM0	$B	Fast Interrupt Match Register 0
FIVAL0	$C	Fast Interrupt Vector Address Low 0 Register
FIVAH0	$D	Fast Interrupt Vector Address High 0 Register
FIM1	$E	Fast Interrupt Match Register 1
FIVAL1	$F	Fast Interrupt Vector Address Low 1 Register
FIVAH1	$10	Fast Interrupt Vector Address High 1 Register
IRQP 0	$11	IRQ Pending Register 0
IRQP 1	$12	IRQ Pending Register 1
IRQP 2	$13	IRQ Pending Register 2
IRQP 3	$14	IRQ Pending Register 3
IRQP 4	$15	IRQ Pending Register 4
IRQP 5	$16	IRQ Pending Register 5
	$17	Reserved
ICTL	$1D	Interrupt Control Register

Table 4-20 Analog-to-Digital Converter Registers Address Map (ADCA_BASE = $00 F200)

Register Acronym	Address Offset	Register Description
ADCA_CR 1	$0	Control Register 1

Table 4-20 Analog-to-Digital Converter Registers Address Map (Continued) (ADCA_BASE = $00 F200)

Register Acronym	Address Offset	Register Description
ADCA_CR 2	$1	Control Register 2
ADCA_ZCC	$2	Zero Crossing Control Register
ADCA_LST 1	$3	Channel List Register 1
ADCA_LST 2	$4	Channel List Register 2
ADCA_SDIS	$5	Sample Disable Register
ADCA_STAT	$6	Status Register
ADCA_LSTAT	$7	Limit Status Register
ADCA_ZCSTAT	$8	Zero Crossing Status Register
ADCA_RSLT 0	$9	Result Register 0
ADCA_RSLT 1	$A	Result Register 1
ADCA_RSLT 2	$B	Result Register 2
ADCA_RSLT 3	$C	Result Register 3
ADCA_RSLT 4	$D	Result Register 4
ADCA_RSLT 5	$E	Result Register 5
ADCA_RSLT 6	$F	Result Register 6
ADCA_RSLT 7	$10	Result Register 7
ADCA_LLMT 0	$11	Low Limit Register 0
ADCA_LLMT 1	$12	Low Limit Register 1
ADCA_LLMT 2	$13	Low Limit Register 2
ADCA_LLMT 3	$14	Low Limit Register 3
ADCA_LLMT 4	$15	Low Limit Register 4
ADCA_LLMT 5	$16	Low Limit Register 5
ADCA_LLMT 6	$17	Low Limit Register 6
ADCA_LLMT 7	$18	Low Limit Register 7
ADCA_HLMT 0	$19	High Limit Register 0
ADCA_HLMT 1	$1A	High Limit Register 1
ADCA_HLMT 2	$1B	High Limit Register 2
ADCA_HLMT 3	$1C	High Limit Register 3
ADCA_HLMT 4	$1D	High Limit Register 4
ADCA_HLMT 5	$1E	High Limit Register 5
ADCA_HLMT 6	$1F	High Limit Register 6
ADCA_HLMT 7	$20	High Limit Register 7
ADCA_OFS 0	$21	Offset Register 0

Table 4-20 Analog-to-Digital Converter Registers Address Map (Continued) (ADCA_BASE = $00 F200)

Register Acronym	Address Offset	Register Description
ADCA_OFS 1	$22	Offset Register 1
ADCA_OFS 2	$23	Offset Register 2
ADCA_OFS 3	$24	Offset Register 3
ADCA_OFS 4	$25	Offset Register 4
ADCA_OFS 5	$26	Offset Register 5
ADCA_OFS 6	$27	Offset Register 6
ADCA_OFS 7	$28	Offset Register 7
ADCA_POWER	$29	Power Control Register
ADCA_CAL	$2A	ADC Calibration Register

Table 4-21 Analog-to-Digital Converter Registers Address Map (ADCB_BASE = $00 F240)

Register Acronym	Address Offset	Register Description
ADCB_CR 1	$0	Control Register 1
ADCB_CR 2	$1	Control Register 2
ADCB_ZCC	$2	Zero Crossing Control Register
ADCB_LST 1	$3	Channel List Register 1
ADCB_LST 2	$4	Channel List Register 2
ADCB_SDIS	$5	Sample Disable Register
ADCB_STAT	$6	Status Register
ADCB_LSTAT	$7	Limit Status Register
ADCB_ZCSTAT	$8	Zero Crossing Status Register
ADCB_RSLT 0	$9	Result Register 0
ADCB_RSLT 1	$A	Result Register 1
ADCB_RSLT 2	$B	Result Register 2
ADCB_RSLT 3	$C	Result Register 3
ADCB_RSLT 4	$D	Result Register 4
ADCB_RSLT 5	$E	Result Register 5
ADCB_RSLT 6	$F	Result Register 6
ADCB_RSLT 7	$10	Result Register 7
ADCB_LLMT 0	$11	Low Limit Register 0
ADCB_LLMT 1	$12	Low Limit Register 1
ADCB_LLMT 2	$13	Low Limit Register 2

Table 4-21 Analog-to-Digital Converter Registers Address Map (Continued) (ADCB_BASE = $00 F240)

Register Acronym	Address Offset	Register Description
ADCB_LLMT 3	$14	Low Limit Register 3
ADCB_LLMT 4	$15	Low Limit Register 4
ADCB_LLMT 5	$16	Low Limit Register 5
ADCB_LLMT 6	$17	Low Limit Register 6
ADCB_LLMT 7	$18	Low Limit Register 7
ADCB_HLMT 0	$19	High Limit Register 0
ADCB_HLMT 1	$1A	High Limit Register 1
ADCB_HLMT 2	$1B	High Limit Register 2
ADCB_HLMT 3	$1C	High Limit Register 3
ADCB_HLMT 4	$1D	High Limit Register 4
ADCB_HLMT 5	$1E	High Limit Register 5
ADCB_HLMT 6	$1F	High Limit Register 6
ADCB_HLMT 7	$20	High Limit Register 7
ADCB_OFS 0	$21	Offset Register 0
ADCB_OFS 1	$22	Offset Register 1
ADCB_OFS 2	$23	Offset Register 2
ADCB_OFS 3	$24	Offset Register 3
ADCB_OFS 4	$25	Offset Register 4
ADCB_OFS 5	$26	Offset Register 5
ADCB_OFS 6	$27	Offset Register 6
ADCB_OFS 7	$28	Offset Register 7
ADCB_POWER	$29	Power Control Register
ADCB_CAL	$2A	ADC Calibration Register

Table 4-22 Temperature Sensor Register Address Map (TSENSOR_BASE = $00 F270)
Temperature Sensor is NOT available in the 56F8146 device

Register Acronym	Address Offset	Register Description
TSENSOR_CNTL	$0	Control Register

Table 4-23 Serial Communication Interface 0 Registers Address Map (SCI0_BASE = $00 F280)

Register Acronym	Address Offset	Register Description
SCI0_SCIBR	$0	Baud Rate Register
SCI0_SCICR	$1	Control Register
		Reserved
SCI0_SCISR	$3	Status Register
SCI0_SCIDR	$4	Data Register

Table 4-24 Serial Communication Interface 1 Registers Address Map (SCI1_BASE = $00 F290)

Register Acronym	Address Offset	Register Description
SCI1_SCIBR	$0	Baud Rate Register
SCI1_SCICR	$1	Control Register
		Reserved
SCI1_SCISR	$3	Status Register
SCI1_SCIDR	$4	Data Register

Table 4-25 Serial Peripheral Interface 0 Registers Address Map (SPI0_BASE = $00 F2A0)

Register Acronym	Address Offset	Register Description
SPI0_SPSCR	$0	Status and Control Register
SPI0_SPDSR	$1	Data Size Register
SPI0_SPDRR	$2	Data Receive Register
SPI0_SPDTR	$3	Data Transmitter Register

Table 4-26 Serial Peripheral Interface 1 Registers Address Map (SPI1_BASE = $00 F2B0)

Register Acronym	Address Offset	Register Description
SPI1_SPSCR	$0	Status and Control Register
SPI1_SPDSR	$1	Data Size Register
SPI1_SPDRR	$2	Data Receive Register

Table 4-26 Serial Peripheral Interface 1 Registers Address Map (Continued) (SPI1_BASE = $00 F2B0)

Register Acronym	Address Offset	Register Description
SPI1_SPDTR	$3	Data Transmitter Register

Table 4-27 Computer Operating Properly Registers Address Map (COP_BASE = $00 F2C0)

Register Acronym	Address Offset	Register Description
COPCTL	$0	Control Register
COPTO	$1	Time Out Register
COPCTR	$2	Counter Register

Table 4-28 Clock Generation Module Registers Address Map (CLKGEN_BASE = $00 F2D0)

Register Acronym	Address Offset	Register Description
PLLCR	$0	Control Register
PLLDB	$1	Divide-By Register
PLLSR	$2	Status Register
		Reserved
SHUTDOWN	$4	Shutdown Register
OSCTL	$5	Oscillator Control Register

Table 4-29 GPIOA Registers Address Map (GPIOA_BASE = $00 F2E0)

Register Acronym	Address Offset	Register Description	Reset Value
GPIOA_PUR	$0	Pull-up Enable Register	0 x 3FFF
GPIOA_DR	$1	Data Register	0 x 0000
GPIOA_DDR	$2	Data Direction Register	0 x 0000
GPIOA_PER	$3	Peripheral Enable Register	0 x 3FFF
GPIOA_IAR	$4	Interrupt Assert Register	0 x 0000
GPIOA_IENR	$5	Interrupt Enable Register	0 x 0000
GPIOA_IPOLR	$6	Interrupt Polarity Register	0 x 0000
GPIOA_IPR	$7	Interrupt Pending Register	0 x 0000
GPIOA_IESR	$8	Interrupt Edge-Sensitive Register	0 x 0000

Table 4-29 GPIOA Registers Address Map (Continued) (GPIOA_BASE = $00 F2E0)

Register Acronym	Address Offset	Register Description	Reset Value
GPIOA_PPMODE	$9	Push-Pull Mode Register	0 x 3FFF
GPIOA_RAWDATA	$A	Raw Data Input Register	—

Table 4-30 GPIOB Registers Address Map (GPIOB_BASE = $00 F300)

Register Acronym	Address Offset	Register Description	Reset Value
GPIOB_PUR	$0	Pull-up Enable Register	0 x 00FF
GPIOB_DR	$1	Data Register	0 x 0000
GPIOB_DDR	$2	Data Direction Register	0 x 0000
GPIOB_PER	$3	Peripheral Enable Register	0 x 000F for 20-bit EMI address at reset. 0 x 0000 for all other cases. See Table 4-4 for details.
GPIOB_IAR	$4	Interrupt Assert Register	0 x 0000
GPIOB_IENR	$5	Interrupt Enable Register	0 x 0000
GPIOB_IPOLR	$6	Interrupt Polarity Register	0 x 0000
GPIOB_IPR	$7	Interrupt Pending Register	0 x 0000
GPIOB_IESR	$8	Interrupt Edge-Sensitive Register	0 x 0000
GPIOB_PPMODE	$9	Push-Pull Mode Register	0 x 00FF
GPIOB_RAWDATA	$A	Raw Data Input Register	—

Table 4-31 GPIOC Registers Address Map (GPIOC_BASE = $00 F310)

Register Acronym	Address Offset	Register Description	Reset Value
GPIOC_PUR	$0	Pull-up Enable Register	0 x 07FF
GPIOC_DR	$1	Data Register	0 x 0000
GPIOC_DDR	$2	Data Direction Register	0 x 0000
GPIOC_PER	$3	Peripheral Enable Register	0 x 07FF
GPIOC_IAR	$4	Interrupt Assert Register	0 x 0000
GPIOC_IENR	$5	Interrupt Enable Register	0 x 0000
GPIOC_IPOLR	$6	Interrupt Polarity Register	0 x 0000
GPIOC_IPR	$7	Interrupt Pending Register	0 x 0000

Table 4-31 GPIOC Registers Address Map (Continued)
(GPIOC_BASE = $00 F310)

Register Acronym	Address Offset	Register Description	Reset Value
GPIOC_IESR	$8	Interrupt Edge-Sensitive Register	0 x 0000
GPIOC_PPMODE	$9	Push-Pull Mode Register	0 x 07FF
GPIOC_RAWDATA	$A	Raw Data Input Register	—

Table 4-32 GPIOD Registers Address Map
(GPIOD_BASE = $00 F320)

Register Acronym	Address Offset	Register Description	Reset Value
GPIOD_PUR	$0	Pull-up Enable Register	0 x 1FFF
GPIOD_DR	$1	Data Register	0 x 0000
GPIOD_DDR	$2	Data Direction Register	0 x 0000
GPIOD_PER	$3	Peripheral Enable Register	0 x 1FC0
GPIOD_IAR	$4	Interrupt Assert Register	0 x 0000
GPIOD_IENR	$5	Interrupt Enable Register	0 x 0000
GPIOD_IPOLR	$6	Interrupt Polarity Register	0 x 0000
GPIOD_IPR	$7	Interrupt Pending Register	0 x 0000
GPIOD_IESR	$8	Interrupt Edge-Sensitive Register	0 x 0000
GPIOD_PPMODE	$9	Push-Pull Mode Register	0 x 1FFF
GPIOD_RAWDATA	$A	Raw Data Input Register	—

Table 4-33 GPIOE Registers Address Map
(GPIOE_BASE = $00 F330)

Register Acronym	Address Offset	Register Description	Reset Value
GPIOE_PUR	$0	Pull-up Enable Register	0 x 3FFF
GPIOE_DR	$1	Data Register	0 x 0000
GPIOE_DDR	$2	Data Direction Register	0 x 0000
GPIOE_PER	$3	Peripheral Enable Register	0 x 3FFF
GPIOE_IAR	$4	Interrupt Assert Register	0 x 0000
GPIOE_IENR	$5	Interrupt Enable Register	0 x 0000
GPIOE_IPOLR	$6	Interrupt Polarity Register	0 x 0000
GPIOE_IPR	$7	Interrupt Pending Register	0 x 0000
GPIOE_IESR	$8	Interrupt Edge-Sensitive Register	0 x 0000

Table 4-33 GPIOE Registers Address Map (Continued) (GPIOE_BASE = $00 F330)

Register Acronym	Address Offset	Register Description	Reset Value
GPIOE_PPMODE	$9	Push-Pull Mode Register	0 x 3FFF
GPIOE_RAWDATA	$A	Raw Data Input Register	—

Table 4-34 GPIOF Registers Address Map (GPIOF_BASE = $00 F340)

Register Acronym	Address Offset	Register Description	Reset Value
GPIOF_PUR	$0	Pull-up Enable Register	0 x FFFF
GPIOF_DR	$1	Data Register	0 x 0000
GPIOF_DDR	$2	Data Direction Register	0 x 0000
GPIOF_PER	$3	Peripheral Enable Register	0 x FFFF
GPIOF_IAR	$4	Interrupt Assert Register	0 x 0000
GPIOF_IENR	$5	Interrupt Enable Register	0 x 0000
GPIOF_IPOLR	$6	Interrupt Polarity Register	0 x 0000
GPIOF_IPR	$7	Interrupt Pending Register	0 x 0000
GPIOF_IESR	$8	Interrupt Edge-Sensitive Register	0 x 0000
GPIOF_PPMODE	$9	Push-Pull Mode Register	0 x FFFF
GPIOF_RAWDATA	$A	Raw Data Input Register	—

Table 4-35 System Integration Module Registers Address Map (SIM_BASE = $00 F350)

Register Acronym	Address Offset	Register Description
SIM_CONTROL	$0	Control Register
SIM_RSTSTS	$1	Reset Status Register
SIM_SCR0	$2	Software Control Register 0
SIM_SCR1	$3	Software Control Register 1
SIM_SCR2	$4	Software Control Register 2
SIM_SCR3	$5	Software Control Register 3
SIM_MSH_ID	$6	Most Significant Half JTAG ID
SIM_LSH_ID	$7	Least Significant Half JTAG ID
SIM_PUDR	$8	Pull-up Disable Register
		Reserved

Table 4-35 System Integration Module Registers Address Map (Continued)
(SIM_BASE = $00 F350)

Register Acronym	Address Offset	Register Description
SIM_CLKOSR	$A	Clock Out Select Register
SIM_GPS	$B	Quad Decoder 1 / Timer B / SPI 1 Select Register
SIM_PCE	$C	Peripheral Clock Enable Register
SIM_ISALH	$D	I/O Short Address Location High Register
SIM_ISALL	$E	I/O Short Address Location Low Register

Table 4-36 Power Supervisor Registers Address Map
(LVI_BASE = $00 F360)

Register Acronym	Address Offset	Register Description
LVI_CONTROL	$0	Control Register
LVI_STATUS	$1	Status Register

Table 4-37 Flash Module Registers Address Map
(FM_BASE = $00 F400)

Register Acronym	Address Offset	Register Description
FMCLKD	$0	Clock Divider Register
FMMCR	$1	Module Control Register
		Reserved
FMSECH	$3	Security High Half Register
FMSECL	$4	Security Low Half Register
		Reserved
		Reserved
FMPROT	$10	Protection Register (Banked)
FMPROTB	$11	Protection Boot Register (Banked)
		Reserved
FMUSTAT	$13	User Status Register (Banked)
FMCMD	$14	Command Register (Banked)
		Reserved
		Reserved
FMOPT 0	$1A	16-Bit Information Option Register 0 Hot temperature ADC reading of Temperature Sensor; value set during factory test

Table 4-37 Flash Module Registers Address Map (Continued) (FM_BASE = $00 F400)

Register Acronym	Address Offset	Register Description
FMOPT 1	$1B	16-Bit Information Option Register 1 Not used
FMOPT 2	$1C	16-Bit Information Option Register 2 Room temperature ADC reading of Temperature Sensor; value set during factory test

Table 4-38 FlexCAN Registers Address Map (FC_BASE = $00 F800)
FlexCAN is NOT available in the 56F8146 device

Register Acronym	Address Offset	Register Description
FCMCR	$0	Module Configuration Register
		Reserved
FCCTL0	$3	Control Register 0 Register
FCCTL1	$4	Control Register 1 Register
FCTMR	$5	Free-Running Timer Register
FCMAXMB	$6	Maximum Message Buffer Configuration Register
		Reserved
FCRXGMASK_H	$8	Receive Global Mask High Register
FCRXGMASK_L	$9	Receive Global Mask Low Register
FCRX14MASK_H	$A	Receive Buffer 14 Mask High Register
FCRX14MASK_L	$B	Receive Buffer 14 Mask Low Register
FCRX15MASK_H	$C	Receive Buffer 15 Mask High Register
FCRX15MASK_L	$D	Receive Buffer 15 Mask Low Register
		Reserved
FCSTATUS	$10	Error and Status Register
FCIMASK1	$11	Interrupt Masks 1 Register
FCIFLAG1	$12	Interrupt Flags 1 Register
FCR/T_ERROR_CNTRS	$13	Receive and Transmit Error Counters Register
		Reserved
		Reserved
		Reserved
FCMB0_CONTROL	$40	Message Buffer 0 Control / Status Register
FCMB0_ID_HIGH	$41	Message Buffer 0 ID High Register

Table 4-38 FlexCAN Registers Address Map (Continued)
(FC_BASE = $00 F800)
FlexCAN is NOT available in the 56F8146 device

Register Acronym	Address Offset	Register Description
FCMB0_ID_LOW	$42	Message Buffer 0 ID Low Register
FCMB0_DATA	$43	Message Buffer 0 Data Register
FCMB0_DATA	$44	Message Buffer 0 Data Register
FCMB0_DATA	$45	Message Buffer 0 Data Register
FCMB0_DATA	$46	Message Buffer 0 Data Register
		Reserved
FCMSB1_CONTROL	$48	Message Buffer 1 Control / Status Register
FCMSB1_ID_HIGH	$49	Message Buffer 1 ID High Register
FCMSB1_ID_LOW	$4A	Message Buffer 1 ID Low Register
FCMB1_DATA	$4B	Message Buffer 1 Data Register
FCMB1_DATA	$4C	Message Buffer 1 Data Register
FCMB1_DATA	$4D	Message Buffer 1 Data Register
FCMB1_DATA	$4E	Message Buffer 1 Data Register
		Reserved
FCMB2_CONTROL	$50	Message Buffer 2 Control / Status Register
FCMB2_ID_HIGH	$51	Message Buffer 2 ID High Register
FCMB2_ID_LOW	$52	Message Buffer 2 ID Low Register
FCMB2_DATA	$53	Message Buffer 2 Data Register
FCMB2_DATA	$54	Message Buffer 2 Data Register
FCMB2_DATA	$55	Message Buffer 2 Data Register
FCMB2_DATA	$56	Message Buffer 2 Data Register
		Reserved
FCMB3_CONTROL	$58	Message Buffer 3 Control / Status Register
FCMB3_ID_HIGH	$59	Message Buffer 3 ID High Register
FCMB3_ID_LOW	$5A	Message Buffer 3 ID Low Register
FCMB3_DATA	$5B	Message Buffer 3 Data Register
FCMB3_DATA	$5C	Message Buffer 3 Data Register
FCMB3_DATA	$5D	Message Buffer 3 Data Register
FCMB3_DATA	$5E	Message Buffer 3 Data Register
		Reserved
FCMB4_CONTROL	$60	Message Buffer 4 Control / Status Register

Table 4-38 FlexCAN Registers Address Map (Continued)
(FC_BASE = $00 F800)
FlexCAN is NOT available in the 56F8146 device

Register Acronym	Address Offset	Register Description
FCMB4_ID_HIGH	$61	Message Buffer 4 ID High Register
FCMB4_ID_LOW	$62	Message Buffer 4 ID Low Register
FCMB4_DATA	$63	Message Buffer 4 Data Register
FCMB4_DATA	$64	Message Buffer 4 Data Register
FCMB4_DATA	$65	Message Buffer 4 Data Register
FCMB4_DATA	$66	Message Buffer 4 Data Register
		Reserved
FCMB5_CONTROL	$68	Message Buffer 5 Control / Status Register
FCMB5_ID_HIGH	$69	Message Buffer 5 ID High Register
FCMB5_ID_LOW	$6A	Message Buffer 5 ID Low Register
FCMB5_DATA	$6B	Message Buffer 5 Data Register
FCMB5_DATA	$6C	Message Buffer 5 Data Register
FCMB5_DATA	$6D	Message Buffer 5 Data Register
FCMB5_DATA	$6E	Message Buffer 5 Data Register
		Reserved
FCMB6_CONTROL	$70	Message Buffer 6 Control / Status Register
FCMB6_ID_HIGH	$71	Message Buffer 6 ID High Register
FCMB6_ID_LOW	$72	Message Buffer 6 ID Low Register
FCMB6_DATA	$73	Message Buffer 6 Data Register
FCMB6_DATA	$74	Message Buffer 6 Data Register
FCMB6_DATA	$75	Message Buffer 6 Data Register
FCMB6_DATA	$76	Message Buffer 6 Data Register
		Reserved
FCMB7_CONTROL	$78	Message Buffer 7 Control / Status Register
FCMB7_ID_HIGH	$79	Message Buffer 7 ID High Register
FCMB7_ID_LOW	$7A	Message Buffer 7 ID Low Register
FCMB7_DATA	$7B	Message Buffer 7 Data Register
FCMB7_DATA	$7C	Message Buffer 7 Data Register
FCMB7_DATA	$7D	Message Buffer 7 Data Register
FCMB7_DATA	$7E	Message Buffer 7 Data Register
		Reserved

Table 4-38 FlexCAN Registers Address Map (Continued)
(FC_BASE = $00 F800)
FlexCAN is NOT available in the 56F8146 device

Register Acronym	Address Offset	Register Description
FCMB8_CONTROL	$80	Message Buffer 8 Control / Status Register
FCMB8_ID_HIGH	$81	Message Buffer 8 ID High Register
FCMB8_ID_LOW	$82	Message Buffer 8 ID Low Register
FCMB8_DATA	$83	Message Buffer 8 Data Register
FCMB8_DATA	$84	Message Buffer 8 Data Register
FCMB8_DATA	$85	Message Buffer 8 Data Register
FCMB8_DATA	$86	Message Buffer 8 Data Register
		Reserved
FCMB9_CONTROL	$88	Message Buffer 9 Control / Status Register
FCMB9_ID_HIGH	$89	Message Buffer 9 ID High Register
FCMB9_ID_LOW	$8A	Message Buffer 9 ID Low Register
FCMB9_DATA	$8B	Message Buffer 9 Data Register
FCMB9_DATA	$8C	Message Buffer 9 Data Register
FCMB9_DATA	$8D	Message Buffer 9 Data Register
FCMB9_DATA	$8E	Message Buffer 9 Data Register
		Reserved
FCMB10_CONTROL	$90	Message Buffer 10 Control / Status Register
FCMB10_ID_HIGH	$91	Message Buffer 10 ID High Register
FCMB10_ID_LOW	$92	Message Buffer 10 ID Low Register
FCMB10_DATA	$93	Message Buffer 10 Data Register
FCMB10_DATA	$94	Message Buffer 10 Data Register
FCMB10_DATA	$95	Message Buffer 10 Data Register
FCMB10_DATA	$96	Message Buffer 10 Data Register
		Reserved
FCMB11_CONTROL	$98	Message Buffer 11 Control / Status Register
FCMB11_ID_HIGH	$99	Message Buffer 11 ID High Register
FCMB11_ID_LOW	$9A	Message Buffer 11 ID Low Register

Table 4-38 FlexCAN Registers Address Map (Continued)
(FC_BASE = $00 F800)
FlexCAN is NOT available in the 56F8146 device

Register Acronym	Address Offset	Register Description
FCMB11_DATA	$9B	Message Buffer 11 Data Register
FCMB11_DATA	$9C	Message Buffer 11 Data Register
FCMB11_DATA	$9D	Message Buffer 11 Data Register
FCMB11_DATA	$9E	Message Buffer 11 Data Register
		Reserved
FCMB12_CONTROL	$A0	Message Buffer 12 Control / Status Register
FCMB12_ID_HIGH	$A1	Message Buffer 12 ID High Register
FCMB12_ID_LOW	$A2	Message Buffer 12 ID Low Register
FCMB12_DATA	$A3	Message Buffer 12 Data Register
FCMB12_DATA	$A4	Message Buffer 12 Data Register
FCMB12_DATA	$A5	Message Buffer 12 Data Register
FCMB12_DATA	$A6	Message Buffer 12 Data Register
		Reserved
FCMB13_CONTROL	$A8	Message Buffer 13 Control / Status Register
FCMB13_ID_HIGH	$A9	Message Buffer 13 ID High Register
FCMB13_ID_LOW	$AA	Message Buffer 13 ID Low Register
FCMB13_DATA	$AB	Message Buffer 13 Data Register
FCMB13_DATA	$AC	Message Buffer 13 Data Register
FCMB13_DATA	$AD	Message Buffer 13 Data Register
FCMB13_DATA	$AE	Message Buffer 13 Data Register
		Reserved
FCMB14_CONTROL	$B0	Message Buffer 14 Control / Status Register
FCMB14_ID_HIGH	$B1	Message Buffer 14 ID High Register
FCMB14_ID_LOW	$B2	Message Buffer 14 ID Low Register
FCMB14_DATA	$B3	Message Buffer 14 Data Register
FCMB14_DATA	$B4	Message Buffer 14 Data Register
FCMB14_DATA	$B5	Message Buffer 14 Data Register
FCMB14_DATA	$B6	Message Buffer 14 Data Register
		Reserved
FCMB15_CONTROL	$B8	Message Buffer 15 Control / Status Register
FCMB15_ID_HIGH	$B9	Message Buffer 15 ID High Register
FCMB15_ID_LOW	$BA	Message Buffer 15 ID Low Register

Table 4-38 FlexCAN Registers Address Map (Continued)
(FC_BASE = $00 F800)
FlexCAN is NOT available in the 56F8146 device

Register Acronym	Address Offset	Register Description
FCMB15_DATA	$BB	Message Buffer 15 Data Register
FCMB15_DATA	$BC	Message Buffer 15 Data Register
FCMB15_DATA	$BD	Message Buffer 15 Data Register
FCMB15_DATA	$BE	Message Buffer 15 Data Register
		Reserved

4.8 Factory Programmed Memory

The Boot Flash memory block is programmed during manufacturing with a default Serial Bootloader program. The Serial Bootloader application can be used to load a user application into the Program and *Data Flash* (*NOT available in the 56F8146 device*) memories of the device. The **56F83xx SCI/CAN Bootloader User Manual (MC56F83xxBLUM)** provides detailed information on this firmware. An application note, **Production Flash Programming (AN1973),** details how the Serial Bootloader program can be used to perform production Flash programming of the on-board Flash memories as well as other potential methods.

Like all the Flash memory blocks, the Boot Flash can be erased and programmed by the user. The Serial Bootloader application is programmed as an aid to the end user, but is not required to be used or maintained in the Boot Flash memory.

Part 5 Interrupt Controller (ITCN)

5.1 Introduction

The Interrupt Controller (ITCN) module is used to arbitrate between various interrupt requests (IRQs), to signal to the 56800E core when an interrupt of sufficient priority exists, and to what address to jump in order to service this interrupt.

5.2 Features

The ITCN module design includes these distinctive features:

- Programmable priority levels for each IRQ
- Two programmable Fast Interrupts
- Notification to SIM module to restart clocks out of Wait and Stop modes
- Drives initial address on the address bus after reset

For further information, see **Table 4-5**, Interrupt Vector Table Contents.

5.3 Functional Description

The Interrupt Controller is a slave on the IPBus. It contains registers allowing each of the 82 interrupt sources to be set to one of four priority levels, excluding certain interrupts of fixed priority. Next, all of the interrupt requests of a given level are priority encoded to determine the lowest numerical value of the active interrupt requests for that level. Within a given priority level, zero is the highest priority, while number 81 is the lowest.

5.3.1 Normal Interrupt Handling

Once the ITCN has determined that an interrupt is to be serviced and which interrupt has the highest priority, an interrupt vector address is generated. Normal interrupt handling concatenates the VBA and the vector number to determine the vector address. In this way, an offset is generated into the vector table for each interrupt.

5.3.2 Interrupt Nesting

Interrupt exceptions may be nested to allow an IRQ of higher priority than the current exception to be serviced. The following tables define the nesting requirements for each priority level.

Table 5-1 Interrupt Mask Bit Definition

SR[9][1]	SR[8][1]	Permitted Exceptions	Masked Exceptions
0	0	Priorities 0, 1, 2, 3	None
0	1	Priorities 1, 2, 3	Priority 0
1	0	Priorities 2, 3	Priorities 0, 1
1	1	Priority 3	Priorities 0, 1, 2

1. Core status register bits indicating current interrupt mask within the core.

Table 5-2 Interrupt Priority Encoding

IPIC_LEVEL[1:0][1]	Current Interrupt Priority Level	Required Nested Exception Priority
00	No Interrupt or SWILP	Priorities 0, 1, 2, 3
01	Priority 0	Priorities 1, 2, 3
10	Priority 1	Priorities 2, 3
11	Priorities 2 or 3	Priority 3

1. See IPIC field definition in Part 5.6.30.2.

5.3.3 Fast Interrupt Handling

Fast interrupts are described in the **DSP56800E Reference Manual**. The interrupt controller recognizes fast interrupts before the core does.

A fast interrupt is defined (to the ITCN) by:

1. Setting the priority of the interrupt as level 2, with the appropriate field in the IPR registers
2. Setting the FIMn register to the appropriate vector number
3. Setting the FIVALn and FIVAHn registers with the address of the code for the fast interrupt

When an interrupt occurs, its vector number is compared with the FIM0 and FIM1 register values. If a match occurs, and it is a level 2 interrupt, the ITCN handles it as a fast interrupt. The ITCN takes the vector address from the appropriate FIVALn and FIVAHn registers, instead of generating an address that is an offset from the VBA.

The core then fetches the instruction from the indicated vector adddress and if it is not a JSR, the core starts its fast interrupt handling.

5.4 Block Diagram

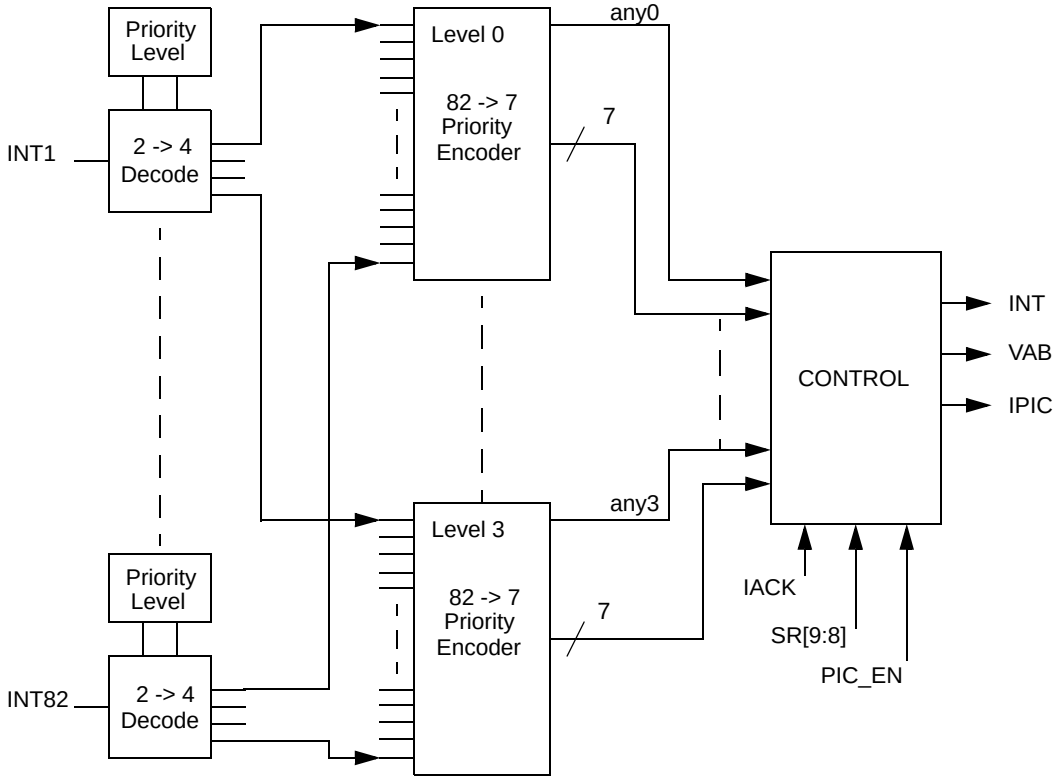

Figure 5-1 Interrupt Controller Block Diagram

5.5 Operating Modes

The ITCN module design contains two major modes of operation:

- **Functional Mode**
  The ITCN is in this mode by default.

- **Wait and Stop Modes**
  During Wait and Stop modes, the system clocks and the 56800E core are turned off. The ITCN will signal a pending IRQ to the System Integration Module (SIM) to restart the clocks and service the IRQ. An IRQ can only wake up the core if the IRQ is enabled prior to entering the Wait or Stop mode. Also, the $\overline{\text{IRQA}}$ and $\overline{\text{IRQB}}$ signals automatically become low-level sensitive in these modes even if the control register bits are set to make them falling-edge sensitive. This is because there is no clock available to detect the falling edge.

  A peripheral which requires a clock to generate interrupts will not be able to generate interrupts during Stop mode. The FlexCAN module can wake the device from Stop mode, and a reset will do just that, or $\overline{\text{IRQA}}$ and $\overline{\text{IRQB}}$ can wake it up.

5.6 Register Descriptions

A register address is the sum of a base address and an address offset. The base address is defined at the system level and the address offset is defined at the module level. The ITCN peripheral has 24 registers.

Table 5-3 ITCN Register Summary (ITCN_BASE = $00F1A0)

Register Acronym	Base Address +	Register Name	Section Location
IPR0	$0	Interrupt Priority Register 0	5.6.1
IPR1	$1	Interrupt Priority Register 1	5.6.2
IPR2	$2	Interrupt Priority Register 2	5.6.3
IPR3	$3	Interrupt Priority Register 3	5.6.4
IPR4	$4	Interrupt Priority Register 4	5.6.5
IPR5	$5	Interrupt Priority Register 5	5.6.6
IPR6	$6	Interrupt Priority Register 6	5.6.7
IPR7	$7	Interrupt Priority Register 7	5.6.8
IPR8	$8	Interrupt Priority Register 8	5.6.9
IPR9	$9	Interrupt Priority Register 9	5.6.10
VBA	$A	Vector Base Address Register	5.6.11
FIM0	$B	Fast Interrupt 0 Match Register	5.6.12
FIVAL0	$C	Fast Interrupt 0 Vector Address Low Register	5.6.13
FIVAH0	$D	Fast Interrupt 0 Vector Address High Register	5.6.14
FIM1	$E	Fast Interrupt 1 Match Register	5.6.15
FIVAL1	$F	Fast Interrupt 1 Vector Address Low Register	5.6.16
FIVAH1	$10	Fast Interrupt 1 Vector Address High Register	5.6.17
IRQP0	$11	IRQ Pending Register 0	5.6.18
IRQP1	$12	IRQ Pending Register 1	5.6.19

Table 5-3 ITCN Register Summary (ITCN_BASE = $00F1A0) (Continued)

Register Acronym	Base Address +	Register Name	Section Location
IRQP2	$13	IRQ Pending Register 2	5.6.20
IRQP3	$14	IRQ Pending Register 3	5.6.21
IRQP4	$15	IRQ Pending Register 4	5.6.22
IRQP5	$16	IRQ Pending Register 5	5.6.23
Reserved	$17		
ICTL		Interrupt Control Register	5.6.30

Add. Offset	Register Name		15	14	13	12	11	10	9	8	7	6	5	4	3	2	1	0
$0	IPR0	R	0	0	BKPT_U0 IPL		STPCNT IPL		0	0	0	0	0	0	0	0	0	0
		W																
$1	IPR1	R	0	0	0	0	0	0	0	0	0	0	RX_REG IPL		TX_REG IPL		TRBUF IPL	
		W																
$2	IPR2	R	FMCBE IPL		FMCC IPL		FMERR IPL		LOCK IPL		LVI IPL		0	0	IRQB IPL		IRQA IPL	
		W																
$3	IPR3	R	GPIOD IPL		GPIOE IPL		GPIOF IPL		FCMSGBUF IPL		FCWKUP IPL		FCERR IPL		FCBOFF IPL		0	0
		W																
$4	IPR4	R	SPI0_RCV IPL		SPI1_XMIT IPL		SPI1_RCV IPL		0	0	0	0	GPIOA IPL		GPIOB IPL		GPIOC IPL	
		W																
$5	IPR5	R	DEC1_XIRQ IPL		DEC1_HIRQ IPL		SCI1_RCV IPL		SCI1_RERR IPL		0	0	SCI1_TIDL IPL		SCI1_XMIT IPL		SPI0_XMIT IPL	
		W																
$6	IPR6	R	TMRC0 IPL		TMRD3 IPL		TMRD2 IPL		TMRD1 IPL		TMRD0 IPL		0	0	DEC0_XIRQ IPL		DEC0_HIRQ IPL	
		W																
$7	IPR7	R	TMRA0 IPL		TMRB3 IPL		TMRB2 IPL		TMRB1 IPL		TMRB0 IPL		TMRC3 IPL		TMRC2 IPL		TMRC1 IPL	
		W																
$8	IPR8	R	SCI0_RCV IPL		SCI0_RERR IPL		0	0	SCI0_TIDL IPL		SCI0_XMIT IPL		TMRA3 IPL		TMRA2 IPL		TMRA1 IPL	
		W					0	0										
$9	IPR9	R	PWMA F IPL		PWMB F IPL		PWMA_RL IPL		PWMB_RL IPL		ADCA_ZC IPL		ABCB_ZC IPL		ADCA_CC IPL		ADCB_CC IPL	
		W																
$A	VBA	R	0	0	0	VECTOR BASE ADDRESS												
		W																
$B	VBA0	R	0	0	0	0	0	0	0	0	0	FAST INTERRUPT 0						
		W																
$C	FIVAL0	R	FAST INTERRUPT 0 VECTOR ADDRESS LOW															
		W																
$D	FIVAH0	R	0	0	0	0	0	0	0	0	0	0	0	FAST INTERRUPT 0 VECTOR ADDRESS HIGH				
		W																
$E	FIM1	R	0	0	0	0	0	0	0	0	0	FAST INTERRUPT 1						
		W	0	0	0	0	0	0	0	0	0							
$F	FIVAL1	R	FAST INTERRUPT 1 VECTOR ADDRESS LOW															
		W																
$10	FIVAH1	R	0	0	0	0	0	0	0	0	0	0	0	FAST INTERRUPT 1 VECTOR ADDRESS HIGH				
		W	0	0	0	0	0	0	0	0	0	0	0					

Figure 5-2 ITCN Register Map Summary

Add. Offset	Register Name		15	14	13	12	11	10	9	8	7	6	5	4	3	2	1	0
$11	IRQP0	R	PENDING [16:2]															1
		W																
$12	IRQP1	R	PENDING [32:17]															
		W																
$13	IRQP2	R	PENDING [48:33]															
		W																
$14	IRQP3	R	PENDING [64:49]															
		W																
$15	IRQP4	R	PENDING [80:65]															
		W																
$16	IRQP5	R	1	1	1	1	1	1	1	1	1	1	1	1	1	1	1	PEND-ING [81]
		W																
	Reserved																	
$1D	ICTL	R	INT	IPIC		VAB							INT_DIS	1	$\overline{\text{IRQB}}$ STATE	$\overline{\text{IRQA}}$ STATE	$\overline{\text{IRQB}}$ EDG	$\overline{\text{IRQA}}$ EDG
		W																

= Reserved

Figure 5-2 ITCN Register Map Summary

5.6.1 Interrupt Priority Register 0 (IPR0)

Base + $0	15	14	13	12	11	10	9	8	7	6	5	4	3	2	1	0
Read	0	0	BKPT_U0 IPL		STPCNT IPL		0	0	0	0	0	0	0	0	0	0
Write																
RESET	0	0	0	0	0	0	0	0	0	0	0	0	0	0	0	0

Figure 5-3 Interrupt Priority Register 0 (IPR0)

5.6.1.1 Reserved—Bits 15–14

This bit field is reserved or not implemented. It is read as 0 and cannot be modified by writing.

5.6.1.2 EOnCE Breakpoint Unit 0 Interrupt Priority Level (BKPT_U0 IPL)—Bits13–12

This field is used to set the interrupt priority levels for IRQs. This IRQ is limited to priorities 1 through 3. It is disabled by default.

- 00 = IRQ disabled (default)
- 01 = IRQ is priority level 1
- 10 = IRQ is priority level 2
- 11 = IRQ is priority level 3

5.6.1.3 EOnCE Step Counter Interrupt Priority Level (STPCNT IPL)—Bits 11–10

This field is used to set the interrupt priority level for IRQs. This IRQ is limited to priorities 1 through 3.

It is disabled by default.

- 00 = IRQ disabled (default)
- 01 = IRQ is priority level 1
- 10 = IRQ is priority level 2
- 11 = IRQ is priority level 3

5.6.1.4 Reserved—Bits 9–0

This bit field is reserved or not implemented. It is read as 0 and cannot be modified by writing.

5.6.2 Interrupt Priority Register 1 (IPR1)

Base + $1	15	14	13	12	11	10	9	8	7	6	5	4	3	2	1	0
Read	0	0	0	0	0	0	0	0	0	0	RX_REG IPL		TX_REG IPL		TRBUF IPL	
Write																
RESET	0	0	0	0	0	0	0	0	0	0	0	0	0	0	0	0

Figure 5-4 Interrupt Priority Register 1 (IPR1)

5.6.2.1 Reserved—Bits 15–6

This bit field is reserved or not implemented. It is read as 0 and cannot be modified by writing.

5.6.2.2 EOnCE Receive Register Full Interrupt Priority Level (RX_REG IPL)—Bits 5–4

This field is used to set the interrupt priority level for IRQs. This IRQ is limited to priorities 1 through 3. It is disabled by default.

- 00 = IRQ disabled (default)
- 01 = IRQ is priority level 1
- 10 = IRQ is priority level 2
- 11 = IRQ is priority level 3

5.6.2.3 EOnCE Transmit Register Empty Interrupt Priority Level (TX_REG IPL)—Bits 3–2

This field is used to set the interrupt priority level for IRQs. This IRQ is limited to priorities 1 through 3. It is disabled by default.

- 00 = IRQ disabled (default)
- 01 = IRQ is priority level 1

- 10 = IRQ is priority level 2
- 11 = IRQ is priority level 3

5.6.2.4 EOnCE Trace Buffer Interrupt Priority Level (TRBUF IPL)—Bits 1–0

This field is used to set the interrupt priority level for IRQs. This IRQ is limited to priorities 1 through 3. It is disabled by default.

- 00 = IRQ disabled (default)
- 01 = IRQ is priority level 1
- 10 = IRQ is priority level 2
- 11 = IRQ is priority level 3

5.6.3 Interrupt Priority Register 2 (IPR2)

Base + $2	15	14	13	12	11	10	9	8	7	6	5	4	3	2	1	0
Read	FMCBE IPL		FMCC IPL		FMERR IPL		LOCK IPL		LVI IPL		0	0	IRQB IPL		IRQA IPL	
Write																
RESET	0	0	0	0	0	0	0	0	0	0	0	0	0	0	0	0

Figure 5-5 Interrupt Priority Register 2 (IPR2)

5.6.3.1 Flash Memory Command, Data, Address Buffers Empty Interrupt Priority Level (FMCBE IPL)—Bits 15–14

This field is used to set the interrupt priority level for IRQs. This IRQ is limited to priorities 0 through 2. It is disabled by default.

- 00 = IRQ disabled (default)
- 01 = IRQ is priority level 0
- 10 = IRQ is priority level 1
- 11 = IRQ is priority level 2

5.6.3.2 Flash Memory Command Complete Priority Level (FMCC IPL)—Bits 13–12

This field is used to set the interrupt priority level for IRQs. This IRQ is limited to priorities 0 through 2. It is disabled by default.

- 00 = IRQ disabled (default)

- 01 = IRQ is priority level 0
- 10 = IRQ is priority level 1
- 11 = IRQ is priority level 2

5.6.3.3 Flash Memory Error Interrupt Priority Level (FMERR IPL)—Bits 11–10

This field is used to set the interrupt priority level for IRQs. This IRQ is limited to priorities 0 through 2. It is disabled by default.

- 00 = IRQ disabled (default)
- 01 = IRQ is priority level 0
- 10 = IRQ is priority level 1
- 11 = IRQ is priority level 2

5.6.3.4 PLL Loss of Lock Interrupt Priority Level (LOCK IPL)—Bits 9–8

This field is used to set the interrupt priority level for IRQs. This IRQ is limited to priorities 0 through 2. It is disabled by default.

- 00 = IRQ disabled (default)
- 01 = IRQ is priority level 0
- 10 = IRQ is priority level 1
- 11 = IRQ is priority level 2

5.6.3.5 Low Voltage Detector Interrupt Priority Level (LVI IPL)—Bits 7–6

This field is used to set the interrupt priority level for IRQs. This IRQ is limited to priorities 0 through 2. It is disabled by default.

- 00 = IRQ disabled (default)
- 01 = IRQ is priority level 0
- 10 = IRQ is priority level 1
- 11 = IRQ is priority level 2

5.6.3.6 Reserved—Bits 5–4

This bit field is reserved or not implemented. It is read as 0 and cannot be modified by writing.

5.6.3.7 External IRQ B Interrupt Priority Level (IRQB IPL)—Bits 3–2

This field is used to set the interrupt priority level for IRQs. This IRQ is limited to priorities 0 through 2. It is disabled by default.

- 00 = IRQ disabled (default)

- 01 = IRQ is priority level 0
- 10 = IRQ is priority level 1
- 11 = IRQ is priority level 2

5.6.3.8 External IRQ A Interrupt Priority Level (IRQA IPL)—Bits 1–0

This field is used to set the interrupt priority level for IRQs. This IRQ is limited to priorities 0 through 2. It is disabled by default.

- 00 = IRQ disabled (default)
- 01 = IRQ is priority level 0
- 10 = IRQ is priority level 1
- 11 = IRQ is priority level 2

5.6.4 Interrupt Priority Register 3 (IPR3)

Base + $3	15	14	13	12	11	10	9	8	7	6	5	4	3	2	1	0
Read	GPIODIPL		GPIOE IPL		GPIOFIPL		FCMSGBUF IPL		FCWKUP IPL		FCERR IPL		FCBOFF IPL		0	0
Write																
RESET	0	0	0	0	0	0	0	0	0	0	0	0	0	0	0	0

Figure 5-6 Interrupt Priority Register 3 (IPR3)

5.6.4.1 GPIOD Interrupt Priority Level (GPIOD IPL)—Bits 15–14

This field is used to set the interrupt priority level for IRQs. This IRQ is limited to priorities 0 through 2. They are disabled by default.

- 00 = IRQ disabled (default)
- 01 = IRQ is priority level 0
- 10 = IRQ is priority level 1
- 11 = IRQ is priority level 2

5.6.4.2 GPIOE Interrupt Priority Level (GPIOE IPL)—Bits 13–12

This field is used to set the interrupt priority level for IRQs. This IRQ is limited to priorities 0 through 2. They are disabled by default.

- 00 = IRQ disabled (default)
- 01 = IRQ is priority level 0
- 10 = IRQ is priority level 1
- 11 = IRQ is priority level 2

5.6.4.3 GPIOF Interrupt Priority Level (GPIOF IPL)—Bits 11–10

This field is used to set the interrupt priority level for IRQs. This IRQ is limited to priorities 0 through 2two. They are disabled by default.

- 00 = IRQ disabled (default)
- 01 = IRQ is priority level 0
- 10 = IRQ is priority level 1
- 11 = IRQ is priority level 2

5.6.4.4 FlexCAN Message Buffer Interrupt Priority Level (FCMSGBUF IPL)—Bits 9–8

This field is used to set the interrupt priority level for IRQs. This IRQ is limited to priorities 0 through 2. They are disabled by default.

- 00 = IRQ disabled (default)
- 01 = IRQ is priority level 0
- 10 = IRQ is priority level 1
- 11 = IRQ is priority level 2

5.6.4.5 FlexCAN Wake Up Interrupt Priority Level (FCWKUP IPL)—Bits 7–6

This field is used to set the interrupt priority level for IRQs. This IRQ is limited to priorities 0 through 2. They are disabled by default.

- 00 = IRQ disabled (default)
- 01 = IRQ is priority level 0
- 10 = IRQ is priority level 1
- 11 = IRQ is priority level 2

5.6.4.6 FlexCAN Error Interrupt Priority Level (FCERR IPL)—Bits 5–4

This field is used to set the interrupt priority level for IRQs. This IRQ is limited to priorities 0 through 2. They are disabled by default.

- 00 = IRQ disabled (default)
- 01 = IRQ is priority level 0
- 10 = IRQ is priority level 1
- 11 = IRQ is priority level 2

5.6.4.7 FlexCAN Bus Off Interrupt Priority Level (FCBOFF IPL)—Bits 3–2

This field is used to set the interrupt priority level for IRQs. This IRQ is limited to priorities 0 through 2. They are disabled by default.

- 00 = IRQ disabled (default)

- 01 = IRQ is priority level 0
- 10 = IRQ is priority level 1
- 11 = IRQ is priority level 2

5.6.4.8 Reserved—Bits 1–0

This bit field is reserved or not implemented. It is read as 0 and cannot be modified by writing.

5.6.5 Interrupt Priority Register 4 (IPR4)

Base + $4	15	14	13	12	11	10	9	8	7	6	5	4	3	2	1	0
Read	SPI0_RCV IPL		SPI1_XMIT IPL		SPI1_RCV IPL		0	0	0	0	GPIOA IPL		GPIOB IPL		GPIOC IPL	
Write																
RESET	0	0	0	0	0	0	0	0	0	0	0	0	0	0	0	0

Figure 5-7 Interrupt Priority Register 4 (IPR4)

5.6.5.1 SPI0 Receiver Full Interrupt Priority Level (SPI0_RCV IPL)—Bits 15–14

This field is used to set the interrupt priority level for IRQs. This IRQ is limited to priorities 0 through 2. They are disabled by default.

- 00 = IRQ disabled (default)
- 01 = IRQ is priority level 0
- 10 = IRQ is priority level 1
- 11 = IRQ is priority level 2

5.6.5.2 SPI1 Transmit Empty Interrupt Priority Level (SPI1_XMIT IPL)—Bits 13–12

This field is used to set the interrupt priority level for IRQs. This IRQ is limited to priorities 0 through 2. They are disabled by default.

- 00 = IRQ disabled (default)
- 01 = IRQ is priority level 0
- 10 = IRQ is priority level 1
- 11 = IRQ is priority level 2

5.6.5.3 SPI1 Receiver Full Interrupt Priority Level (SPI1_RCV IPL)—Bits 11–10

This field is used to set the interrupt priority level for IRQs. This IRQ is limited to priorities 0 through 2. They are disabled by default.

- 00 = IRQ disabled (default)
- 01 = IRQ is priority level 0
- 10 = IRQ is priority level 1
- 11 = IRQ is priority level 2

5.6.5.4 Reserved—Bits 9–6

This bit field is reserved or not implemented. It is read as 0 and cannot be modified by writing.

5.6.5.5 GPIOA Interrupt Priority Level (GPIOA IPL)—Bits 5–4

This field is used to set the interrupt priority level for IRQs. This IRQ is limited to priorities 0 through 2. They are disabled by default.

- 00 = IRQ disabled (default)
- 01 = IRQ is priority level 0
- 10 = IRQ is priority level 1
- 11 = IRQ is priority level 2

5.6.5.6 GPIOB Interrupt Priority Level (GPIOB IPL)—Bits 3–2

This field is used to set the interrupt priority level for IRQs. This IRQ is limited to priorities 0 through 2. They are disabled by default.

- 00 = IRQ disabled (default)
- 01 = IRQ is priority level 0
- 10 = IRQ is priority level 1
- 11 = IRQ is priority level 2

5.6.5.7 GPIOC Interrupt Priority Level (GPIOC IPL)—Bits 1–0

This field is used to set the interrupt priority level for IRQs. This IRQ is limited to priorities 0 through 2. They are disabled by default.

- 00 = IRQ disabled (default)
- 01 = IRQ is priority level 0
- 10 = IRQ is priority level 1
- 11 = IRQ is priority level 2

5.6.6 Interrupt Priority Register 5 (IPR5)

Base + $5	15	14	13	12	11	10	9	8	7	6	5	4	3	2	1	0
Read	DEC1_XIRQ IPL		DEC1_HIRQ IPL		SCI1_RCV IPL		SCI1_RERR IPL		0	0	SCI1_TIDL IPL		SCI1_XMIT IPL		SPI0_XMIT IPL	
Write																
RESET	0	0	0	0	0	0	0	0	0	0	0	0	0	0	0	0

Figure 5-8 Interrupt Priority Register 5 (IPR5)

5.6.6.1 Quadrature Decoder 1 INDEX Pulse Interrupt Priority Level (DEC1_XIRQ IPL)—Bits 15–14

This field is used to set the interrupt priority level for IRQs. This IRQ is limited to priorities 0 through 2. They are disabled by default.

- 00 = IRQ disabled (default)
- 01 = IRQ is priority level 0
- 10 = IRQ is priority level 1
- 11 = IRQ is priority level 2

5.6.6.2 Quadrature Decoder 1 HOME Signal Transition or Watchdog Timer Interrupt Priority Level (DEC1_HIRQ IPL)—Bits 13–12

This field is used to set the interrupt priority level for IRQs. This IRQ is limited to priorities 0 through 2. They are disabled by default.

- 00 = IRQ disabled (default)
- 01 = IRQ is priority level 0
- 10 = IRQ is priority level 1
- 11 = IRQ is priority level 2

5.6.6.3 SCI 1 Receiver Full Interrupt Priority Level (SCI1_RCV IPL)—Bits 11–10

This field is used to set the interrupt priority level for IRQs. This IRQ is limited to priorities 0 through 2. They are disabled by default.

- 00 = IRQ disabled (default)
- 01 = IRQ is priority level 0
- 10 = IRQ is priority level 1
- 11 = IRQ is priority level 2

5.6.6.4 SCI 1 Receiver Error Interrupt Priority Level (SCI1_RERR IPL)—Bits 9–8

This field is used to set the interrupt priority level for IRQs. This IRQ is limited to priorities 0 through 2. They are disabled by default.

- 00 = IRQ disabled (default)
- 01 = IRQ is priority level 0
- 10 = IRQ is priority level 1
- 11 = IRQ is priority level 2

5.6.6.5 Reserved—Bits 7–6

This bit field is reserved or not implemented. It is read as 0 and cannot be modified by writing.

5.6.6.6 SCI 1 Transmitter Idle Interrupt Priority Level (SCI1_TIDL IPL)—Bits 5–4

This field is used to set the interrupt priority level for IRQs. This IRQ is limited to priorities 0 through 2. They are disabled by default.

- 00 = IRQ disabled (default)
- 01 = IRQ is priority level 0
- 10 = IRQ is priority level 1
- 11 = IRQ is priority level 2

5.6.6.7 SCI 1 Transmitter Empty Interrupt Priority Level (SCI1_XMIT IPL)—Bits 3–2

This field is used to set the interrupt priority level for IRQs. This IRQ is limited to priorities 0 through 2. They are disabled by default.

- 00 = IRQ disabled (default)
- 01 = IRQ is priority level 0
- 10 = IRQ is priority level 1
- 11 = IRQ is priority level 2

5.6.6.8 SPI 0 Transmitter Empty Interrupt Priority Level (SPI0_XMIT IPL)—Bits 1–0

This field is used to set the interrupt priority level for IRQs. This IRQ is limited to priorities 0 through 2. They are disabled by default.

- 00 = IRQ disabled (default)
- 01 = IRQ is priority level 0
- 10 = IRQ is priority level 1
- 11 = IRQ is priority level 2

5.6.7 Interrupt Priority Register 6 (IPR6)

Base + $6	15	14	13	12	11	10	9	8	7	6	5	4	3	2	1	0
Read	TMRC0 IPL		TMRD3 IPL		TMRD2 IPL		TMRD1 IPL		TMRD0 IPL		0	0	DEC0_XIRQ IPL		DEC0_HIRQ IPL	
Write																
RESET	0	0	0	0	0	0	0	0	0	0	0	0	0	0	0	0

Figure 5-9 Interrupt Priority Register 6 (IPR6)

5.6.7.1 Timer C, Channel 0 Interrupt Priority Level (TMRC0 IPL)—Bits 15–14

This field is used to set the interrupt priority level for IRQs. This IRQ is limited to priorities 0 through 2. They are disabled by default.

- 00 = IRQ disabled (default)
- 01 = IRQ is priority level 0
- 10 = IRQ is priority level 1
- 11 = IRQ is priority level 2

5.6.7.2 Timer D, Channel 3 Interrupt Priority Level (TMRD3 IPL)—Bits 13–12

This field is used to set the interrupt priority level for IRQs. This IRQ is limited to priorities 0 through 2. They are disabled by default.

- 00 = IRQ disabled (default)
- 01 = IRQ is priority level 0
- 10 = IRQ is priority level 1
- 11 = IRQ is priority level 2

5.6.7.3 Timer D, Channel 2 Interrupt Priority Level (TMRD2 IPL)—Bits 11–10

This field is used to set the interrupt priority level for IRQs. This IRQ is limited to priorities 0 through 2. They are disabled by default.

- 00 = IRQ disabled (default)
- 01 = IRQ is priority level 0
- 10 = IRQ is priority level 1

- 11 = IRQ is priority level 2

5.6.7.4 Timer D, Channel 1 Interrupt Priority Level (TMRD1 IPL)—Bits 9–8

This field is used to set the interrupt priority level for IRQs. This IRQ is limited to priorities 0 through 2. They are disabled by default.

- 00 = IRQ disabled (default)
- 01 = IRQ is priority level 0
- 10 = IRQ is priority level 1
- 11 = IRQ is priority level 2

5.6.7.5 Timer D, Channel 0 Interrupt Priority Level (TMRD0 IPL)—Bits 7–6

This field is used to set the interrupt priority level for IRQs. This IRQ is limited to priorities 0 through 2. They are disabled by default.

- 00 = IRQ disabled (default)
- 01 = IRQ is priority level 0
- 10 = IRQ is priority level 1
- 11 = IRQ is priority level 2

5.6.7.6 Reserved—Bits 5–4

This bit field is reserved or not implemented. It is read as 0 and cannot be modified by writing.

5.6.7.7 Quadrature Decoder 0, INDEX Pulse Interrupt Priority Level (DEC0_XIRQ IPL)—Bits 3–2

This field is used to set the interrupt priority level for IRQs. This IRQ is limited to priorities 0 through 2. They are disabled by default.

- 00 = IRQ disabled (default)
- 01 = IRQ is priority level 0
- 10 = IRQ is priority level 1
- 11 = IRQ is priority level 2

5.6.7.8 Quadrature Decoder 0, HOME Signal Transition or Watchdog Timer Interrupt Priority Level (DEC0_HIRQ IPL)—Bits 1–0

This field is used to set the interrupt priority level for IRQs. This IRQ is limited to priorities 0 through 2. They are disabled by default.

- 00 = IRQ disabled (default)
- 01 = IRQ is priority level 0
- 10 = IRQ is priority level 1
- 11 = IRQ is priority level 2

5.6.8 Interrupt Priority Register 7 (IPR7)

Base + $7	15	14	13	12	11	10	9	8	7	6	5	4	3	2	1	0
Read	TMRA0 IPL		TMRB3 IPL		TMRB2 IPL		TMRB1 IPL		TMRB0 IPL		TMRC3 IPL		TMRC2 IPL		TMRC1 IPL	
Write																
RESET	0	0	0	0	0	0	0	0	0	0	0	0	0	0	0	0

Figure 5-10 Interrupt Priority Register (IPR7)

5.6.8.1 Timer A, Channel 0 Interrupt Priority Level (TMRA0 IPL)—Bits 15–14

This field is used to set the interrupt priority level for IRQs. This IRQ is limited to priorities 0 through 2. They are disabled by default.

- 00 = IRQ disabled (default)
- 01 = IRQ is priority level 0
- 10 = IRQ is priority level 1
- 11 = IRQ is priority level 2

5.6.8.2 Timer B, Channel 3 Interrupt Priority Level (TMRB3 IPL)—Bits 13–12

This field is used to set the interrupt priority level for IRQs. This IRQ is limited to priorities 0 through 2. They are disabled by default.

- 00 = IRQ disabled (default)
- 01 = IRQ is priority level 0
- 10 = IRQ is priority level 1
- 11 = IRQ is priority level 2

5.6.8.3 Timer B, Channel 2 Interrupt Priority Level (TMRB2 IPL)—Bits 11–10

This field is used to set the interrupt priority level for IRQs. This IRQ is limited to priorities 0 through 2. They are disabled by default.

- 00 = IRQ disabled (default)
- 01 = IRQ is priority level 0
- 10 = IRQ is priority level 1
- 11 = IRQ is priority level 2

5.6.8.4 Timer B, Channel 1 Interrupt Priority Level (TMRB1 IPL)—Bits 9–8

This field is used to set the interrupt priority level for IRQs. This IRQ is limited to priorities 0 through 2. They are disabled by default.

- 00 = IRQ disabled (default)
- 01 = IRQ is priority level 0
- 10 = IRQ is priority level 1
- 11 = IRQ is priority level 2

5.6.8.5 Timer B, Channel 0 Interrupt Priority Level (TMRB0 IPL)—Bits 7–6

This field is used to set the interrupt priority level for IRQs. This IRQ is limited to priorities 0 through 2. They are disabled by default.

- 00 = IRQ disabled (default)
- 01 = IRQ is priority level 0
- 10 = IRQ is priority level 1
- 11 = IRQ is priority level 2

5.6.8.6 Timer C, Channel 3 Interrupt Priority Level (TMRC3 IPL)—Bits 5–4

This field is used to set the interrupt priority level for IRQs. This IRQ is limited to priorities 0 through 2. They are disabled by default.

- 00 = IRQ disabled (default)
- 01 = IRQ is priority level 0
- 10 = IRQ is priority level 1
- 11 = IRQ is priority level 2

5.6.8.7 Timer C, Channel 2 Interrupt Priority Level (TMRC2 IPL)—Bits 3–2

This field is used to set the interrupt priority level for IRQs. This IRQ is limited to priorities 0 through 2. They are disabled by default.

- 00 = IRQ disabled (default)
- 01 = IRQ is priority level 0
- 10 = IRQ is priority level 1
- 11 = IRQ is priority level 2

5.6.8.8 Timer C, Channel 1 Interrupt Priority Level (TMRC1 IPL)—Bits 1–0

This field is used to set the interrupt priority level for IRQs. This IRQ is limited to priorities 0 through 2. They are disabled by default.

- 00 = IRQ disabled (default)
- 01 = IRQ is priority level 0
- 10 = IRQ is priority level 1
- 11 = IRQ is priority level 2

5.6.9 Interrupt Priority Register 8 (IPR8)

Base + $8	15	14	13	12	11	10	9	8	7	6	5	4	3	2	1	0
Read	SCI0_RCV IPL		SCI0_RERR IPL		0	0	SCI0_TIDL IPL		SCI0_XMIT IPL		TMRA3 IPL		TMRA2 IPL		TMRA1 IPL	
Write																
RESET	0	0	0	0	0	0	0	0	0	0	0	0	0	0	0	0

Figure 5-11 Interrupt Priority Register 8 (IPR8)

5.6.9.1 SCI0 Receiver Full Interrupt Priority Level (SCI0_RCV IPL)—Bits 15–14

This field is used to set the interrupt priority level for IRQs. This IRQ is limited to priorities 0 through 2. They are disabled by default.

- 00 = IRQ disabled (default)
- 01 = IRQ is priority level 0
- 10 = IRQ is priority level 1
- 11 = IRQ is priority level 2

5.6.9.2 SCI0 Receiver Error Interrupt Priority Level (SCI0_RERR IPL)—Bits 13–12

This field is used to set the interrupt priority level for IRQs. This IRQ is limited to priorities 0 through 2. They are disabled by default.

- 00 = IRQ disabled (default)
- 01 = IRQ is priority level 0
- 10 = IRQ is priority level 1
- 11 = IRQ is priority level 2

5.6.9.3 Reserved—Bits 11–10

This bit field is reserved or not implemented. It is read as 0 and cannot be modified by writing.

5.6.9.4 SCI0 Transmitter Idle Interrupt Priority Level (SCI0_TIDL IPL)—Bits 9–8

This field is used to set the interrupt priority level for IRQs. This IRQ is limited to priorities 0 through 2. They are disabled by default.

- 00 = IRQ disabled (default)
- 01 = IRQ is priority level 0
- 10 = IRQ is priority level 1
- 11 = IRQ is priority level 2

5.6.9.5 SCI0 Transmitter Empty Interrupt Priority Level (SCI0_XMIT IPL)—Bits 7–6

This field is used to set the interrupt priority level for IRQs. This IRQ is limited to priorities 0 through 2. They are disabled by default.

- 00 = IRQ disabled (default)
- 01 = IRQ is priority level 0
- 10 = IRQ is priority level 1
- 11 = IRQ is priority level 2

5.6.9.6 Timer A, Channel 3 Interrupt Priority Level (TMRA3 IPL)—Bits 5–4

This field is used to set the interrupt priority level for IRQs. This IRQ is limited to priorities 0 through 2. They are disabled by default.

- 00 = IRQ disabled (default)
- 01 = IRQ is priority level 0
- 10 = IRQ is priority level 1
- 11 = IRQ is priority level 2

5.6.9.7 Timer A, Channel 2 Interrupt Priority Level (TMRA2 IPL)—Bits 3–2

This field is used to set the interrupt priority level for IRQs. This IRQ is limited to priorities 0 through 2. They are disabled by default.

- 00 = IRQ disabled (default)
- 01 = IRQ is priority level 0
- 10 = IRQ is priority level 1
- 11 = IRQ is priority level 2

5.6.9.8 Timer A, Channel 1 Interrupt Priority Level (TMRA1 IPL)—Bits 1–0

This field is used to set the interrupt priority level for IRQs. This IRQ is limited to priorities 0 through 2. They are disabled by default.

- 00 = IRQ disabled (default)
- 01 = IRQ is priority level 0
- 10 = IRQ is priority level 1
- 11 = IRQ is priority level 2

5.6.10 Interrupt Priority Register 9 (IPR9)

Base + $9	15	14	13	12	11	10	9	8	7	6	5	4	3	2	1	0
Read Write	PWMA_F IPL		PWMB_F IPL		PWMA_RL IPL		PWM_RL IPL		ADCA_ZC IPL		ABCB_ZC IPL		ADCA_CC IPL		ADCB_CC IPL	
RESET	0	0	0	0	0	0	0	0	0	0	0	0	0	0	0	0

Figure 5-12 Interrupt Priority Register 9 (IPR9)

5.6.10.1 PWM A Fault Interrupt Priority Level (PWMA_F IPL)—Bits 15–14

This field is used to set the interrupt priority level for IRQs. This IRQ is limited to priorities 0 through 2. They are disabled by default.

- 00 = IRQ disabled (default)
- 01 = IRQ is priority level 0
- 10 = IRQ is priority level 1
- 11 = IRQ is priority level 2

5.6.10.2 PWM B Fault Interrupt Priority Level (PWMB_F IPL)—Bits 13–12

This field is used to set the interrupt priority level for IRQs. This IRQ is limited to priorities 0 through 2. They are disabled by default.

- 00 = IRQ disabled (default)
- 01 = IRQ is priority level 0
- 10 = IRQ is priority level 1
- 11 = IRQ is priority level 2

5.6.10.3 Reload PWM A Interrupt Priority Level (PWMA_RL IPL)—Bits 11–10

This field is used to set the interrupt priority level for IRQs. This IRQ is limited to priorities 0 through 2. They are disabled by default.

- 00 = IRQ disabled (default)
- 01 = IRQ is priority level 0
- 10 = IRQ is priority level 1
- 11 = IRQ is priority level 2

5.6.10.4 Reload PWM B Interrupt Priority Level (PWMB_RL IPL)—Bits 9–8

This field is used to set the interrupt priority level for IRQs. This IRQ is limited to priorities 0 through 2. They are disabled by default.

- 00 = IRQ disabled (default)
- 01 = IRQ is priority level 0
- 10 = IRQ is priority level 1
- 11 = IRQ is priority level 2

5.6.10.5 ADC A Zero Crossing or Limit Error Interrupt Priority Level (ADCA_ZC IPL)—Bits 7–6

This field is used to set the interrupt priority level for IRQs. This IRQ is limited to priorities 0 through 2. They are disabled by default.

- 00 = IRQ disabled (default)
- 01 = IRQ is priority level 0
- 10 = IRQ is priority level 1
- 11 = IRQ is priority level 2

5.6.10.6 ADC B Zero Crossing or Limit Error Interrupt Priority Level (ADCB_ZC IPL)—Bits 5–4

This field is used to set the interrupt priority level for IRQs. This IRQ is limited to priorities 0 through 2. They are disabled by default.

- 00 = IRQ disabled (default)
- 01 = IRQ is priority level 0
- 10 = IRQ is priority level 1
- 11 = IRQ is priority level 2

5.6.10.7 ADC A Conversion Complete Interrupt Priority Level (ADCA_CC IPL)—Bits 3–2

This field is used to set the interrupt priority level for IRQs. This IRQ is limited to priorities 0 through 2. They are disabled by default.

- 00 = IRQ disabled (default)
- 01 = IRQ is priority level 0
- 10 = IRQ is priority level 1
- 11 = IRQ is priority level 2

5.6.10.8 ADC B Conversion Complete Interrupt Priority Level (ADCB_CC IPL)—Bits 1–0

This field is used to set the interrupt priority level for IRQs. This IRQ is limited to priorities 0 through 2. They are disabled by default.

- 00 = IRQ disabled (default)
- 01 = IRQ is priority level 0
- 10 = IRQ is priority level 1
- 11 = IRQ is priority level 2

5.6.11 Vector Base Address Register (VBA)

Base + $A	15	14	13	12	11	10	9	8	7	6	5	4	3	2	1	0
Read	0	0	0	VECTOR BASE ADDRESS												
Write																
RESET	0	0	0	0	0	0	0	0	0	0	0	0	0	0	0	0

Figure 5-13 Vector Base Address Register (VBA)

5.6.11.1 Reserved—Bits 15–13

This bit field is reserved or not implemented. It is read as 0 and cannot be modified by writing.

5.6.11.2 Interrupt Vector Base Address (VECTOR BASE ADDRESS)—Bits 12–0

The contents of this register determine the location of the Vector Address Table. The value in this register is used as the upper 13 bits of the interrupt Vector Address Bus (VAB[20:0]). The lower eight bits are determined based upon the highest-priority interrupt. They are then appended onto VBA before presenting the full VAB to the 56800E core; see **Part 5.3.1** for details.

5.6.12 Fast Interrupt 0 Match Register (FIM0)

Base + $B	15	14	13	12	11	10	9	8	7	6	5	4	3	2	1	0
Read	0	0	0	0	0	0	0	0	0	FAST INTERRUPT 0						
Write																
RESET	0	0	0	0	0	0	0	0	0	0	0	0	0	0	0	0

Figure 5-14 Fast Interrupt 0 Match Register (FIM0)

5.6.12.1 Reserved—Bits 15–7

This bit field is reserved or not implemented. It is read as 0 and cannot be modified by writing.

5.6.12.2 Fast Interrupt 0 Vector Number (FAST INTERRUPT 0)—Bits 6–0

This value determines which IRQ will be a Fast Interrupt 0. Fast interrupts vector directly to a service routine based on values in the Fast Interrupt Vector Address registers without having to go to a jump table first; see **Part 5.3.3**. IRQs used as fast interrupts *must* be set to priority level 2. Unexpected results will occur if a fast interrupt vector is set to any other priority. Fast interrupts automatically become the highest-priority level 2 interrupt, regardless of their location in the interrupt table, prior to being declared as fast interrupt. Fast Interrupt 0 has priority over Fast Interrupt 1. To determine the vector number of each IRQ, refer to **Table 4-5**.

5.6.13 Fast Interrupt 0 Vector Address Low Register (FIVAL0)

Base + $C	15	14	13	12	11	10	9	8	7	6	5	4	3	2	1	0
Read	FAST INTERRUPT 0 VECTOR ADDRESS LOW															
Write																
RESET	0	0	0	0	0	0	0	0	0	0	0	0	0	0	0	0

Figure 5-15 Fast Interrupt 0 Vector Address Low Register (FIVAL0)

5.6.13.1 Fast Interrupt 0 Vector Address Low (FIVAL0)—Bits 15–0

The lower 16 bits of the vector address used for Fast Interrupt 0. This register is combined with FIVAH0 to form the 21-bit vector address for Fast Interrupt 0 defined in the FIM0 register.

5.6.14 Fast Interrupt 0 Vector Address High Register (FIVAH0)

Base + $D	15	14	13	12	11	10	9	8	7	6	5	4	3	2	1	0
Read	0	0	0	0	0	0	0	0	0	0	0	FAST INTERRUPT 0 VECTOR ADDRESS HIGH				
Write																
RESET	0	0	0	0	0	0	0	0	0	0	0	0	0	0	0	0

Figure 5-16 Fast Interrupt 0 Vector Address High Register (FIVAH0)

5.6.14.1 Reserved—Bits 15–5

This bit field is reserved or not implemented. It is read as 0 and cannot be modified by writing.

5.6.14.2 Fast Interrupt 0 Vector Address High (FIVAH0)—Bits 4–0

The upper five bits of the vector address used for Fast Interrupt 0. This register is combined with FIVAL0 to form the 21-bit vector address for Fast Interrupt 0 defined in the FIM0 register.

5.6.15 Fast Interrupt 1 Match Register (FIM1)

Base + $E	15	14	13	12	11	10	9	8	7	6	5	4	3	2	1	0
Read	0	0	0	0	0	0	0	0	0	FAST INTERRUPT 1						
Write																
RESET	0	0	0	0	0	0	0	0	0	0	0	0	0	0	0	0

Figure 5-17 Fast Interrupt 1 Match Register (FIM1)

5.6.15.1 Reserved—Bits 15–7

This bit field is reserved or not implemented. It is read as 0, but cannot be modified by writing.

5.6.15.2 Fast Interrupt 1 Vector Number (FAST INTERRUPT 1)—Bits 6–0

This value determines which IRQ will be a Fast Interrupt 1. Fast interrupts vector directly to a service

routine based on values in the Fast Interrupt Vector Address registers without having to go to a jump table first; see **Part 5.3.3**. IRQs used as fast interrupts *must* be set to priority level 2. Unexpected results will occur if a fast interrupt vector is set to any other priority. Fast interrupts automatically become the highest-priority level 2 interrupt, regardless of their location in the interrupt table, prior to being declared as fast interrupt. Fast Interrupt 0 has priority over Fast Interrupt 1. To determine the vector number of each IRQ, refer to **Table 4-5**.

5.6.16 Fast Interrupt 1 Vector Address Low Register (FIVAL1)

Base + $F	15	14	13	12	11	10	9	8	7	6	5	4	3	2	1	0
Read	FAST INTERRUPT 1 VECTOR ADDRESS LOW															
Write																
RESET	0	0	0	0	0	0	0	0	0	0	0	0	0	0	0	0

Figure 5-18 Fast Interrupt 1 Vector Address Low Register (FIVAL1)

5.6.16.1 Fast Interrupt 1 Vector Address Low (FIVAL1)—Bits 15–0

The lower 16 bits of vector address are used for Fast Interrupt 1. This register is combined with FIVAH1 to form the 21-bit vector address for Fast Interrupt 1 defined in the FIM1 register.

5.6.17 Fast Interrupt 1 Vector Address High Register (FIVAH1)

Base + $10	15	14	13	12	11	10	9	8	7	6	5	4	3	2	1	0
Read	0	0	0	0	0	0	0	0	0	0	0	FAST INTERRUPT 1 VECTOR ADDRESS HIGH				
Write																
RESET	0	0	0	0	0	0	0	0	0	0	0	0	0	0	0	0

Figure 5-19 Fast Interrupt 1 Vector Address High Register (FIVAH1)

5.6.17.1 Reserved—Bits 15–5

This bit field is reserved or not implemented. It is read as 0 and cannot be modified by writing.

5.6.17.2 Fast Interrupt 1 Vector Address High (FIVAH1)—Bits 4–0

The upper five bits of the vector address are used for Fast Interrupt 1. This register is combined with FIVAL1 to form the 21-bit vector address for Fast Interrupt 1 defined in the FIM1 register.

5.6.18 IRQ Pending 0 Register (IRQP0)

Base + $11	15	14	13	12	11	10	9	8	7	6	5	4	3	2	1	0
Read	PENDING [16:2]															1
Write																
RESET	1	1	1	1	1	1	1	1	1	1	1	1	1	1	1	1

Figure 5-20 IRQ Pending 0 Register (IRQP0)

5.6.18.1 IRQ Pending (PENDING)—Bits 16–2

This register combines with the other five to represent the pending IRQs for interrupt vector numbers 2 through 81.

- 0 = IRQ pending for this vector number
- 1 = No IRQ pending for this vector number

5.6.18.2 Reserved—Bit 0

This bit is reserved or not implemented. It is read as 1 and cannot be modified by writing.

5.6.19 IRQ Pending 1 Register (IRQP1)

$Base + $12	15	14	13	12	11	10	9	8	7	6	5	4	3	2	1	0
Read	PENDING [32:17]															
Write																
RESET	1	1	1	1	1	1	1	1	1	1	1	1	1	1	1	1

Figure 5-21 IRQ Pending 1 Register (IRQP1)

5.6.19.1 IRQ Pending (PENDING)—Bits 32–17

This register combines with the other five to represent the pending IRQs for interrupt vector numbers 2 through 81.

- 0 = IRQ pending for this vector number
- 1 = No IRQ pending for this vector number

5.6.20 IRQ Pending 2 Register (IRQP2)

Base + $13	15	14	13	12	11	10	9	8	7	6	5	4	3	2	1	0
Read	PENDING [48:33]															
Write																
RESET	1	1	1	1	1	1	1	1	1	1	1	1	1	1	1	1

Figure 5-22 IRQ Pending 2 Register (IRQP2)

5.6.20.1 IRQ Pending (PENDING)—Bits 48–33

This register combines with the other five to represent the pending IRQs for interrupt vector numbers 2 through 81.

- 0 = IRQ pending for this vector number
- 1 = No IRQ pending for this vector number

5.6.21 IRQ Pending 3 Register (IRQP3)

Base + $14	15	14	13	12	11	10	9	8	7	6	5	4	3	2	1	0
Read	PENDING [64:49]															
Write																
RESET	1	1	1	1	1	1	1	1	1	1	1	1	1	1	1	1

Figure 5-23 IRQ Pending 3 Register (IRQP3)

5.6.21.1 IRQ Pending (PENDING)—Bits 64–49

This register combines with the other five to represent the pending IRQs for interrupt vector numbers 2 through 81.

- 0 = IRQ pending for this vector number
- 1 = No IRQ pending for this vector number

5.6.22 IRQ Pending 4 Register (IRQP4)

Base + $15	15	14	13	12	11	10	9	8	7	6	5	4	3	2	1	0
Read	PENDING [80:65]															
Write																
RESET	1	1	1	1	1	1	1	1	1	1	1	1	1	1	1	1

Figure 5-24 IRQ Pending 4 Register (IRQP4)

5.6.22.1 IRQ Pending (PENDING)—Bits 80–65

This register combines with the other five to represent the pending IRQs for interrupt vector numbers 2 through 81.

- 0 = IRQ pending for this vector number
- 1 = No IRQ pending for this vector number

5.6.23 IRQ Pending 5 Register (IRQP5)

Base + $16	15	14	13	12	11	10	9	8	7	6	5	4	3	2	1	0
Read	1	1	1	1	1	1	1	1	1	1	1	1	1	1	1	PEND-ING [81]
Write																
RESET	1	1	1	1	1	1	1	1	1	1	1	1	1	1	1	1

Figure 5-25 IRQ Pending Register 5 (IRQP5)

5.6.23.1 Reserved—Bits 96–82

This bit field is reserved or not implemented. The bits are read as 1 and cannot be modified by writing.

5.6.23.2 IRQ Pending (PENDING)—Bit 81

This register combines with the other five to represent the pending IRQs for interrupt vector numbers 2 through 81.

- 0 = IRQ pending for this vector number
- 1 = No IRQ pending for this vector number

5.6.24 Reserved—Base + 17

5.6.25 Reserved—Base + 18

5.6.26 Reserved—Base + 19

5.6.27 Reserved—Base + 1A

5.6.28 Reserved—Base + 1B

5.6.29 Reserved—Base + 1C

5.6.30 ITCN Control Register (ICTL)

Base + $1D	15	14	13	12	11	10	9	8	7	6	5	4	3	2	1	0
Read	INT	IPIC		VAB							INT_DIS	1	$\overline{\text{IRQB}}$ STATE	$\overline{\text{IRQA}}$ STATE	$\overline{\text{IRQB}}$ EDG	$\overline{\text{IRQA}}$ EDG
Write																
RESET	0	0	0	1	0	0	0	0	0	0	0	1	1	1	0	0

Figure 5-26 ITCN Control Register (ICTL)

5.6.30.1 Interrupt (INT)—Bit 15

This *read-only* bit reflects the state of the interrupt to the 56800E core.

- 0 = No interrupt is being sent to the 56800E core

- 1 = An interrupt is being sent to the 56800E core

5.6.30.2 Interrupt Priority Level (IPIC)—Bits 14–13

These *read-only* bits reflect the state of the new interrupt priority level bits being presented to the 56800E core at the time the last IRQ was taken. This field is only updated when the 56800E core jumps to a new interrupt service routine.

Note: Nested interrupts may cause this field to be updated before the original interrupt service routine can read it.

- 00 = Required nested exception priority levels are 0, 1, 2, or 3
- 01 = Required nested exception priority levels are 1, 2, or 3
- 10 = Required nested exception priority levels are 2 or 3
- 11 = Required nested exception priority level is 3

5.6.30.3 Vector Number - Vector Address Bus (VAB)—Bits 12–6

This *read-only* field shows the vector number (VAB[7:1]) used at the time the last IRQ was taken. This field is only updated when the 56800E core jumps to a new interrupt service routine.

Note: Nested interrupts may cause this field to be updated before the original interrupt service routine can read it.

5.6.30.4 Interrupt Disable (INT_DIS)—Bit 5

This bit allows all interrupts to be disabled.

- 0 = Normal operation (default)
- 1 = All interrupts disabled

5.6.30.5 Reserved—Bit 4

This bit field is reserved or not implemented. It is read as 1 and cannot be modified by writing.

5.6.30.6 $\overline{\text{IRQB}}$ State Pin ($\overline{\text{IRQB}}$ STATE)—Bit 3

This *read-only* bit reflects the state of the external $\overline{\text{IRQB}}$ pin.

5.6.30.7 $\overline{\text{IRQA}}$ State Pin ($\overline{\text{IRQA}}$ STATE)—Bit 2

This *read-only* bit reflects the state of the external $\overline{\text{IRQA}}$ pin.

5.6.30.8 $\overline{\text{IRQB}}$ Edge Pin ($\overline{\text{IRQB}}$ Edg)—Bit 1

This bit controls whether the external $\overline{\text{IRQB}}$ interrupt is edge- or level-sensitive. During Stop and Wait modes, it is automatically level-sensitive.

- 0 = $\overline{\text{IRQB}}$ interrupt is a low-level sensitive (default)
- 1 = $\overline{\text{IRQB}}$ interrupt is falling-edge sensitive.

5.6.30.9 $\overline{\text{IRQA}}$ Edge Pin ($\overline{\text{IRQA}}$ Edg)—Bit 0

This bit controls whether the external $\overline{\text{IRQA}}$ interrupt is edge- or level-sensitive. During Stop and Wait modes, it is automatically level-sensitive.

- 0 = $\overline{\text{IRQA}}$ interrupt is a low-level sensitive (default)
- 1 = $\overline{\text{IRQA}}$ interrupt is falling-edge sensitive.

5.7 Resets

5.7.1 Reset Handshake Timing

The ITCN provides the 56800E core with a reset vector address whenever $\overline{\text{RESET}}$ is asserted. The reset vector will be presented until the second rising clock edge after $\overline{\text{RESET}}$ is released.

5.7.2 ITCN After Reset

After reset, all of the ITCN registers are in their default states. This means all interrupts are disabled, except the core IRQs with fixed priorities:

- Illegal Instruction
- SW Interrupt 3
- HW Stack Overflow
- Misaligned Long Word Access
- SW Interrupt 2
- SW Interrupt 1
- SW Interrupt 0
- SW Interrupt LP

These interrupts are enabled at their fixed priority levels.

Part 6 System Integration Module (SIM)

6.1 Overview

The SIM module is a system catchall for the glue logic that ties together the system-on-chip. It controls distribution of resets and clocks and provides a number of control features. The system integration module is responsible for the following functions:

- Reset sequencing
- Clock generation & distribution
- Stop/Wait control
- Pull-up enables for selected peripherals
- System status registers
- Registers for software access to the JTAG ID of the chip

- Enforcing Flash security

These are discussed in more detail in the sections that follow.

6.2 Features

The SIM has the following features:

- Flash security feature prevents unauthorized access to code/data contained in on-chip Flash memory
- Power-saving clock gating for peripheral
- Three power modes (Run, Wait, Stop) to control power utilization
  - Stop mode shuts down the 56800E core, system clock, peripheral clock, and PLL operation
  - Stop mode entry can optionally disable PLL and Oscillator (low power vs. fast restart); must be explicitly done
  - Wait mode shuts down the 56800E core and unnecessary system clock operation
  - Run mode supports full part operation
- Controls to enable/disable the 56800E core WAIT and STOP instructions
- Calculates base delay for reset extension based upon POR or RESET operations. Reset delay will be either 3 x 32 clocks (phased release of reset) for reset, except for POR, which is 2^{21} clock cycles.
- Controls reset sequencing after reset
- Software-initiated reset
- Four 16-bit registers reset only by a Power-On Reset usable for general-purpose software control
- System Control Register
- Registers for software access to the JTAG ID of the chip

6.3 Operating Modes

Since the SIM is responsible for distributing clocks and resets across the chip, it must understand the various chip operating modes and take appropriate action. These are:

- **Reset Mode,** which has two submodes:
  - POR and $\overline{\text{RESET}}$ operation
    The 56800E core and all peripherals are reset. This occurs when the internal POR is asserted or the $\overline{\text{RESET}}$ pin is asserted.
  - COP reset and software reset operation
    The 56800E core and all peripherals are reset. The MA bit within the OMR is not changed. This allows the software to determine the boot mode (internal or external boot) to be used on the next reset.
- **Run Mode**
  This is the primary mode of operation for this device. In this mode, the 56800E controls chip operation.
- **Debug Mode**
  The 56800E is controlled via JTAG/EOnCE when in debug mode. All peripherals, except the COP and PWMs, continue to run. COP is disabled and PWM outputs are optionally switched off to disable any motor from being driven; see the PWM chapter in the **56F8300 Peripheral User Manual** for details.
- **Wait Mode**
  In Wait mode, the core clock and memory clocks are disabled. Optionally, the COP can be stopped. Similarly, it is an option to switch off PWM outputs to disable any motor from being driven. All other peripherals continue to run.
- **Stop Mode**
  When in Stop mode, the 56800E core, memory, and most peripheral clocks are shut down. Optionally, the COP and CAN can be stopped. For lowest power consumption in Stop mode, the PLL can be shut down. This must be done explicitly before entering Stop mode, since there is no automatic mechanism for this. The CAN (along with any non-gated interrupt) is capable of waking the chip up from Stop mode, but is not fully functional in Stop mode.

6.4 Operating Mode Register

Bit	15	14	13	12	11	10	9	8	7	6	5	4	3	2	1	0
	NL							CM	XP	SD	R	SA	EX	0	MB	MA
Type	R/W							R/W	R/W	R/W	R/W	R/W	R/W		R/W	R/W
RESET	0	0	0	0	0	0	0	0	0	0	0	0	0	0	X	X

Figure 6-1 OMR

The reset state for MB and MA will depend on the Flash secured state. See **Part 4.2** and **Part 7** for detailed information on how the Operating Mode Register (OMR) MA and MB bits operate in this device. For all other bits, see the **DSP56800E Reference Manual**.

Note: The OMR is not a Memory Map register; it is directly accessible in code through the acronym OMR.

6.5 Register Descriptions

Table 6-1 SIM Registers (SIM_BASE = $00F350)

Address Offset	Address Acronym	Register Name	Section Location
Base + $0	SIM_CONTROL	Control Register	6.5.1
Base + $1	SIM_RSTSTS	Reset Status Register	6.5.2
Base + $2	SIM_SCR0	Software Control Register 0	6.5.3
Base + $3	SIM_SCR1	Software Control Register 1	6.5.3
Base + $4	SIM_SCR2	Software Control Register 2	6.5.3
Base + $5	SIM_SCR3	Software Control Register 3	6.5.3
Base + $6	SIM_MSH_ID	Most Significant Half of JTAG ID	6.5.4
Base + $7	SIM_LSH_ID	Least Significant Half of JTAG ID	6.5.5
Base + $8	SIM_PUDR	Pull-up Disable Register	6.5.6
		Reserved	
Base + $A	SIM_CLKOSR	CLKO Select Register	6.5.7
Base + $B	SIM_GPS	GPIO Peripheral Select Register	6.5.7
Base + $C	SIM_PCE	Peripheral Clock Enable Register	6.5.8
Base + $D	SIM_ISALH	I/O Short Address Location High Register	6.5.9
Base + $E	SIM_ISALL	I/O Short Address Location Low Register	6.5.10

Add. Offset	Register Name		15	14	13	12	11	10	9	8	7	6	5	4	3	2	1	0
$0	SIM_CONTROL	R	0	0	0	0	0	0	0	0	0	EMI_MODE	ONCE EBL	SW RST	STOP_DISABLE		WAIT_DISABLE	
		W																
$1	SIM_RSTSTS	R	0	0	0	0	0	0	0	0	0	0	SWR	COPR	EXTR	POR	0	0
		W																
$2	SIM_SCR0	R	FIELD															
		W																
$3	SIM_SCR1	R	FIELD															
		W																
$4	SIM_SCR2	R	FIELD															
		W																
$5	SIM_SCR3	R	FIELD															
		W																
$6	SIM_MSH_ID	R	0	0	0	0	0	0	0	1	1	1	1	1	0	1	0	0
		W																
$7	SIM_LSH_ID	R	0	1	0	0	0	0	0	0	0	0	0	1	1	1	0	1
		W																
$8	SIM_PUDR	R	0	PWMA 1	CAN	EMI_MODE	$\overline{\text{RESET}}$	IRQ	XBOOT	PWMB	PWMA 0	0	CTRL	0	JTAG	0	0	0
		W																
	Reserved																	
$A	SIM_CLKOSR	R	0	0	0	0	0	0	$\overline{\text{A23}}$	$\overline{\text{A22}}$	$\overline{\text{A21}}$	$\overline{\text{A20}}$	CLKDIS	CLKOSEL				
		W																
$B	SIM_GPS	R	0	0	0	0	0	0	0	0	0	0	0	0	C3	C2	C1	C0
		W																

Figure 6-2 SIM Register Map Summary

$C	SIM_PCE	R	EMI	ADCB	ADCA	CAN	DEC1	DEC0	TMRD	TMRC	TMRB	TMRA	SCI1	SCI0	SPI1	SPI0	PWMB	PWMA
		W																
$D	SIM_ISALH	R	1	1	1	1	1	1	1	1	1	1	1	1	1	1	ISAL[23:22]	
		W																
$E	SIM_ISALL	R	ISAL[21:6]															
		W																

= Reserved

Figure 6-2 SIM Register Map Summary (Continued)

6.5.1 SIM Control Register (SIM_CONTROL)

Base + $0	15	14	13	12	11	10	9	8	7	6	5	4	3	2	1	0
Read	0	0	0	0	0	0	0	0	0	EMI_MODE	ONCE EBL	SW RST	STOP_DISABLE		WAIT_DISABLE	
Write																
RESET	0	0	0	0	0	0	0	0	0	0	0	0	0	0	0	0

Figure 6-3 SIM Control Register (SIM_CONTROL)

6.5.1.1 Reserved—Bits 15–7

This bit field is reserved or not implemented. It is read as 0 and cannot be modified by writing.

6.5.1.2 EMI_MODE (EMI_MODE)—Bit 6

This bit reflects the current (non-clocked) state of the EMI_MODE pin. During reset, this bit, coupled with the EXTBOOT signal, is used to initialize address bits [19:16] either as GPIO or as address. These settings can be explicitly overwritten using the appropriate GPIO peripheral enable register at any time after reset. In addition, this pin can be used as a general purpose input pin after reset.

- 0 = External address bits [19:16] are initially programmed as GPIO
- 1 = When booted with EXTBOOT = 1, A[19:16] are initially programmed as address. If EXTBOOT is 0, they are initialized as GPIO.

6.5.1.3 OnCE Enable (OnCE EBL)—Bit 5

- 0 = OnCE clock to 56800E core enabled when core TAP is enabled
- 1 = OnCE clock to 56800E core is always enabled

6.5.1.4 Software Reset (SWRST)—Bit 4

This bit is always read as 0. Writing a 1 to this field will cause the part to reset.

6.5.1.5 Stop Disable (STOP_DISABLE)—Bits 3–2

- 00 - STOP mode will be entered when the 56800E core executes a STOP instruction
- 01 - The 56800E STOP instruction will not cause entry into Stop mode; STOP_DISABLE can be reprogrammed in the future

- 10 - The 56800E STOP instruction will not cause entry into Stop mode; STOP_DISABLE can then only be changed by resetting the device
- 11 - Same operation as 10

6.5.1.6 Wait Disable (WAIT_DISABLE)—Bits 1–0

- 00 - WAIT mode will be entered when the 56800E core executes a WAIT instruction
- 01 - The 56800E WAIT instruction will not cause entry into Wait mode; WAIT_DISABLE can be reprogrammed in the future
- 10 - The 56800E WAIT instruction will not cause entry into Wait mode; WAIT_DISABLE can then only be changed by resetting the device
- 11 - Same operation as 10

6.5.2 SIM Reset Status Register (SIM_RSTSTS)

Bits in this register are set upon any system reset and are initialized only by a Power-On Reset (POR). A reset (other than POR) will only set bits in the register; bits are not cleared. Only software should clear this register.

Base + $1	15	14	13	12	11	10	9	8	7	6	5	4	3	2	1	0
Read	0	0	O	0	0	0	0	0	0	0	SWR	COPR	EXTR	POR	0	0
Write																
RESET	0	0	0	0	0	0	0	0	0	0					0	0

Figure 6-4 SIM Reset Status Register (SIM_RSTSTS)

6.5.2.1 Reserved—Bits 15–6

This bit field is reserved or not implemented. It is read as 0 and cannot be modified by writing.

6.5.2.2 Software Reset (SWR)—Bit 5

When 1, this bit indicates that the previous reset occurred as a result of a software reset (write to SW RST bit in the SIM_CONTROL register). This bit will be cleared by any hardware reset or by software. Writing a 0 to this bit position will set the bit, while writing a 1 to the bit will clear it.

6.5.2.3 COP Reset (COPR)—Bit 4

When 1, the COPR bit indicates the Computer Operating Properly (COP) timer-generated reset has occurred. This bit will be cleared by a Power-On Reset or by software. Writing a 0 to this bit position will set the bit, while writing a 1 to the bit will clear it.

6.5.2.4 External Reset (EXTR)—Bit 3

If 1, the EXTR bit indicates an external system reset has occurred. This bit will be cleared by a Power-On Reset or by software. Writing a 0 to this bit position will set the bit, while writing a 1 to the bit position will clear it. Basically, when the EXTR bit is 1, the previous system reset was caused by the external RESET pin being asserted low.

6.5.2.5 Power-On Reset (POR)—Bit 2

When 1, the POR bit indicates a Power-On Reset occurred some time in the past. This bit can be cleared only by software or by another type of reset. Writing a 0 to this bit will set the bit, while writing a 1 to the bit position will clear the bit. In summary, if the bit is 1, the previous system reset was due to a Power-On Reset.

6.5.2.6 Reserved—Bits 1–0

This bit field is reserved or not implemented. It is read as 0 and cannot be modified by writing.

6.5.3 SIM Software Control Registers (SIM_SCR0, SIM_SCR1, SIM_SCR2, and SIM_SCR3)

Only SIM_SCR0 is shown below. SIM_SCR1, SIM_SCR2, and SIM_SCR3 are identical in functionality.

Base + $2	15	14	13	12	11	10	9	8	7	6	5	4	3	2	1	0
Read	FIELD															
Write																
POR	0	0	0	0	0	0	0	0	0	0	0	0	0	0	0	0

Figure 6-5 SIM Software Control Register 0 (SIM_SCR0)

6.5.3.1 Software Control Data 1 (FIELD)—Bits 15–0

This register is reset only by the Power-On Reset (POR). It has no part-specific functionality and is intended for use by a software developer to contain data that will be unaffected by the other reset sources ($\overline{\text{RESET}}$ pin, software reset, and COP reset).

6.5.4 Most Significant Half of JTAG ID (SIM_MSH_ID)

This read-only register displays the most significant half of the JTAG ID for the chip. This register reads $11F4.

Base + $6	15	14	13	12	11	10	9	8	7	6	5	4	3	2	1	0
Read	0	0	0	0	0	0	0	1	1	1	1	1	0	1	0	0
Write																
RESET	0	0	0	0	0	0	0	1	1	1	1	1	0	1	0	0

Figure 6-6 Most Significant Half of JTAG ID (SIM_MSH_ID)

6.5.5 Least Significant Half of JTAG ID (SIM_LSH_ID)

This read-only register displays the least significant half of the JTAG ID for the chip. This register reads $401D.

Base + $7	15	14	13	12	11	10	9	8	7	6	5	4	3	2	1	0
Read	0	1	0	0	0	0	0	0	0	0	0	1	1	1	0	1
Write																
RESET	0	1	0	0	0	0	0	0	0	0	0	1	1	1	0	1

Figure 6-7 Least Significant Half of JTAG ID (SIM_LSH_ID)

6.5.6 SIM Pull-up Disable Register (SIM_PUDR)

Most of the pins on the chip have on-chip pull-up resistors. Pins which can operate as GPIO can have these resistors disabled via the GPIO function. Non-GPIO pins can have their pull-ups disabled by setting the appropriate bit in this register. Disabling pull-ups is done on a peripheral-by-peripheral basis (for pins not muxed with GPIO). Each bit in the register (see **Figure 6-8**) corresponds to a functional group of pins. See **Table 2-2** to identify which pins can deactivate the internal pull-up resistor.

Base + $8	15	14	13	12	11	10	9	8	7	6	5	4	3	2	1	0
Read	0	PWMA1	CAN	EMI_ MODE	$\overline{\text{RESET}}$	IRQ	XBOOT	PWMB	PWMA0	0	CTRL	0	JTAG	0	0	0
Write																
RESET	0	0	0	0	0	0	0	0	0	0	0	0	0	0	0	0

Figure 6-8 SIM Pull-up Disable Register (SIM_PUDR)

6.5.6.1 Reserved—Bit 15

This bit field is reserved or not implemented. It is read as 0 and cannot be modified by writing.

6.5.6.2 PWMA1—Bit 14

This bit controls the pull-up resistors on the FAULTA3 pin.

6.5.6.3 CAN—Bit 13

This bit controls the pull-up resistors on the CAN_RX pin.

6.5.6.4 EMI_MODE—Bit 12

This bit controls the pull-up resistors on the EMI_MODE pin.

6.5.6.5 $\overline{\text{RESET}}$—Bit 11

This bit controls the pull-up resistors on the $\overline{\text{RESET}}$ pin.

6.5.6.6 IRQ—Bit 10

This bit controls the pull-up resistors on the $\overline{\text{IRQA}}$ and $\overline{\text{IRQB}}$ pins.

6.5.6.7 XBOOT—Bit 9

This bit controls the pull-up resistors on the EXTBOOT pin.

6.5.6.8 PWMB—Bit 8

This bit controls the pull-up resistors on the FAULTB0, FAULTB1, FAULTB2, and FAULTB3 pins.

6.5.6.9 PWMA0—Bit 7

This bit controls the pull-up resistors on the FAULTA0, FAULTA1, and FAULTA2 pins.

6.5.6.10 Reserved—Bit 6

This bit field is reserved or not implemented. It is read as 0 and cannot be modified by writing.

6.5.6.11 CTRL—Bit 5

This bit controls the pull-up resistors on the $\overline{WR}$ and $\overline{RD}$ pins.

6.5.6.12 Reserved—Bit 4

This bit field is reserved or not implemented. It is read as 0 and cannot be modified by writing.

6.5.6.13 JTAG—Bit 3

This bit controls the pull-up resistors on the $\overline{TRST}$, TMS and TDI pins.

6.5.6.14 Reserved—Bits 2 - 0

This bit field is reserved or not implemented. It is read as 0 and cannot be modified by writing.

6.5.7 CLKO Select Register (SIM_CLKOSR)

The CLKO select register can be used to multiplex out any one of the clocks generated inside the clock generation and SIM modules. The default value is SYS_CLK. All other clocks primarily muxed out are for test purposes only, and are subject to significant unspecified latencies at high frequencies.

The upper four bits of the GPIOB register can function as GPIO, A[23:20], or as additional clock output signals. GPIO has priority and is enabled/disabled via the GPIOB_PER. If GPIOB[7:4] are programmed to operate as peripheral outputs, then the choice between A[23:20] and additional clock outputs is done here in the CLKOSR. The default state is for the peripheral function of GPIOB[7:4] to be programmed as A[23:20]. This can be changed by altering A[23:20], as shown in **Figure 6-9**.

Base + $A	15	14	13	12	11	10	9	8	7	6	5	4	3	2	1	0
Read	0	0	0	0	0	0	A23	A22	A21	A20	CLK DIS	CLKOSEL				
Write																
RESET	0	0	0	0	0	0	0	0	0	0	1	0	0	0	0	0

Figure 6-9 CLKO Select Register (SIM_CLKOSR)

6.5.7.1 Reserved—Bits 15–10

This bit field is reserved or not implemented. It is read as 0 and cannot be modified by writing.

6.5.7.2 Alternate GPIOB Peripheral Function Select for A23 (A23)—Bit 9

- 0 = Peripheral output function of GPIOB7 is defined to be A23
- 1 = Peripheral output function of GPIOB7 is defined to be the oscillator clock (MSTR_OSC, see **Figure 3-4**)

6.5.7.3 Alternate GPIOB Peripheral Function Select for A22 (A22)—Bit 8

- 0 = Peripheral output function of GPIOB6 is defined to be A22
- 1 = Peripheral output function of GPIOB6 is defined to be SYS_CLK2

6.5.7.4 Alternate GPIOB Peripheral Function Select for A21 (A21)—Bit 7

- 0 = Peripheral output function of GPIOB5 is defined to be A21
- 1 = Peripheral output function of GPIOB5 is defined to be SYS_CLK

6.5.7.5 Alternate GPIOB Peripheral Function Select for A20 (A20)—Bit 6

- 0 = Peripheral output function of GPIOB4 is defined to be A20
- 1 = Peripheral output function of GPIOB4 is defined to be the prescaler clock (FREF, see **Figure 3-4**)

6.5.7.6 Clockout Disable (CLKDIS)—Bit 5

- 0 = CLKOUT output is enabled and will output the signal indicated by CLKOSEL
- 1 = CLKOUT is tri-stated

6.5.7.7 CLockout Select (CLKOSEL)—Bits 4–0

Selects clock to be muxed out on the CLKO pin.

- 00000 = SYS_CLK (from OCCS - DEFAULT)
- 00001 = Reserved for factory test—56800E clock
- 00010 = Reserved for factory test—XRAM clock
- 00011 = Reserved for factory test—PFLASH odd clock
- 00100 = Reserved for factory test—PFLASH even clock
- 00101 = Reserved for factory test—BFLASH clock
- 00110 = Reserved for factory test—DFLASH clock
- 00111 = Oscillator output
- 01000 = F_{out} (from OCCS)
- 01001 = Reserved for factory test—IPB clock
- 01010 = Reserved for factory test—Feedback (from OCCS, this is path to PLL)
- 01011 = Reserved for factory test—Prescaler clock (from OCCS)
- 01100 = Reserved for factory test—Postscaler clock (from OCCS)
- 01101 = Reserved for factory test—SYS_CLK2 (from OCCS)
- 01110 = Reserved for factory test—SYS_CLK_DIV2
- 01111 = Reserved for factory test—SYS_CLK_D
- 10000 = ADCA clock
- 10001 = ADCB clock

6.5.8 GPIO Peripheral Select Register (SIM_GPS)

The GPIO Peripheral Select register can be used to multiplex out any one of the three alternate peripherals for GPIOC. The default peripheral is *Quad Decoder 1* and *Quad Timer B* (*NOT available in the 56F8146 device*); these peripherals work together.

The four I/O pins associated with GPIOC can function as GPIO, *Quad Decoder 1/Quad Timer B*, or as SPI 1 signals. GPIO is not the default and is enabled/disabled via the GPIOC_PER, as shown in **Figure 6-10** and **Table 6-2**. When GPIOC[3:0] are programmed to operate as peripheral I/O, then the choice between decoder/timer and SPI inputs/outputs is made in the SIM_GPS register and in conjunction with the Quad Timer Status and Control Registers (SCR). The default state is for the peripheral function of GPIOC[3:0] to be programmed as decoder functions. This can be changed by altering the appropriate controls in the indicated registers.

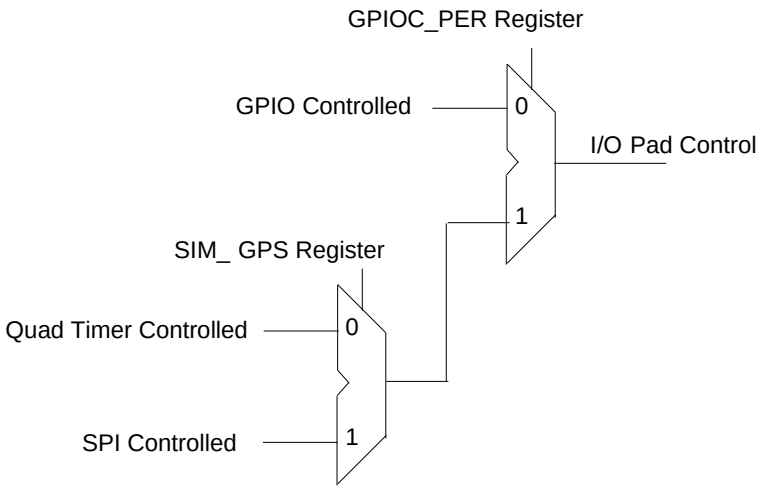

Figure 6-10 Overall Control of Pads Using SIM_GPS Control

Table 6-2 Control of Pads Using SIM_GPS Control [1]

Pin Function	Control Registers				Comments
	GPIOC_PER	GPIOC_DTR	SIM_GPS	Quad Timer SCR Register OEN bits	
GPIO Input	0	0	—	—	
GPIO Output	0	1	—	—	
Quad Timer Input / Quad Decoder Input [2]	1	—	0	0	See the “Switch Matrix for Inputs to the Timer” table in the **56F8300 Peripheral User Manual** for the definition of the timer inputs based on the Quad Decoder Mode configuration.
Quad Timer Output / Quad Decoder Input [3]	1	—	0	1	
SPI input	1	—	1	—	See SPI controls for determining the direction of each of the SPI pins.
SPI output	1	—	1	—	

1. This applies to the four pins that serve as Quad Decoder / Quad Timer / SPI / GPIOC functions. A separate set of control bits is used for each pin.
2. Reset configuration
3. Quad Decoder pins are always inputs and function in conjunction with the Quad Timer pins.

Base + $B	15	14	13	12	11	10	9	8	7	6	5	4	3	2	1	0
Read	0	0	0	0	0	0	0	0	0	0	0	0	C3	C2	C1	C0
Write																
RESET	0	0	0	0	0	0	0	0	0	0	0	0	0	0	0	0

Figure 6-11 GPIO Peripheral Select Register (SIM_GPS)

6.5.8.1 Reserved—Bits 15–4

This bit field is reserved or not implemented. It is read as 0 and cannot be modified by writing.

6.5.8.2 GPIOC3 (C3)—Bit 3

This bit selects the alternate function for GPIOC3.

- 0 = HOME1/TB3 (default - see “Switch Matrix Mode” bits of the Quad Decoder DECCR register in the **56F8300 Peripheral User Manual**)
- 1 = $\overline{SS1}$

6.5.8.3 GPIOC2 (C2)—Bit 2

This bit selects the alternate function for GPIOC2.

- 0 = INDEX1/TB2 (default)
- 1 = MISO1

6.5.8.4 GPIOC1 (C1)—Bit 1

This bit selects the alternate function for GPIOC1.

- 0 = PHASEB1/TB1 (default)
- 1 = MOSI1

6.5.8.5 GPIOC0 (C0)—Bit 0

This bit selects the alternate function for GPIOC0.

- 0 = PHASEA1/TB0 (default)
- 1 = SCLK1

6.5.9 Peripheral Clock Enable Register (SIM_PCE)

The Peripheral Clock Enable register is used to enable or disable clocks to the peripherals as a power savings feature. The clocks can be individually controlled for each peripheral on the chip.

Base + $C	15	14	13	12	11	10	9	8	7	6	5	4	3	2	1	0
Read Write	EMI	ADCB	ADCA	CAN	DEC1	DEC0	TMRD	TMRC	TMRB	TMRA	SCI 1	SCI 0	SPI 1	SPI 0	PWMB	PWMA
RESET	1	1	1	1	1	1	1	1	1	1	1	1	1	1	1	1

Figure 6-12 Peripheral Clock Enable Register (SIM_PCE)

6.5.9.1 External Memory Interface Enable (EMI)—Bit 15

Each bit controls clocks to the indicated peripheral.

- 1 = Clocks are enabled
- 0 = The clock is not provided to the peripheral (the peripheral is disabled)

6.5.9.2 Analog-to-Digital Converter B Enable (ADCB)—Bit 14

Each bit controls clocks to the indicated peripheral.

- 1 = Clocks are enabled
- 0 = The clock is not provided to the peripheral (the peripheral is disabled)

6.5.9.3 Analog-to-Digital Converter A Enable (ADCA)—Bit 13

Each bit controls clocks to the indicated peripheral.

- 1 = Clocks are enabled

- 0 = The clock is not provided to the peripheral (the peripheral is disabled)

6.5.9.4 FlexCAN Enable (CAN)—Bit 12

Each bit controls clocks to the indicated peripheral.

- 1 = Clocks are enabled
- 0 = The clock is not provided to the peripheral (the peripheral is disabled)

6.5.9.5 Decoder 1 Enable (DEC1)—Bit 11

Each bit controls clocks to the indicated peripheral.

- 1 = Clocks are enabled
- 0 = The clock is not provided to the peripheral (the peripheral is disabled)

6.5.9.6 Decoder 0 Enable (DEC0)—Bit 10

Each bit controls clocks to the indicated peripheral.

- 1 = Clocks are enabled
- 0 = The clock is not provided to the peripheral (the peripheral is disabled)

6.5.9.7 Quad Timer D Enable (TMRD)—Bit 9

Each bit controls clocks to the indicated peripheral.

- 1 = Clocks are enabled
- 0 = The clock is not provided to the peripheral (the peripheral is disabled)

6.5.9.8 Quad Timer C Enable (TMRC)—Bit 8

Each bit controls clocks to the indicated peripheral.

- 1 = Clocks are enabled
- 0 = The clock is not provided to the peripheral (the peripheral is disabled)

6.5.9.9 Quad Timer B Enable (TMRB)—Bit 7

Each bit controls clocks to the indicated peripheral.

- 1 = Clocks are enabled
- 0 = The clock is not provided to the peripheral (the peripheral is disabled)

6.5.9.10 Quad Timer A Enable (TMRA)—Bit 6

Each bit controls clocks to the indicated peripheral.

- 1 = Clocks are enabled
- 0 = The clock is not provided to the peripheral (the peripheral is disabled)

6.5.9.11 Serial Communications Interface 1 Enable (SCI1)—Bit 5

Each bit controls clocks to the indicated peripheral.

- 1 = Clocks are enabled
- 0 = The clock is not provided to the peripheral (the peripheral is disabled)

6.5.9.12 Serial Communications Interface 0 Enable (SCI0)—Bit 4

Each bit controls clocks to the indicated peripheral.

- 1 = Clocks are enabled
- 0 = The clock is not provided to the peripheral (the peripheral is disabled)

6.5.9.13 Serial Peripheral Interface 1 Enable (SPI1)—Bit 3

Each bit controls clocks to the indicated peripheral.

- 1 = Clocks are enabled
- 0 = The clock is not provided to the peripheral (the peripheral is disabled)

6.5.9.14 Serial Peripheral Interface 0 Enable (SPI0)—Bit 2

Each bit controls clocks to the indicated peripheral.

- 1 = Clocks are enabled
- 0 = The clock is not provided to the peripheral (the peripheral is disabled)

6.5.9.15 Pulse Width Modulator B Enable (PWMB)—1

Each bit controls clocks to the indicated peripheral.

- 1 = Clocks are enabled
- 0 = The clock is not provided to the peripheral (the peripheral is disabled)

6.5.9.16 Pulse Width Modulator A Enable (PWMA)—0

Each bit controls clocks to the indicated peripheral.

- 1 = Clocks are enabled
- 0 = The clock is not provided to the peripheral (the peripheral is disabled)

6.5.10 I/O Short Address Location Register (SIM_ISALH and SIM_ISALL)

The I/O Short Address Location registers are used to specify the memory referenced via the I/O short address mode. The I/O short address mode allows the instruction to specify the lower six bits of address; the upper address bits are not directly controllable. This register set allows limited control of the full address, as shown in **Figure 6-13**.

Note: If this register is set to something other than the top of memory (EOnCE register space) and the EX bit in the OMR is set to 1, the JTAG port cannot access the on-chip EOnCE registers, and debug functions will be affected.

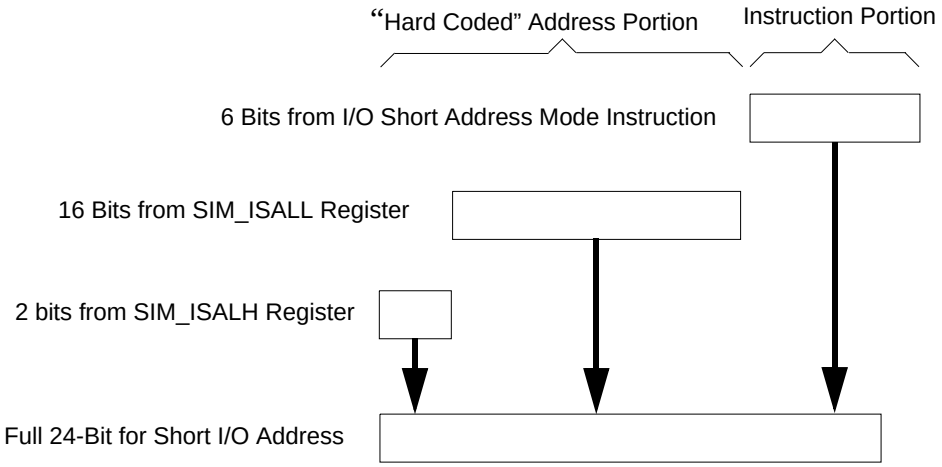

Figure 6-13 I/O Short Address Determination

With this register set, an interrupt driver can set the SIM_ISALL register pair to point to its peripheral registers and then use the I/O Short addressing mode to reference them. The ISR should restore this register to its previous contents prior to returning from interrupt.

Note: The default value of this register set points to the EOnCE registers.

Note: The pipeline delay between setting this register set and using short I/O addressing with the new value is three cycles.

Base + $D	15	14	13	12	11	10	9	8	7	6	5	4	3	2	1	0
Read	1	1	1	1	1	1	1	1	1	1	1	1	1	1	ISAL[23:22]	
Write																
RESET	1	1	1	1	1	1	1	1	1	1	1	1	1	1	1	1

Figure 6-14 I/O Short Address Location High Register (SIM_ISALH)

6.5.10.1 Input/Output Short Address Low (ISAL[23:22])—Bit 1–0

This field represents the upper two address bits of the “hard coded” I/O short address.

Base + $E	15	14	13	12	11	10	9	8	7	6	5	4	3	2	1	0
Read	ISAL[21:6]															
Write																
RESET	1	1	1	1	1	1	1	1	1	1	1	1	1	1	1	1

Figure 6-15 I/O Short Address Location Low Register (SIM_ISALL)

6.5.10.2 Input/Output Short Address Low (ISAL[21:6])—Bit 15–0

This field represents the lower 16 address bits of the “hard coded” I/O short address.

6.6 Clock Generation Overview

The SIM uses an internal master clock from the OCCS (CLKGEN) module to produce the peripheral and system (core and memory) clocks. The maximum master clock frequency is 120MHz. Peripheral and system clocks are generated at half the master clock frequency and therefore at a maximum 60MHz. The SIM provides power modes (Stop, Wait) and clock enables (SIM_PCE register, CLK_DIS, ONCE_EBL) to control which clocks are in operation. The OCCS, power modes, and clock enables provide a flexible means to manage power consumption.

Power utilization can be minimized in several ways. In the OCCS, crystal oscillator, and PLL may be shut down when not in use. When the PLL is in use, its prescaler and postscaler can be used to limit PLL and master clock frequency. Power modes permit system and/or peripheral clocks to be disabled when unused. Clock enables provide the means to disable individual clocks. Some peripherals provide further controls to disable unused subfunctions. Refer to the **Part 3 On-Chip Clock Synthesis (OCCS)**, and the **56F8300 Peripheral User Manual** for further details.

6.7 Power-Down Modes Overview

The 56F8346/56F8146 devices operate in one of three power-down modes, as shown in **Table 6-3**.

Table 6-3 Clock Operation in Power-Down Modes

Mode	Core Clocks	Peripheral Clocks	Description
Run	Active	Active	Device is fully functional
Wait	Core and memory clocks disabled	Active	Peripherals are active and can product interrupts if they have not been masked off. Interrupts will cause the core to come out of its suspended state and resume normal operation. Typically used for power-conscious applications.
Stop	System clocks continue to be generated in the SIM, but most are gated prior to reaching memory, core and peripherals.		The only possible recoveries from Stop mode are: 1. CAN traffic (1st message will be lost) 2. Non-clocked interrupts 3. COP reset 4. External reset 5. Power-on reset

All peripherals, except the COP/watchdog timer, run off the IPBus clock frequency, which is the same as the main processor frequency in this architecture. The maximum frequency of operation is SYS_CLK = 60MHz.

6.8 Stop and Wait Mode Disable Function

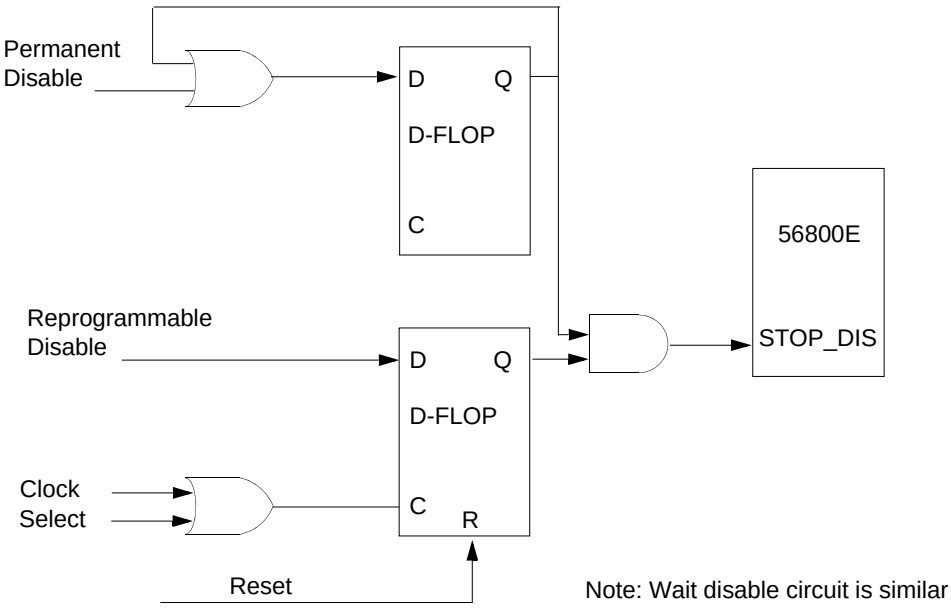

Figure 6-16 Internal Stop Disable Circuit

The 56800E core contains both STOP and WAIT instructions. Both put the CPU to sleep. For lowest power consumption in Stop mode, the PLL can be shut down. This must be done explicitly before entering Stop mode, since there is no automatic mechanism for this. When the PLL is shut down, the 56800E system clock must be set equal to the prescaler output.

Some applications require the 56800E STOP and WAIT instructions be disabled. To disable those instructions, write to the SIM control register (SIM_CONTROL), described in **Part 6.5.1**. This procedure can be on either a permanent or temporary basis. Permanently assigned applications last only until their next reset.

6.9 Resets

The SIM supports four sources of reset. The two asynchronous sources are the external $\overline{\text{RESET}}$ pin and the Power-On Reset (POR). The two synchronous sources are the software reset, which is generated within the SIM itself by writing to the SIM_CONTROL register, and the COP reset.

Reset begins with the assertion of any of the reset sources. Release of reset to various blocks is sequenced to permit proper operation of the device. A POR reset is first extended for 2^{21} clock cycles to permit stabilization of the clock source, followed by a 32 clock window in which SIM clocking is initiated. It is then followed by a 32 clock window in which peripherals are released to implement Flash security, and, finally, followed by a 32 clock window in which the core is initialized. After completion of the described reset sequence, application code will begin execution.

Resets may be asserted asynchronously, but they are always released internally on a rising edge of the system clock.

Part 7 Security Features

The 56F8346/56F8146 offer security features intended to prevent unauthorized users from reading the contents of the Flash Memory (FM) array. The Flash security consists of several hardware interlocks that block the means by which an unauthorized user could gain access to the Flash array.

However, part of the security must lie with the user's code. An extreme example would be user's code that dumps the contents of the internal program, as this code would defeat the purpose of security. At the same time, the user may also wish to put a "backdoor" in his program. As an example, the user downloads a security key through the SCI, allowing access to a programming routine that updates parameters stored in another section of the Flash.

7.1 Operation with Security Enabled

Once the user has programmed the Flash with his application code, the device can be secured by programming the security bytes located in the FM configuration field, which occupies a portion of the FM array. These non-volatile bytes will keep the part secured through reset and through power-down of the device. Only two bytes within this field are used to enable or disable security. Refer to the Flash Memory section in the **56F8300 Peripheral User Manual** for the state of the security bytes and the resulting state of security. When Flash security mode is enabled in accordance with the method described in the Flash Memory module specification, the device will disable external P-space accesses restricting code execution to internal memory, disable EXTBOOT = 1 mode, and disable the core EOnCE debug capabilities. Normal program execution is otherwise unaffected.

7.2 Flash Access Blocking Mechanisms

The 56F8346/56F8146 have several operating functional and test modes. Effective Flash security must address operating mode selection and anticipate modes in which the on-chip Flash can be compromised and read without explicit user permission. Methods to block these are outlined in the next subsections.

7.2.1 Forced Operating Mode Selection

At boot time, the SIM determines in which functional modes the device will operate. These are:

- Internal Boot Mode
- External Boot Mode
- Secure Mode

When Flash security is enabled as described in the Flash Memory module specification, the device will boot in internal boot mode, disable all access to external P-space, and start executing code from the Boot Flash at address 0x02_0000.

This security affords protection only to applications in which the device operates in internal Flash security

mode. Therefore, the security feature cannot be used unless all executing code resides on-chip.

When security is enabled, any attempt to override the default internal operating mode by asserting the EXTBOOT pin in conjunction with reset will be ignored.

7.2.2 Disabling EOnCE Access

On-chip Flash can be read by issuing commands across the EOnCE port, which is the debug interface for the 56800E core. The TRST, TCLK, TMS, TDO, and TDI pins comprise a JTAG interface onto which the EOnCE port functionality is mapped. When the device boots, the chip-level JTAG TAP (Test Access Port) is active and provides the chip's boundary scan capability and access to the ID register.

Proper implementation of Flash security requires that no access to the EOnCE port is provided when security is enabled. The 56800E core has an input which disables reading of internal memory via the JTAG/EOnCE. The FM sets this input at reset to a value determined by the contents of the FM security bytes.

7.2.3 Flash Lockout Recovery

If a user inadvertently enables Flash security on the device, a built-in lockout recovery mechanism can be used to reenable access to the device. This mechanism completely reases all on-chip Flash, thus disabling Flash security. Access to this recovery mechanism is built into CodeWarrior via an instruction in memory configuration (*.cfg*) files. Add, or uncomment the following configuration command:

unlock_flash_on_connect 1

For more information, please see **CodeWarrior MC56F83xx/DSP5685x Family Targeting Manual**.

The LOCKOUT_RECOVERY instruction has an associated 7-bit Data Register (DR) that is used to control the clock divider circuit within the FM module. This divider, FM_CLKDIV[6:0], is used to control the period of the clock used for timed events in the FM erase algorithm. This register must be set with appropriate values before the lockout sequence can begin. Refer to the JTAG section of the **56F8300 Peripheral User Manual** for more details on setting this register value.

The value of the JTAG FM_CLKDIV[6:0] will replace the value of the FM register FMCLKD that divides down the system clock for timed events, as illustrated in **Figure 7-1**. FM_CLKDIV[6] will map to the PRDIV8 bit, and FM_CLKDIV[5:0] will map to the DIV[5:0] bits. The combination of PRDIV8 and DIV must divide the FM input clock down to a frequency of 150kHz-200kHz. The **"Writing the FMCLKD Register**" section in the Flash Memory chapter of the **56F8300 Peripheral User Manual** gives specific equations for calculating the correct values.

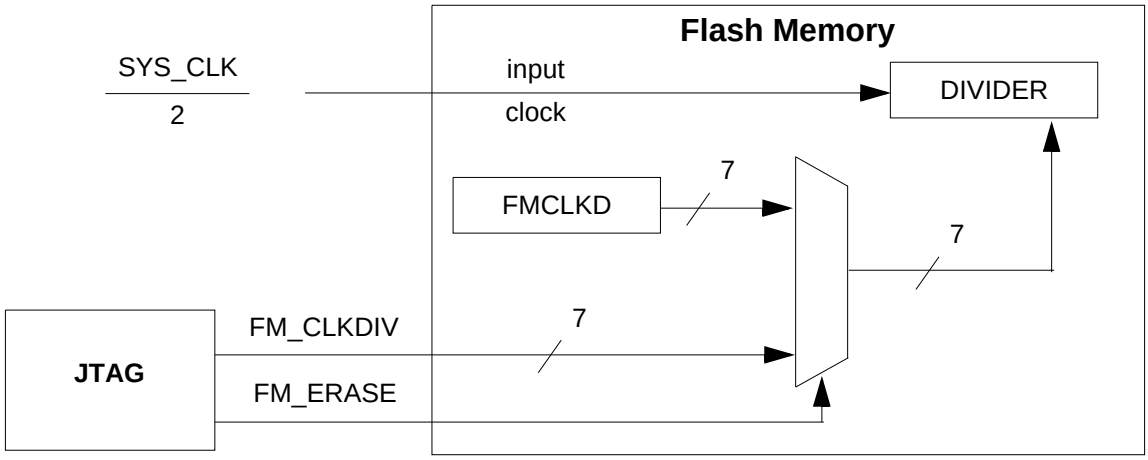

Figure 7-1 JTAG to FM Connection for Lockout Recovery

Two examples of FM_CLKDIV calculations follow.

EXAMPLE 1: If the system clock is the 8MHz crystal frequency because the PLL has not been set up, the input clock will be below 12.8MHz, so PRDIV8 = FM_CLKDIV[6] = 0. Using the following equation yields a DIV value of 19 for a clock of 200kHz, and a DIV value of 20 for a clock of 190kHz. This translates into an FM_CLKDIV[6:0] value of $13 or $14, respectively.

$$150[\text{kHz}] < \frac{\left(\frac{\text{SYS_CLK}}{(2)}\right)}{(\text{DIV} + 1)} < 200[\text{kHz}]$$

EXAMPLE 2: In this example, the system clock has been set up with a value of 32MHz, making the FM input clock 16MHz. Because that is greater than 12.8MHz, PRDIV8 = FM_CLKDIV[6] = 1. Using the following equation yields a DIV value of 9 for a clock of 200kHz, and a DIV value of 10 for a clock of 181kHz. This translates to an FM_CLKDIV[6:0] value of $49 or $4A, respectively.

$$150[\text{kHz}] < \frac{\left(\frac{\text{SYS_CLK}}{(2)}\right)}{(\text{DIV} + 1)} < 200[\text{kHz}]$$

Once the LOCKOUT_RECOVERY instruction has been shifted into the instruction register, the clock divider value must be shifted into the corresponding 7-bit data register. After the data register has been updated, the user must transition the TAP controller into the RUN-TEST/IDLE state for the lockout sequence to commence. The controller must remain in this state until the erase sequence has completed. For details, see the JTAG Section in the **56F8300 Peripheral User Manual**.

Note: Once the lockout recovery sequence has completed, the user must reset both the JTAG TAP controller (by asserting $\overline{\text{TRST}}$) and the device (by asserting external chip reset) to return to normal unsecured operation.

7.2.4 Product Analysis

The recommended method of unsecuring a programmed device for product analysis of field failures is via the backdoor key access. The customer would need to supply Technical Support with the backdoor key and the protocol to access the backdoor routine in the Flash. Additionally, the KEYEN bit that allows backdoor key access must be set.

An alternative method for performing analysis on a secured hybrid controller would be to mass-erase and reprogram the Flash with the original code, but modify the security bytes.

To insure that a customer does not inadvertently lock himself out of the device during programming, it is recommended that he program the backdoor access key first, his application code second, and the security bytes within the FM configuration field last.

Part 8 General Purpose Input/Output (GPIO)

8.1 Introduction

This section is intended to supplement the GPIO information found in the **56F8300 Peripheral User Manual** and contains only chip-specific information. This information supercedes the generic information in the **56F8300 Peripheral User Manual**.

8.2 Memory Maps

The width of the GPIO port defines how many bits are implemented in each of the GPIO registers. Based on this and the default function of each of the GPIO pins, the reset values of the GPIOx_PUR and GPIOx_PER registers change from port to port. Tables **4-29** through **4-34** define the actual reset values of these registers.

8.3 Configuration

There are six GPIO ports defined on the 56F8346/56F8146. The width of each port and the associated peripheral function is shown in **Table 8-1** and **Table 8-2**. The specific mapping of GPIO port pins is shown in **Table 8-3**.

Table 8-1 56F8346 GPIO Ports Configuration

GPIO Port	Port Width	Available Pins in 56F8346	Peripheral Function	Reset Function
A	14	14	14 pins - EMI Address pins	EMI Address
B	8	1	1 pin - EMI Address pin 7 pins - EMI Address pins - Not available in this package	EMI Address N/A
C	11	11	4 pins -DEC1 / TMRB / SPI1 4 pins -DEC0 / TMRA 3 pins -PWMA current sense	DEC1 / TMRB DEC0 / TMRA PWMA current sense
D	13	9	2 pins - EMI $\overline{CSn}$ 4 pins - EMI $\overline{CSn}$ - Not available in this package 2 pins - SCI1 2 pins - EMI $\overline{CSn}$ 3 pins -PWMB current sense	EMI Chip Selects N/A SCI1 EMI Chip Selects PWMB current sense
E	14	11	2 pins - SCI0 2 pins - EMI Address pins 4 pins - SPI0 1 pin - TMRC 1 pin - TMRC - Not available in this package 2 pins - TMRD 2 pins - TMRD - Not available in this package	SCI0 EMI Address SPI0 TMRC N/A TMRD N/A
F	16	16	16 pins - EMI Data	EMI Data

Table 8-2 56F8146 GPIO Ports Configuration

GPIO Port	Port Width	Available Pins in 56F8146	Peripheral Function	Reset Function
A	14	14	14 pins - EMI Address pins	EMI Address
B	8	1	1 pin - EMI Address pin 7 pins - EMI Address pins - Not available in this package	EMI Address N/A
C	11	11	4 pins - SPI1 4 pins - DEC0 / TMRA 3 pins - Dedicated GPIO	SPI1 DEC0 / TMRA GPIO
D	13	9	2 pins - EMI $\overline{CSn}$ 4 pins - EMI $\overline{CSn}$ - Not available in this package 2 pins - SCI1 2 pins - EMI $\overline{CSn}$ 3 pins - PWMB current sense	EMI Chip Selects N/A SCI1 EMI Chip Selects PWMB current sense

Table 8-2 56F8146 GPIO Ports Configuration

GPIO Port	Port Width	Available Pins in 56F8146	Peripheral Function	Reset Function
E	14	11	2 pins - SCI0 2 pins - EMI Address pins 4 pins - SPI0 1 pin - TMRC 1 pin - TMRC - Not available in this package 2 pins - Dedicated GPIO 2 pins - TMRD - Not available in this package	SCI0 EMI Address SPI0 TMRC N/A GPIO N/A
F	16	16	16 pins - EMI Data	EMI Data

Table 8-3 GPIO External Signals Map

Pins in shaded rows are not available in 56F8346/56F8146

Pins in italics are NOT available in the 56F8146 device

GPIO Port	GPIO Bit	Reset Function	Functional Signal	Package Pin
GPIOA	0	Peripheral	A8	19
	1	Peripheral	A9	20
	2	Peripheral	A10	21
	3	Peripheral	A11	22
	4	Peripheral	A12	23
	5	Peripheral	A13	24
	6	Peripheral	A14	25
	7	Peripheral	A15	26
	8	Peripheral	A0	138
	9	Peripheral	A1	10
	10	Peripheral	A2	11
	11	Peripheral	A3	12
	12	Peripheral	A4	13
	13	Peripheral	A5	14

Table 8-3 GPIO External Signals Map (Continued)

Pins in shaded rows are not available in 56F8346/56F8146

Pins in italics are NOT available in the 56F8146 device

GPIO Port	GPIO Bit	Reset Function	Functional Signal	Package Pin
GPIOB	0	GPIO[1]	A16	33
	1	N/A		
	2	N/A		
	3	N/A		
	4	N/A		
	5	N/A		
	6	N/A		
	7	N/A		
[1]This is a function of the EMI_MODE, EXTBOOT, and Flash security settings at reset.				
GPIOC	0	Peripheral	*PhaseA1* / *TB0* / SCLK1[1]	6
	1	Peripheral	*PhaseB1* / *TB1* / MOSI1[1]	7
	2	Peripheral	*Index1* / *TB2* / MISO1[1]	8
	3	Peripheral	*Home1* / *TB3* / $\overline{\text{SS1}}$[1]	9
	4	Peripheral	PHASEA0 / TA0	139
	5	Peripheral	PHASEB0 / TA1	140
	6	Peripheral	INDEX0 / TA2	141
	7	Peripheral	HOME0 / TA3	142
	8	Peripheral	*ISA0*	113
	9	Peripheral	*ISA1*	114
	10	Peripheral	*ISA2*	115

Table 8-3 GPIO External Signals Map (Continued)

Pins in shaded rows are not available in 56F8346/56F8146

Pins in italics are NOT available in the 56F8146 device

GPIO Port	GPIO Bit	Reset Function	Functional Signal	Package Pin
GPIOD	0	GPIO	$\overline{\text{CS2}}$	48
	1	GPIO	$\overline{\text{CS3}}$	49
	2	N/A		
	3	N/A		
	4	N/A		
	5	N/A		
	6	Peripheral	TXD1	42
	7	Peripheral	RXD1	43
	8	Peripheral	$\overline{\text{PS}}$ / $\overline{\text{CS0}}$	46
	9	Peripheral	$\overline{\text{DS}}$ / $\overline{\text{CS1}}$	47
	10	Peripheral	ISB0	50
	11	Peripheral	ISB1	52
	12	Peripheral	ISB2	53

Table 8-3 GPIO External Signals Map (Continued)

Pins in shaded rows are not available in 56F8346/56F8146

Pins in italics are NOT available in the 56F8146 device

GPIO Port	GPIO Bit	Reset Function	Functional Signal	Package Pin
GPIOE	0	Peripheral	TXD0	4
	1	Peripheral	RXD0	5
	2	Peripheral	A6	17
	3	Peripheral	A7	18
	4	Peripheral	SCLK0	130
	5	Peripheral	MOSI0	132
	6	Peripheral	MISO0	131
	7	Peripheral	$\overline{SS0}$	129
	8	Peripheral	TC0	118
	9	N/A		
	10	Peripheral	*TD0*	116
	11	Peripheral	*TD1*	117
	12	N/A		
	13	N/A		

Table 8-3 GPIO External Signals Map (Continued)
Pins in shaded rows are not available in 56F8346/56F8146
Pins in italics are NOT available in the 56F8146 device

GPIO Port	GPIO Bit	Reset Function	Functional Signal	Package Pin
GPIOF	0	Peripheral	D7	28
	1	Peripheral	D8	29
	2	Peripheral	D9	30
	3	Peripheral	D10	32
	4	Peripheral	D11	133
	5	Peripheral	D12	134
	6	Peripheral	D13	135
	7	Peripheral	D14	136
	8	Peripheral	D15	137
	9	Peripheral	D0	59
	10	Peripheral	D1	60
	11	Peripheral	D2	72
	12	Peripheral	D3	75
	13	Peripheral	D4	76
	14	Peripheral	D5	77
	15	Peripheral	D6	78

1. See **Part 6.5.8** to determine how to select peripherals from this set; DEC1 is the selected peripheral at reset .

Part 9 Joint Test Action Group (JTAG)

9.1 JTAG Information

Please contact your Freescale marketing representative or authorized distributor for device/package-specific BSDL information.

Part 10 Specifications

10.1 General Characteristics

The 56F8346/56F8146 are fabricated in high-density CMOS with 5V-tolerant TTL-compatible digital inputs. The term “5V-tolerant” refers to the capability of an I/O pin, built on a 3.3V-compatible process technology, to withstand a voltage up to 5.5V without damaging the device. Many systems have a mixture of devices designed for 3.3V and 5V power supplies. In such systems, a bus may carry both 3.3V- and

5V-compatible I/O voltage levels (a standard 3.3V I/O is designed to receive a maximum voltage of 3.3V ± 10% during normal operation without causing damage). This 5V-tolerant capability therefore offers the power savings of 3.3V I/O levels combined with the ability to receive 5V levels without damage.

Absolute maximum ratings in **Table 10-1** are stress ratings only, and functional operation at the maximum is not guaranteed. Stress beyond these ratings may affect device reliability or cause permanent damage to the device.

Note: All specifications meet both Automotive and Industrial requirements unless individual specifications are listed.

Note: *The 56F8146 device is guaranteed to 40MHz and specified to meet Industrial requirements only; CAN is NOT available on the 56F8146 device.*

CAUTION

This device contains protective circuitry to guard against damage due to high static voltage or electrical fields. However, normal precautions are advised to avoid application of any voltages higher than maximum-rated voltages to this high-impedance circuit. Reliability of operation is enhanced if unused inputs are tied to an appropriate voltage level.

Note: *The 56F8146 device is specified to meet Industrial requirements only; CAN is NOT available on the 56F8146 device.*

Table 10-1 Absolute Maximum Ratings

(V_{SS} = V_{SSA_ADC} = 0)

Characteristic	Symbol	Notes	Min	Max	Unit
Supply voltage	V_{DD_IO}		- 0.3	4.0	V
ADC Supply Voltage	V_{DDA_ADC}, V_{REFH}	V_{REFH} must be less than or equal to V_{DDA_ADC}	- 0.3	4.0	V
Oscillator / PLL Supply Voltage	$V_{DDA_OSC_PLL}$		- 0.3	4.0	V
Internal Logic Core Supply Voltage	V_{DD_CORE}	OCR_DIS is High	- 0.3	3.0	V
Input Voltage (digital)	V_{IN}	Pin Groups 1, 2, 5, 6, 9, 10	-0.3	6.0	V
Input Voltage (analog)	V_{INA}	Pin Groups 11, 12, 13	-0.3	4.0	V
Output Voltage	V_{OUT}	Pin Groups 1, 2, 3, 4, 5, 6, 7, 8	-0.3	4.0 6.0[1]	V
Output Voltage (open drain)	V_{OD}	Pin Group 4	-0.3	6.0	V

Table 10-1 Absolute Maximum Ratings (Continued)

(V_{SS} = V_{SSA_ADC} = 0)

Characteristic	Symbol	Notes	Min	Max	Unit
Ambient Temperature (Automotive)	T_A		-40	125	°C
Ambient Temperature (Industrial)	T_A		-40	105	°C
Junction Temperature (Automotive)	T_J		-40	150	°C
Junction Temperature (Industrial)	T_J		-40	125	°C
Storage Temperature (Automotive)	T_{STG}		-55	150	°C
Storage Temperature (Industrial)	T_{STG}		-55	150	°C

1. If corresponding GPIO pin is configured as open drain.

Note: *Pins in italics are NOT available in the 56F8146 device.*

Pin Group 1: TXD0-1, RXD0-1, $\overline{SS0}$, MISO0, MOSI0
Pin Group 2: PHASEA0, *PHASEA1*, PHASEB0, *PHASEB1*, INDEX0, *INDEX1*, HOME0, *HOME1*, ISB0-2, *ISA0-2,* TC0, SCLK0
Pin Group 3: $\overline{RSTO}$, TDO
Pin Group 4: *CAN_TX*
Pin Group 5: A0-5, D0-15, GPIOD0-1, $\overline{PS}$, $\overline{DS}$
Pin Group 6: A6-15, GPIOB0, *TD0-1*
Pin Group 7: CLKO, $\overline{WR}$, $\overline{RD}$
Pin Group 8: *PWMA0-5*, PWMB0-5
Pin Group 9: $\overline{IRQA}$, $\overline{IRQB}$, $\overline{RESET}$, EXTBOOT, $\overline{TRST}$, TMS, TDI, *CAN_RX*, EMI_MODE, *FAULTA0-3*, FAULTB0-3
Pin Group 10: TCK
Pin Group 11: XTAL, EXTAL
Pin Group 12: ANA0-7, ANB0-7
Pin Group 13: OCR_DIS, CLKMODE

Table 10-2 56F8346/56F8146 ElectroStatic Discharge (ESD) Protection

Characteristic	Min	Typ	Max	Unit
ESD for Human Body Model (HBM)	2000	—	—	V
ESD for Machine Model (MM)	200	—	—	V
ESD for Charge Device Model (CDM)	500	—	—	V

Table 10-3 Thermal Characteristics[6]

Characteristic	Comments	Symbol	Value	Unit	Notes
			144-pin LQFP		
Junction to ambient Natural convection		$R_{\theta JA}$	47.1	°C/W	2

Table 10-3 Thermal Characteristics[6]

Characteristic	Comments	Symbol	Value	Unit	Notes
			144-pin LQFP		
Junction to ambient (@1m/sec)		$R_{\theta JMA}$	43.8	°C/W	2
Junction to ambient Natural convection	Four layer board (2s2p)	$R_{\theta JMA}$ (2s2p)	40.8	°C/W	1,2
Junction to ambient (@1m/sec)	Four layer board (2s2p)	$R_{\theta JMA}$	39.2	°C/W	1,2
Junction to case		$R_{\theta JC}$	11.8	°C/W	3
Junction to center of case		Ψ_{JT}	1	°C/W	4, 5
I/O pin power dissipation		$P_{I/O}$	User-determined	W	
Power dissipation		P_D	$P_D = (I_{DD} \times V_{DD} + P_{I/O})$	W	
Maximum allowed P_D		P_{DMAX}	(TJ - TA) / RθJA[7]	W	

1. Theta-JA determined on 2s2p test boards is frequently lower than would be observed in an application. Determined on 2s2p thermal test board.
2. Junction to ambient thermal resistance, Theta-JA ($R_{\theta JA}$) was simulated to be equivalent to the JEDEC specification JESD51-2 in a horizontal configuration in natural convection. Theta-JA was also simulated on a thermal test board with two internal planes (2s2p, where “s” is the number of signal layers and “p” is the number of planes) per JESD51-6 and JESD51-7. The correct name for Theta-JA for forced convection or with the non-single layer boards is Theta-JMA.
3. Junction to case thermal resistance, Theta-JC ($R_{\theta JC}$), was simulated to be equivalent to the measured values using the cold plate technique with the cold plate temperature used as the "case" temperature. The basic cold plate measurement technique is described by MIL-STD 883D, Method 1012.1. This is the correct thermal metric to use to calculate thermal performance when the package is being used with a heat sink.
4. Thermal Characterization Parameter, Psi-JT (Ψ_{JT}), is the "resistance" from junction to reference point thermocouple on top center of case as defined in JESD51-2. Ψ_{JT} is a useful value to use to estimate junction temperature in steady-state customer environments.
5. Junction temperature is a function of on-chip power dissipation, package thermal resistance, mounting site (board) temperature, ambient temperature, air flow, power dissipation of other components on the board, and board thermal resistance.
6. See **Part 12.1** for more details on thermal design considerations.
7. TJ = Junction temperature
   TA = Ambient temperature

Note: *The 56F8146 device is guaranteed to 40MHz and specified to meet Industrial requirements only; CAN is NOT available on the 56F8146 device.*

Table 10-4 Recommended Operating Conditions

(V_{REFLO} = 0V, V_{SS} = V_{SSA_ADC} = 0V, V_{DDA} = V_{DDA_ADC} = $V_{DDA_OSC_PLL}$)

Characteristic	Symbol	Notes	Min	Typ	Max	Unit
Supply voltage	V_{DD_IO}		3	3.3	3.6	V
ADC Supply Voltage	V_{DDA_ADC}, V_{REFH}	V_{REFH} must be less than or equal to V_{DDA_ADC}	3	3.3	3.6	V
Oscillator / PLL Supply Voltage	$V_{DDA_OSC_PLL}$		3	3.3	3.6	V

Table 10-4 Recommended Operating Conditions

(V_{REFLO} = 0V, V_{SS} = V_{SSA_ADC} = 0V, V_{DDA} = V_{DDA_ADC} = $V_{DDA_OSC_PLL}$)

Characteristic	Symbol	Notes	Min	Typ	Max	Unit
Internal Logic Core Supply Voltage	V_{DD_CORE}	OCR_DIS is High	2.25	2.5	2.75	V
Device Clock Frequency	FSYSCLK		0	—	60	MHz
Input High Voltage (digital)	V_{IN}	Pin Groups 1, 2, 5, 6, 9, 10	2	—	5.5	V
Input High Voltage (analog)	V_{IHA}	Pin Group 13	2	—	V_{DDA}+0.3	V
Input High Voltage (XTAL/EXTAL, XTAL is not driven by an external clock)	V_{IHC}	Pin Group 11	V_{DDA}-0.8	—	V_{DDA}+0.3	V
Input high voltage (XTAL/EXTAL, XTAL is driven by an external clock)	V_{IHC}	Pin Group 11	2	—	V_{DDA}+0.3	V
Input Low Voltage	V_{IL}	Pin Groups 1, 2, 5, 6, 9, 10, 11, 13	-0.3	—	0.8	V
Output High Source Current V_{OH} = 2.4V (V_{OH} min.)	I_{OH}	Pin Groups 1, 2, 3	—	—	-4	mA
		Pin Groups 5, 6, 7	—	—	-8	
		Pin Group 8	—	—	-12	
Output Low Sink Current V_{OL} = 0.4V (V_{OL} max)	I_{OL}	Pin Groups 1, 2, 3, 4	—	—	4	mA
		Pin Groups 5, 6, 7	—	—	8	
		Pin Group 8	—	—	12	
Ambient Operating Temperature (Automotive)	T_A		-40	—	125	°C
Ambient Operating Temperature (Industrial)	T_A		-40	—	105	°C
Flash Endurance (Automotive) (Program Erase Cycles)	N_F	T_A = -40°C to 125°C	10,000	—	—	Cycles
Flash Endurance (Industrial) (Program Erase Cycles)	N_F	T_A = -40°C to 105°C	10,000	—	—	Cycles
Flash Data Retention	T_R	T_J <= 85°C avg	15	—	—	Years

Total chip source or sink current cannot exceed 200mA

See Pin Groups in **Table 10-1**

10.2 DC Electrical Characteristics

Note: *The 56F8146 device is specified to meet Industrial requirements only; CAN is NOT available on the 56F8146 device.*

Table 10-5 DC Electrical Characteristics

At Recommended Operating Conditions; see Table 10-4

Characteristic	Symbol	Notes	Min	Typ	Max	Unit	Test Conditions
Output High Voltage	V_{OH}		2.4	—	—	V	I_{OH} =I_{OHmax}
Output Low Voltage	V_{OL}		—	—	0.4	V	I_{OL} =I_{OLmax}
Digital Input Current High pull-up enabled or disabled	I_{IH}	Pin Groups 1, 2, 5, 6, 9	—	0	+/- 2.5	µA	V_{IN} = 3.0V to 5.5V
Digital Input Current High with pull-down	I_{IH}	Pin Group 10	40	80	160	µA	V_{IN} = 3.0V to 5.5V
Analog Input Current High	I_{IHA}	Pin Group 13	—	0	+/- 2.5	µA	V_{IN} = V_{DDA}
ADC Input Current High	I_{IHADC}	Pin Group 12	—	0	+/- 3.5	µA	V_{IN} = V_{DDA}
Digital Input Current Low pull-up enabled	I_{IL}	Pin Groups 1, 2, 5, 6, 9	-200	-100	-50	µA	V_{IN} = 0V
Digital Input Current Low pull-up disabled	I_{IL}	Pin Groups 1, 2, 5, 6, 9	—	0	+/- 2.5	µA	V_{IN} = 0V
Digital Input Current Low with pull-down	I_{IL}	Pin Group 10	—	0	+/- 2.5	µA	V_{IN} = 0V
Analog Input Current Low	I_{ILA}	Pin Group 13	—	0	+/- 2.5	µA	V_{IN} = 0V
ADC Input Current Low	I_{ILADC}	Pin Group 12	—	0	+/- 3.5	µA	V_{IN} = 0V
EXTAL Input Current Low clock input	I_{EXTAL}		—	0	+/- 2.5	µA	V_{IN} = V_{DDA} or 0V
XTAL Input Current Low clock input	I_{XTAL}	CLKMODE = High	—	0	+/- 2.5	µA	V_{IN} = V_{DDA} or 0V
		CLKMODE = Low	—	—	200	µA	V_{IN} = V_{DDA} or 0V
Output Current High Impedance State	I_{OZ}	Pin Groups 1, 2, 3, 4, 5, 6, 7, 8	—	0	+/- 2.5	µA	V_{OUT} = 3.0V to 5.5V or 0V
Schmitt Trigger Input Hysteresis	V_{HYS}	Pin Groups 2, 6, 9,10	—	0.3	—	V	—
Input Capacitance (EXTAL/XTAL)	C_{INC}		—	4.5	—	pF	—
Output Capacitance (EXTAL/XTAL)	C_{OUTC}		—	5.5	—	pF	—
Input Capacitance	C_{IN}		—	6	—	pF	—
Output Capacitance	C_{OUT}		—	6	—	pF	—

See Pin Groups in **Table 10-1**

Table 10-6 Power on Reset Low Voltage Parameters

Characteristic	Symbol	Min	Typ	Max	Units
POR Trip Point	POR	1.75	1.8	1.9	V
LVI, 2.5 volt Supply, trip point[1]	$V_{EI2.5}$	—	2.14	—	V
LVI, 3.3 volt supply, trip point[2]	$V_{EI3.3}$	—	2.7	—	V
Bias Current	I_{bias}	—	110	130	µA

1. When V_{DD_CORE} drops below $V_{EI2.5}$, an interrupt is generated.
2. When V_{DD_CORE} drops below $V_{EI3.3}$, an interrupt is generated.

Table 10-7 Current Consumption per Power Supply Pin (Typical)
On-Chip Regulator Enabled (OCR_DIS = Low)

Mode	I_{DD_IO}[1]	I_{DD_ADC}	$I_{DD_OSC_PLL}$	Test Conditions
RUN1_MAC	155mA	50mA	2.5mA	• 60MHz Device Clock • All peripheral clocks are enabled • All peripherals running • Continuous MAC instructions with fetches from Data RAM • ADC powered on and clocked
Wait3	91mA	65µA	2.5mA	• 60MHz Device Clock • All peripheral clocks are enabled • ADC powered off
Stop1	5.8mA	0µA	155µA	• 8MHz Device Clock • All peripheral clocks are off • ADC powered off • PLL powered off
Stop2	5.1mA	0µA	145µA	• External Clock is off • All peripheral clocks are off • ADC powered off • PLL powered off

1. No Output Switching
2. Includes Processor Core current supplied by internal voltage regulator

$$R_{ES} = \frac{(V_{REFH} - V_{REFLO}) \times 1}{2^{12} \quad m}$$

Table 10-8 Current Consumption per Power Supply Pin (Typical)
On-Chip Regulator Disabled (OCR_DIS = High)

Mode	I_{DD_Core}	I_{DD_IO}[1]	I_{DD_ADC}	$I_{DD_OSC_PLL}$	Test Conditions
RUN1_MAC	150mA	13µA	50mA	2.5mA	• 60MHz Device Clock • All peripheral clocks are enabled • All peripherals running • Continuous MAC instructions with fetches from Data RAM • ADC powered on and clocked
Wait3	86mA	13µA	65µA	2.5mA	• 60MHz Device Clock • All peripheral clocks are enabled • All peripherals running • ADC powered off
Stop1	800µA	13µA	0µA	155µA	• 8MHz Device Clock • All peripheral clocks are off • ADC powered off • PLL powered off
Stop2	100µA	13µA	0µA	145µA	• External Clock is off • All peripheral clocks are off • ADC powered off • PLL powered off

1. No Output Switching

Table 10-9. Regulator Parameters

Characteristic	Symbol	Min	Typical	Max	Unit
Unloaded Output Voltage (0mA Load)	V_{RNL}	2.25	—	2.75	V
Loaded Output Voltage (200mA load)	V_{RL}	2.25	—	2.75	V
Line Regulation @ 250mA load (V_{DD}33 ranges from 3.0V to 3.6V)	V_R	2.25	—	2.75	V
Short Circuit Current (output shorted to ground)	Iss	—	—	700	mA
Bias Current	I_{bias}	—	5.8	7	mA
Power-down Current	I_{pd}	—	0	2	µA
Short-Circuit Tolerance (output shorted to ground)	T_{RSC}	—	—	30	minutes

Table 10-10. PLL Parameters

Characteristics	Symbol	Min	Typical	Max	Unit
PLL Start-up time	T_{PS}	0.3	0.5	10	ms
Resonator Start-up time	T_{RS}	0.1	0.18	1	ms
Min-Max Period Variation	T_{PV}	120	—	200	ps
Peak-to-Peak Jitter	T_{PJ}	—	—	175	ps
Bias Current	I_{BIAS}	—	1.5	2	mA
Quiescent Current, power-down mode	I_{PD}	—	100	150	µA

10.2.1 Temperature Sense

Note: *Temperature Sensor is NOT available in the 56F8146 device.*

Table 10-11 Temperature Sense Parametrics

Characteristics	Symbol	Min	Typical	Max	Unit
Slope (Gain)[1]	m	—	7.762	—	mV/°C
Room Trim Temp. [1, 2]	T_{RT}	24	26	28	°C
Hot Trim Temp. (Industrial)[1,2]	T_{HT}	122	125	128	°C
Hot Trim Temp. (Automotive)[1,2]	T_{HT}	147	150	153	°C
Output Voltage @ V_{DDA_ADC} = 3.3V, T_J =0°C[1]	V_{TS0}	—	1.370	—	V
Supply Voltage	V_{DDA_ADC}	3.0	3.3	3.6	V
Supply Current - OFF	I_{DD-OFF}	—	—	10	µA
Supply Current - ON	I_{DD-ON}	—	—	250	µA
Accuracy[3,1] from -40°C to 150°C Using V_{TS} = mT + V_{TS0}	T_{ACC}	-6.7	0	6.7	°C
Resolution[4, 5,1]	R_{ES}	—	0.104	—	°C / bit

1. Includes the ADC conversion of the analog Temperature Sense voltage.
2. The ADC is not calibrated for the conversion of the Temperature Sensor trim value stored in the Flash Memory at FMOPT0 and FMOPT1.
3. See Application Note, AN1980, for methods to increase accuracy.
4. Assuming a 12-bit range from 0V to 3.3V.
5. Typical resolution calculated using equation,

10.3 AC Electrical Characteristics

Tests are conducted using the input levels specified in **Table 10-5**. Unless otherwise specified, propagation delays are measured from the 50% to the 50% point, and rise and fall times are measured between the 10% and 90% points, as shown in **Figure 10-1**.

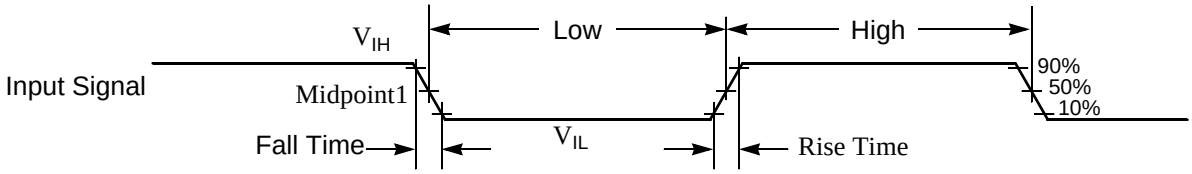

Note: The midpoint is $V_{IL} + (V_{IH} - V_{IL})/2$.

Figure 10-1 Input Signal Measurement References

Figure 10-2 shows the definitions of the following signal states:

- Active state, when a bus or signal is driven, and enters a low impedance state
- Tri-stated, when a bus or signal is placed in a high impedance state
- Data Valid state, when a signal level has reached V_{OL} or V_{OH}
- Data Invalid state, when a signal level is in transition between V_{OL} and V_{OH}

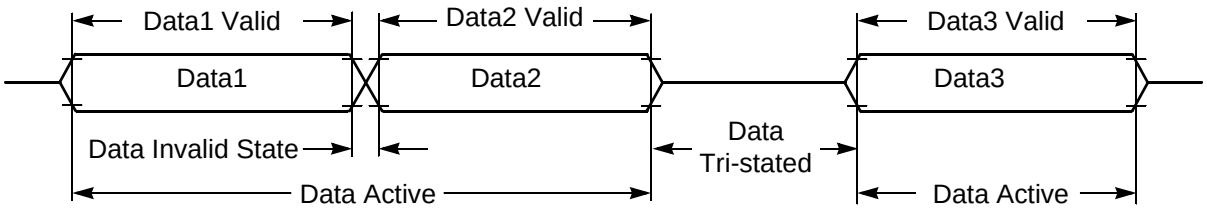

Figure 10-2 Signal States

10.4 Flash Memory Characteristics

Table 10-12 Flash Timing Parameters

Characteristic	Symbol	Min	Typ	Max	Unit
Program time[1]	Tprog	20	—	—	µs
Erase time[2]	Terase	20	—	—	ms
Mass erase time	Tme	100	—	—	ms

1. There is additional overhead which is part of the programming sequence. See the **56F8300 Peripheral User Manual** for details. Program time is per 16-bit word in Flash memory. Two words at a time can be programmed within the Program Flash module, as it contains two interleaved memories.
2. Specifies page erase time. There are 512 bytes per page in the Data and Boot Flash memories. The Program Flash module uses two interleaved Flash memories, increasing the effective page size to 1024 bytes.

10.5 External Clock Operation Timing

Table 10-13 External Clock Operation Timing Requirements[1]

Characteristic	Symbol	Min	Typ	Max	Unit
Frequency of operation (external clock driver)[2]	f_{osc}	0	—	120	MHz
Clock Pulse Width[3]	t_{PW}	3.0	—	—	ns
External clock input rise time[4]	t_{rise}	—	—	10	ns
External clock input fall time[5]	t_{fall}	—	—	10	ns

1. Parameters listed are guaranteed by design.
2. See **Figure 10-3** for details on using the recommended connection of an external clock driver.
3. The high or low pulse width must be no smaller than 8.0ns or the chip will not function.
4. External clock input rise time is measured from 10% to 90%.
5. External clock input fall time is measured from 90% to 10%.

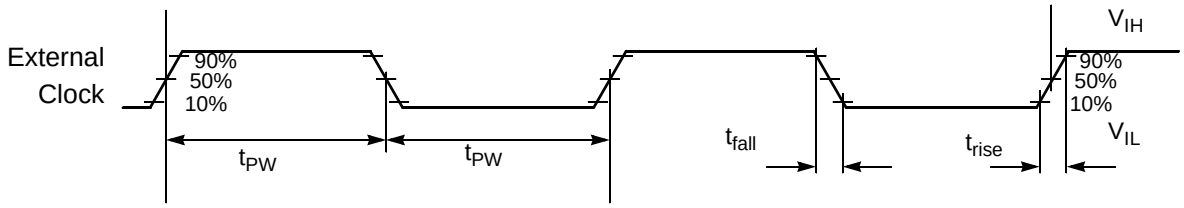

Note: The midpoint is $V_{IL} + (V_{IH} – V_{IL})/2$.

Figure 10-3 External Clock Timing

10.6 Phase Locked Loop Timing

Table 10-14 PLL Timing

Characteristic	Symbol	Min	Typ	Max	Unit
External reference crystal frequency for the PLL[1]	f_{osc}	4	8	8.4	MHz
PLL output frequency[2] (f_{OUT})	f_{op}	160	—	260	MHz
PLL stabilization time[3] -40° to +125°C	t_{plls}	—	1	10	ms

1. An externally supplied reference clock should be as free as possible from any phase jitter for the PLL to work correctly. The PLL is optimized for 8MHz input crystal.
2. ZCLK may not exceed 60MHz. For additional information on ZCLK and (f_{OUT}/2), please refer to the OCCS chapter in the **56F8300 Peripheral User Manual**.

3. This is the minimum time required after the PLL set up is changed to ensure reliable operation.

10.7 Crystal Oscillator Timing

Table 10-15 Crystal Oscillator Parameters

Characteristic	Symbol	Min	Typ	Max	Unit
Crystal Start-up time	T_{CS}	4	5	10	ms
Resonator Start-up time	T_{RS}	0.1	0.18	1	ms
Crystal ESR	R_{ESR}	—	—	120	ohms
Crystal Peak-to-Peak Jitter	T_D	70	—	250	ps
Crystal Min-Max Period Variation	T_{PV}	0.12	—	1.5	ns
Resonator Peak-to-Peak Jitter	T_{RJ}	—	—	300	ps
Resonator Min-Max Period Variation	T_{RP}	—	—	300	ps
Bias Current, high-drive mode	I_{BIASH}	—	250	290	µA
Bias Current, low-drive mode	I_{BIASL}	—	80	110	µA
Quiescent Current, power-down mode	I_{PD}	—	0	1	µA

10.8 External Memory Interface Timing

The External Memory Interface is designed to access static memory and peripheral devices. **Figure 10-4** shows sample timing and parameters that are detailed in **Table 10-16**.

The timing of each parameter consists of both a fixed delay portion and a clock related portion, as well as user controlled wait states. The equation:

$$t = D + P * (M + W)$$

should be used to determine the actual time of each parameter. The terms in this equation are defined as:

- t = Parameter delay time
- D = Fixed portion of the delay, due to on-chip path delays
- P = Period of the system clock, which determines the execution rate of the part (i.e., when the device is operating at 60MHz, P = 16.67 ns)
- M = Fixed portion of a clock period inherent in the design; this number is adjusted to account for possible derating of clock duty cycle
- W = Sum of the applicable wait state controls. The “Wait State Controls” column of **Table 10-16** shows the applicable controls for each parameter and the EMI chapter of the **56F8300 Peripheral User Manual** details what each wait state field controls.

When using the XTAL clock input directly as the chip clock without prescaling (ZSRC selects prescaler clock and prescaler is set to ÷ 1), the EMI quadrature clock is generated using both edges of the EXTAL clock input. In this situation only, parameter values must be adjusted for the duty cycle at XTAL. DCAOE

and DCAEO are used to make this duty cycle adjustment where needed.

DCAOE and DCAEO are calculated as follows:

DCAOE = 0.5 - MAX XTAL duty cycle, if ZSRC selects prescaler clock and the prescaler is set to ÷ 1
= 0.0 all other cases

DCAEO = MIN XTAL duty cycle - 0.5, if ZSRC selects prescaler clock and the prescaler is set to ÷ 1
= 0.0 all other cases

Example of DCAOE and DCAEO calculation

Assuming prescaler is set for ÷ 1 and prescaler clock is selected by ZSRC, if XTAL duty cycle ranges between 45% and 60% high:

DCAOE = .50 - .60 = - 0.1
DCAEO = .45 - .50 = - 0.05

The timing of write cycles is different when WWS = 0 than when WWS > 0. Therefore, some parameters contain two sets of numbers to account for this difference. Use the “Wait States Configuration” column of **Table 10-16** to make the appropriate selection.

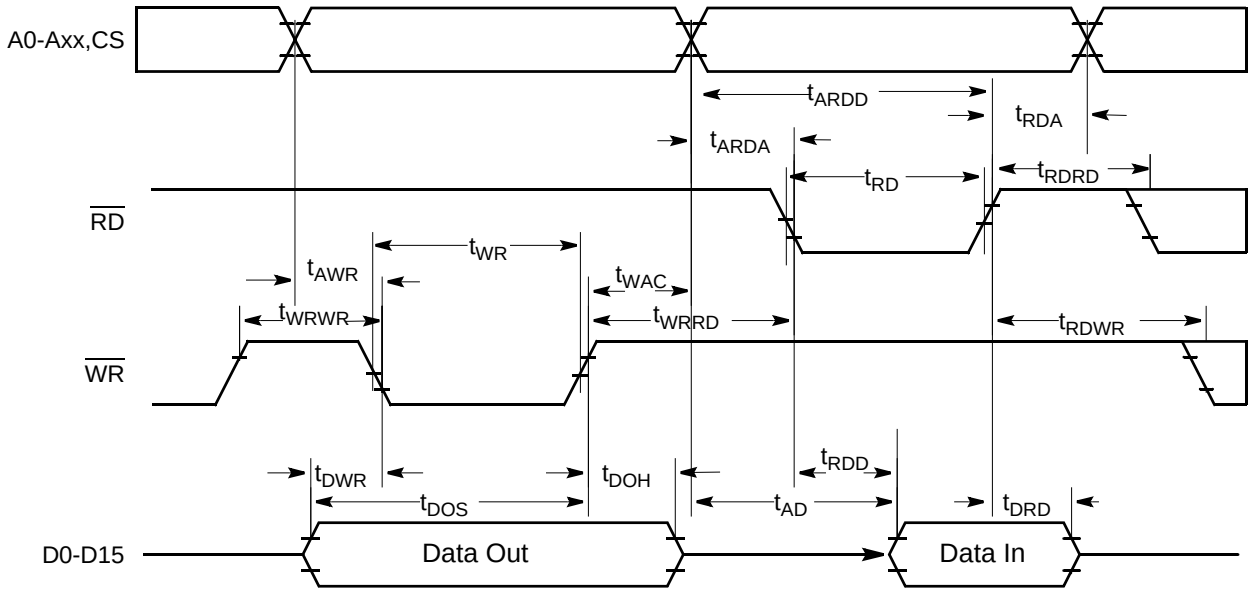

Note: During read-modify-write instructions and internal instructions, the address lines do not change state.

Figure 10-4 External Memory Interface Timing

Note: When multiple lines are given for the same wait state configuration, calculate each and then select the smallest or most negative.

Table 10-16 External Memory Interface Timing

Characteristic	Symbol	Wait States Configuration	D	M	Wait States Controls	Unit
Address Valid to $\overline{WR}$ Asserted	t_{AWR}	WWS=0	-2.121	0.50	WWSS	ns
		WWS>0	-1.805	0.75 + DCAOE		
$\overline{WR}$ Width Asserted to $\overline{WR}$ Deasserted	t_{WR}	WWS=0	-0.063	0.25 + DCAOE	WWS	ns
		WWS>0	-0.253	0		
Data Out Valid to $\overline{WR}$ Asserted	t_{DWR}	WWS=0	-10.252	0.25 + DCAEO	WWSS	ns
		WWS=0	-2.868	0.00		
		WWS>0	-9.505	0.50		
		WWS>0	-2.552	0.25 + DCAOE		
Valid Data Out Hold Time after $\overline{WR}$ Deasserted	t_{DOH}		-1.512	0.25 + DCAEO	WWSH	ns
Valid Data Out Set-Up Time to $\overline{WR}$ Deasserted	t_{DOS}		-2.047	0.25 + DCAOE	WWS, WWSS	ns
			-9.000	0.50		
Valid Address after $\overline{WR}$ Deasserted	t_{WAC}		-3.888	0.25 + DCAEO	WWSH	ns
$\overline{RD}$ Deasserted to Address Invalid	t_{RDA}		-2.922	0.00	RWSH	ns
Address Valid to $\overline{RD}$ Deasserted	t_{ARDD}		-1.645	1.00	RWSS, RWS	ns
Valid Input Data Hold after $\overline{RD}$ Deasserted	t_{DRD}		0.00	N/A[1]	—	ns
$\overline{RD}$ Assertion Width	t_{RD}		0.257	1.00	RWS	ns
Address Valid to Input Data Valid	t_{AD}		-14.414	1.00	RWSS, RWS	ns
			-19.299	1.25 + DCAOE		
Address Valid to $\overline{RD}$ Asserted	t_{ARDA}		-2.002	0.00	RWSS	ns
$\overline{RD}$ Asserted to Input Data Valid	t_{RDD}		-12.411	1.00	RWSS, RWS	ns
			-17.297	1.25 + DCAOE		
$\overline{WR}$ Deasserted to $\overline{RD}$ Asserted	t_{WRRD}		-1.323	0.25 + DCAEO	WWSH, RWSS	ns
$\overline{RD}$ Deasserted to $\overline{RD}$ Asserted	t_{RDRD}		-0.357[2]	0.00	RWSS, RWSH MDAR[3, 4]	ns
$\overline{WR}$ Deasserted to $\overline{WR}$ Asserted	t_{WRWR}	WWS=0	-1.442	0.75 + DCAEO	WWSS, WWSH	ns
		WWS>0	-0.695	1.00		
$\overline{RD}$ Deasserted to $\overline{WR}$ Asserted	t_{RDWR}	WWS=0	-0.476	0.50	RWSH, WWSS, MDAR[3]	ns
		WWS>0	-0.160	0.75 + DCAOE		

1. N/A, since device captures data before it deasserts RD
2. If RWSS = RWSH = 0, and the chip select does not change, then RD does not deassert during back-to-back reads.

3. Substitute BMDAR for MDAR if there is no chip select
4. MDAR is active in this calculation only when the chip select changes.

10.9 Reset, Stop, Wait, Mode Select, and Interrupt Timing

Table 10-17 Reset, Stop, Wait, Mode Select, and Interrupt Timing[1,2]

Characteristic	Symbol	Typical Min	Typical Max	Unit	See Figure
$\overline{\text{RESET}}$ Assertion to Address, Data and Control Signals High Impedance	t_{RAZ}	—	21	ns	10-5
Minimum $\overline{\text{RESET}}$ Assertion Duration	t_{RA}	16T	—	ns	10-5
$\overline{\text{RESET}}$ Deassertion to First External Address Output[3]	t_{RDA}	63T	64T	ns	10-5
Edge-sensitive Interrupt Request Width	t_{IRW}	1.5T	—	ns	10-6
$\overline{\text{IRQA}}$, $\overline{\text{IRQB}}$ Assertion to External Data Memory Access Out Valid, caused by first instruction execution in the interrupt service routine	t_{IDM}	18T	—	ns	10-7
	$t_{IDM - FAST}$	14T	—		
$\overline{\text{IRQA}}$, $\overline{\text{IRQB}}$ Assertion to General Purpose Output Valid, caused by first instruction execution in the interrupt service routine	t_{IG}	18T	—	ns	10-7
	$t_{IG - FAST}$	14T	—		
Delay from $\overline{\text{IRQA}}$ Assertion (exiting Wait) to External Data Memory access[4]	t_{IRI}	22T	—	ns	10-8
	$t_{IRI - FAST}$	18T	—		
Delay from $\overline{\text{IRQA}}$ Assertion to External Data Memory Access (exiting Stop)	t_{IF}	22T	—	ns	10-9
	$t_{IF - FAST}$	18T	—		
$\overline{\text{IRQA}}$ Width Assertion to Recover from Stop State[5]	t_{IW}	1.5T	—	ns	10-9

1. In the formulas, T = clock cycle. For an operating frequency of 60MHz, T = 16.67ns. At 8MHz (used during Reset and Stop modes), T = 125ns.
2. Parameters listed are guaranteed by design.
3. During Power-On Reset, it is possible to use the device's internal reset stretching circuitry to extend this period to 2^{21}T.
4. The minimum is specified for the duration of an edge-sensitive $\overline{\text{IRQA}}$ interrupt required to recover from the Stop state. This is not the minimum required so that the $\overline{\text{IRQA}}$ interrupt is accepted.
5. The interrupt instruction fetch is visible on the pins only in Mode 3.

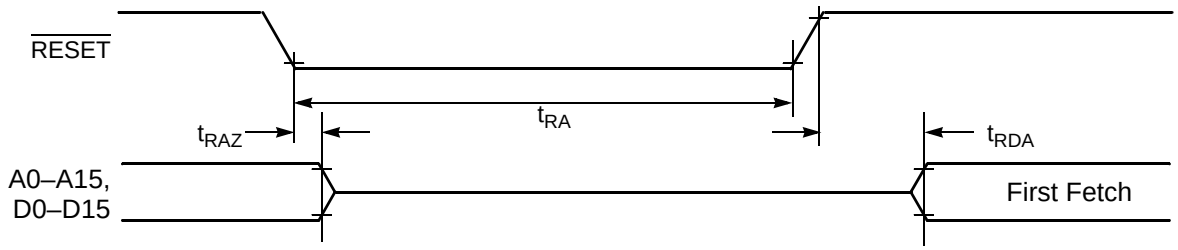

Figure 10-5 Asynchronous Reset Timing

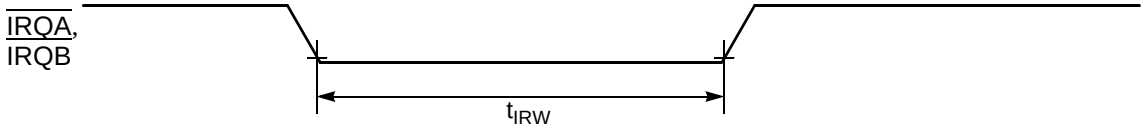

Figure 10-6 External Interrupt Timing (Negative Edge-Sensitive)

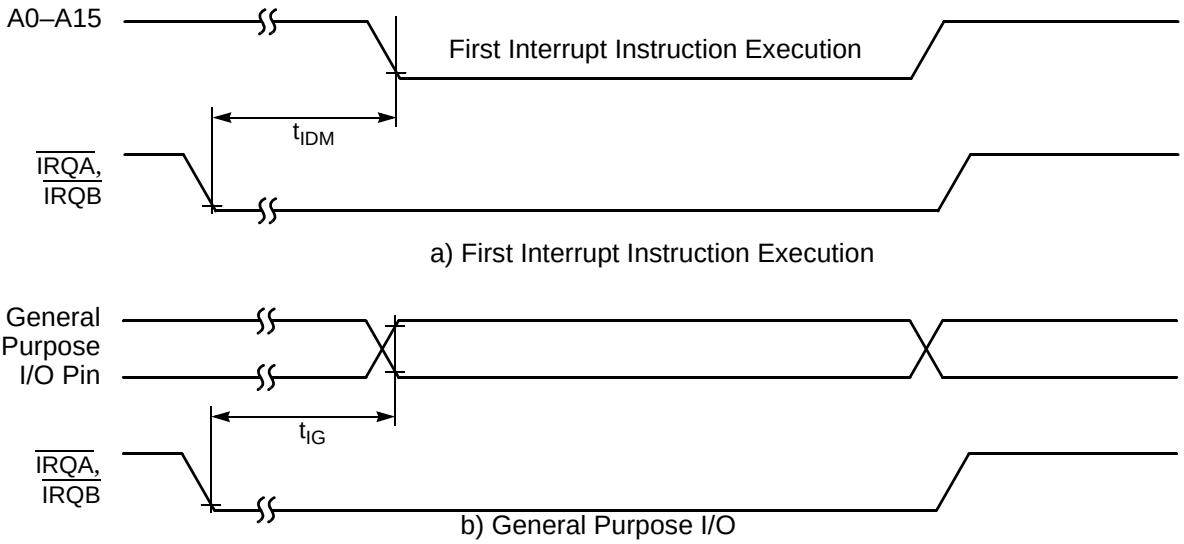

Figure 10-7 External Level-Sensitive Interrupt Timing

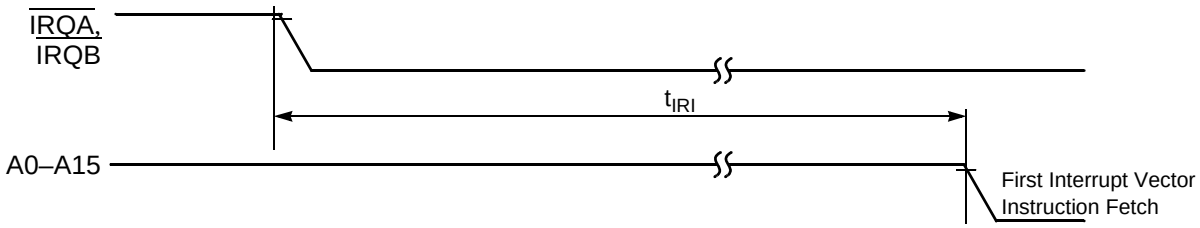

Figure 10-8 Interrupt from Wait State Timing

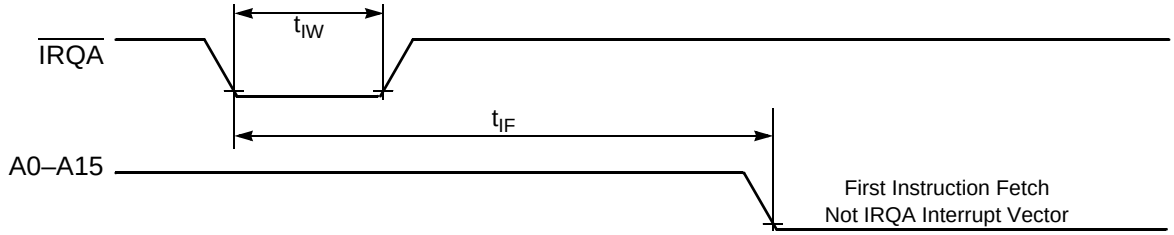

Figure 10-9 Recovery from Stop State Using Asynchronous Interrupt Timing

10.10 Serial Peripheral Interface (SPI) Timing

Table 10-18 SPI Timing[1]

Characteristic	Symbol	Min	Max	Unit	See Figure
Cycle time Master Slave	t_C	 50 50	 — —	 ns ns	10-10, 10-11, 10-12, 10-13
Enable lead time Master Slave	t_{ELD}	 — 25	 — —	 ns ns	10-13
Enable lag time Master Slave	t_{ELG}	 — 100	 — —	 ns ns	10-13
Clock (SCK) high time Master Slave	t_{CH}	 17.6 25	 — —	 ns ns	10-10, 10-11, 10-12, 10-13
Clock (SCK) low time Master Slave	t_{CL}	 24.1 25	 — —	 ns ns	10-13

Table 10-18 SPI Timing[1] (Continued)

Characteristic	Symbol	Min	Max	Unit	See Figure
Data set-up time required for inputs Master Slave	t_{DS}	 20 0	 — —	 ns ns	10-10, 10-11, 10-12, 10-13
Data hold time required for inputs Master Slave	t_{DH}	 0 2	 — —	 ns ns	10-10, 10-11, 10-12, 10-13
Access time (time to data active from high-impedance state) Slave	t_A	4.8	15	ns	10-13
Disable time (hold time to high-impedance state) Slave	t_D	3.7	15.2	ns	10-13
Data Valid for outputs Master Slave (after enable edge)	t_{DV}	 — —	 4.5 20.4	 ns ns	10-10, 10-11, 10-12, 10-13
Data invalid Master Slave	t_{DI}	 0 0	 — —	 ns ns	10-10, 10-11, 10-12
Rise time Master Slave	t_R	 — —	 11.5 10.0	 ns ns	10-10, 10-11, 10-12, 10-13
Fall time Master Slave	t_F	 — —	 9.7 9.0	 ns ns	10-10, 10-11, 10-12, 10-13

1. Parameters listed are guaranteed by design.

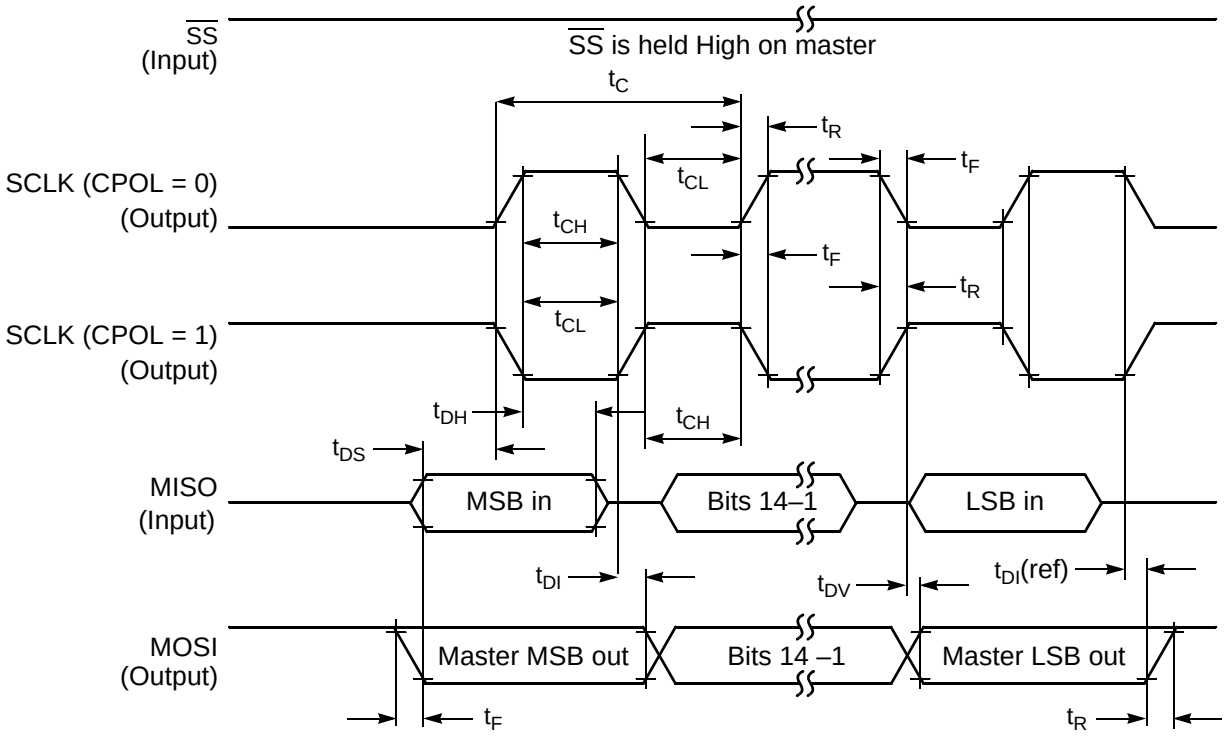

Figure 10-10 SPI Master Timing (CPHA = 0)

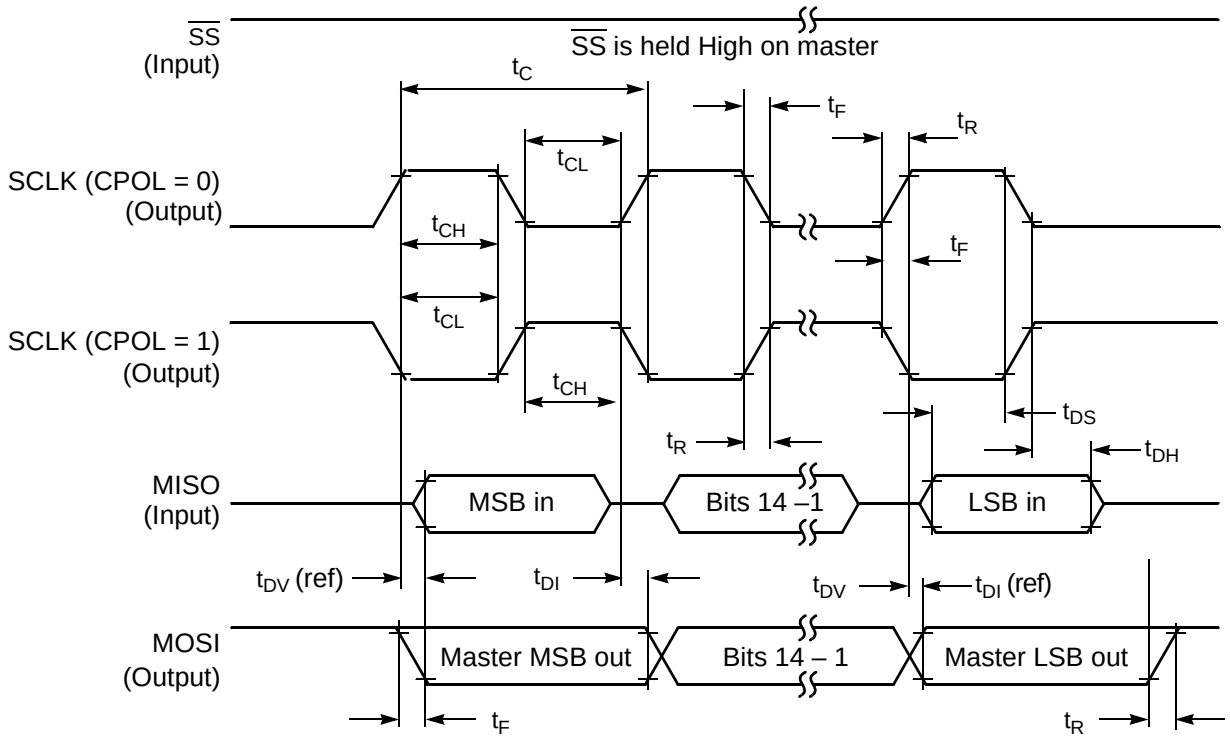

Figure 10-11 SPI Master Timing (CPHA = 1)

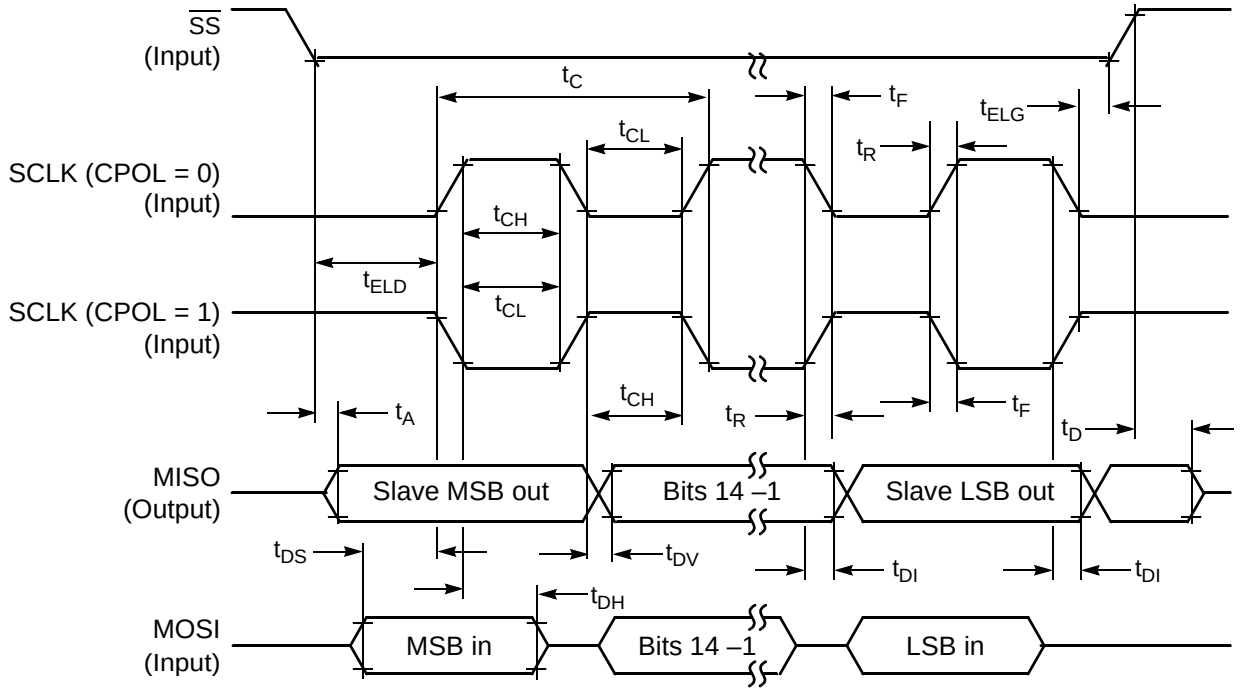

Figure 10-12 SPI Slave Timing (CPHA = 0)

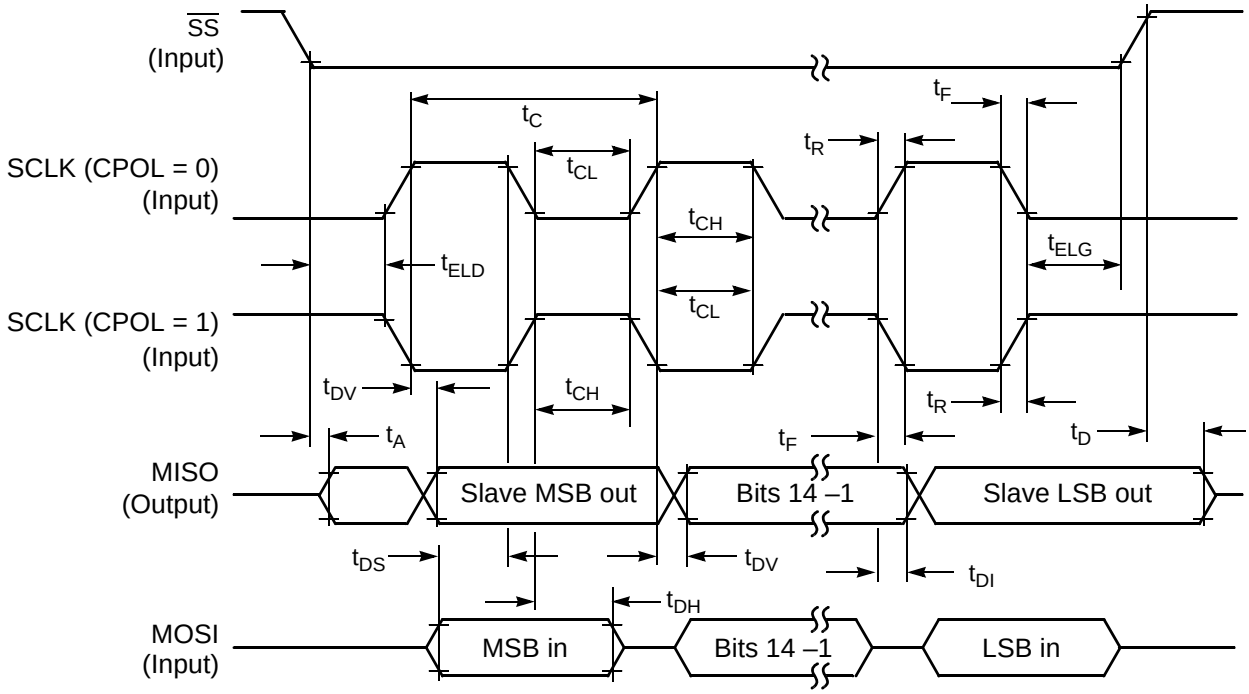

Figure 10-13 SPI Slave Timing (CPHA = 1)

10.11 Quad Timer Timing

Table 10-19 Timer Timing[1, 2]

Characteristic	Symbol	Min	Max	Unit	See Figure
Timer input period	P_{IN}	2T + 6	—	ns	10-14
Timer input high / low period	P_{INHL}	1T + 3	—	ns	10-14
Timer output period	P_{OUT}	1T - 3	—	ns	10-14
Timer output high / low period	P_{OUTHL}	0.5T - 3	—	ns	10-14

1. In the formulas listed, T = the clock cycle. For 60MHz operation, T = 16.67ns.
2. Parameters listed are guaranteed by design.

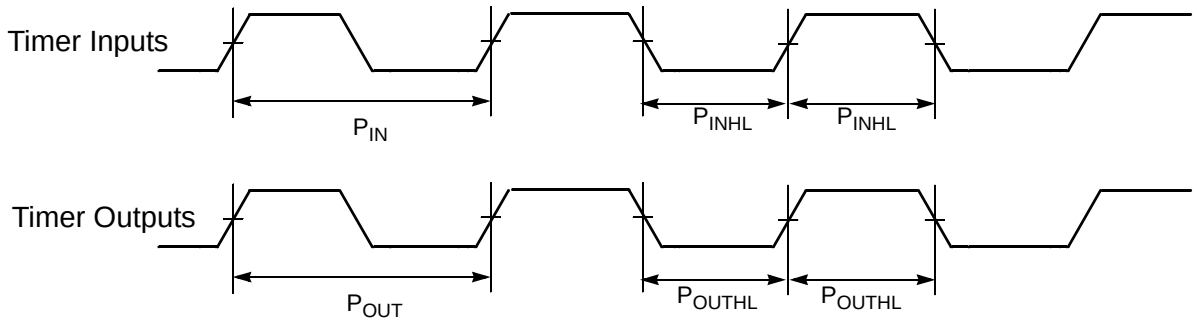

Figure 10-14 Timer Timing

10.12 Quadrature Decoder Timing

Table 10-20 Quadrature Decoder Timing[1, 2]

Characteristic	Symbol	Min	Max	Unit	See Figure
Quadrature input period	P_{IN}	4T + 12	—	ns	10-15
Quadrature input high / low period	P_{HL}	2T + 6	—	ns	10-15
Quadrature phase period	P_{PH}	1T + 3	—	ns	10-15

1. In the formulas listed, T = the clock cycle. For 60MHz operation, T = 16.67ns.
2. Parameters listed are guaranteed by design.

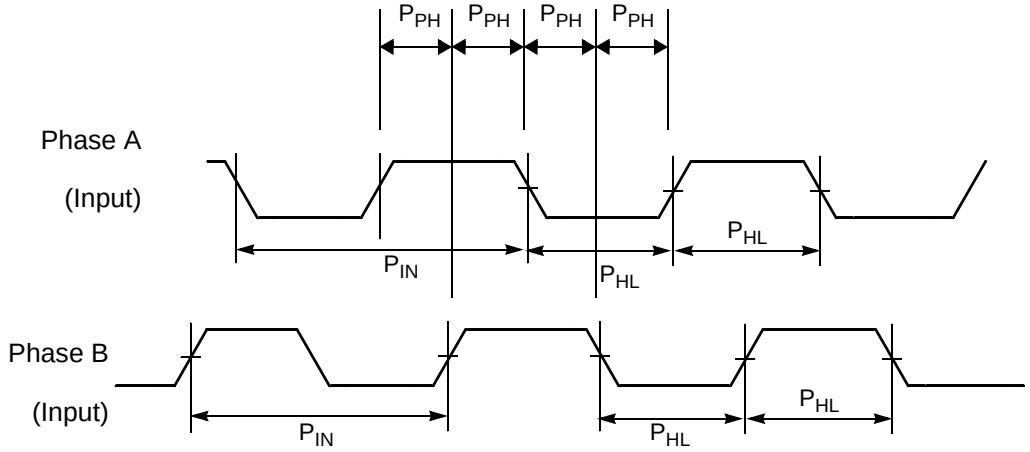

Figure 10-15 Quadrature Decoder Timing

10.13 Serial Communication Interface (SCI) Timing

Table 10-21 SCI Timing[1]

Characteristic	Symbol	Min	Max	Unit	See Figure
Baud Rate[2]	BR	—	(f_{MAX}/16)	Mbps	—
RXD[3] Pulse Width	RXD_{PW}	0.965/BR	1.04/BR	ns	10-16
TXD[4] Pulse Width	TXD_{PW}	0.965/BR	1.04/BR	ns	10-17

1. Parameters listed are guaranteed by design.
2. f_{MAX} is the frequency of operation of the system clock, ZCLK, in MHz, which is 60MHz for the 56F8346 device and 40MHz for the 56F8146 device.
3. The RXD pin in SCI0 is named RXD0 and the RXD pin in SCI1 is named RXD1.
4. The TXD pin in SCI0 is named TXD0 and the TXD pin in SCI1 is named TXD1.

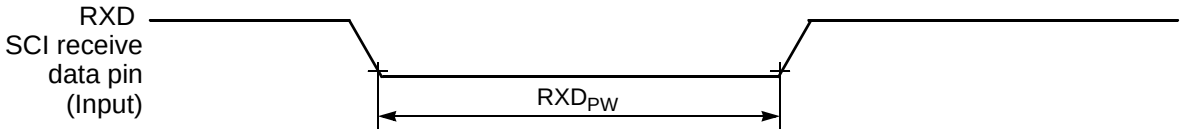

Figure 10-16 RXD Pulse Width

Figure 10-17 TXD Pulse Width

10.14 Controller Area Network (CAN) Timing

Note: *CAN is NOT available in the 56F8146 device.*

Table 10-22 CAN Timing[1]

Characteristic	Symbol	Min	Max	Unit	See Figure
Baud Rate	BR_{CAN}	—	1	Mbps	—
Bus Wake Up detection	T_{WAKEUP}	5	—	µs	10-18

1. Parameters listed are guaranteed by design

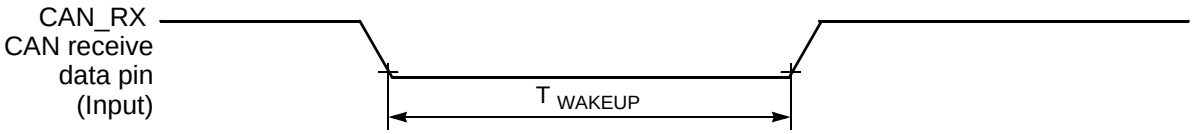

Figure 10-18 Bus Wake Up Detection

10.15 JTAG Timing

Table 10-23 JTAG Timing

Characteristic	Symbol	Min	Max	Unit	See Figure
TCK frequency of operation using EOnCE[1]	f_{OP}	DC	SYS_CLK/8	MHz	10-19
TCK frequency of operation not using EOnCE[1]	f_{OP}	DC	SYS_CLK/4	MHz	10-19
TCK clock pulse width	t_{PW}	50	—	ns	10-19
TMS, TDI data set-up time	t_{DS}	5	—	ns	10-20

Table 10-23 JTAG Timing

Characteristic	Symbol	Min	Max	Unit	See Figure
TMS, TDI data hold time	t_{DH}	5	—	ns	10-20
TCK low to TDO data valid	t_{DV}	—	30	ns	10-20
TCK low to TDO tri-state	t_{TS}	—	30	ns	10-20
$\overline{\text{TRST}}$ assertion time	t_{TRST}	2T[2]	—	ns	10-21

1. TCK frequency of operation must be less than 1/8 the processor rate.
2. T = processor clock period (nominally 1/60MHz)

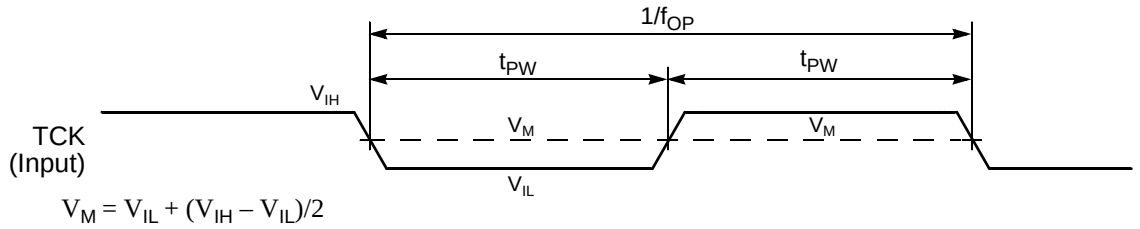

Figure 10-19 Test Clock Input Timing Diagram

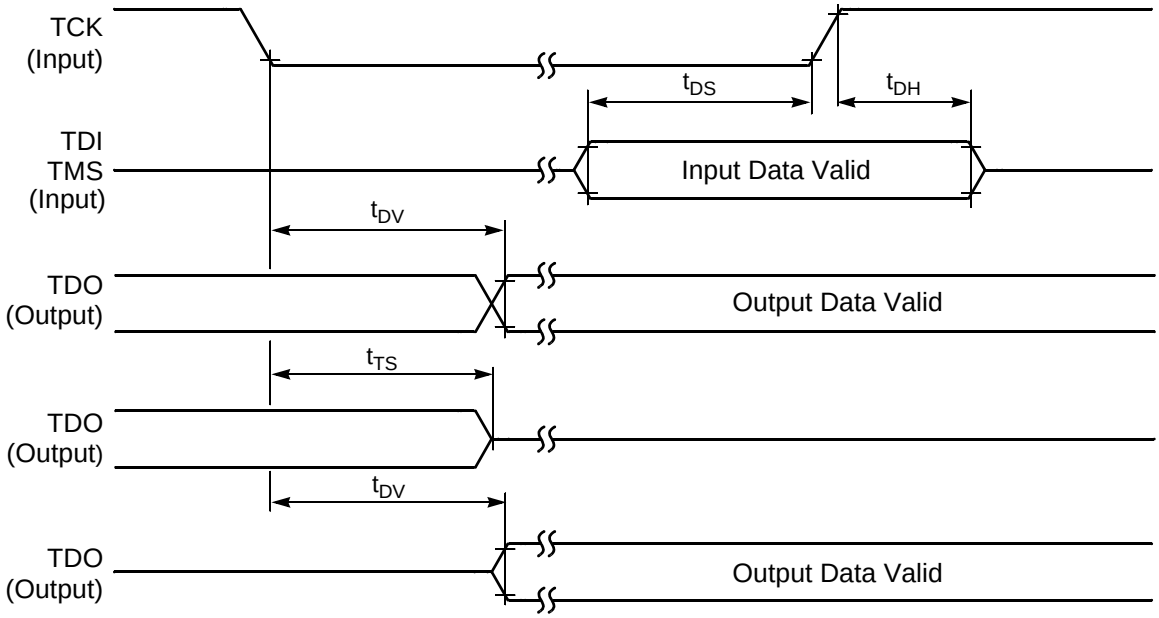

Figure 10-20 Test Access Port Timing Diagram

Figure 10-21 TRST Timing Diagram

10.16 Analog-to-Digital Converter (ADC) Parameters

Table 10-24 ADC Parameters

Characteristic	Symbol	Min	Typ	Max	Unit
Input voltages	V_{ADIN}	V_{REFL}	—	V_{REFH}	V
Resolution	R_{ES}	12	—	12	Bits
Integral Non-Linearity[1]	INL	—	+/- 2.4	+/- 3.2	LSB[2]
Differential Non-Linearity	DNL	—	+/- 0.7	< +1	LSB[2]
Monotonicity	GUARANTEED				
ADC internal clock	f_{ADIC}	0.5	—	5	MHz
Conversion range	R_{AD}	V_{REFL}	—	V_{REFH}	V
ADC channel power-up time	t_{ADPU}	5	6	16	t_{AIC} cycles[3]
ADC reference circuit power-up time[4]	t_{VREF}	—	—	25	ms
Conversion time	t_{ADC}	—	6	—	t_{AIC} cycles[3]
Sample time	t_{ADS}	—	1	—	t_{AIC} cycles[3]
Input capacitance	C_{ADI}	—	5	—	pF
Input injection current[5], per pin	I_{ADI}	—	—	3	mA
Input injection current, total	I_{ADIT}	—	—	20	mA
V_{REFH} current	I_{VREFH}	—	1.2	3	mA
ADC A current	I_{ADCA}	—	25	—	mA
ADC B current	I_{ADCB}	—	25	—	mA
Quiescent current	I_{ADCQ}	—	0	10	μA
Uncalibrated Gain Error (ideal = 1)	E_{GAIN}	—	+/- .004	+/- .015	—
Uncalibrated Offset Voltage	V_{OFFSET}	—	+/- 18	+/- 46	mV
Calibrated Absolute Error[6]	AE_{CAL}	—	See **Figure 10-22**	—	LSBs

Table 10-24 ADC Parameters (Continued)

Characteristic	Symbol	Min	Typ	Max	Unit
Calibration Factor 1[7]	CF1	—	-0.003141	—	—
Calibration Factor 2[7]	CF2	—	-17.6	—	—
Crosstalk between channels	—	—	-60	—	dB
Common Mode Voltage	V_{common}	—	$(V_{REFH} - V_{REFLO}) / 2$	—	V
Signal-to-noise ratio	SNR	—	64.6	—	db
Signal-to-noise plus distortion ratio	SINAD	—	59.1	—	db
Total Harmonic Distortion	THD	—	60.6	—	db
Spurious Free Dynamic Range	SFDR	—	61.1	—	db
Effective Number Of Bits[8]	ENOB	—	9.6	—	Bits

1. INL measured from $V_{in} = .1V_{REFH}$ to $V_{in} = .9V_{REFH}$
   10% to 90% Input Signal Range
2. LSB = Least Significant Bit
3. ADC clock cycles
4. Assumes each voltage reference pin is bypassed with 0.1μF ceramic capacitors to ground
5. The current that can be injected or sourced from an unselected ADC signal input without impacting the performance of the ADC. This allows the ADC to operate in noisy industrial environments where inductive flyback is possible.
6. Absolute error includes the effects of both gain error and offset error.
7. Please see the **56F8300 Peripheral User's Manual** for additional information on ADC calibration.
8. ENOB = (SINAD - 1.76)/6.02

Figure 10-22 ADC Absolute Error Over Processing and Temperature Extremes Before and After Calibration for VDC_{in} = 0.60V and 2.70V

Note: The absolute error data shown in the graphs above reflects the effects of both gain error and offset error. The data was taken on 15 parts: three each from four processing corner lots as well as three from one nominally processed lot, each at three temperatures: -40°C, 27°C, and 150°C (giving the 45 data points shown above), for two input DC voltages: 0.60V and 2.70V. The data indicates that for the given population of parts, calibration significantly reduced (by as much as 39%) the collective variation (spread) of the absolute error of the population. It also significantly reduced (by as much as 80%) the mean (average) of the absolute error and thereby brought it significantly closer to the ideal value of zero. Although not guaranteed, it is believed that calibration will produce results similar to those shown above for any population of parts including those which represent processing and temperature extremes.

10.17 Equivalent Circuit for ADC Inputs

Figure 10-23 illustrates the ADC input circuit during sample and hold. S1 and S2 are always open/closed

at the same time that S3 is closed/open. When S1/S2 are closed & S3 is open, one input of the sample and hold circuit moves to V_{REFH} - V_{REFH} / 2, while the other charges to the analog input voltage. When the switches are flipped, the charge on C1 and C2 are averaged via S3, with the result that a single-ended analog input is switched to a differential voltage centered about V_{REFH} - V_{REFH} / 2. The switches switch on every cycle of the ADC clock (open one-half ADC clock, closed one-half ADC clock). Note that there are additional capacitances associated with the analog input pad, routing, etc., but these do not filter into the S/H output voltage, as S1 provides isolation during the charge-sharing phase.

One aspect of this circuit is that there is an on-going input current, which is a function of the analog input voltage, V_{REF} and the ADC clock frequency.

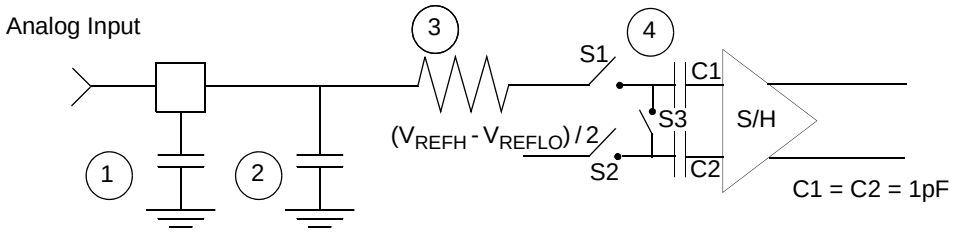

1. Parasitic capacitance due to package, pin-to-pin and pin-to-package base coupling; 1.8pf
2. Parasitic capacitance due to the chip bond pad, ESD protection devices and signal routing; 2.04pf
3. Equivalent resistance for the ESD isolation resistor and the channel select mux; 500 ohms
4. Sampling capacitor at the sample and hold circuit. Capacitor C1 is normally disconnected from the input and is only connected to it at sampling time; 1pf

Figure 10-23 Equivalent Circuit for A/D Loading

10.18 Power Consumption

This section provides additional detail which can be used to optimize power consumption for a given application.

Power consumption is given by the following equation:

Total power = A: internal [static component]
+B: internal [state-dependent component]
+C: internal [dynamic component]
+D: external [dynamic component]
+E: external [static]

A, the internal [static component], is comprised of the DC bias currents for the oscillator, leakage current, PLL, and voltage references. These sources operate independently of processor state or operating frequency.

B, the internal [state-dependent component], reflects the supply current required by certain on-chip resources only when those resources are in use. These include RAM, Flash memory and the ADCs.

C, the internal [dynamic component], is classic $C*V^2*F$ CMOS power dissipation corresponding to the 56800E core and standard cell logic.

D, the external [dynamic component], reflects power dissipated on-chip as a result of capacitive loading on the external pins of the chip. This is also commonly described as $C*V^2*F$, although simulations on two of the IO cell types used on the device reveal that the power-versus-load curve does have a non-zero Y-intercept.

Table 10-25 IO Loading Coefficients at 10MHz

	Intercept	Slope
PDU08DGZ_ME	1.3	0.11mW / pF
PDU04DGZ_ME	1.15mW	0.11mW / pF

Power due to capacitive loading on output pins is (first order) a function of the capacitive load and frequency at which the outputs change. **Table 10-25** provides coefficients for calculating power dissipated in the IO cells as a function of capacitive load. In these cases:

TotalPower = Σ((Intercept +Slope*Cload)*frequency/10MHz)

where:

- Summation is performed over all output pins with capacitive loads
- TotalPower is expressed in mW

- Cload is expressed in pF

Because of the low duty cycle on most device pins, power dissipation due to capacitive loads was found to be fairly low when averaged over a period of time. The one possible exception to this is if the chip is using the external address and data buses at a rate approaching the maximum system rate. In this case, power from these buses can be significant.

E, the external [static component], reflects the effects of placing resistive loads on the outputs of the device. Sum the total of all V^2/R or IV to arrive at the resistive load contribution to power. Assume V = 0.5 for the purposes of these rough calculations. For instance, if there is a total of 8 PWM outputs driving 10mA into LEDs, then P = 8*.5*.01 = 40mW.

In previous discussions, power consumption due to parasitics associated with pure input pins is ignored, as it is assumed to be negligible.

Part 11 Packaging

11.1 56F8346 Package and Pin-Out Information

This section contains package and pin-out information for the 56F8346. This device comes in a 144-pin Low-profile Quad Flat Pack (LQFP). **Figure 11-1** shows the package outline for the LQFP**;** **Figure 11-3** shows the mechanical parameters for this package, and **Table 11-1** lists the pin-out for the 144-pin LQFP.

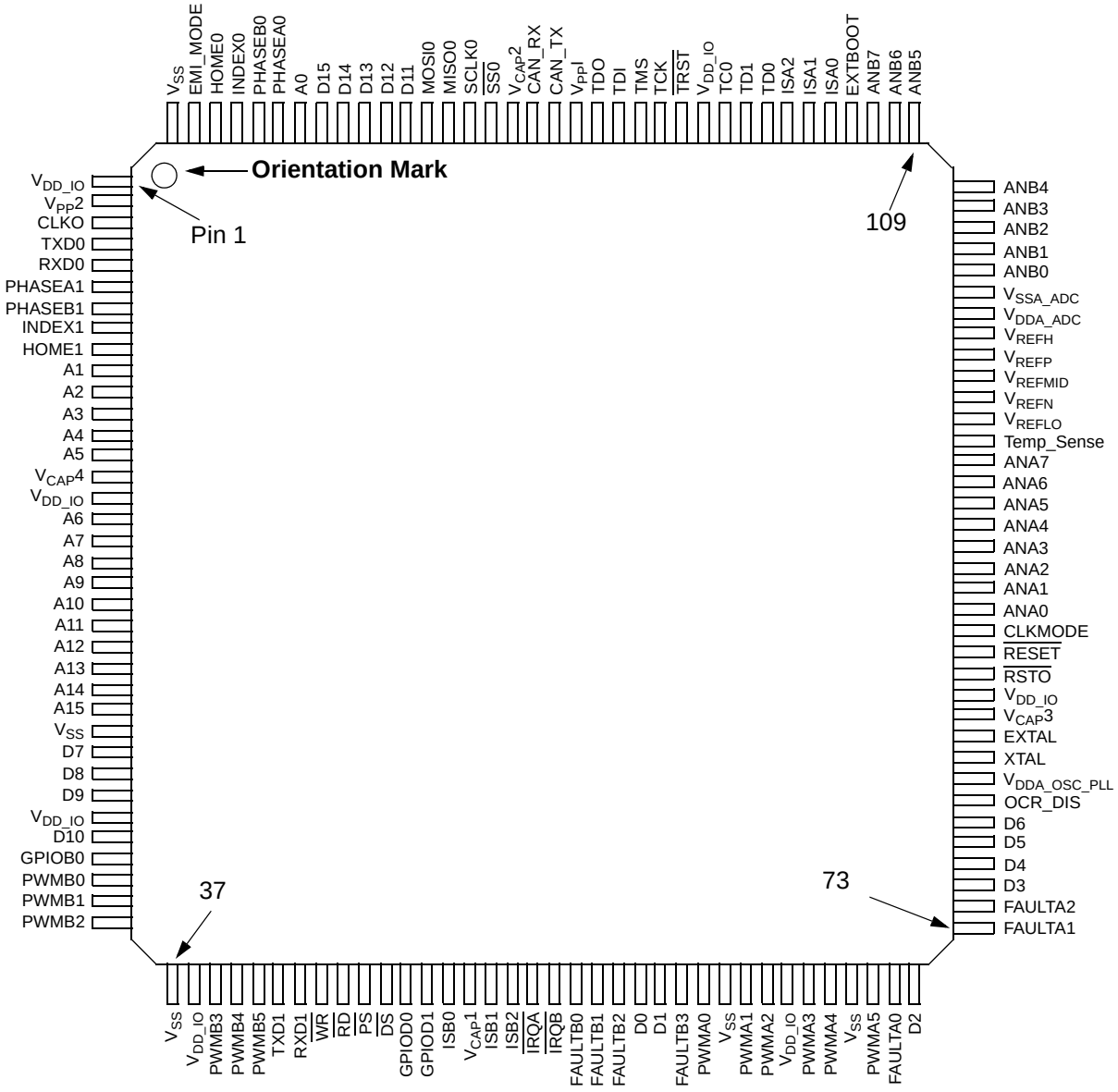

Figure 11-1 Top View, 56F8346 144-Pin LQFP Package

Table 11-1 56F8346 144-Pin LQFP Package Identification by Pin Number

Pin No.	Signal Name	Pin No.	Signal Name	Pin No.	Signal Name	Pin No.	Signal Name
1	V_{DD_IO}	37	V_{SS}	73	FAULTA1	109	ANB5
2	$V_{PP}2$	38	V_{DD_IO}	74	FAULTA2	110	ANB6
3	CLKO	39	PWMB3	75	D3	111	ANB7
4	TXD0	40	PWMB4	76	D4	112	EXTBOOT
5	RXD0	41	PWMB5	77	D5	113	ISA0
6	PHASEA1	42	TXD1	78	D6	114	ISA1
7	PHASEB1	43	RXD1	79	OCR_DIS	115	ISA2
8	INDEX1	44	$\overline{WR}$	80	$V_{DDA_OSC_PLL}$	116	TD0
9	HOME1	45	$\overline{RD}$	81	XTAL	117	TD1
10	A1	46	$\overline{PS}$	82	EXTAL	118	TC0
11	A2	47	$\overline{DS}$	83	$V_{CAP}3$	119	V_{DD_IO}
12	A3	48	GPIOD0	84	V_{DD_IO}	120	$\overline{TRST}$
13	A4	49	GPIOD1	85	$\overline{RSTO}$	121	TCK
14	A5	50	ISB0	86	$\overline{RESET}$	122	TMS
15	$V_{CAP}4$	51	$V_{CAP}1$	87	CLKMODE	123	TDI
16	V_{DD_IO}	52	ISB1	88	ANA0	124	TDO
17	A6	53	ISB2	89	ANA1	125	$V_{PP}1$
18	A7	54	$\overline{IRQA}$	90	ANA2	126	CAN_TX
19	A8	55	$\overline{IRQB}$	91	ANA3	127	CAN_RX
20	A9	56	FAULTB0	92	ANA4	128	$V_{CAP}2$
21	A10	57	FAULTB1	93	ANA5	129	$\overline{SS0}$
22	A11	58	FAULTB2	94	ANA6	130	SCLK0
23	A12	59	D0	95	ANA7	131	MISO0
24	A13	60	D1	96	TEMP_SENSE	132	MOSI0
25	A14	61	FAULTB3	97	V_{REFLO}	133	D11
26	A15	62	PWMA0	98	V_{REFN}	134	D12

Table 11-1 56F8346 144-Pin LQFP Package Identification by Pin Number (Continued)

Pin No.	Signal Name	Pin No.	Signal Name	Pin No.	Signal Name	Pin No.	Signal Name
27	V_{SS}	63	V_{SS}	99	V_{REFMID}	135	D13
28	D7	64	PWMA1	100	V_{REFP}	136	D14
29	D8	65	PWMA2	101	V_{REFH}	137	D15
30	D9	66	V_{DD_IO}	102	V_{DDA_ADC}	138	A0
31	V_{DD_IO}	67	PWMA3	103	V_{SSA_ADC}	139	PHASEA0
32	D10	68	PWMA4	104	ANB0	140	PHASEB0
33	GPIOB0	69	V_{SS}	105	ANB1	141	INDEX0
34	PWMB0	70	PWMA5	106	ANB2	142	HOME0
35	PWMB1	71	FAULTA0	107	ANB3	143	EMI_MODE
36	PWMB2	72	D2	108	ANB4	144	V_{SS}

11.2 56F8146 Package and Pin-Out Information

This section contains package and pin-out information for the 56F8146. This device comes in a 144-pin Low-profile Quad Flat Pack (LQFP). **Figure 11-1** shows the package outline for the LQFP**;** **Figure 11-3** shows the mechanical parameters for this package, and **Table 11-1** lists the pin-out for the 144-pin LQFP.

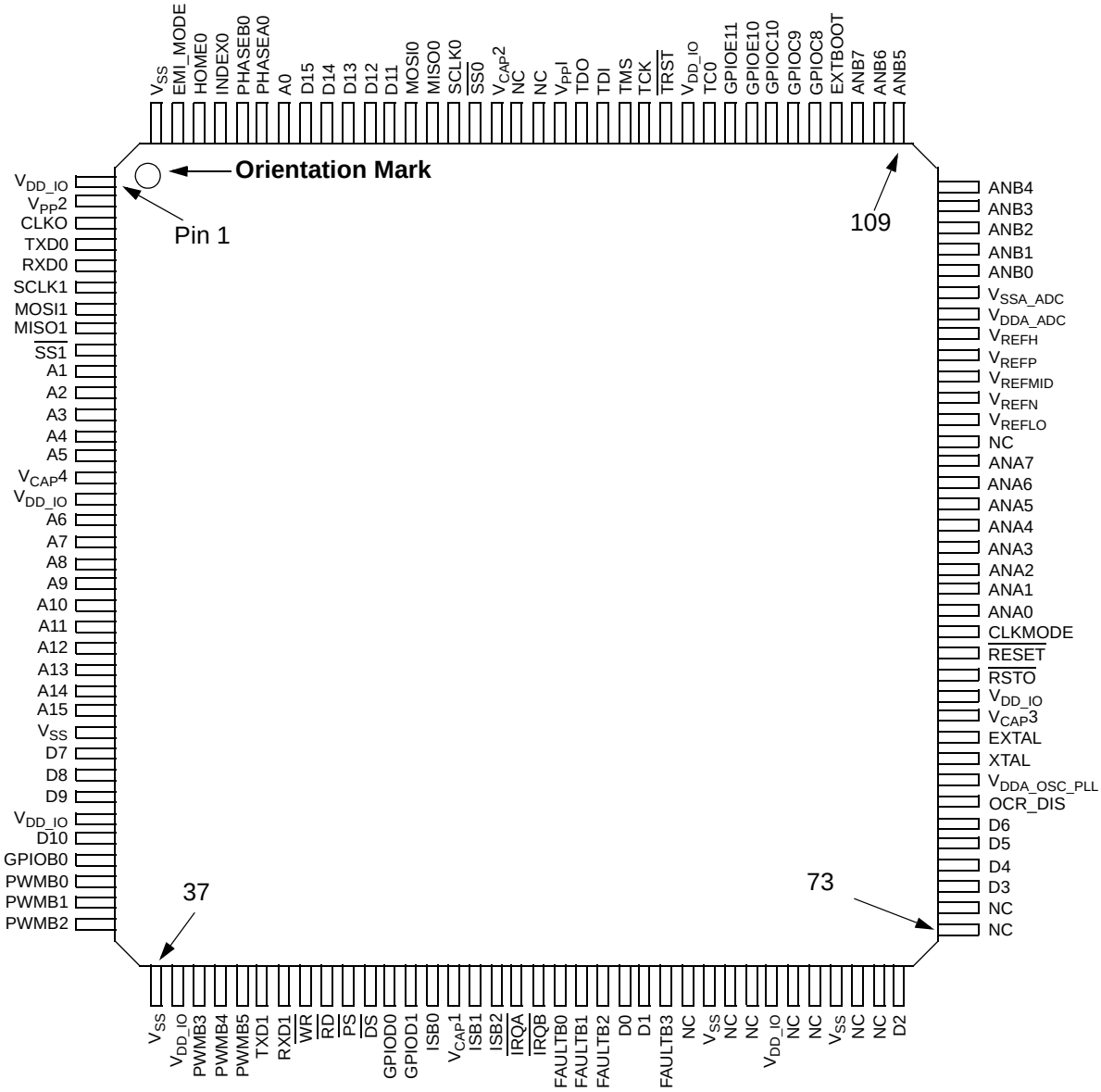

Figure 11-2 Top View, 56F8146 144-Pin LQFP Package

Table 11-2 56F8146 144-Pin LQFP Package Identification by Pin Number

Pin No.	Signal Name	Pin No.	Signal Name	Pin No.	Signal Name	Pin No.	Signal Name
1	V_{DD_IO}	37	V_{SS}	73	NC	109	ANB5

Table 11-2 56F8146 144-Pin LQFP Package Identification by Pin Number (Continued)

Pin No.	Signal Name	Pin No.	Signal Name	Pin No.	Signal Name	Pin No.	Signal Name
2	$V_{PP}2$	38	V_{DD_IO}	74	NC	110	ANB6
3	CLKO	39	PWMB3	75	D3	111	ANB7
4	TXD0	40	PWMB4	76	D4	112	EXTBOOT
5	RXD0	41	PWMB5	77	D5	113	GPIOC8
6	SCLK1	42	TXD1	78	D6	114	GPIOC9
7	MOSI1	43	RXD1	79	OCR_DIS	115	GPIOC10
8	MISO1	44	$\overline{WR}$	80	$V_{DDA_OSC_PLL}$	116	GPIOE10
9	$\overline{SS1}$	45	$\overline{RD}$	81	XTAL	117	GPIOE11
10	A1	46	$\overline{PS}$	82	EXTAL	118	TC0
11	A2	47	$\overline{DS}$	83	$V_{CAP}3$	119	V_{DD_IO}
12	A3	48	GPIOD0	84	V_{DD_IO}	120	$\overline{TRST}$
13	A4	49	GPIOD1	85	$\overline{RSTO}$	121	TCK
14	A5	50	ISB0	86	$\overline{RESET}$	122	TMS
15	$V_{CAP}4$	51	$V_{CAP}1$	87	CLKMODE	123	TDI
16	V_{DD_IO}	52	ISB1	88	ANA0	124	TDO
17	A6	53	ISB2	89	ANA1	125	$V_{PP}1$
18	A7	54	$\overline{IRQA}$	90	ANA2	126	NC
19	A8	55	$\overline{IRQB}$	91	ANA3	127	NC
20	A9	56	FAULTB0	92	ANA4	128	$V_{CAP}2$
21	A10	57	FAULTB1	93	ANA5	129	$\overline{SS0}$
22	A11	58	FAULTB2	94	ANA6	130	SCLK0
23	A12	59	D0	95	ANA7	131	MISO0
24	A13	60	D1	96	NC	132	MOSI0
25	A14	61	FAULTB3	97	V_{REFLO}	133	D11

Table 11-2 56F8146 144-Pin LQFP Package Identification by Pin Number (Continued)

Pin No.	Signal Name	Pin No.	Signal Name	Pin No.	Signal Name	Pin No.	Signal Name
26	A15	62	NC	98	V_{REFN}	134	D12
27	V_{SS}	63	V_{SS}	99	V_{REFMID}	135	D13
28	D7	64	NC	100	V_{REFP}	136	D14
29	D8	65	NC	101	V_{REFH}	137	D15
30	D9	66	V_{DD_IO}	102	V_{DDA_ADC}	138	A0
31	V_{DD_IO}	67	NC	103	V_{SSA_ADC}	139	PHASEA0
32	D10	68	NC	104	ANB0	140	PHASEB0
33	GPIOB0	69	V_{SS}	105	ANB1	141	INDEX0
34	PWMB0	70	NC	106	ANB2	142	HOME0
35	PWMB1	71	NC	107	ANB3	143	EMI_MODE
36	PWMB2	72	D2	108	ANB4	144	V_{SS}

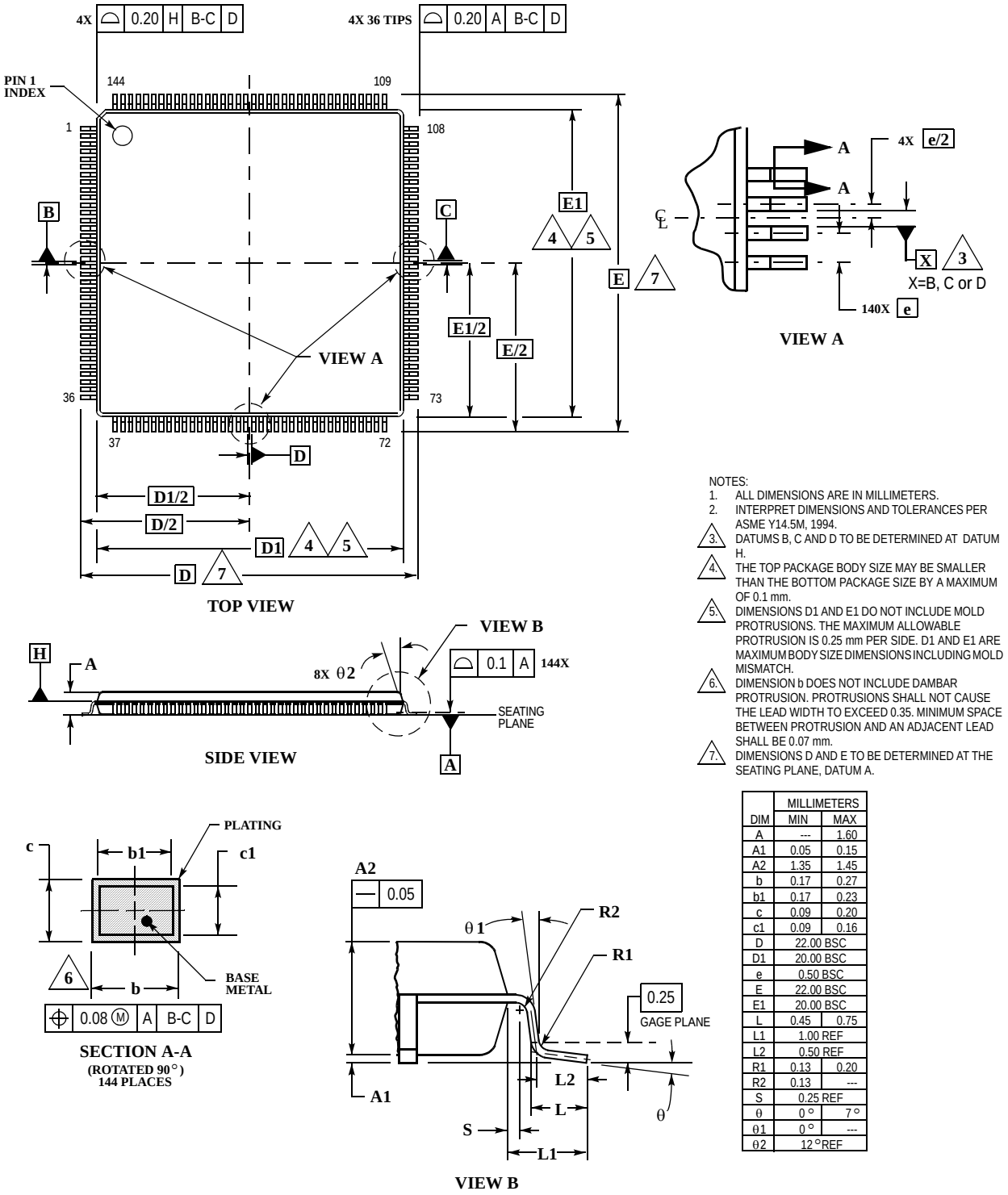

NOTES:
1. ALL DIMENSIONS ARE IN MILLIMETERS.
2. INTERPRET DIMENSIONS AND TOLERANCES PER ASME Y14.5M, 1994.
3. DATUMS B, C AND D TO BE DETERMINED AT DATUM H.
4. THE TOP PACKAGE BODY SIZE MAY BE SMALLER THAN THE BOTTOM PACKAGE SIZE BY A MAXIMUM OF 0.1 mm.
5. DIMENSIONS D1 AND E1 DO NOT INCLUDE MOLD PROTRUSIONS. THE MAXIMUM ALLOWABLE PROTRUSION IS 0.25 mm PER SIDE. D1 AND E1 ARE MAXIMUM BODY SIZE DIMENSIONS INCLUDING MOLD MISMATCH.
6. DIMENSION b DOES NOT INCLUDE DAMBAR PROTRUSION. PROTRUSIONS SHALL NOT CAUSE THE LEAD WIDTH TO EXCEED 0.35. MINIMUM SPACE BETWEEN PROTRUSION AND AN ADJACENT LEAD SHALL BE 0.07 mm.
7. DIMENSIONS D AND E TO BE DETERMINED AT THE SEATING PLANE, DATUM A.

DIM	MILLIMETERS MIN	MAX
A	---	1.60
A1	0.05	0.15
A2	1.35	1.45
b	0.17	0.27
b1	0.17	0.23
c	0.09	0.20
c1	0.09	0.16
D	22.00 BSC	
D1	20.00 BSC	
e	0.50 BSC	
E	22.00 BSC	
E1	20.00 BSC	
L	0.45	0.75
L1	1.00 REF	
L2	0.50 REF	
R1	0.13	0.20
R2	0.13	---
S	0.25 REF	
θ	0°	7°
θ1	0°	---
θ2	12° REF	

Figure 11-3 144-pin LQFP Mechanical Information

Please see **www.freescale.com** for the most current case outline.

Part 12 Design Considerations

12.1 Thermal Design Considerations

An estimation of the chip junction temperature, T_J, can be obtained from the equation:

$T_J = T_A + (R_{\theta JA} \times P_D)$

where:

T_A = Ambient temperature for the package (^oC)
$R_{\theta JA}$ = Junction-to-ambient thermal resistance ($^oC/W$)
P_D = Power dissipation in the package (W)

The junction-to-ambient thermal resistance is an industry-standard value that provides a quick and easy estimation of thermal performance. Unfortunately, there are two values in common usage: the value determined on a single-layer board and the value obtained on a board with two planes. For packages such as the PBGA, these values can be different by a factor of two. Which value is closer to the application depends on the power dissipated by other components on the board. The value obtained on a single-layer board is appropriate for the tightly packed printed circuit board. The value obtained on the board with the internal planes is usually appropriate if the board has low-power dissipation and the components are well separated.

When a heat sink is used, the thermal resistance is expressed as the sum of a junction-to-case thermal resistance and a case-to-ambient thermal resistance:

$R_{\theta JA} = R_{\theta JC} + R_{\theta CA}$

where:

$R_{\theta JA}$ = Package junction-to-ambient thermal resistance °C/W
$R_{\theta JC}$ = Package junction-to-case thermal resistance °C/W
$R_{\theta CA}$ = Package case-to-ambient thermal resistance °C/W

$R_{\theta JC}$ is device-related and cannot be influenced by the user. The user controls the thermal environment to change the case-to-ambient thermal resistance, $R_{\theta CA}$. For instance, the user can change the size of the heat sink, the air flow around the device, the interface material, the mounting arrangement on printed circuit board, or change the thermal dissipation on the printed circuit board surrounding the device.

To determine the junction temperature of the device in the application when heat sinks are not used, the Thermal Characterization Parameter (Ψ_{JT}) can be used to determine the junction temperature with a measurement of the temperature at the top center of the package case using the following equation:

$T_J = T_T + (\Psi_{JT} \times P_D)$

where:

T_T = Thermocouple temperature on top of package (^oC)
Ψ_{JT} = Thermal characterization parameter (^oC)/W
P_D = Power dissipation in package (W)

The thermal characterization parameter is measured per JESD51-2 specification using a 40-gauge type T thermocouple epoxied to the top center of the package case. The thermocouple should be positioned so that the thermocouple junction rests on the package. A small amount of epoxy is placed over the thermocouple junction and over about 1mm of wire extending from the junction. The thermocouple wire is placed flat against the package case to avoid measurement errors caused by cooling effects of the thermocouple wire.

When heat sink is used, the junction temperature is determined from a thermocouple inserted at the interface between the case of the package and the interface material. A clearance slot or hole is normally required in the heat sink. Minimizing the size of the clearance is important to minimize the change in thermal performance caused by removing part of the thermal interface to the heat sink. Because of the experimental difficulties with this technique, many engineers measure the heat sink temperature and then back-calculate the case temperature using a separate measurement of the thermal resistance of the interface. From this case temperature, the junction temperature is determined from the junction-to-case thermal resistance.

12.2 Electrical Design Considerations

CAUTION

This device contains protective circuitry to guard against damage due to high static voltage or electrical fields. However, normal precautions are advised to avoid application of any voltages higher than maximum-rated voltages to this high-impedance circuit. Reliability of operation is enhanced if unused inputs are tied to an appropriate voltage level.

Use the following list of considerations to assure correct device operation:

- Provide a low-impedance path from the board power supply to each V_{DD} pin on the device, and from the board ground to each V_{SS} (GND) pin
- The minimum bypass requirement is to place six 0.01–0.1µF capacitors positioned as close as possible to the package supply pins. The recommended bypass configuration is to place one bypass capacitor on each of the V_{DD}/V_{SS} pairs, including $V_{DDA}/V_{SSA.}$ Ceramic and tantalum capacitors tend to provide better performance tolerances.

- Ensure that capacitor leads and associated printed circuit traces that connect to the chip V_{DD} and V_{SS} (GND) pins are less than 0.5 inch per capacitor lead
- Use at least a four-layer Printed Circuit Board (PCB) with two inner layers for V_{DD} and V_{SS}
- Bypass the V_{DD} and V_{SS} layers of the PCB with approximately 100 µF, preferably with a high-grade capacitor such as a tantalum capacitor
- Because the device's output signals have fast rise and fall times, PCB trace lengths should be minimal
- Consider all device loads as well as parasitic capacitance due to PCB traces when calculating capacitance. This is especially critical in systems with higher capacitive loads that could create higher transient currents in the V_{DD} and V_{SS} circuits.
- Take special care to minimize noise levels on the V_{REF}, V_{DDA} and V_{SSA} pins
- Designs that utilize the $\overline{\text{TRST}}$ pin for JTAG port or EOnCE module functionality (such as development or debugging systems) should allow a means to assert $\overline{\text{TRST}}$ whenever $\overline{\text{RESET}}$ is asserted, as well as a means to assert $\overline{\text{TRST}}$ independently of $\overline{\text{RESET}}$. Designs that do not require debugging functionality, such as consumer products, should tie these pins together.
- Because the Flash memory is programmed through the JTAG/EOnCE port, the designer should provide an interface to this port to allow in-circuit Flash programming

12.3 Power Distribution and I/O Ring Implementation

Figure 12-1 illustrates the general power control incorporated in the 56F8346/56F8146. This chip contains two internal power regulators. One of them is powered from the $V_{DDA_OSC_PLL}$ pin and cannot be turned off. This regulator controls power to the internal clock generation circuitry. The other regulator is powered from the V_{DD_IO} pins and provides power to all of the internal digital logic of the core, all peripherals and the internal memories. This regulator can be turned off, if an external V_{DD_CORE} voltage is externally applied to the V_{CAP} pins.

In summary, the entire chip can be supplied from a single 3.3 volt supply if the large core regulator is enabled. If the regulator is not enabled, a dual supply 3.3V/2.5V configuration can also be used.

Notes:

- Flash, RAM and internal logic are powered from the core regulator output
- $V_{PP}1$ and $V_{PP}2$ are not connected in the customer system
- All circuitry, analog *and* digital, shares a common V_{SS} bus

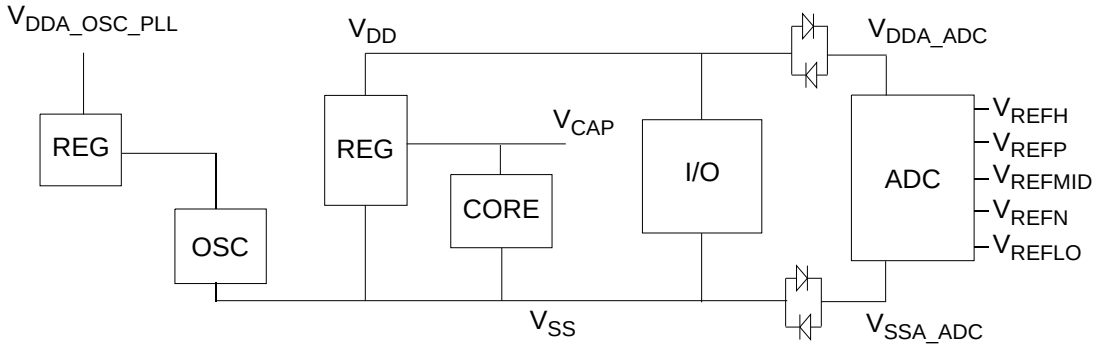

Figure 12-1 Power Management

Part 13 Ordering Information

Table 13-1 lists the pertinent information needed to place an order. Consult a Freescale Semiconductor sales office or authorized distributor to determine availability and to order parts.

Table 13-1 Ordering Information

Part	Supply Voltage	Package Type	Pin Count	Frequency (MHz)	Ambient Temperature Range	Order Number
MC56F8346	3.0–3.6V	Low-Profile Quad Flat Pack (LQFP)	144	60	-40° to + 105° C	MC56F8346VFV60
MC56F8346	3.0–3.6V	Low-Profile Quad Flat Pack (LQFP)	144	60	-40° to + 125° C	MC56F8346MFV60
MC56F8146	3.0–3.6V	Low-Profile Quad Flat Pack (LQFP)	144	40	-40° to + 105° C	MC56F8146VFV
MC56F8346	3.0–3.6V	Low-Profile Quad Flat Pack (LQFP)	144	60	-40° to + 105° C	MC56F8346VFVE*
MC56F8346	3.0–3.6V	Low-Profile Quad Flat Pack (LQFP)	144	60	-40° to + 125° C	MC56F8346MFVE*
MC56F8146	3.0–3.6V	Low-Profile Quad Flat Pack (LQFP)	144	40	-40° to + 105° C	MC56F8146VFVE*

*This package is RoHS compliant.

How to Reach Us:

Home Page:
www.freescale.com

E-mail:
support@freescale.com

USA/Europe or Locations Not Listed:
Freescale Semiconductor
Technical Information Center, CH370
1300 N. Alma School Road
Chandler, Arizona 85224
+1-800-521-6274 or +1-480-768-2130
support@freescale.com

Europe, Middle East, and Africa:
Freescale Halbleiter Deutschland GmbH
Technical Information Center
Schatzbogen 7
81829 Muenchen, Germany
+44 1296 380 456 (English)
+46 8 52200080 (English)
+49 89 92103 559 (German)
+33 1 69 35 48 48 (French)
support@freescale.com

Japan:
Freescale Semiconductor Japan Ltd.
Headquarters
ARCO Tower 15F
1-8-1, Shimo-Meguro, Meguro-ku,
Tokyo 153-0064, Japan
0120 191014 or +81 3 5437 9125
support.japan@freescale.com

Asia/Pacific:
Freescale Semiconductor Hong Kong Ltd.
Technical Information Center
2 Dai King Street
Tai Po Industrial Estate
Tai Po, N.T., Hong Kong
+800 2666 8080
support.asia@freescale.com

For Literature Requests Only:
Freescale Semiconductor Literature Distribution Center
P.O. Box 5405
Denver, Colorado 80217
1-800-441-2447 or 303-675-2140
Fax: 303-675-2150
LDCForFreescaleSemiconductor@hibbertgroup.com

RoHS-compliant and/or Pb-free versions of Freescale products have the functionality and electrical characteristics of their non-RoHS-compliant and/or non-Pb-free counterparts. For further information, see http://www.freescale.com or contact your Freescale sales representative.

For information on Freescale's Environmental Products program, go to http://www.freescale.com/epp.

Information in this document is provided solely to enable system and software implementers to use Freescale Semiconductor products. There are no express or implied copyright licenses granted hereunder to design or fabricate any integrated circuits or integrated circuits based on the information in this document.

Freescale Semiconductor reserves the right to make changes without further notice to any products herein. Freescale Semiconductor makes no warranty, representation or guarantee regarding the suitability of its products for any particular purpose, nor does Freescale Semiconductor assume any liability arising out of the application or use of any product or circuit, and specifically disclaims any and all liability, including without limitation consequential or incidental damages. "Typical" parameters that may be provided in Freescale Semiconductor data sheets and/or specifications can and do vary in different applications and actual performance may vary over time. All operating parameters, including "Typicals", must be validated for each customer application by customer's technical experts. Freescale Semiconductor does not convey any license under its patent rights nor the rights of others. Freescale Semiconductor products are not designed, intended, or authorized for use as components in systems intended for surgical implant into the body, or other applications intended to support or sustain life, or for any other application in which the failure of the Freescale Semiconductor product could create a situation where personal injury or death may occur. Should Buyer purchase or use Freescale Semiconductor products for any such unintended or unauthorized application, Buyer shall indemnify and hold Freescale Semiconductor and its officers, employees, subsidiaries, affiliates, and distributors harmless against all claims, costs, damages, and expenses, and reasonable attorney fees arising out of, directly or indirectly, any claim of personal injury or death associated with such unintended or unauthorized use, even if such claim alleges that Freescale Semiconductor was negligent regarding the design or manufacture of the part.

Freescale™ and the Freescale logo are trademarks of Freescale Semiconductor, Inc. All other product or service names are the property of their respective owners. This product incorporates SuperFlash® technology licensed from SST.

© Freescale Semiconductor, Inc. 2005, 2006. All rights reserved.

MC56F8346
Rev. 15
01/2007

Стандарт Электрон Связь

Мы молодая и активно развивающаяся компания в области поставок электронных компонентов. Мы поставляем электронные компоненты отечественного и импортного производства напрямую от производителей и с крупнейших складов мира.

Благодаря сотрудничеству с мировыми поставщиками мы осуществляем комплексные и плановые поставки широчайшего спектра электронных компонентов.

Собственная эффективная логистика и склад в обеспечивает надежную поставку продукции в точно указанные сроки по всей России.

Мы осуществляем техническую поддержку нашим клиентам и предпродажную проверку качества продукции. На все поставляемые продукты мы предоставляем гарантию .

Осуществляем поставки продукции под контролем ВП МО РФ на предприятия военно-промышленного комплекса России , а также работаем в рамках 275 ФЗ с открытием отдельных счетов в уполномоченном банке. Система менеджмента качества компании соответствует требованиям ГОСТ ISO 9001.

Минимальные сроки поставки, гибкие цены, неограниченный ассортимент и индивидуальный подход к клиентам являются основой для выстраивания долгосрочного и эффективного сотрудничества с предприятиями радиоэлектронной промышленности, предприятиями ВПК и научно-исследовательскими институтами России.

С нами вы становитесь еще успешнее!

Наши контакты:

Телефон: +7 812 627 14 35

Электронная почта: sales@st-electron.ru

Адрес: 198099, Санкт-Петербург,
Промышленная ул, дом № 19, литера Н,
помещение 100-Н Офис 331