Octal, 12-Bit + Sign, 1.5Msps/Ch Simultaneous Sampling ADC

FEATURES

- **1.5Msps/Ch Throughput Rate**
- **Eight Simultaneously Sampling Channels**
- **Guaranteed 12-Bit, No Missing Codes**
- **$8V_{P-P}$ Differential Inputs with Wide Input Common Mode Range**
- **77dB SNR (Typ) at f_{IN} = 500kHz**
- **–90dB THD (Typ) at f_{IN} = 500kHz**
- Guaranteed Operation to 125°C
- Single 3.3V or 5V Supply
- Low Drift (20ppm/°C Max) 2.048V or 4.096V Internal Reference
- 1.8V to 2.5V I/O Voltages
- CMOS or LVDS SPI-Compatible Serial I/O
- Power Dissipation 20mW/Ch (Typ)
- Small 52-Lead (7mm × 8mm) QFN Package

APPLICATIONS

- High Speed Data Acquisition Systems
- Communications
- Remote Data Acquisition
- Imaging
- Optical Networking
- Automotive
- Multiphase Motor Control

DESCRIPTION

The LTC®2320-12 is a low noise, high speed octal 12-bit + sign successive approximation register (SAR) ADC with differential inputs and wide input common mode range. Operating from a single 3.3V or 5V supply, the LTC2320-12 has an $8V_{P-P}$ differential input range, making it ideal for applications which require a wide dynamic range with high common mode rejection. The LTC2320-12 achieves ±0.25LSB INL typical, no missing codes at 12 bits and 77dB SNR.

The LTC2320-12 has an onboard low drift (20ppm/°C max) 2.048V or 4.096V temperature-compensated reference. The LTC2320-12 also has a high speed SPI-compatible serial interface that supports CMOS or LVDS. The fast 1.5Msps per channel throughput with no latency makes the LTC2320-12 ideally suited for a wide variety of high speed applications. The LTC2320-12 dissipates only 20mW per channel and offers nap and sleep modes to reduce the power consumption to 26µW for further power savings during inactive periods.

All registered trademarks and trademarks are the property of their respective owners.

TYPICAL APPLICATION

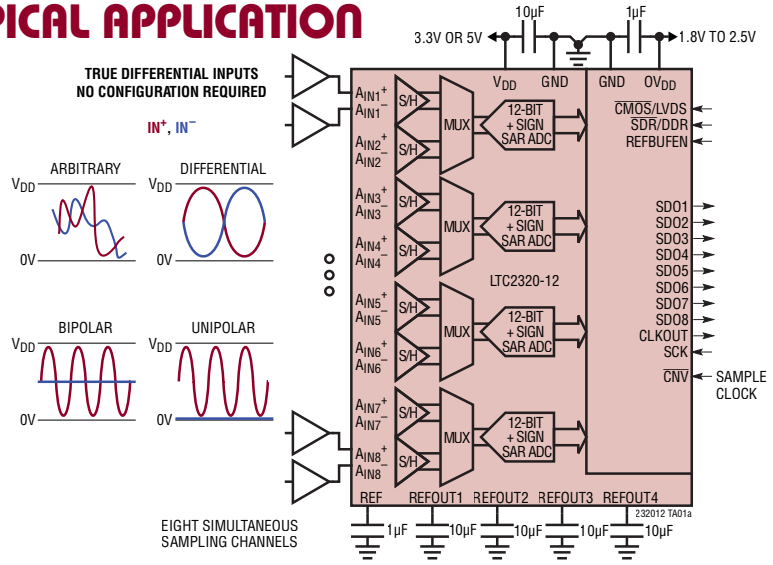

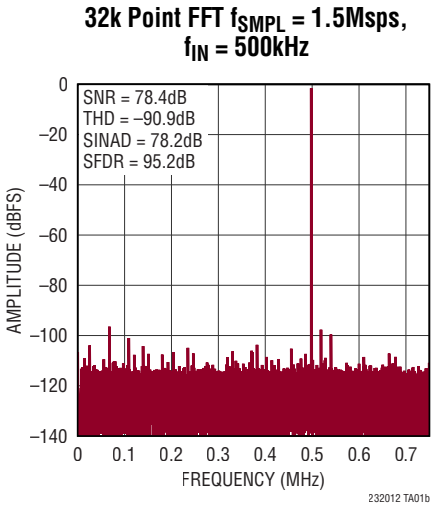

Rev B

ABSOLUTE MAXIMUM RATINGS

(Notes 1, 2)

Supply Voltage (V_{DD}) 6V
Supply Voltage (OV_{DD}) 3V
Analog Input Voltage
  A_{IN}^+, A_{IN}^- (Note 3) ..... –0.3V to (V_{DD} + 0.3V)
  REFOUT1,2,3,4..... .–0.3V to (V_{DD} + 0.3V)
  $\overline{CNV}$.....–0.3V to (OV_{DD} + 0.3V)
Digital Input Voltage
(Note 3)..... (GND – 0.3V) to (OV_{DD} + 0.3V)
Digital Output Voltage
(Note 3)..... (GND – 0.3V) to (OV_{DD} + 0.3V)
Operating Temperature Range
  LTC2320C ..... 0°C to 70°C
  LTC2320I .....–40°C to 85°C
  LTC2320H.....–40°C to 125°C
Storage Temperature Range .....–65°C to 150°C

PIN CONFIGURATION

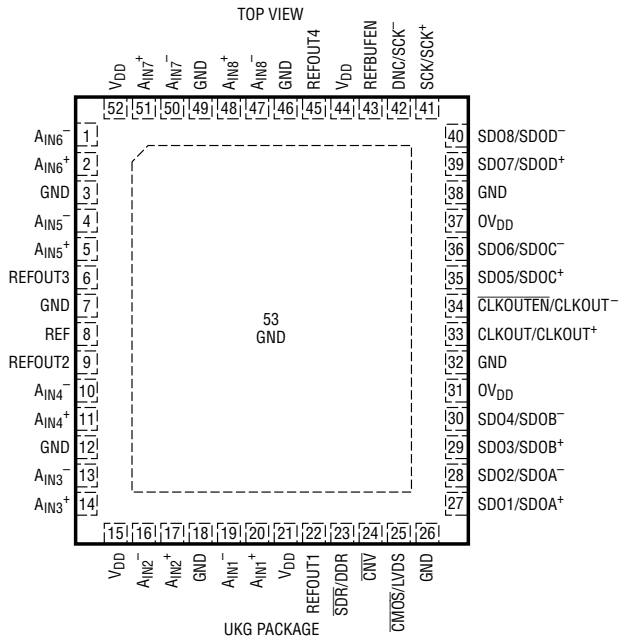

UKG PACKAGE
52-LEAD (7mm × 8mm) PLASTIC QFN
T_{JMAX} = 150°C, θ_{JA} = 31°C/W
EXPOSED PAD (PIN 53) IS GND, MUST BE SOLDERED TO PCB

ORDER INFORMATION

http://www.linear.com/product/LTC2320-12#orderinfo

LEAD FREE FINISH	TAPE AND REEL	PART MARKING*	PACKAGE DESCRIPTION	TEMPERATURE RANGE
LTC2320CUKG-12#PBF	LTC2320CUKG-12#TRPBF	LTC2320UKG-12	52-Lead (7mm × 8mm) Plastic QFN	0°C to 70°C
LTC2320IUKG-12#PBF	LTC2320IUKG-12#TRPBF	LTC2320UKG-12	52-Lead (7mm × 8mm) Plastic QFN	–40°C to 85°C
LTC2320HUKG-12#PBF	LTC2320HUKG-12#TRPBF	LTC2320UKG-12	52-Lead (7mm × 8mm) Plastic QFN	–40°C to 125°C

Consult ADI Marketing for parts specified with wider operating temperature ranges. *The temperature grade is identified by a label on the shipping container.

For more information on lead free part marking, go to: http://www.linear.com/leadfree/
For more information on tape and reel specifications, go to: http://www.linear.com/tapeandreel/. Some packages are available in 500 unit reels through designated sales channels with #TRMPBF suffix.

ELECTRICAL CHARACTERISTICS

The ● denotes the specifications which apply over the full operating temperature range, otherwise specifications are at T_A = 25°C (Note 4).

SYMBOL	PARAMETER	CONDITIONS		MIN	TYP	MAX	UNITS
V_{IN}^+	Absolute Input Range (A_{IN}^+ to A_{IN}^-)	(Note 5)	●	0		V_{DD}	V
V_{IN}^-	Absolute Input Range (A_{IN}^+ to A_{IN}^-)	(Note 5)	●	0		V_{DD}	V
$V_{IN}^+ – V_{IN}^-$	Input Differential Voltage Range	$V_{IN} = V_{IN}^+ – V_{IN}^-$	●	–REFOUT1,2,3,4		REFOUT1,2,3,4	V
V_{CM}	Common Mode Input Range	$V_{CM} = (V_{IN}^+ – V_{IN}^-)/2$	●	0		V_{DD}	V
I_{IN}	Analog Input DC Leakage Current		●	–1		1	µA
C_{IN}	Analog Input Capacitance				10		pF
CMRR	Input Common Mode Rejection Ratio	f_{IN} = 500kHz			102		dB
V_{IHCNV}	$\overline{CNV}$ High Level Input Voltage		●	1.5			V
V_{ILCNV}	$\overline{CNV}$ Low Level Input Voltage		●			0.5	V
I_{INCNV}	$\overline{CNV}$ Input Current		●	–10		10	µA

CONVERTER CHARACTERISTICS

The ● denotes the specifications which apply over the full operating temperature range, otherwise specifications are at T_A = 25°C (Note 4).

SYMBOL	PARAMETER	CONDITIONS		MIN	TYP	MAX	UNITS
	Resolution		●	12			Bits
	No Missing Codes		●	12			Bits
	Transition Noise				0.2		LSB_{RMS}
INL	Integral Linearity Error	(Note 6)	●	–1	±0.25	1	LSB
DNL	Differential Linearity Error		●	–0.99	±0.4	0.99	LSB
BZE	Bipolar Zero-Scale Error	(Note 7)	●	–1.5	0	1.5	LSB
	Bipolar Zero-Scale Error Drift				0.005		LSB/°C
FSE	Bipolar Full-Scale Error	$V_{REFOUT1,2,3,4}$ = 4.096V (REFBUFEN Grounded) (Note 7)	●	–3	0	3	LSB
	Bipolar Full-Scale Error Drift	$V_{REFOUT1,2,3,4}$ = 4.096V (REFBUFEN Grounded)			15		ppm/°C

DYNAMIC ACCURACY

The ● denotes the specifications which apply over the full operating temperature range, otherwise specifications are at T_A = 25°C and A_{IN} = –1dBFS (Notes 4, 8).

SYMBOL	PARAMETER	CONDITIONS		MIN	TYP	MAX	UNITS
SINAD	Signal-to-(Noise + Distortion) Ratio	f_{IN} = 500kHz, $V_{REFOUT1,2,3,4}$ = 4.096V, Internal Reference	●	74	77		dB
		f_{IN} = 500kHz, $V_{REFOUT1,2,3,4}$ = 5V, External Reference			77		dB
SNR	Signal-to-Noise Ratio	f_{IN} = 500kHz, $V_{REFOUT1,2,3,4}$ = 4.096V, Internal Reference	●	75	77		dB
		f_{IN} = 500kHz, $V_{REFOUT1,2,3,4}$ = 5V, External Reference			77.5		dB
THD	Total Harmonic Distortion	f_{IN} = 500kHz, $V_{REFOUT1,2,3,4}$ = 4.096V, Internal Reference	●		–90	–76	dB
		f_{IN} = 500kHz, $V_{REFOUT1,2,3,4}$ = 5V, External Reference			–91		dB
SFDR	Spurious Free Dynamic Range	f_{IN} = 500kHz, $V_{REFOUT1,2,3,4}$ = 4.096V, Internal Reference	●	76	93		dB
		f_{IN} = 500kHz, $V_{REFOUT1,2,3,4}$ = 5V, External Reference			93		dB
	–3dB Input Bandwidth				55		MHz
	Aperture Delay				500		ps
	Aperture Delay Matching				500		ps
	Aperture Jitter				1		ps_{RMS}
	Transient Response	Full-Scale Step			30		ns

INTERNAL REFERENCE CHARACTERISTICS

The ● denotes the specifications which apply over the full operating temperature range, otherwise specifications are at T_A = 25°C (Note 4).

SYMBOL	PARAMETER	CONDITIONS		MIN	TYP	MAX	UNITS
$V_{REFOUT1,2,3,4}$	Internal Reference Output Voltage	4.75V < V_{DD} < 5.25V 3.13V < V_{DD} < 3.47V	● ●	4.078 2.034	4.096 2.048	4.115 2.064	V V
	V_{REF} Temperature Coefficient	(Note 14)	●		3	20	ppm/°C
	REFOUT1,2,3,4 Output Impedance				0.25		Ω
	$V_{REFOUT1,2,3,4}$ Line Regulation	4.75V < V_{DD} < 5.25V			0.3		mV/V
$I_{REFOUT1,2,3,4}$	External Reference Current	REFBUFEN = 0V REFOUT1,2,3,4 = 4.096V REFOUT1,2,3,4 = 2.048V (Notes 9, 10)			 385 204		 µA µA

DIGITAL INPUTS AND DIGITAL OUTPUTS

The ● denotes the specifications which apply over the full operating temperature range, otherwise specifications are at T_A = 25°C (Note 4).

SYMBOL	PARAMETER	CONDITIONS		MIN	TYP	MAX	UNITS
CMOS Digital Inputs and Outputs		$\overline{CMOS}$/LVDS = GND					
V_{IH}	High Level Input Voltage		●	0.8 • OV_{DD}			V
V_{IL}	Low Level Input Voltage		●			0.2 • OV_{DD}	V
I_{IN}	Digital Input Current	V_{IN} = 0V to OV_{DD}	●	–10		10	µA
C_{IN}	Digital Input Capacitance		●		5		pF
V_{OH}	High Level Output Voltage	I_O = –500µA	●	OV_{DD} – 0.2			V
V_{OL}	Low Level Output Voltage	I_O = 500µA	●			0.2	V
I_{OZ}	Hi-Z Output Leakage Current	V_{OUT} = 0V to OV_{DD}	●	–10		10	µA
I_{SOURCE}	Output Source Current	V_{OUT} = 0V	●		–10		mA
I_{SINK}	Output Sink Current	V_{OUT} = OV_{DD}	●		10		mA
LVDS Digital Inputs and Outputs		$\overline{CMOS}$/LVDS = OV_{DD}					
V_{ID}	LVDS Differential Input Voltage	100Ω Differential Termination OV_{DD} = 2.5V	●	240		600	mV
V_{IS}	LVDS Common Mode Input Voltage	100Ω Differential Termination OV_{DD} = 2.5V	●	1		1.45	V
V_{OD}	LVDS Differential Output Voltage	100Ω Differential Termination OV_{DD} = 2.5V	●	220	350	600	mV
V_{OS}	LVDS Common Mode Output Voltage	100Ω Differential Termination OV_{DD} = 2.5V	●	0.85	1.2	1.4	V
V_{OD_LP}	Low Power LVDS Differential Output Voltage	100Ω Differential Termination OV_{DD} = 2.5V	●	100	200	350	mV
V_{OS_LP}	Low Power LVDS Common Mode Output Voltage	100Ω Differential Termination OV_{DD} = 2.5V	●	0.85	1.2	1.4	V

POWER REQUIREMENTS

The ● denotes the specifications which apply over the full operating temperature range, otherwise specifications are at T_A = 25°C (Note 4).

SYMBOL	PARAMETER	CONDITIONS		MIN	TYP	MAX	UNITS
V_{DD}	Supply Voltage	5V Operation 3.3V Operation	● ●	4.75 3.13		5.25 3.47	V V
IV_{DD}	Supply Current	1.5Msps Sample Rate ($IN^+ = IN^- = 0V$)	●		31	38	mA
CMOS I/O Mode	$\overline{CMOS}$/LVDS = GND						
OV_{DD}	Supply Voltage		●	1.71		2.63	V
I_{OVDD}	Supply Current	1.5Msps Sample Rate (C_L = 5pF)	●		4.4	7	mA
I_{NAP}	Nap Mode Current	Conversion Done (I_{VDD})	●		5.3	6.2	mA
I_{SLEEP}	Sleep Mode Current	Sleep Mode ($I_{VDD} + I_{OVDD}$)	●		20	110	µA
$P_{D_3.3V}$	Power Dissipation	V_{DD} = 3.3V, 1.5Msps Sample Rate Nap Mode Sleep Mode	● ● ●		102 18 20	130 26.6 355	mW mW µW
P_{D_5V}	Power Dissipation	V_{DD} = 5V, 1.5Msps Sample Rate Nap Mode Sleep Mode	● ● ●		162 27 30	208 31.2 525	mW mW µW
LVDS I/O Mode	$\overline{CMOS}$/LVDS = OV_{DD}, OV_{DD} = 2.5V						
OV_{DD}	Supply Voltage		●	2.37		2.63	V
I_{OVDD}	Supply Current	1.5Msps Sample Rate (C_L = 5pF, R_L = 100Ω)	●		26	34	mA
I_{NAP}	Nap Mode Current	Conversion Done (I_{VDD})	●		5.3	6.2	mA
I_{SLEEP}	Sleep Mode Current	Sleep Mode ($I_{VDD} + I_{OVDD}$)	●		20	110	µA
$P_{D_3.3V}$	Power Dissipation	V_{DD} = 3.3V, 1.5Msps Sample Rate Nap Mode Sleep Mode	● ● ●		151 52 80	196 60 355	mW mW µW
P_{D_5V}	Power Dissipation	V_{DD} = 5V, 1.5Msps Sample Rate Nap Mode Sleep Mode	● ● ●		214 51 30	275 68.5 525	mW mW µW

ADC TIMING CHARACTERISTICS

The ● denotes the specifications which apply over the full operating temperature range, otherwise specifications are at T_A = 25°C (Note 4).

SYMBOL	PARAMETER	CONDITIONS		MIN	TYP	MAX	UNITS
f_{SMPL}	Maximum Sampling Frequency		●			1.5	Msps
t_{CYC}	Time Between Conversions	(Note 11) $t_{CYC} = t_{CNVH} + t_{CONV} + t_{READOUT}$	●	0.667		1000	µs
t_{CONV}	Conversion Time		●			450	ns
t_{CNVH}	$\overline{CNV}$ High Time		●	30			ns
$t_{ACQUISITION}$	Sampling Aperture	(Note 11) $t_{ACQUISITION} = t_{CYC} - t_{CONV}$			215		ns
t_{WAKE}	REFOUT1,2,3,4 Wake-Up Time	$C_{REFOUT1,2,3,4}$ = 10µF			50		ms
CMOS I/O Mode, SDR		$\overline{CMOS}$/LVDS = GND, $\overline{SDR}$/ DDR = GND					
t_{SCK}	SCK Period	(Note 13)	●	9.1			ns
t_{SCKH}	SCK High Time		●	4.1			ns
t_{SCKL}	SCK Low Time		●	4.1			ns
t_{HSDO_SDR}	SDO Data Remains Valid Delay from CLKOUT↓	C_L = 5pF (Note 12)	●	0		1.5	ns
$t_{DSCKCLKOUT}$	SCK to CLKOUT Delay	(Note 12)	●	2		4.5	ns

ADC TIMING CHARACTERISTICS

The ● denotes the specifications which apply over the full operating temperature range, otherwise specifications are at T_A = 25°C (Note 4).

SYMBOL	PARAMETER	CONDITIONS		MIN	TYP	MAX	UNITS
$t_{DCNVSDOZ}$	Bus Relinquish Time After $\overline{CNV}$↑	(Note 11)	●			3	ns
$t_{DCNVSDOV}$	SDO Valid Delay from $\overline{CNV}$↓	(Note 11)	●			3	ns
$t_{DSCKHCNVH}$	SCK Delay Time to $\overline{CNV}$↑	(Note 11)	●	0			ns
CMOS I/O Mode, DDR		$\overline{CMOS}$/LVDS = GND, $\overline{SDR}$/ DDR = OV_{DD}					
t_{SCK}	SCK Period		●	18.2			ns
t_{SCKH}	SCK High Time		●	8.2			ns
t_{SCKL}	SCK Low Time		●	8.2			ns
t_{HSDO_DDR}	SDO Data Remains Valid Delay from CLKOUT↓	C_L = 5pF (Note 12)	●	0		1.5	ns
$t_{DSCKCLKOUT}$	SCK to CLKOUT Delay	(Note 12)	●	2		4.5	ns
$t_{DCNVSDOZ}$	Bus Relinquish Time After $\overline{CNV}$↑	(Note 11)	●			3	ns
$t_{DCNVSDOV}$	SDO Valid Delay from $\overline{CNV}$↓	(Note 11)	●			3	ns
$t_{DSCKHCNVH}$	SCK Delay Time to $\overline{CNV}$↑	(Note 11)	●	0			ns
LVDS I/O Mode, SDR		$\overline{CMOS}$/LVDS = OV_{DD}, $\overline{SDR}$/DDR = GND					
t_{SCK}	SCK Period		●	3.3			ns
t_{SCKH}	SCK High Time		●	1.5			ns
t_{SCKL}	SCK Low Time		●	1.5			ns
t_{HSDO_SDR}	SDO Data Remains Valid Delay from CLKOUT↓	C_L = 5pF OV_{DD} = 2.5V	●	0		1.5	ns
$t_{DSCKCLKOUT}$	SCK to CLKOUT Delay	OV_{DD} = 2.5V	●	2		4	ns
$t_{DSCKHCNVH}$	SCK Delay Time to $\overline{CNV}$↑	(Note 11)	●	0			ns
LVDS I/O Mode, DDR		$\overline{CMOS}$/LVDS = OV_{DD}, $\overline{SDR}$/DDR = OV_{DD}					
t_{SCK}	SCK Period		●	6.6			ns
t_{SCKH}	SCK High Time		●	3			ns
t_{SCKL}	SCK Low Time		●	3			ns
t_{HSDO_DDR}	SDO Data Remains Valid Delay from CLKOUT↓	C_L = 5pF OV_{DD} = 2.5V	●	0		1.5	ns
$t_{DSCKCLKOUT}$	SCK to CLKOUT Delay	OV_{DD} = 2.5V	●	2		4	ns
$t_{DSCKHCNVH}$	SCK Delay Time to $\overline{CNV}$↑	(Note 11)	●	0			ns

Note 1: Stresses beyond those listed under Absolute Maximum Ratings may cause permanent damage to the device. Exposure to any Absolute Maximum Rating condition for extended periods may affect device reliability and lifetime.

Note 2: All voltage values are with respect to ground.

Note 3: When these pin voltages are taken below ground, or above V_{DD} or OV_{DD}, they will be clamped by internal diodes. This product can handle input currents up to 100mA below ground, or above V_{DD} or OV_{DD}, without latch-up.

Note 4: V_{DD} = 5V, OV_{DD} = 2.5V, REFOUT1,2,3,4 = 4.096V, f_{SMPL} = 1.5MHz.

Note 5: Recommended operating conditions.

Note 6: Integral nonlinearity is defined as the deviation of a code from a straight line passing through the actual endpoints of the transfer curve. The deviation is measured from the center of the quantization band.

Note 7: Bipolar zero error is the offset voltage measured from –0.5LSB when the output code flickers between 0000 0000 0000 0 and 1111 1111 1111 1. Full-scale bipolar error is the worst-case of –FS or +FS untrimmed deviation from ideal first and last code transitions and includes the effect of offset error.

Note 8: All specifications in dB are referred to a full-scale ±4.096V input with REF = 4.096V.

Note 9: When REFOUT1,2,3,4 is overdriven, the internal reference buffer must be turned off by setting REFBUFEN = 0V.

Note 10: f_{SMPL} = 1.5MHz, $I_{REFOUT1,2,3,4}$ varies proportionally with sample rate.

Note 11: Guaranteed by design, not subject to test.

Note 12: Parameter tested and guaranteed at OV_{DD} = 1.71V and OV_{DD} = 2.5V.

Note 13: t_{SCK} of 9.1ns allows a shift clock frequency up to 105MHz for rising edge capture.

Note 14: Temperature coefficient is calculated by dividing the maximum change in output voltage by the specified temperature range.

Note 15: $\overline{CNV}$ is driven from a low jitter digital source, typically at OV_{DD} logic levels.

ADC TIMING CHARACTERISTICS

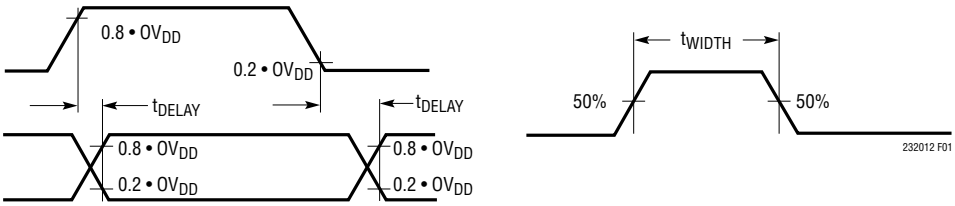

Figure 1. Voltage Levels for Timing Specifications

TYPICAL PERFORMANCE CHARACTERISTICS

T_A = 25°C, V_{DD} = 5V, OV_{DD} = 2.5V, REFOUT1,2,3,4 = 4.096V, f_{SMPL} = 1.5Msps, unless otherwise noted.

Integral Nonlinearity vs Output Code

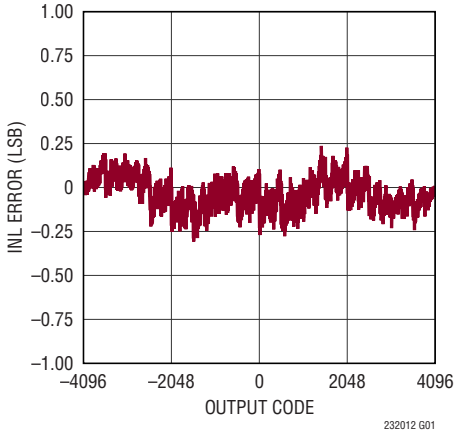

Differential Nonlinearity vs Output Code

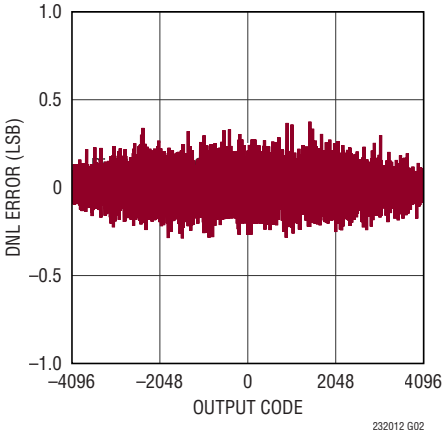

DC Histogram

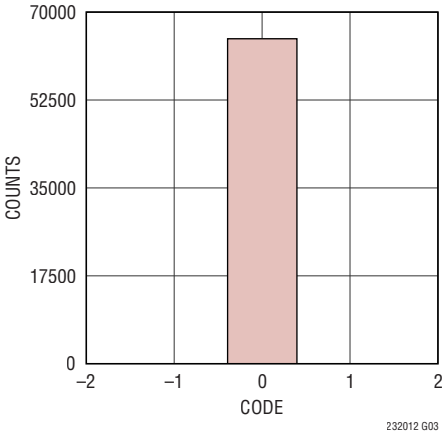

32k Point FFT, f_{SMPL} = 1.5Msps, f_{IN} = 500kHz

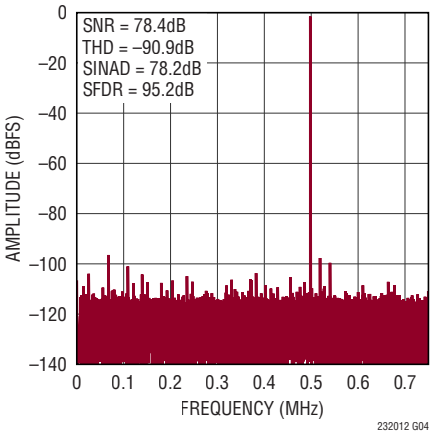

SNR, SINAD vs Input Frequency (1kHz to 750kHz)

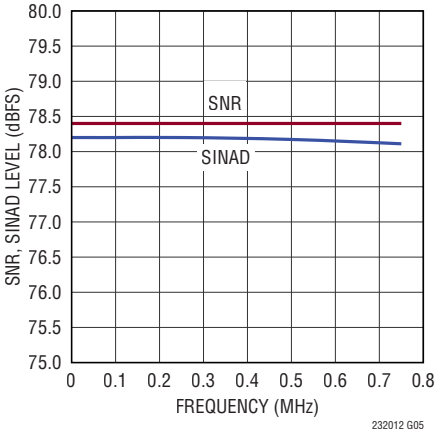

THD, Harmonics vs Input Frequency (1kHz to 750kHz)

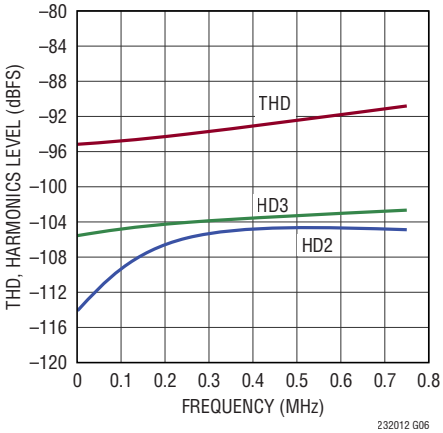

THD, Harmonics vs Input Common Mode

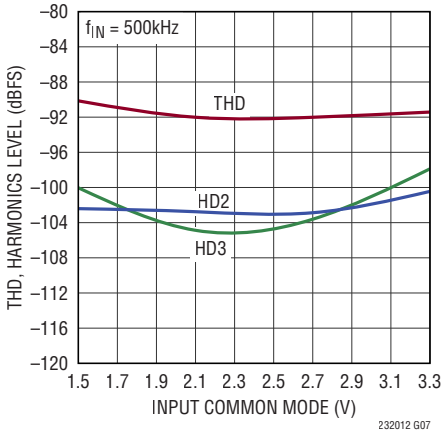

SNR, SINAD vs Reference Voltage, f_{IN} = 500kHz

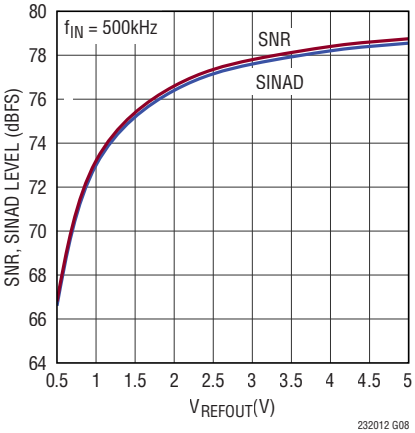

32k Point FFT, IMD, f_{SMPL} = 1.5Msps, A_{IN}^+ = 490kHz, A_{IN}^- = 510kHz

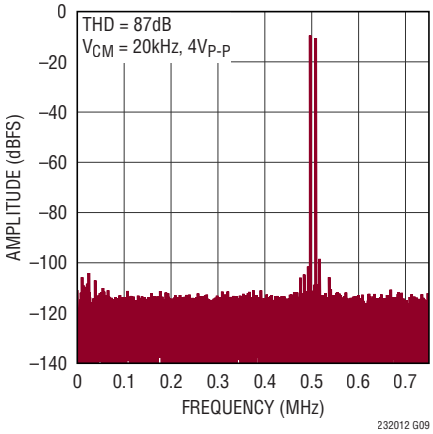

TYPICAL PERFORMANCE CHARACTERISTICS

T_A = 25°C, V_{DD} = 5V, OV_{DD} = 2.5V, REFOUT1,2,3,4 = 4.096V, f_{SMPL} = 1.5Msps, unless otherwise noted.

CMRR vs Input Frequency

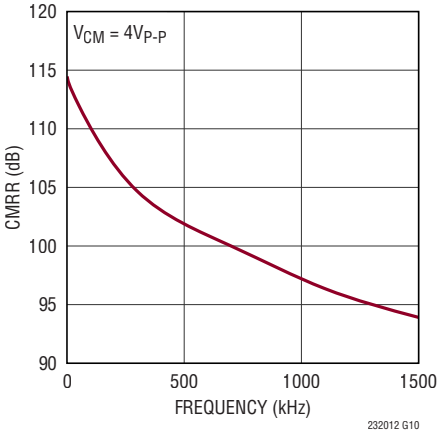

Crosstalk vs Input Frequency

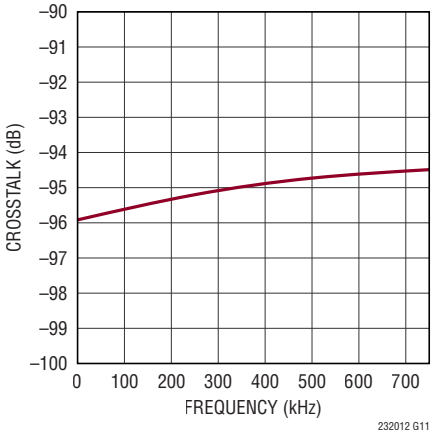

Step Response (Large Signal Settling)

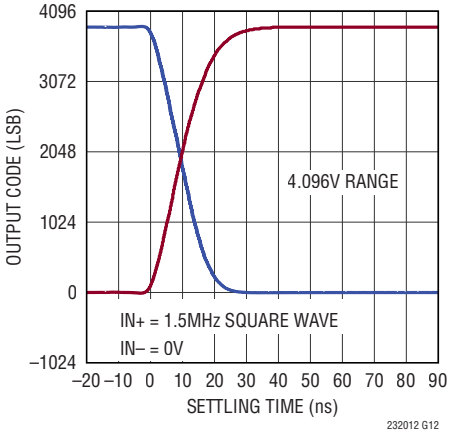

Step Response (Fine Settling)

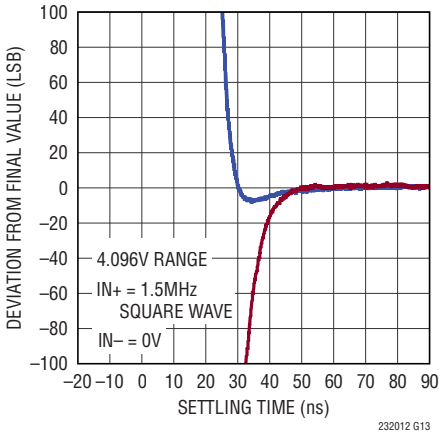

External Reference Supply Current vs Sample Frequency

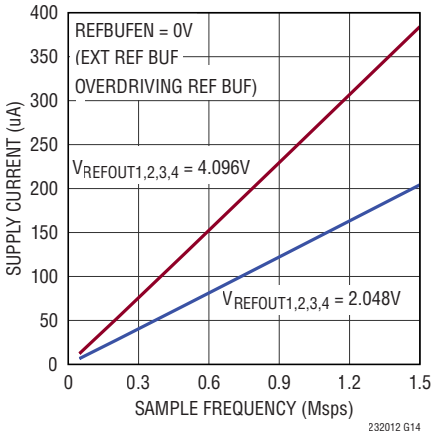

REF Output vs Temperature

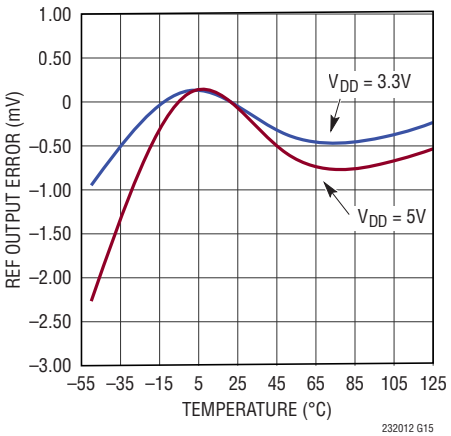

Offset Error vs Temperature

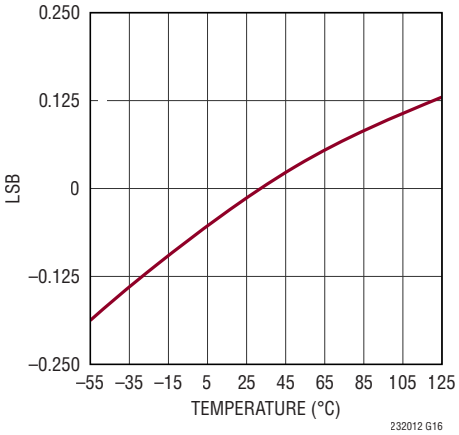

Supply Current vs Sample Frequency

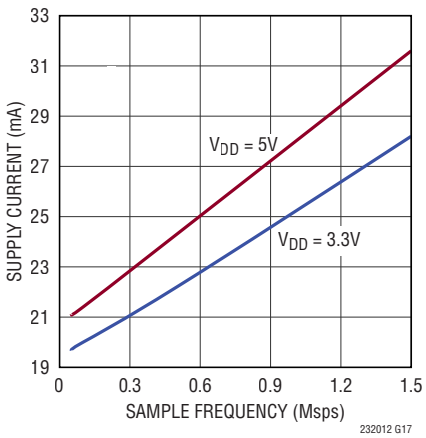

OV_{DD} Current vs SCK Frequency, C_{LOAD} = 10pF

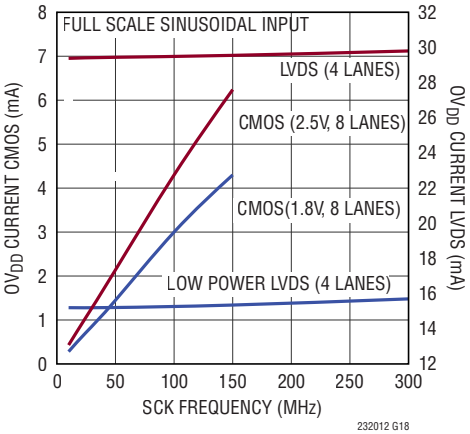

PIN FUNCTIONS

Pins that are the same for all digital I/O modes.

A_{IN6}^+, A_{IN6}^- (Pins 2, 1): Analog Differential Input Pins. Full-scale range ($A_{IN6}^+ - A_{IN6}^-$) is ±REFOUT3 voltage. These pins can be driven from V_{DD} to GND.

GND (Pins 3, 7, 12, 18, 26, 32, 38, 46, 49): Ground. These pins and exposed pad (Pin 53) must be tied directly to a solid ground plane.

A_{IN5}^+, A_{IN5}^- (Pins 5, 4): Analog Differential Input Pins. Full-scale range ($A_{IN5}^+ - A_{IN5}^-$) is ±REFOUT3 voltage. These pins can be driven from V_{DD} to GND.

REFOUT3 (Pin 6): Reference Buffer 3 Output. An onboard buffer nominally outputs 4.096V to this pin. This pin is referred to GND and should be decoupled closely to the pin with a 10µF (X5R, 0805 size) ceramic capacitor. The internal buffer driving this pin may be disabled by grounding the REFBUFEN pin. If the buffer is disabled, an external reference may drive this pin in the range of 1.25V to 5V.

REF (Pin 8): Common 4.096V reference output. Decouple to GND with a 1µF low ESR ceramic capacitor. May be overdriven with a single external reference to establish a common reference for ADC cores 1 through 4.

REFOUT2 (Pin 9): Reference Buffer 2 Output. An onboard buffer nominally outputs 4.096V to this pin. This pin is referred to GND and should be decoupled closely to the pin with a 10µF (X5R, 0805 size) ceramic capacitor. The internal buffer driving this pin may be disabled by grounding the REFBUFEN pin. If the buffer is disabled, an external reference may drive this pin in the range of 1.25V to 5V.

A_{IN4}^+, A_{IN4}^- (Pins 11, 10): Analog Differential Input Pins. Full-scale range ($A_{IN4}^+ - A_{IN4}^-$) is ±REFOUT2 voltage. These pins can be driven from V_{DD} to GND.

A_{IN3}^+, A_{IN3}^- (Pins 14, 13): Analog Differential Input Pins. Full-scale range ($A_{IN3}^+ - A_{IN3}^-$) is ±REFOUT2 voltage. These pins can be driven from V_{DD} to GND.

V_{DD} (Pins 15, 21, 44, 52): Power Supply. Bypass V_{DD} to GND with a 10µF ceramic capacitor and a 0.1µF ceramic capacitor close to the part. The V_{DD} pins should be shorted together and driven from the same supply.

A_{IN2}^+, A_{IN2}^- (Pins 17, 16): Analog Differential Input Pins. Full-scale range ($A_{IN2}^+ - A_{IN2}^-$) is ±REFOUT1 voltage. These pins can be driven from V_{DD} to GND.

A_{IN1}^+, A_{IN1}^- (Pins 20, 19): Analog Differential Input Pins. Full-scale range ($A_{IN1}^+ - A_{IN1}^-$) is ±REFOUT1 voltage. These pins can be driven from V_{DD} to GND.

REFOUT1 (Pin 22): Reference Buffer 1 Output. An onboard buffer nominally outputs 4.096V to this pin. This pin is referred to GND and should be decoupled closely to the pin with a 10µF (X5R, 0805 size) ceramic capacitor. The internal buffer driving this pin may be disabled by grounding the REFBUFEN pin. If the buffer is disabled, an external reference may drive this pin in the range of 1.25V to 5V.

$\overline{SDR}$/DDR (Pin 23): Double Data Rate Input. Controls the frequency of SCK and CLKOUT. Tie to GND for the falling edge of SCK to shift each serial data output (Single Data Rate, SDR). Tie to OV_{DD} to shift serial data output on each edge of SCK (Double Data Rate, DDR). CLKOUT will be a delayed version of SCK for both pin states.

$\overline{CNV}$ (Pin 24): Convert Input. This pin, when high, defines the acquisition phase. When this pin is driven low, the conversion phase is initiated and output data is clocked out. This input must be driven at OV_{DD} levels with a low jitter pulse. This pin is unaffected by the $\overline{CMOS}$/LVDS pin.

$\overline{CMOS}$/LVDS (Pin 25): I/O Mode Select. Ground this pin to enable CMOS mode, tie to OV_{DD} to enable LVDS mode. Float this pin to enable low power LVDS mode.

OV_{DD} (Pins 31, 37): I/O Interface Digital Power. The range of OV_{DD} is 1.71V to 2.63V. This supply is nominally set to the same supply as the host interface (CMOS: 1.8V or 2.5V, LVDS: 2.5V). Bypass OV_{DD} to GND (Pins 32 and 38) with 0.1µF capacitors.

PIN FUNCTIONS

REFBUFEN (Pin 43): Reference Buffer Output Enable. Tie to V_{DD} when using the internal reference. Tie to ground to disable the internal REFOUT1–4 buffers for use with external voltage references. This pin has a 500k internal pull-up to V_{DD}.

REFOUT4 (Pin 45): Reference Buffer 4 Output. An onboard buffer nominally outputs 4.096V to this pin. This pin is referred to GND and should be decoupled closely to the pin with a 10µF (X5R, 0805 size) ceramic capacitor. The internal buffer driving this pin may be disabled by grounding the REFBUFEN pin. If the buffer is disabled, an external reference may drive this pin in the range of 1.25V to 5V.

A_{IN8}^+, A_{IN8}^- (Pins 48, 47): Analog Differential Input Pins. Full-scale range ($A_{IN8}^+ - A_{IN8}^-$) is ±REFOUT4 voltage. These pins can be driven from V_{DD} to GND.

A_{IN7}^+, A_{IN7}^- (Pins 51, 50): Analog Differential Input Pins. Full-scale range ($A_{IN7}^+ - A_{IN7}^-$) is ±REFOUT4 voltage. These pins can be driven from V_{DD} to GND.

Exposed Pad (Pin 53): Ground. Solder this pad to ground.

CMOS DATA OUTPUT OPTION ($\overline{CMOS}$/LVDS = LOW)

SDO1 (Pin 27): CMOS Serial Data Output for ADC Channel 1. The conversion result is shifted MSB first on each falling edge of SCK in SDR mode and each SCK edge in DDR mode. 13 SCK edges are required for 13-bit conversion data to be read from SDO1 in SDR mode, 13 SCK edges in DDR mode. Supplying more clocks will yield data from subsequent channels (CH2, CH3, CH4, CH5, CH6, CH7, CH8).

SDO2 (Pin 28): CMOS Serial Data Output for ADC Channel 2. The conversion result is shifted MSB first on each falling edge of SCK in SDR mode and each SCK edge in DDR mode. 13 SCK edges are required for 13-bit conversion data to be read from SDO2 in SDR mode, 13 SCK edges in DDR mode. Supplying more clocks will yield data from subsequent channels (CH3, CH4, CH5, CH6, CH7, CH8, CH1).

SDO3 (Pin 29): CMOS Serial Data Output for ADC Channel 3. The conversion result is shifted MSB first on each falling edge of SCK in SDR mode and each SCK edge in DDR mode. 13 SCK edges are required for 13-bit conversion data to be read from SDO3 in SDR mode, 13 SCK edges in DDR mode. Supplying more clocks will yield data from subsequent channels (CH4, CH5, CH6, CH7, CH8, CH1, CH2).

SDO4 (Pin 30): CMOS Serial Data Output for ADC Channel 4. The conversion result is shifted MSB first on each falling edge of SCK in SDR mode and each SCK edge in DDR mode. 13 SCK edges are required for 13-bit conversion data to be read from SDO4 in SDR mode, 13 SCK edges in DDR mode. Supplying more clocks will yield data from subsequent channels (CH5, CH6, CH7, CH8, CH1, CH2, CH3).

CLKOUT (Pin 33): Serial Data Clock Output. CLKOUT provides a skew-matched clock to latch the SDO output at the receiver (FPGA). The logic level is determined by OV_{DD}. This pin echoes the input at SCK with a small delay.

$\overline{CLKOUTEN}$ (Pin 34): CLKOUT can be disabled by tying Pin 34 to OV_{DD} for a small power savings. If CLKOUT is used, ground this pin.

SDO5 (Pin 35): CMOS Serial Data Output for ADC Channel 5. The conversion result is shifted MSB first on each falling edge of SCK in SDR mode and each SCK edge in DDR mode. 13 SCK edges are required for 13-bit conversion data to be read from SDO5 in SDR mode, 13 SCK edges in DDR mode. Supplying more clocks will yield data from subsequent channels (CH6, CH7, CH8, CH1, CH2, CH3, CH4).

SDO6 (Pin 36): CMOS Serial Data Output for ADC Channel 6. The conversion result is shifted MSB first on each falling edge of SCK in SDR mode and each SCK edge in DDR mode. 13 SCK edges are required for 13-bit conversion data to be read from SDO6 in SDR mode, 13 SCK edges in DDR mode. Supplying more clocks will yield data from subsequent channels (CH7, CH8, CH1, CH2, CH3, CH4, CH5).

PIN FUNCTIONS

SDO7 (Pin 39): CMOS Serial Data Output for ADC Channel 7. The conversion result is shifted MSB first on each falling edge of SCK in SDR mode and each SCK edge in DDR mode. 13 SCK edges are required for 13-bit conversion data to be read from SDO7 in SDR mode, 13 SCK edges in DDR mode. Supplying more clocks will yield data from subsequent channels (CH8, CH1, CH2, CH3, CH4, CH5, CH6).

SDO8 (Pin 40): CMOS Serial Data Output for ADC Channel 8. The conversion result is shifted MSB first on each falling edge of SCK in SDR mode and each SCK edge in DDR mode. 13 SCK edges are required for 13-bit conversion data to be read from SDO8 in SDR mode, 13 SCK edges in DDR mode. Supplying more clocks will yield data from subsequent channels (CH1, CH2, CH3, CH4, CH5, CH6, CH7).

SCK (Pin 41): Serial Data Clock Input. The falling edge of this clock shifts the conversion result MSB first onto the SDO pins in SDR mode (DDR = LOW). In DDR mode ($\overline{SDR}$/DDR = HIGH) each edge of this clock shifts the conversion result MSB first onto the SDO pins. The logic level is determined by OV_{DD}.

DNC (Pin 42): In CMOS mode do not connect this pin.

LVDS DATA OUTPUT OPTION ($\overline{CMOS}$/LVDS = HIGH OR FLOAT)

SDOA+, SDOA– (Pins 27, 28): LVDS Serial Data Output for ADC Channels 1 and 2. The conversion result is shifted CH1 MSB first on each falling edge of SCK in SDR mode and each SCK edge in DDR mode. 32 SCK edges are required for 13-bit conversion data to be read from A_{IN1} and A_{IN2} on SDOA in SDR mode, 13 SCK edges in DDR mode. Supplying more clocks will yield data from subsequent channels (CH3, CH4, CH5, CH6, CH7, CH8).Terminate with a 100Ω resistor at the receiver (FPGA).

SDOB+, SDOB– (Pins 29, 30): LVDS Serial Data Output for ADC Channels 3 and 4. The conversion result is shifted CH3 MSB first on each falling edge of SCK in SDR mode and each SCK edge in DDR mode. 32 SCK edges are required for 13-bit conversion data to be read from A_{IN3} and A_{IN4} on SDOB in SDR mode, 13 SCK edges in DDR mode. Supplying more clocks will yield data from subsequent channels (CH5, CH6, CH7, CH8, CH1, CH2).Terminate with a 100Ω resistor at the receiver (FPGA).

CLKOUT+, CLKOUT– (Pins 33, 34): Serial Data Clock Output. CLKOUT provides a skew-matched clock to latch the SDO output at the receiver. These pins echo the input at SCK with a small delay. These pins must be differentially terminated by an external 100Ω resistor at the receiver (FPGA).

SDOC+, SDOC– (Pins 35, 36): LVDS Serial Data Output for ADC channels 5 and 6. The conversion result is shifted CH5 MSB first on each falling edge of SCK in SDR mode and each SCK edge in DDR mode. 32 SCK edges are required for 13-bit conversion data to be read from A_{IN5} and A_{IN6} on SDOA in SDR mode, 13 SCK edges in DDR mode. Supplying more clocks will yield data from subsequent channels (CH7, CH8, CH1, CH2, CH3, CH4).Terminate with a 100Ω resistor at the receiver (FPGA).

SDOD+, SDOD– (Pins 39, 40): LVDS Serial Data Output for ADC Channels 7 and 8. The conversion result is shifted CH7 MSB first on each falling edge of SCK in SDR mode and each SCK edge in DDR mode. 32 SCK edges are required for 13-bit conversion data to be read from A_{IN7} and A_{IN8} on SDOA in SDR mode, 13 SCK edges in DDR mode. Supplying more clocks will yield data from subsequent channels (CH1, CH2, CH3, CH4, CH5, CH6).Terminate with a 100Ω resistor at the receiver (FPGA).

SCK+, SCK– (Pins 41, 42): Serial Data Clock Input. The falling edge of this clock shifts the conversion result MSB first onto the SDO pins in SDR mode ($\overline{SDR}$/DDR = LOW). In DDR mode ($\overline{SDR}$/DDR = HIGH) each edge of this clock shifts the conversion result MSB first onto the SDO pins. These pins must be differentially terminated by an external 100Ω resistor at the receiver (ADC).

FUNCTIONAL BLOCK DIAGRAM

CMOS IO Mode

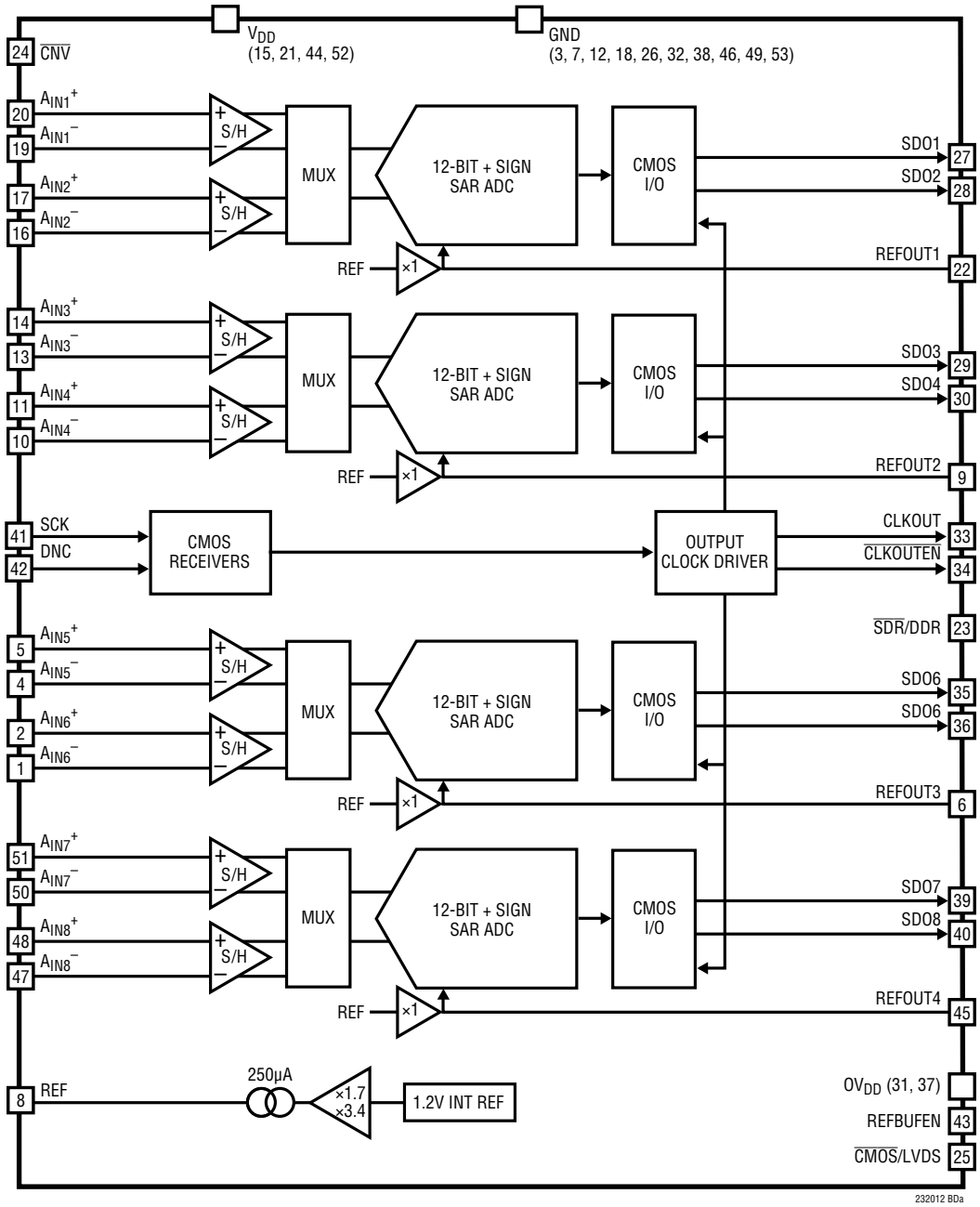

FUNCTIONAL BLOCK DIAGRAM

LVDS IO Mode

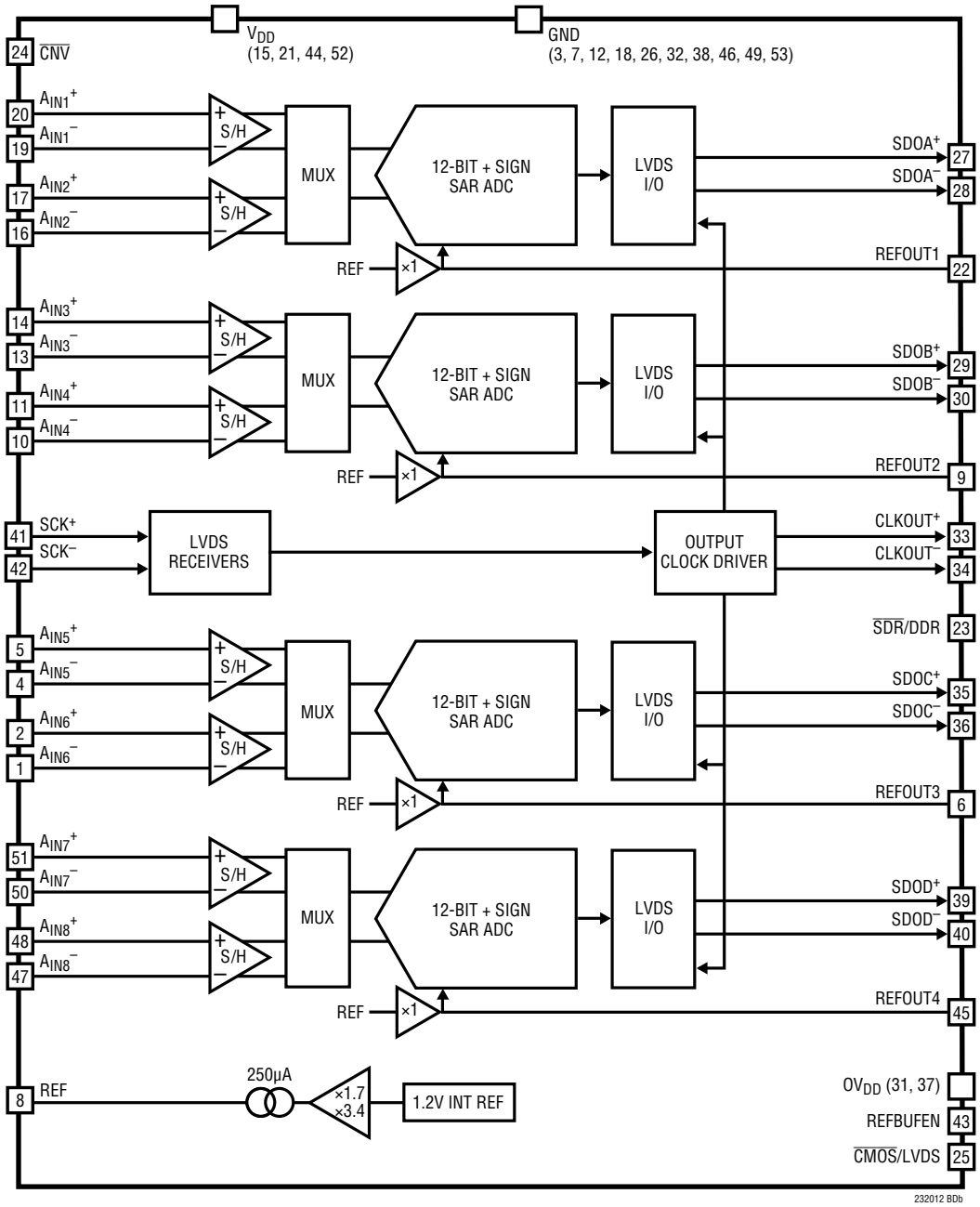

TIMING DIAGRAM

SDR Mode, CMOS (Reading 1 Channel per SDO)

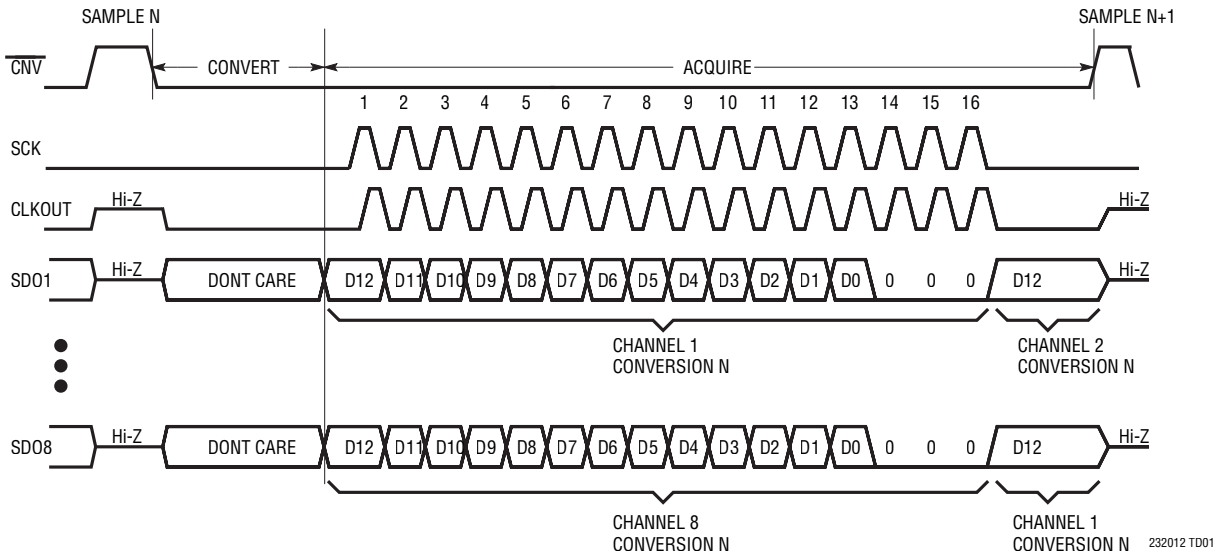

DDR Mode, CMOS (Reading 1 Channel per SDO)

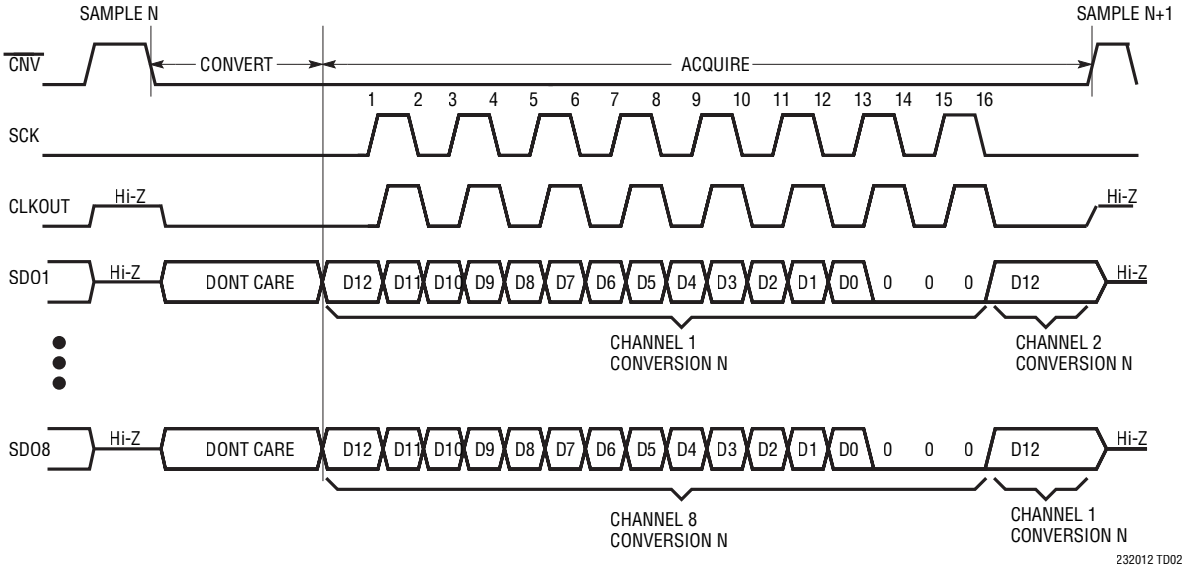

TIMING DIAGRAM

SDR Mode, LVDS (Reading 2 Channels per SDO Pair)

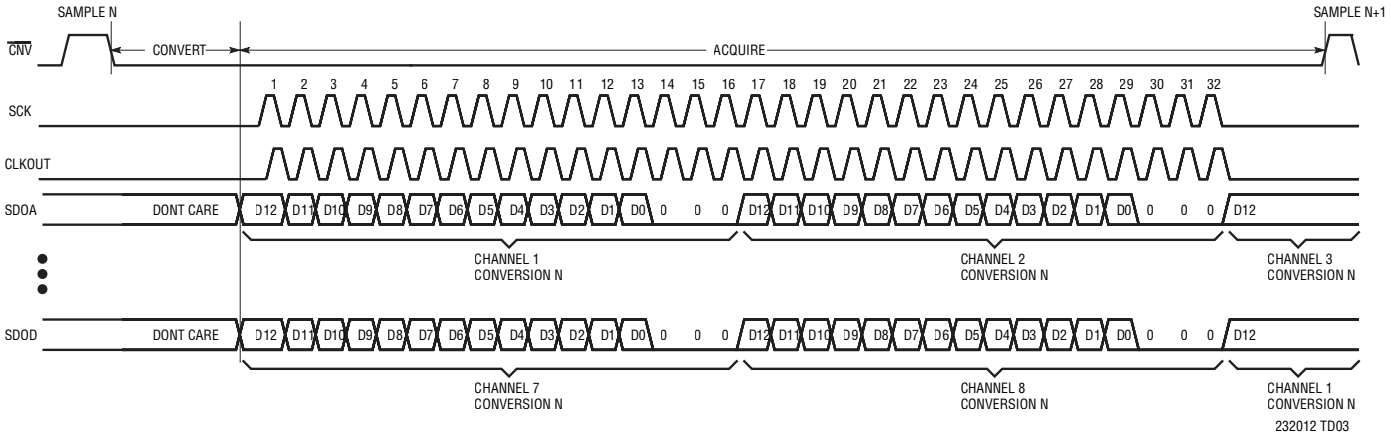

DDR Mode, LVDS (Reading 2 Channels per SDO Pair)

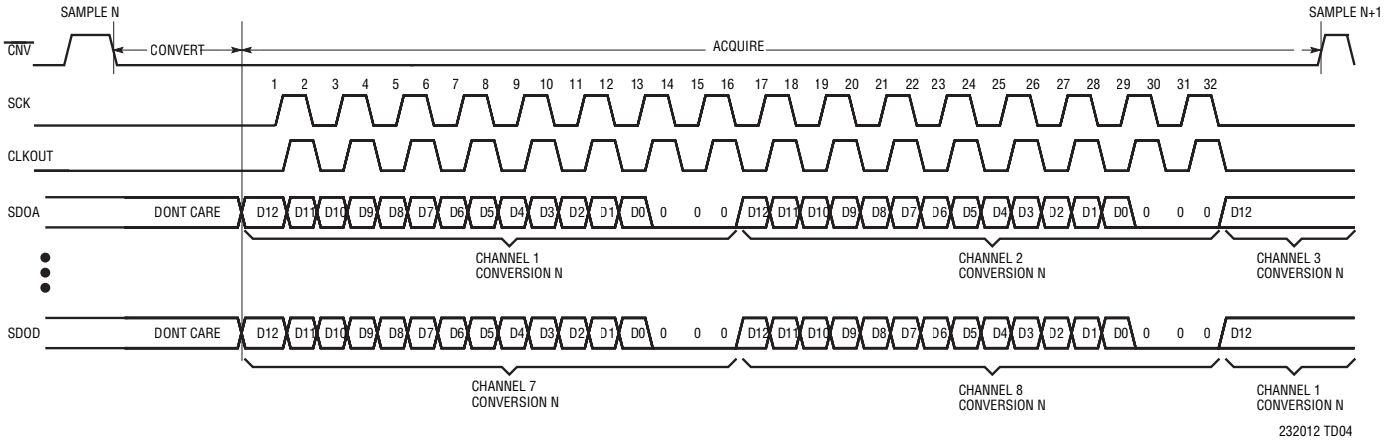

APPLICATIONS INFORMATION

OVERVIEW

The LTC2320-12 is a low noise, high speed 12-bit successive approximation register (SAR) ADC with differential inputs and a wide input common mode range. Operating from a single 3.3V or 5V supply, the LTC2320-12 has a $4V_{P-P}$ or $8V_{P-P}$ differential input range, making it ideal for applications which require a wide dynamic range. The LTC2320-12 achieves ±0.25LSB INL typical, no missing codes at 12 bits and 77dB SNR.

The LTC2320-12 has an onboard reference buffer and low drift (20ppm/°C max) 4.096V temperature-compensated reference. The LTC2320-12 also has a high speed SPI-compatible serial interface that supports CMOS or LVDS. The fast 1.5Msps per channel throughput with no latency makes the LTC2320-12 ideally suited for a wide variety of high speed applications. The LTC2320-12 dissipates only 20mW per channel. Nap and sleep modes are also provided to reduce the power consumption of the LTC2320-12 during inactive periods for further power savings.

CONVERTER OPERATION

The LTC2320-12 operates in two phases. During the acquisition phase, the sample capacitor is connected to the analog input pins A_{IN}^+ and A_{IN}^- to sample the differential analog input voltage, as shown in Figure 3. A falling edge on the $\overline{CNV}$ pin initiates a conversion. During the conversion phase, the 12-bit CDAC is sequenced through a successive approximation algorithm effectively comparing the sampled input with binary-weighted fractions of the reference voltage (e.g., $V_{REFOUT}/2$, $V_{REFOUT}/4$ … $V_{REFOUT}/32768$) using a differential comparator. At the end of conversion, a CDAC output approximates the sampled analog input. The ADC control logic then prepares the 12-bit digital output code for serial transfer.

TRANSFER FUNCTION

The LTC2320-12 digitizes the full-scale voltage of 2 • REFOUT into 2^{13} levels, resulting in an LSB size of 1mV with REFBUF = 4.096V. The ideal transfer function is shown in Figure 2. The output data is in 2's complement format. When driven by fully differential inputs, the transfer function spans 2^{13} codes. When driven by pseudo-differential inputs, the transfer function spans 2^{12} codes.

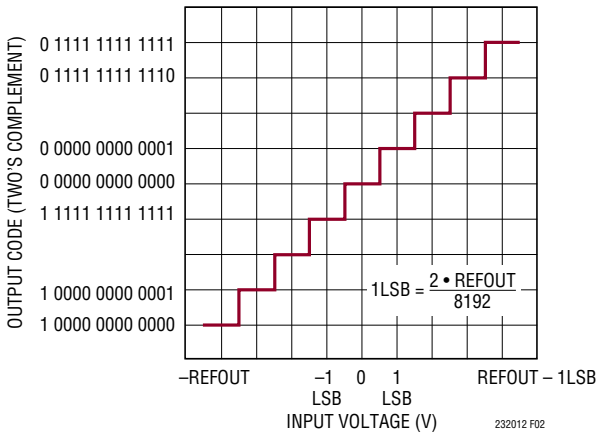

Figure 2. LTC2320-12 Transfer Function

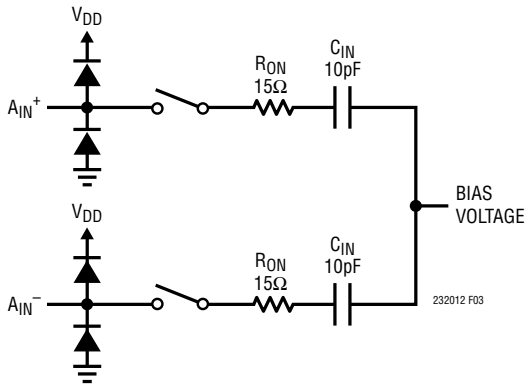

Figure 3. The Equivalent Circuit for the Differential Analog Input of the LTC2320-12

Table 1. Code Ranges for the Analog Input Operational Modes

MODE	SPAN ($V_{IN}^+ - V_{IN}^-$)	MIN CODE	MAX CODE
Fully Differential	–REFOUT to +REFOUT	1 0000 0000 0000	0 1111 1111 1111
Pseudo-Differential Bipolar	–-REFOUT/2 to +REFOUT/2	1 1000 0000 0000	0 0111 1111 1111
Pseudo-Differential Unipolar	0 to REFOUT	0 0000 0000 0000	0 1111 1111 1111

APPLICATIONS INFORMATION

Analog Input

The differential inputs of the LTC2320-12 provide great flexibility to convert a wide variety of analog signals with no configuration required. The LTC2320-12 digitizes the difference voltage between the A_{IN}^+ and A_{IN}^- pins while supporting a wide common mode input range. The analog input signals can have an arbitrary relationship to each other, provided that they remain between V_{DD} and GND. The LTC2320-12 can also digitize more limited classes of analog input signals such as pseudo-differential unipolar/bipolar and fully differential with no configuration required.

The analog inputs of the LTC2320-12 can be modeled by the equivalent circuit shown in Figure 3. The back-to-back diodes at the inputs form clamps that provide ESD protection. In the acquisition phase, 10pF (C_{IN}) from the sampling capacitor in series with approximately 15Ω (R_{ON}) from the on-resistance of the sampling switch is connected to the input. Any unwanted signal that is common to both inputs will be reduced by the common mode rejection of the ADC sampler. The inputs of the ADC core draw a small current spike while charging the C_{IN} capacitors during acquisition.

Single-Ended Signals

Single-ended signals can be directly digitized by the LTC2320-12. These signals should be sensed pseudo-differentially for improved common mode rejection. By connecting the reference signal (e.g., ground sense) of the main analog signal to the other A_{IN} pin, any noise or disturbance common to the two signals will be rejected by the high CMRR of the ADC. The LTC2320-12 flexibility handles both pseudo-differential unipolar and bipolar signals, with no configuration required. The wide common mode input range relaxes the accuracy requirements of any signal conditioning circuits prior to the analog inputs.

Pseudo-Differential Bipolar Input Range

The pseudo-differential bipolar configuration represents driving one of the analog inputs at a fixed voltage, typically $V_{REF}/2$, and applying a signal to the other A_{IN} pin. In this case the analog input swings symmetrically around the fixed input yielding bipolar two's complement output codes with an ADC span of half of full-scale. This configuration is illustrated in Figure 4, and the corresponding transfer function in Figure 5. The fixed analog input pin need not be set at $V_{REF}/2$, but at some point within the V_{DD} rails allowing the alternate input to swing symmetrically around this voltage. If the input signal ($A_{IN}^+ - A_{IN}^-$) swings beyond ±REFOUT1,2,3,4/2, valid codes will be generated by the ADC and must be clamped by the user, if necessary.

Pseudo-Differential Unipolar Input Range

The pseudo-differential unipolar configuration represents driving one of the analog inputs at ground and applying a signal to the other A_{IN} pin. In this case, the analog input swings between ground and V_{REF} yielding unipolar two's complement output codes with an ADC span of half of full-scale. This configuration is illustrated in Figure 6, and the corresponding transfer function in Figure 7. If the input signal ($A_{IN}^+ - A_{IN}^-$) swings negative, valid codes will be

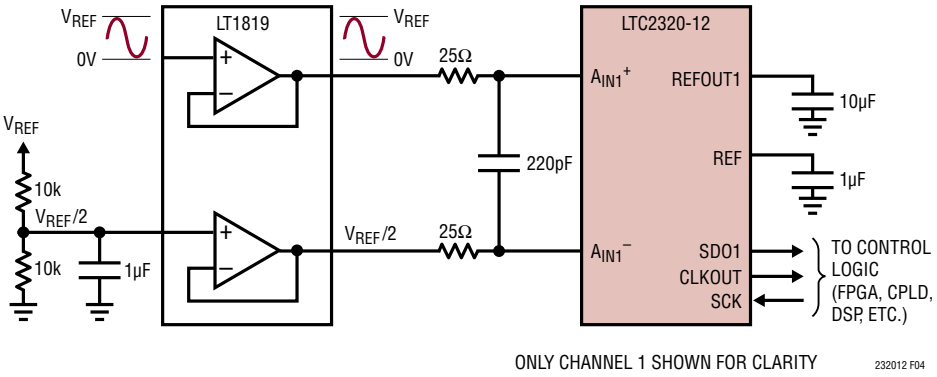

Figure 4. Pseudo-Differential Bipolar Application Circuit

APPLICATIONS INFORMATION

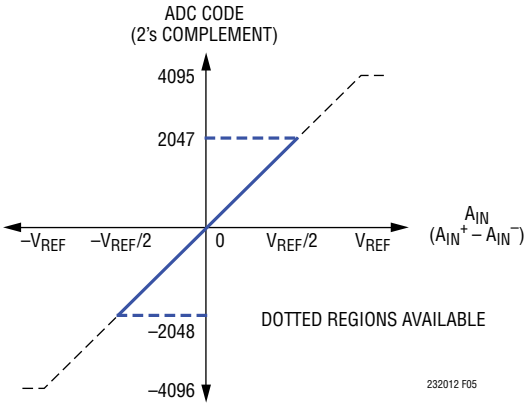

Figure 5. Pseudo-Differential Bipolar Transfer Function

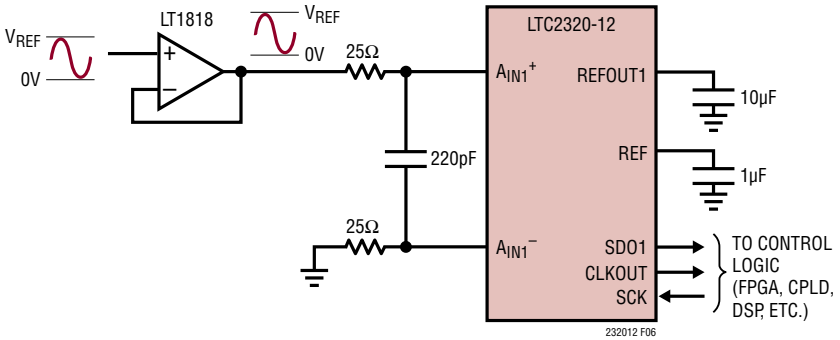

Figure 6. Pseudo-Differential Unipolar Application Circuit

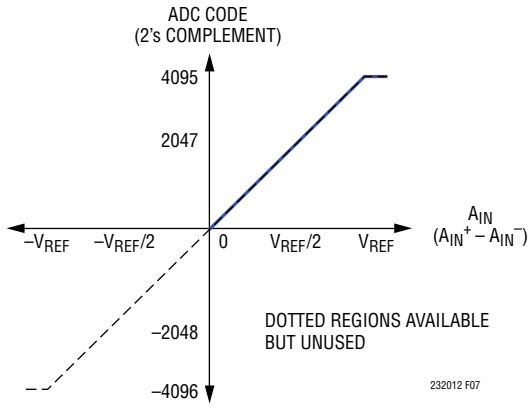

Figure 7. Pseudo-Differential Unipolar Transfer Function

APPLICATIONS INFORMATION

generated by the ADC and must be clamped by the user, if necessary.

Single-Ended-to-Differential Conversion

While single-ended signals can be directly digitized as previously discussed, single-ended to differential conversion circuits may also be used when higher dynamic range is desired. By producing a differential signal at the inputs of the LTC2320-12, the signal swing presented to the ADC is maximized, thus increasing the achievable SNR.

The LT®1819 high speed dual operational amplifier is recommended for performing single-ended-to-differential conversions, as shown in Figure 8. In this case, the first amplifier is configured as a unity-gain buffer and the single-ended input signal directly drives the high impedance input of this amplifier.

Fully-Differential Inputs

To achieve the best distortion performance of the LTC2320-12, we recommend driving a fully-differential signal through LT1819 amplifiers configured as two unity-gain buffers, as shown in Figure 9. This circuit achieves the full data sheet THD specification of –90dB at input frequencies up to 500kHz. A fully-differential input signal can span the maximum full-scale of the ADC, up to ±REFOUT1,2,3,4. The common mode input voltage can span the entire supply range up to V_{DD}, limited by the input signal swing. The fully-differential configuration is illustrated in Figure 10, with the corresponding transfer function illustrated in Figure 11.

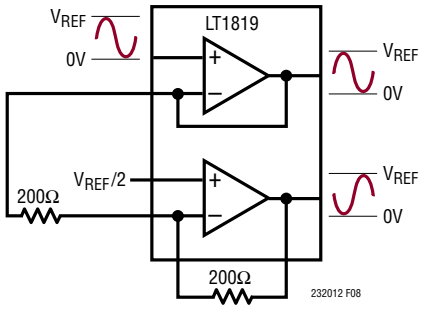

Figure 8. Single-Ended to Differential Driver

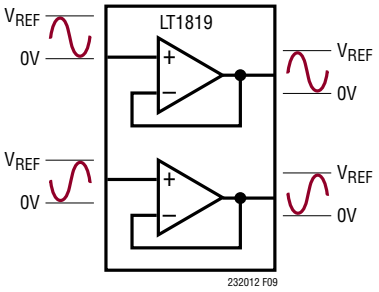

Figure 9. LT1819 Buffering a Fully-Differential Signal Source

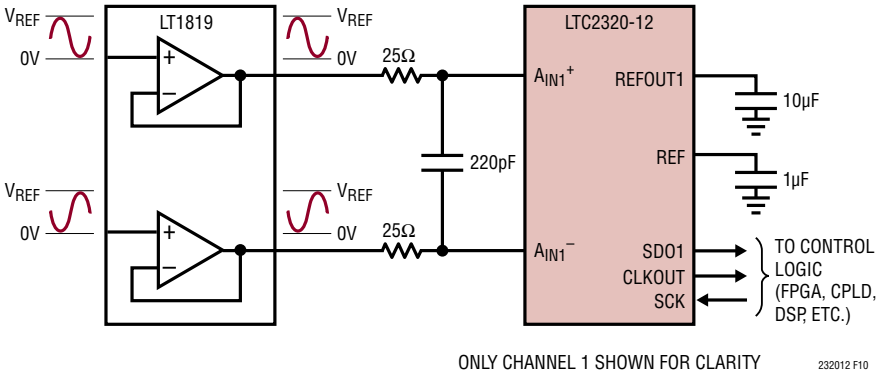

Figure 10. Fully-Differential Application Circuit

APPLICATIONS INFORMATION

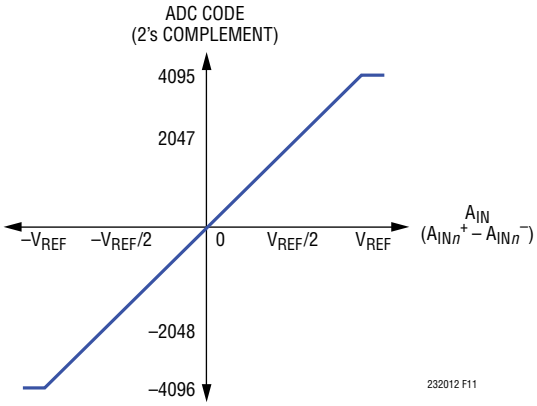

Figure 11. Fully-Differential Transfer Function

INPUT DRIVE CIRCUITS

A low impedance source can directly drive the high impedance inputs of the LTC2320-12 without gain error. A high impedance source should be buffered to minimize settling time during acquisition and to optimize the distortion performance of the ADC. Minimizing settling time is important even for DC inputs, because the ADC inputs draw a current spike when during acquisition.

For best performance, a buffer amplifier should be used to drive the analog inputs of the LTC2320-12. The amplifier provides low output impedance to minimize gain error and allows for fast settling of the analog signal during the acquisition phase. It also provides isolation between the signal source and the ADC inputs, which draw a small current spike during acquisition.

Input Filtering

The noise and distortion of the buffer amplifier and signal source must be considered since they add to the ADC noise and distortion. Noisy input signals should be filtered prior to the buffer amplifier input with a low bandwidth filter to minimize noise. The simple 1-pole RC lowpass filter shown in Figure 12 is sufficient for many applications.

The sampling switch on-resistance (R_{ON}) and the sample capacitor (C_{IN}) form a second lowpass filter that limits the input bandwidth to the ADC core to 110MHz. A buffer amplifier with a low noise density must be selected to minimize the degradation of the SNR over this bandwidth.

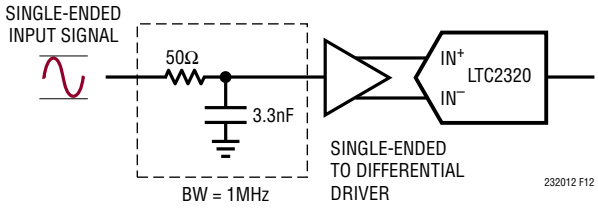

Figure 12. Input Signal Chain

High quality capacitors and resistors should be used in the RC filters since these components can add distortion. NPO and silver mica type dielectric capacitors have excellent linearity. Carbon surface mount resistors can generate distortion from self heating and from damage that may occur during soldering. Metal film surface mount resistors are much less susceptible to both problems.

ADC REFERENCE

Internal Reference

The LTC2320-12 has an on-chip, low noise, low drift (20ppm/°C max), temperature compensated bandgap reference. It is internally buffered and is available at REF (Pin 8). The reference buffer gains the internal reference voltage to 4.096V for supply voltages V_{DD} = 5V and to 2.048V for V_{DD} = 3.3V. The REF pin also drives the four internal reference buffers with a current limited output (250µA) so it may be easily overdriven with an external reference in the range of 1.25V to 5V. Bypass REF to GND with a 1µF (X5R, 0805 size) ceramic capacitor to compensate the reference buffer and minimize noise. The 1µF capacitor should be as close as possible to the LTC2320-12 package to minimize wiring inductance. The voltage on the REF pin must be externally buffered if used for external circuitry.

External Reference

The internal REFOUT1,2,3,4 buffers can also be overdriven from 1.25V to 5V with an external reference at REFOUT1,2,3,4 as shown in Figure 13 (c). To do so, REFBUFEN must be grounded to disable the REF buffers. A 55k internal resistance loads the REFOUT1,2,3,4 pins when the REF buffers are disabled. To maximize the input

APPLICATIONS INFORMATION

Table 2. Table 2. Reference Configurations and Ranges

REFERENCE CONFIGURATION	V_{DD}	REFBUFEN	REF PIN	REFOUT1,2,3,4 PIN	DIFFERENTIAL INPUT RANGE PIN
Internal Reference with Internal Buffers	5V	5V	4.096V	4.096V	±4.096V
	3.3V	3.3V	2.048V	2.048V	±2.048V
Common External Reference with Internal Buffer (REF Pin Externally Overdriven)	5V	5V	1.25V to 5V	1.25V to 3.3V	±1.25V to ±5V
	3.3V	3.3V	1.25V to 5V	1.25V to 3.3V	±1.25V to ±3.3V
External Reference with REF Buffers Disabled	5V	0V	4.096V	1.25V to 5V	±1.25V to ±5V
	3.3V	0V	2.048V	1.25V to 3.3V	±1.25V to ±3.3V

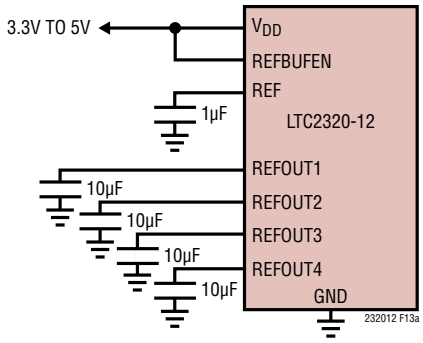

(13a) LTC2320-12 Internal Reference Circuit

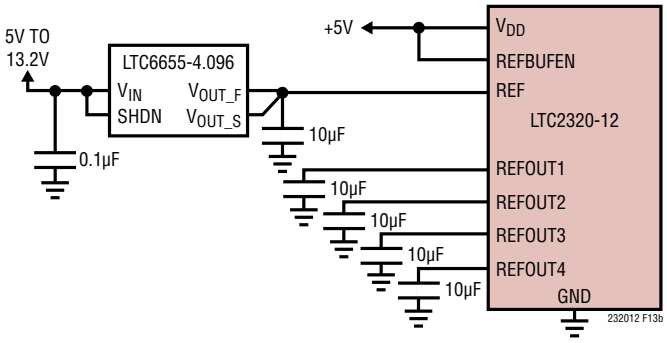

(13b) LTC2320-12 with a Shared External Reference Circuit

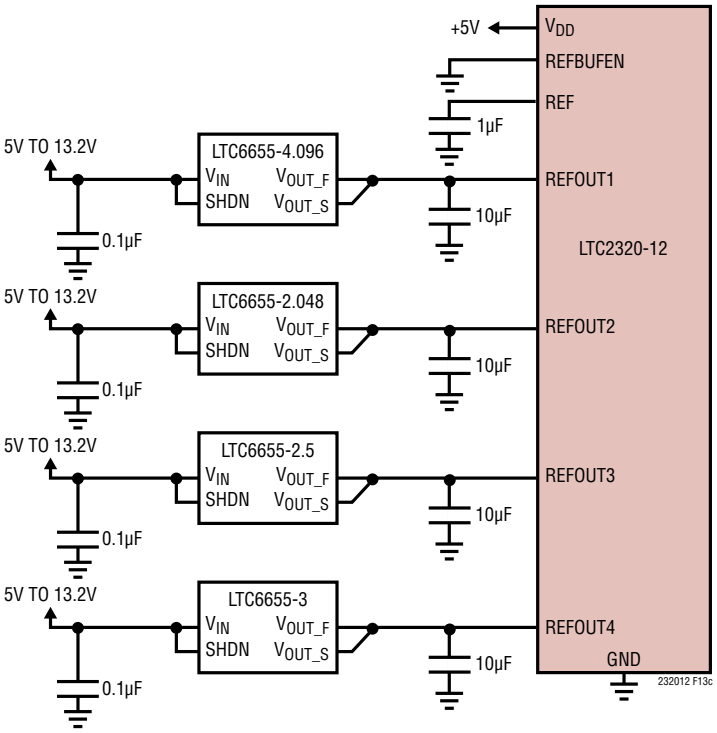

(13c) LTC2320-12 with Different External Reference Voltages

Figure 13. Reference Connections

APPLICATIONS INFORMATION

signal swing and corresponding SNR, the LTC6655-5 is recommended when overdriving REFOUT. The LTC6655-5 offers the same small size, accuracy, drift and extended temperature range as the LTC6655-4.096. By using a 5V reference, a higher SNR can be achieved. We recommend bypassing the LTC6655-5 with a 10µF ceramic capacitor (X5R, 0805 size) close to each of the REFOUT1,2,3,4 pins. If the REF pin voltage is used as a REFOUT reference when REFBUFEN is connected to GND, it should be buffered externally.

Internal Reference Buffer Transient Response

The REFOUT1,2,3,4 pins of the LTC2320-12 draw charge (Q_{CONV}) from the external bypass capacitors during each conversion cycle. If the internal reference buffer is overdriven, the external reference must provide all of this charge with a DC current equivalent to $I_{REF} = Q_{CONV}/t_{CYC}$. Thus, the DC current draw of $I_{REFOUT1,2,3,4}$ depends on the sampling rate and output code. In applications where a burst of samples is taken after idling for long periods, as shown in Figure 14 , I_{REFBUF} quickly goes from approximately ~75µA to a maximum of 500µA for REFOUT = 5V at 1.5Msps. This step in DC current draw triggers a transient response in the external reference that must be considered since any deviation in the voltage at REFOUT will affect the accuracy of the output code. If an external reference is used to overdrive REFOUT1,2,3,4, the fast settling LTC6655 reference is recommended.

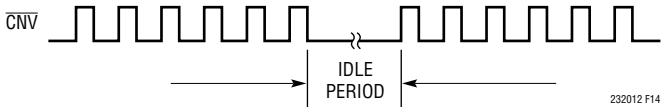

Figure 14. $\overline{CNV}$ Waveform Showing Burst Sampling

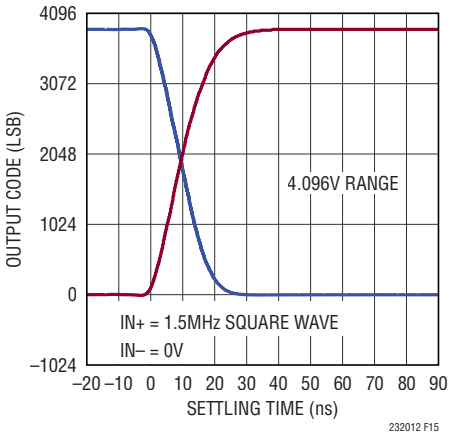

Figure 15. Transient Response of the LTC2320-12

DYNAMIC PERFORMANCE

Fast Fourier transform (FFT) techniques are used to test the ADC's frequency response, distortion and noise at the rated throughput. By applying a low distortion sine wave and analyzing the digital output using an FFT algorithm, the ADC's spectral content can be examined for frequencies outside the fundamental. The LTC2320-12 provides guaranteed tested limits for both AC distortion and noise measurements.

Signal-to-Noise and Distortion Ratio (SINAD)

The signal-to-noise and distortion ratio (SINAD) is the ratio between the RMS amplitude of the fundamental input frequency and the RMS amplitude of all other frequency components at the A/D output. The output is bandlimited to frequencies from above DC and below half the sampling frequency. Figure 16 shows that the LTC2320-12 achieves a typical SINAD of 77dB at a 1.5MHz sampling rate with a 500kHz input.

Signal-to-Noise Ratio (SNR)

The signal-to-noise ratio (SNR) is the ratio between the RMS amplitude of the fundamental input frequency and the RMS amplitude of all other frequency components except the first five harmonics and DC. Figure 16 shows that the LTC2320-12 achieves a typical SNR of 77dB at a 1.5MHz sampling rate with a 500kHz input.

APPLICATIONS INFORMATION

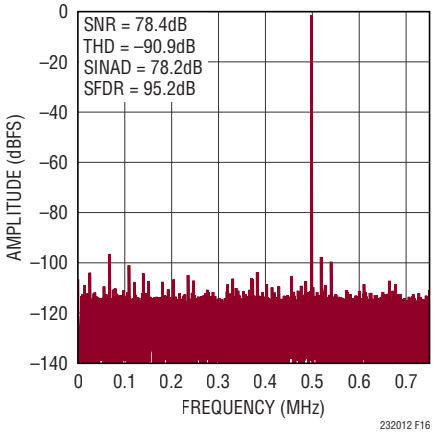

Figure 16. 32k Point FFT of the LTC2320-12

Total Harmonic Distortion (THD)

Total harmonic distortion (THD) is the ratio of the RMS sum of all harmonics of the input signal to the fundamental itself. The out-of-band harmonics alias into the frequency band between DC and half the sampling frequency ($f_{SMPL}/2$). THD is expressed as:

$$THD = 20\log\frac{\sqrt{V2^2 + V3^2 + V4^2 + \ldots + V_N{}^2}}{V1}$$

where V1 is the RMS amplitude of the fundamental frequency and V2 through V_N are the amplitudes of the second through Nth harmonics.

POWER CONSIDERATIONS

The LTC2320-12 requires two power supplies: the 3.3V to 5V power supply (V_{DD}), and the digital input/output interface power supply (OV_{DD}). The flexible OV_{DD} supply allows the LTC2320-12 to communicate with any digital logic operating between 1.8V and 2.5V. When using LVDS I/O, the OV_{DD} supply must be set to 2.5V.

Power Supply Sequencing

The LTC2320-12 does not have any specific power supply sequencing requirements. Care should be taken to adhere to the maximum voltage relationships described in the Absolute Maximum Ratings section. The LTC2320-12 has a power-on-reset (POR) circuit that will reset the LTC2320-12 at initial power-up or whenever the power supply voltage drops below 2V. Once the supply voltage re-enters the nominal supply voltage range, the POR will reinitialize the ADC. No conversions should be initiated until 10ms after a POR event to ensure the reinitialization period has ended. Any conversions initiated before this time will produce invalid results.

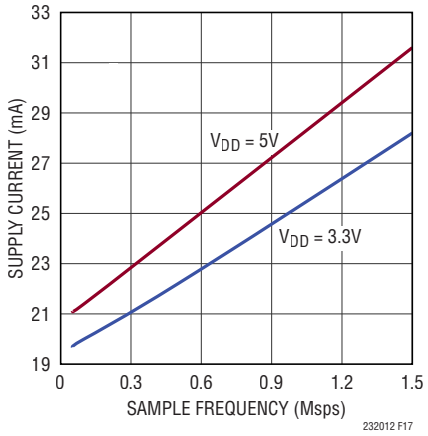

Figure 17. Power Supply Current of the LTC2320-12 Versus Sampling Rate

TIMING AND CONTROL

$\overline{CNV}$ Timing

The LTC2320-12 sampling and conversion is controlled by $\overline{CNV}$. A rising edge on $\overline{CNV}$ will start sampling and the falling edge starts the conversion and readout process. The conversion process is timed by the SCK input clock. For optimum performance, $\overline{CNV}$ should be driven by a clean low jitter signal. The Typical Application at the back of the data sheet illustrates a recommended implementation to reduce the relatively large jitter from an FPGA $\overline{CNV}$ pulse source. Note the low jitter input clock times the falling edge of the $\overline{CNV}$ signal. The rising edge jitter of $\overline{CNV}$ is much less critical to performance. The typical pulse width of the $\overline{CNV}$ signal is 30ns with < 1.5ns rise and fall times at a 1.5Msps conversion rate.

SCK Serial Data Clock Input

In SDR mode ($\overline{SDR}$/DDR Pin 23 = GND), the falling edge of this clock shifts the conversion result MSB first onto the SDO pins. A 100MHz external clock must be applied at

APPLICATIONS INFORMATION

the SCK pin to achieve 1.5Msps throughput using all eight SDO outputs. In DDR mode ($\overline{SDR}$/DDR Pin 23 = OV_{DD}), each input edge of SCK shifts the conversion result MSB first onto the SDO pins. A 50MHz external clock must be applied at the SCK pin to achieve 1.5Msps throughput using all eight SDO1 through SDO8 outputs.

CLKOUT Serial Data Clock Output

The CLKOUT output provides a skew-matched clock to latch the SDO output at the receiver. The timing skew of the CLKOUT and SDO outputs are matched. For high throughput applications, using CLKOUT instead of SCK to capture the SDO output eases timing requirements at the receiver. For low throughput speed applications, CLKOUT can be disabled by tying Pin 34 to OV_{DD}.

Nap/Sleep Modes

Nap mode is a method to save power without sacrificing power-up delays for subsequent conversions. Sleep mode has substantial power savings, but a power-up delay is incurred to allow the reference and power systems to become valid. To enter nap mode on the LTC2320-12, the SCK signal must be held high or low and a series of two $\overline{CNV}$ pulses must be applied. This is the case for both CMOS and LVDS modes. The second rising edge of $\overline{CNV}$ initiates the nap state. The nap state will persist until either a single rising edge of SCK is applied, or further $\overline{CNV}$ pulses are applied. The SCK rising edge will put the LTC2320-12 back into the operational (full-power) state. When in nap mode, two additional pulses will put the LTC2320-12 in sleep mode. When configured for CMOS I/O operation, a single rising edge of SCK can return the LTC2320-12 into operational mode. A 10ms delay is necessary after exiting sleep mode to allow the reference buffer to recharge the external filter capacitor. In LVDS mode, exit sleep mode by supplying a fifth $\overline{CNV}$ pulse. The fifth pulse will return the LTC2320-12 to operational mode, and further SCK pulses will keep the part from re-entering nap and sleep modes. The fifth SCK pulse also works in CMOS mode as a method to exit sleep. In the absence of SCK pulses, repetitive $\overline{CNV}$ pulses will cycle the LTC2320-12 between operational, nap and sleep modes indefinitely.

Refer to the timing diagrams in Figure 18, Figure 19, Figure 20 and Figure 21 for more detailed timing information about sleep and nap modes.

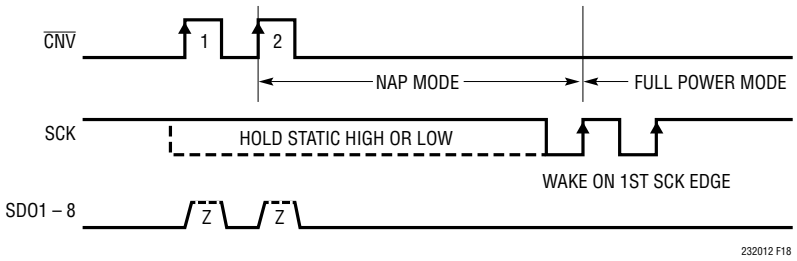

Figure 18. CMOS and LVDS Mode NAP and WAKE Using SCK

APPLICATIONS INFORMATION

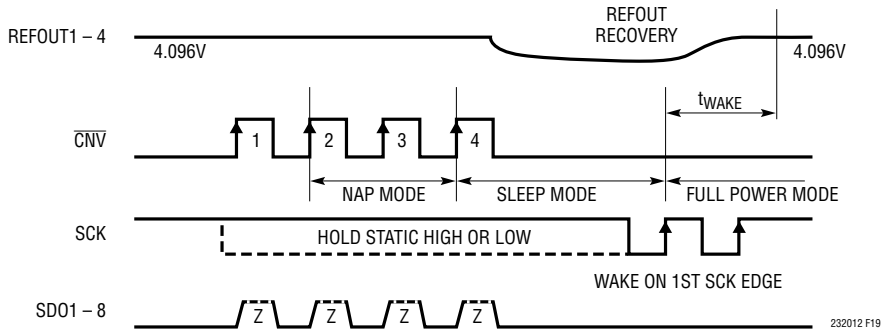

Figure 19. CMOS Mode SLEEP and WAKE Using SCK

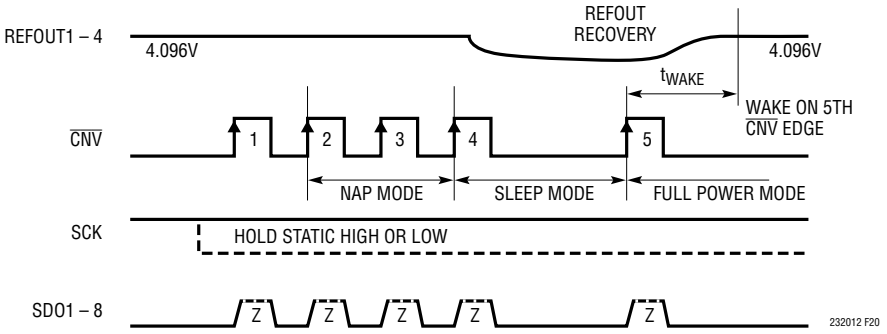

Figure 20. LVDS and CMOS Mode SLEEP and WAKE Using $\overline{\text{CNV}}$

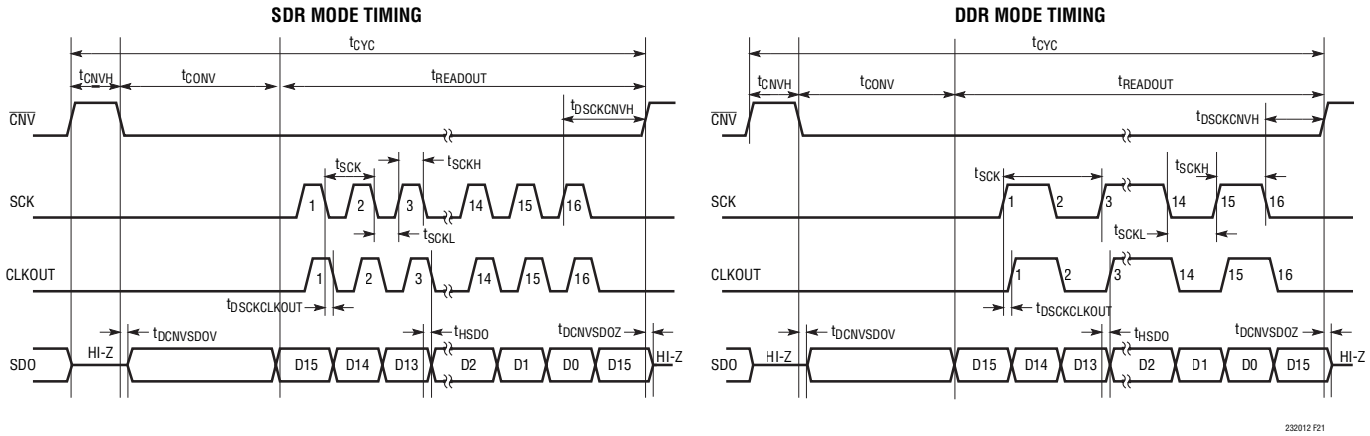

Figure 21. LTC2320-12 Timing Diagram

APPLICATIONS INFORMATION

DIGITAL INTERFACE

The LTC2320-12 features a serial digital interface that is simple and straightforward to use. The flexible OV_{DD} supply allows the LTC2320-12 to communicate with any digital logic operating between 1.8V and 2.5V. In addition to a standard CMOS SPI interface, the LTC2320-12 provides an optional LVDS SPI interface to support low noise digital design. The $\overline{CMOS}$/LVDS pin is used to select the digital interface mode. The SCK input clock shifts the conversion result MSB first on the SDO pins. CLKOUT provides a skew-matched clock to latch the SDO output at the receiver. The timing skew of the CLKOUT and SDO outputs are matched. For high throughput applications, using CLKOUT instead of SCK to capture the SDO output eases timing requirements at the receiver. In CMOS mode, use the SDO1 – SDO8, and CLKOUT pins as outputs. Use the SCK pin as an input. In LVDS mode, use the $SDOA^+$/$SDOA^-$ through $SDOD^+$/$SDOD^-$ and $CLKOUT^+$/$CLKOUT^-$ pins as differential outputs. Each LVDS lane yields two channels worth of data: SDOA yields CH1 and CH2 data, SDOB yields CH3 and CH4 data, SDOC yields CH5 and CH6 data and SDOD yields CH7 and CH8 data. These pins must be differentially terminated by an external 100Ω resistor at the receiver (FPGA). The SCK^+/SCK^- pins are differential inputs and must be terminated differentially by an external 100Ω resistor at the receiver(ADC).

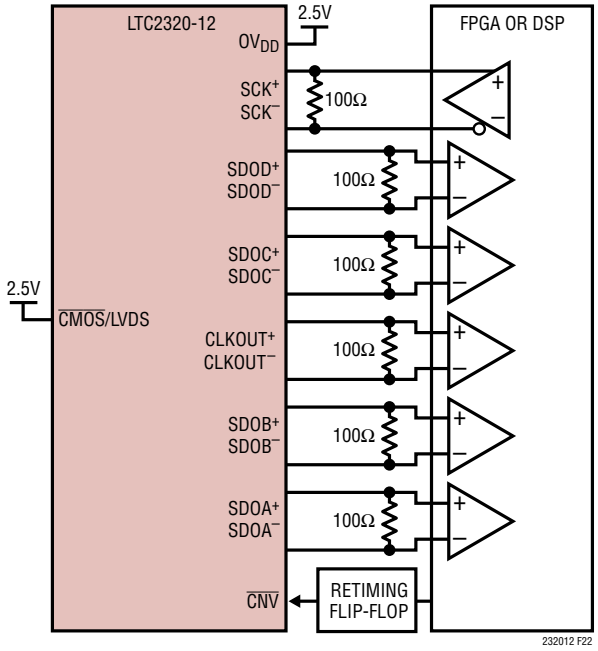

Figure 22. LTC2320-12 Using the LVDS Interface

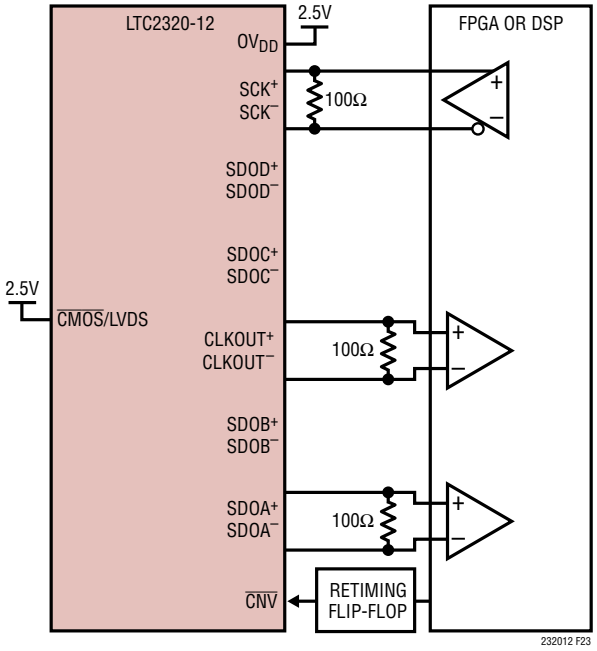

Figure 23. LTC2320-12 Using the LVDS Interface with One Lane

APPLICATIONS INFORMATION

SDR/DDR Modes

The LTC2320-12 has an SDR (single data rate) and DDR (double data rate) mode for reading conversion data from the SDO pins. In both modes, CLKOUT is a delayed version of SCK. In SDR mode, each negative edge of SCK shifts the conversion data out the SDO pins. In DDR mode, each edge of the SCK input shifts the conversion data out. In DDR mode, the required SCK frequency is half of what is required in SDR mode. Tie $\overline{SDR}$/DDR to ground to configure for SDR mode and to OV_{DD} for DDR mode. The CLKOUT signal is a delayed version of the SCK input and is phase aligned with the SDO data. In SDR mode, the SDO transitions on the falling edge of CLKOUT as illustrated in Figure 21. We recommend using the rising edge of CLKOUT to latch the SDO data into the FPGA register in SDR mode. In DDR mode, The SDO transitions on each input edge of SCK. We recommend using the CLKOUT rising and falling edges to latch the SDO data into the FPGA registers in DDR mode. Since CLKOUT and SDO data is phase aligned, the SDO signals will need to be digitally delayed in the FPGA to provide adequate setup and hold timing margins in DDR mode.

Multiple Data Lanes

The LTC2320-12 has up to eight SDO data lanes in CMOS mode and four SDO lanes in LVDS mode. In CMOS mode, the number of possible data lanes range from eight (SDO1 – SDO8), four (SDO1, SDO3, SDO5 and SDO7), two (SDO1 and SDO5) and one (SDO1). Generally, the more data lanes used, the lower the required SCK frequency. When using less than eight lanes in CMOS mode, there is a limit on the maximum possible conversion frequency (see Table 3). Each SDO pin will hold the MSB of the conversion data. In DDR mode you can use a SCK frequency half the SDR mode. See Table 3 for examples of various possibilities and the resulting SCK frequency required.

Multiple Data Lanes

The LTC2320-12 has up to eight serial data output data lanes in CMOS mode and four serial data output lane pairs in LVDS mode. The data on each lane consists of 12-bit conversion results presented MSB first.

CMOS

In CMOS mode, the number of possible data lanes range from eight (SDO1 – SDO8), four (SDO1, SDO3, SDO5 and SDO7), two (SDO1 and SDO5) and one (SDO1). As suggested in the CMOS Timing Diagrams, each SDO lane outputs the conversion results for all analog input channels in a sequential circular manner. For example, the first conversion result on SDO1 corresponds to analog input channel 1, followed by the conversion results for channels 2 through 8. The data output on SDO1 then wraps back to channel 1 and this pattern repeats indefinitely. Other SDO lanes follow a similar circular pattern except the first conversion result presented on each lane corresponds to its associated analog input channel.

Applications that cannot accommodate the full eight lanes of serial data may employ fewer lanes without reconfiguring the LTC2320-12. For example, capturing the first two conversion results (32 SCK cycles total in SDR mode and 32 SCK edges in DDR mode) from SDO1, SDO3, SDO5, and SDO7 provides data for analog input channels 1 and 2, 3 and 4, 5 and 6, and 7 and 8, respectively, using four output lanes. Similarly, capturing the first four conversion results (64 SCK cycles total in SDR mode and 64 SCK edges in DDR mode) from SDO1 and SDO5 provides data for analog input channels 1 to 4 and 5 to 8, respectively, using two output lanes. If only one lane can be accommodated, capturing the first eight conversion results (128 SCK cycles total in SDR mode and 128 SCK edges in DDR mode) from SDO1 provides data for all analog input channels. Generally, the more data lanes used, the lower the required SCK frequency. When using less than eight lanes in CMOS mode, there is a limit on the maximum possible conversion frequency. See Table 3 for examples of various possibilities and the resulting SCK frequency required.

LVDS

In LVDS mode, the number of possible data lane pairs range from four (SDOA – SDOD), two (SDOA and SDOC) and one (SDOA). As suggested in the LVDS Timing Diagrams, each SDO lane pair outputs the conversion results for all analog input channels in a sequential circular manner.

APPLICATIONS INFORMATION

For example, the first conversion result on SDOA corresponds to analog input channel pair 1 and 2, followed by the conversion results for channels 3 through 8. The data output on SDOA then wraps back to channel 1 and this pattern repeats indefinitely. Other SDO lanes follow a similar circular pattern except the first conversion result presented on each lane corresponds to its associated analog input channel pairs (SDOA: analog inputs 1 and 2, SDOB: analog inputs 3 and 4, SDOC: analog inputs 5 and 6 and SDOD: analog inputs 7 and 8).

Applications that cannot accommodate the full four lanes of serial data may employ fewer lanes without reconfiguring the LTC2320-12. For example, capturing the first four conversion results (64 SCK cycles total in SDR mode and 64 SCK edges in DDR mode) from SDOA and SDOC provides data for analog input channels 1 through 4, and 5 through 8, respectively, using two output lanes. If only one lane can be accommodated, capturing the first eight conversion results (128 SCK cycles total in SDR mode and 128 SCK edges in DDR mode) from SDOA provides data for all analog input channels. Generally, the more data lanes used, the lower the required SCK frequency. When using less than four lanes in LVDS mode, there is a limit on the maximum possible conversion frequency. See Table 3 for examples of various possibilities and the resulting SCK frequency required.

BOARD LAYOUT

To obtain the best performance from the LTC2320-12, a printed circuit board is recommended. Layout for the printed circuit board (PCB) should ensure the digital and analog signal lines are separated as much as possible. In particular, care should be taken not to run any digital clocks or signals adjacent to analog signals or underneath the ADC.

Supply bypass capacitors should be placed as close as possible to the supply pins. Low impedance common returns for these bypass capacitors are essential to the low noise operation of the ADC. A single solid ground plane is recommended for this purpose. When possible, screen the analog input traces using ground.

Recommended Layout

For a detailed look at the reference design for this converter, including schematics and PCB layout, please refer to DC2395A, the evaluation kit for the LTC2320-12.

Table 3. Conversion Frequency for Various I/O Modes

I/O MODE	$\overline{CMOS}$/ LVDS PIN	$\overline{SDR}$/ DDR PIN	SDO1 – 8 LANES	SDOA – D LANES	SCK FREQ (MHz)	CLKOUT FREQ (MHz)	SCK CYCLES	OV_{DD}	CONVERSION FREQUENCY (Msps/CH)
CMOS	GND (CMOS)	GND (SDR)	SDO1 – SDO8		100	100	16	1.8V to 2.5V	1.5
		OV_{DD} (DDR)	SDO1 – SDO8		50	50	8		1.5
		OV_{DD} (DDR)	SDO1, SDO3, SDO5, SDO7		50	50	16		1.25
		GND (SDR)	SDO1		100	100	128		0.5
LVDS	OV_{DD} (LVDS)	GND (SDR)		SDOA – SDOD	200	200	32	2.5V	1.5
		OV_{DD} (DDR)		SDOA – SDOD	100	100	16		1.5
		OV_{DD} (DDR)		SDOA, SDOC	150	150	32		1.4
		GND (SDR)		SDOA	300	300	128		1.0

Notes: Conversion Period (SDR) = $t_{CNV_MIN} + t_{CONV_MAX} + (128/(Lanes \bullet f_{SCK}))$
Conversion Period (DDR) = $t_{CNV_MIN} + t_{CONV_MAX} + (64/(Lanes \bullet f_{SCK}))$
Conversion Frequency = 1/Conversion Period
SCK Cycles (SDR) = 128/Lanes
SCK Cycles (DDR) = 64/Lanes

PACKAGE DESCRIPTION

Please refer to http://www.linear.com/product/LTC2320-12#packaging for the most recent package drawings.

UKG Package
52-Lead Plastic QFN (7mm × 8mm)
(Reference LTC DWG # 05-08-1729 Rev Ø)

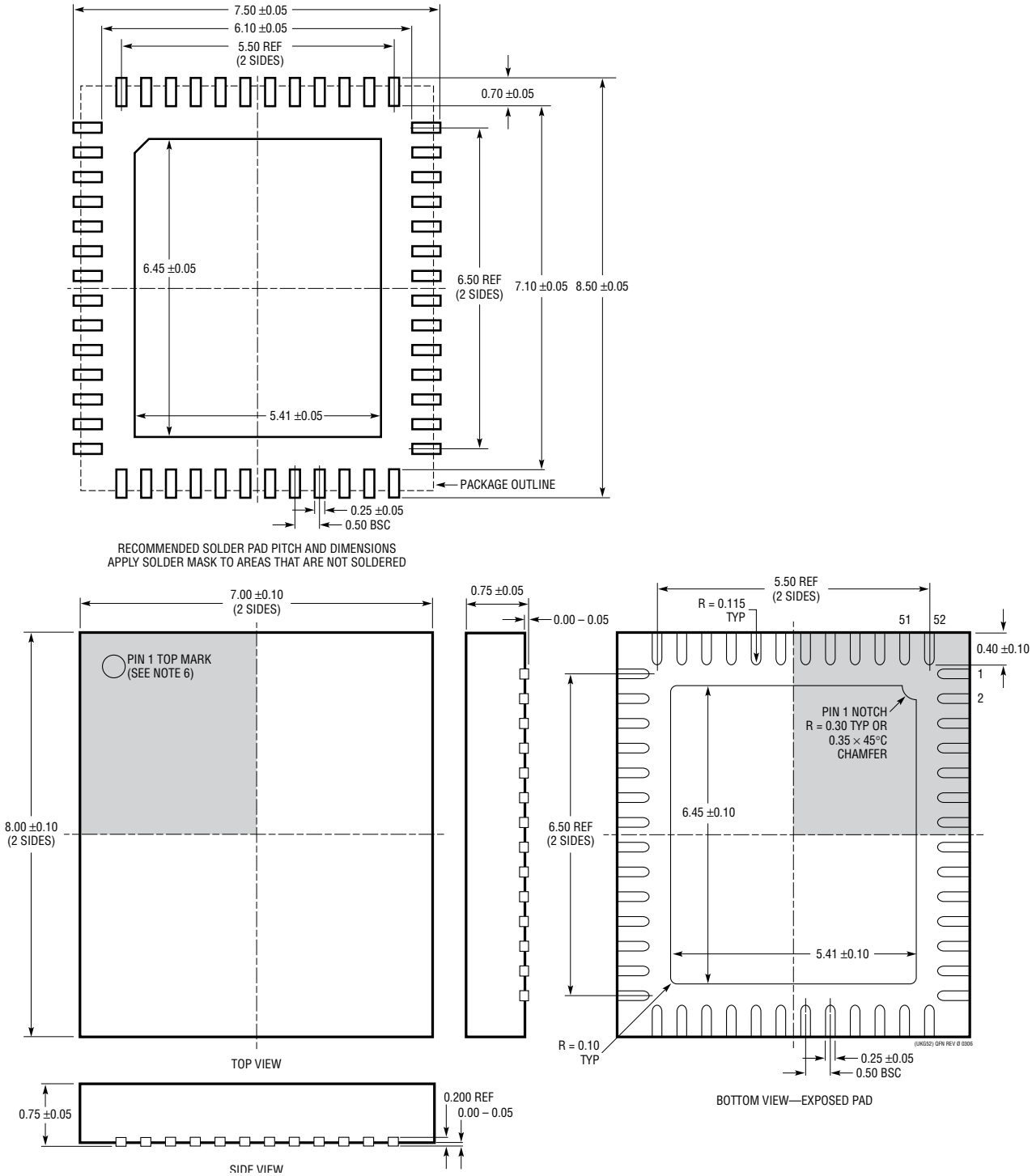

REVISION HISTORY

REV	DATE	DESCRIPTION	PAGE NUMBER
A	02/17	Corrected text to specify no latency	17
B	03/18	Corrected max specs for $P_{D_3.3V}$ and P_{D_5V} in nap mode (missing decimal point)	5

Information furnished by Analog Devices is believed to be accurate and reliable. However, no responsibility is assumed by Analog Devices for its use, nor for any infringements of patents or other rights of third parties that may result from its use. Specifications subject to change without notice. No license is granted by implication or otherwise under any patent or patent rights of Analog Devices.

TYPICAL APPLICATION

Low Jitter Clock Timing with RF Sine Generator Using Clock Squaring/Level-Shifting Circuit and Retiming Flip-Flop

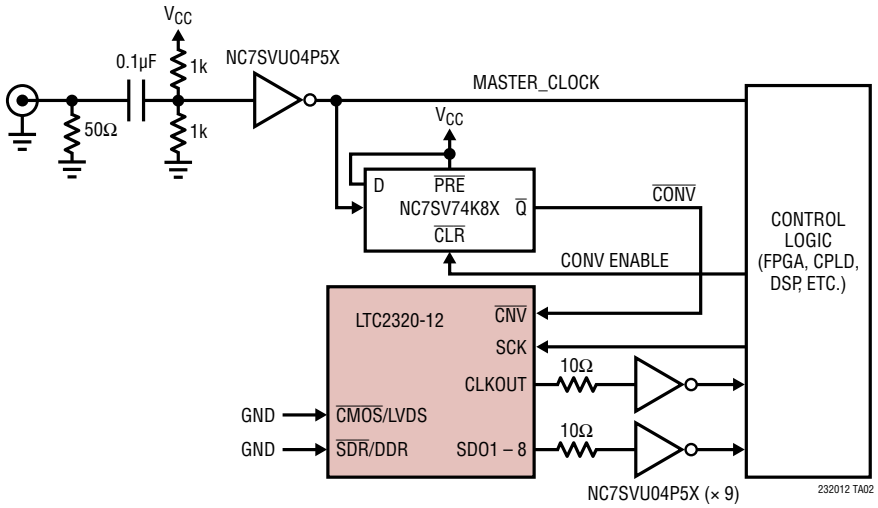

RELATED PARTS

PART NUMBER	DESCRIPTION	COMMENTS
ADCs		
LTC2310-16/LTC2310-14/ LTC2310-12	16-/14-/12-Bit Differential Input ADC with Wide Input Common Mode	3.3V/5V Supply, Single-Channel, 35mW, 20ppm/°C Max Internal Reference, Flexible Inputs, 16-Lead MSOP Package
LTC2321-16/LTC2321-14/ LTC2321-12	Dual 16-/14-/12-Bit, 2Msps/Ch, Simultaneous Sampling ADCs	3.3V/5V Supply, 33mW/Ch, 20ppm°C Max Internal Reference, Flexible Inputs, 4mm × 5mm QFN-28 Package
LTC2324-16/LTC2324-14/ LTC2324-12	Quad 16-/14-/12-Bit 2Msps/Ch Simultaneous Sampling ADCs	3.3V/5V Supply, Single-Channel, 40mW, 20ppm/°C Max Internal Reference, Flexible Inputs, 52-Lead QFN Package
LTC2370-16/LTC2368-16/ LTC2367-16/LTC2364-16	16-Bit, 2Msps/1Msps/500ksps/250ksps Serial, Low Power ADCs	2.5V Supply, Pseudo-Differential Unipolar Input, 94dB SNR, 5V Input Range, DGC, Pin-Compatible Family in MSOP-16 and 4mm × 3mm DFN-16 Packages
LTC2380-16/LTC2378-16/ LTC2377-16/LTC2376-16	16-Bit, 2Msps/1Msps/500ksps/250ksps Serial, Low Power ADCs	2.5V Supply, Differential Input, 96.2dB SNR, ±5V Input Range, DGC, Pin-Compatible Family in MSOP-16 and 4mm × 3mm DFN-16 Packages
DACs		
LTC2632	Dual 12-/10-/8-Bit, SPI V_{OUT} DACs with Internal Reference	2.7V to 5.5V Supply Range, 10ppm/°C Reference, External REF Mode, Rail-to-Rail Output, 8-Pin ThinSOT™ Package
LTC2602/LTC2612/ LTC2622	Dual 16-/14-/12-Bit SPI V_{OUT} DACs with External Reference	300µA per DAC, 2.5V to 5.5V Supply Range, Rail-to-Rail Output, 8-Lead MSOP Package
References		
LTC6655	Precision Low Drift, Low Noise Buffered Reference	5V/4.096V/3.3V/3V/2.5V/2.048V/1.25V, 2ppm/°C, 0.25ppm Peak-to-Peak Noise, MSOP-8 Package
LTC6652	Precision Low Drift, Low Noise Buffered Reference	5V/4.096V/3.3V/3V/2.5V/2.048V/1.25V, 5ppm/°C, 2.1ppm Peak-to-Peak Noise, MSOP-8 Package
Amplifiers		
LT1818/LT1819	400MHz, 2500V/µs, 9mA Single/Dual Operational Amplifiers	–85dBc Distortion at 5MHz, 6nV/√Hz Input Noise Voltage, 9mA Supply Current, Unity-Gain Stable
LT1806	325MHz, Single, Rail-to-Rail Input and Output, Low Distortion, Low Noise Precision Op Amps	–80dBc Distortion at 5MHz, 3.5nV/√Hz Input Noise Voltage, 9mA Supply Current, Unity-Gain Stable
LT6200	165MHz, Rail-to-Rail Input and Output, 0.95nV/√Hz Low Noise, Op Amp Family	Low Noise, Low Distortion, Unity-Gain Stable

© ANALOG DEVICES, INC. 2017-18

Мы молодая и активно развивающаяся компания в области поставок электронных компонентов. Мы поставляем электронные компоненты отечественного и импортного производства напрямую от производителей и с крупнейших складов мира.

Благодаря сотрудничеству с мировыми поставщиками мы осуществляем комплексные и плановые поставки широчайшего спектра электронных компонентов.

Собственная эффективная логистика и склад в обеспечивает надежную поставку продукции в точно указанные сроки по всей России.

Мы осуществляем техническую поддержку нашим клиентам и предпродажную проверку качества продукции. На все поставляемые продукты мы предоставляем гарантию .

Осуществляем поставки продукции под контролем ВП МО РФ на предприятия военно-промышленного комплекса России , а также работаем в рамках 275 ФЗ с открытием отдельных счетов в уполномоченном банке. Система менеджмента качества компании соответствует требованиям ГОСТ ISO 9001.

Минимальные сроки поставки, гибкие цены, неограниченный ассортимент и индивидуальный подход к клиентам являются основой для выстраивания долгосрочного и эффективного сотрудничества с предприятиями радиоэлектронной промышленности, предприятиями ВПК и научно-исследовательскими институтами России.

С нами вы становитесь еще успешнее!

Наши контакты:

Телефон: +7 812 627 14 35

Электронная почта: sales@st-electron.ru

Адрес: 198099, Санкт-Петербург, Промышленная ул, дом № 19, литера Н, помещение 100-Н Офис 331