# Dual, High Voltage, Current Shunt Monitor

Data Sheet

# AD8213

## FEATURES

- ±4000 V human body model (HBM) ESD
- High common-mode input voltage range
  - −2 V to +65 V operating
  - −3 V to +68 V survival
- Buffered output voltage
- Wide operating temperature range
  - −40°C to +125°C for Y grade
  - −40°C to +150°C for H grade
- Excellent ac and dc performance
  - −10 ppm/°C typical gain drift
  - 120 dB typical CMRR at dc
- Qualified for automotive applications

## APPLICATIONS

- High-side current sensing
  - Motor controls
  - Transmission controls
  - Diesel injection controls
  - Engine management
  - Suspension controls
  - Vehicle dynamic controls
  - DC to DC converters

## FUNCTIONAL BLOCK DIAGRAM

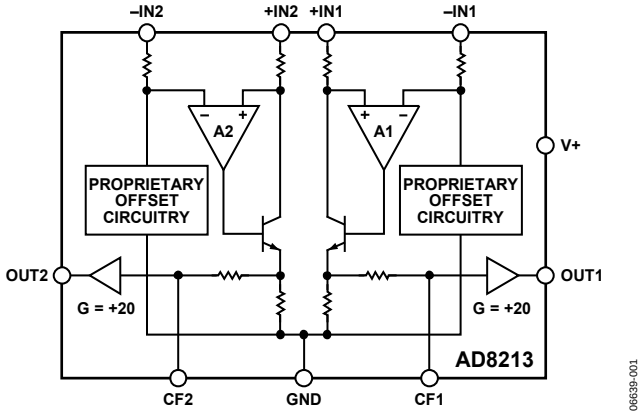


*Figure 1.*

## GENERAL DESCRIPTION

The AD8213 is a dual-channel, precision current sense amplifier. It features a set gain of 20 V/V, with a maximum ±0.5% gain error over the entire temperature range. The buffered output voltage directly interfaces with any typical converter. Excellent common-mode rejection from −2 V to +65 V, is independent of the 5 V supply. The AD8213 performs unidirectional current measurements across a shunt resistor in a variety of industrial and automotive applications, such as motor control, solenoid control, or battery management.

Special circuitry is devoted to output linearity being maintained throughout the input differential voltage range of 0 mV to 250 mV, regardless of the common-mode voltage present. The AD8213 also features additional pins that allow the user to low-pass filter the input signal before amplifying, via an external capacitor to ground. The AD8213 has an operating temperature range of −40°C to +125°C for the Y grade, −40°C to +150°C for the H grade and is offered in a small 10-lead MSOP package.

Rev. D

Document Feedback

Information furnished by Analog Devices is believed to be accurate and reliable. However, no responsibility is assumed by Analog Devices for its use, nor for any infringements of patents or other rights of third parties that may result from its use. Specifications subject to change without notice. No license is granted by implication or otherwise under any patent or patent rights of Analog Devices. Trademarks and registered trademarks are the property of their respective owners.

One Technology Way, P.O. Box 9106, Norwood, MA 02062-9106, U.S.A.
Tel: 781.329.4700
©2007–2016 Analog Devices, Inc. All rights reserved.
Technical Support
www.analog.com

# TABLE OF CONTENTS

Features ... 1
Applications ... 1
Functional Block Diagram ... 1
General Description ... 1
Revision History ... 2
Specifications ... 3
Absolute Maximum Ratings ... 4
ESD Caution ... 4
Pin Configuration and Function Descriptions ... 5
Typical Performance Characteristics ... 6
Theory of Operation ... 10
Application Notes ... 11
Output Linearity ... 11
Low-Pass Filtering ... 11
Applications Information ... 12
High-Side Current Sense with a Low-Side Switch ... 12
High-Side Current Sensing ... 12
Low-Side Current Sensing ... 12
Bidirectional Current Sensing ... 13
Outline Dimensions ... 14
Ordering Guide ... 14
Automotive Products ... 14

## REVISION HISTORY

**12/2016—Rev. C to Rev. D**

Changes to Features Section ... 1
Changes to Table 1 ... 3
Changes to Figure 30 ... 12
Change to Ordering Guide ... 14
Add Automotive Products Section ... 14

**10/2013—Rev. B to Rev. C**

Changed Offset Voltage (RTI) Parameter from ±1 mV Maximum to ±1 mV Typical, Table 1 ... 3

**4/2013—Rev. A to Rev. B**

Added H Grade (Throughout) ... 1
Changes to Table 1 ... 3
Added AD8213WH Temperature Range, Table 2 ... 4
Updated Outline Dimensions ... 14
Changes to Ordering Guide ... 14

**5/2009—Rev. 0 to Rev. A**

Changes to Ordering Guide ... 14

**5/2007—Revision 0: Initial Version**

# SPECIFICATIONS

$T_{OPR}$ = operating temperature range, $V_S$ = 5 V, $R_L$ = 25 kΩ ($R_L$ is the output load resistor), unless otherwise noted.

**Table 1.**

| Parameter | Test Conditions/Comments | Min | Typ | Max | Unit |
|---|---|---|---|---|---|
| GAIN | | | | | |
| Initial | | | 20 | | V/V |
| Accuracy | Output voltage ($V_O$) ≥ 0.1 V dc | | ±0.25 | | % |
| Accuracy over Temperature | $T_{OPR}$ | | | ±0.5 | % |
| Gain vs. Temperature | | 0 | −10 | −25 | ppm/°C |
| VOLTAGE OFFSET | | | | | |
| Offset Voltage (Referred to Input, RTI) | 25°C | | ±1 | | mV |
| Over Temperature (RTI) | $T_{OPR}$ | | | ±2.2 | mV |
| Offset Drift | $T_{OPR}$ | | | ±12 | μV/°C |
| INPUT | | | | | |
| Input Impedance | | | | | |
| Differential | | | 5 | | kΩ |
| Common Mode | Common mode voltage > 5 V | | 5 | | MΩ |
| | Common mode voltage < 5 V | | 3.5 | | kΩ |
| Common-Mode Input Voltage Range | Common-mode continuous | −2 | | +65 | V |
| Differential Input Voltage Range | Differential input voltage | | 250 | | mV |
| Common-Mode Rejection | $T_{OPR}$, f = dc, $V_{CM}$ > 5 V (see Figure 5) | 100 | 120 | | dB |
| | $T_{OPR}$, f = dc, $V_{CM}$ < 5 V (see Figure 5) | 80 | 90 | | dB |
| OUTPUT | | | | | |
| Output Voltage Range Low | AD8213Y, AD8213WY | 0.1 | 0.05 | | V |
| | AD8213WH | 0.15 | | | V |
| Output Voltage Range High | AD8213Y, AD8213WY | | 4.95 | 4.9 | V |
| | AD8213WH | | | 4.88 | V |
| Output Impedance | | | 2 | | Ω |
| FILTER RESISTOR | $C_F$ access to resistor for low-pass filter | 18 | 20 | 22 | kΩ |
| DYNAMIC RESPONSE | | | | | |
| Small Signal −3 dB Bandwidth | | | 500 | | kHz |
| Slew Rate | $C_{OUT}$ = 20 pF, no filter capacitor ($C_F$) | | 4.5 | | V/μs |
| | Output capacitance ($C_{OUT}$) = 20 pF, $C_F$ = 20 pF | | 2.7 | | V/μs |
| NOISE | | | | | |
| 0.1 Hz to 10 Hz, RTI | | | 7 | | μV p-p |
| Spectral Density, 1 kHz, RTI | | | 70 | | nV/√Hz |
| POWER SUPPLY | | | | | |
| Operating Range | | 4.5 | | 5.5 | V |
| Quiescent Current Over Temperature | $V_{CM}$ > 5 V, per amplifier[1], total supply current for two channels | | | | |
| | AD8213Y, AD8213WY | | 2.5 | 3.75 | mA |
| | AD8213WH | | | 4.5 | mA |
| Power Supply Rejection Ratio | AD8213Y, AD8213WY | 76 | | | dB |
| | AD8213WH | 74 | | | dB |
| TEMPERATURE RANGE | | | | | |
| For Specified Performance | AD8213Y, AD8213WY | −40 | | +125 | °C |
| | AD8213WH | −40 | | +150 | °C |

[1] When the common-mode input is less than 5 V, the supply current increases, which can be calculated by $I_S = -0.52 \times (V_{CM}) + 4.9$ (see Figure 11).

# ABSOLUTE MAXIMUM RATINGS

**Table 2.**

| Parameter | Rating |
|---|---|
| Supply Voltage | 12.5 V |
| Continuous Input Voltage (Survival) | −3 V to +68 V |
| Reverse Supply Voltage | −0.3 V |
| ESD Rating | |
| HBM | ±4000 V |
| Charged Device Model (CDM) | ±1000 V |
| Operating Temperature Range | |
| AD8213Y, AD8213WY | −40°C to +125°C |
| AD8213WH | −40°C to +150°C |
| Storage Temperature Range | −65°C to +150°C |
| Output Short-Circuit Duration | Indefinite |

Stresses at or above those listed under Absolute Maximum Ratings may cause permanent damage to the product. This is a stress rating only; functional operation of the product at these or any other conditions above those indicated in the operational section of this specification is not implied. Operation beyond the maximum operating conditions for extended periods may affect product reliability.

## ESD CAUTION

**ESD (electrostatic discharge) sensitive device.** Charged devices and circuit boards can discharge without detection. Although this product features patented or proprietary protection circuitry, damage may occur on devices subjected to high energy ESD. Therefore, proper ESD precautions should be taken to avoid performance degradation or loss of functionality.

# PIN CONFIGURATION AND FUNCTION DESCRIPTIONS

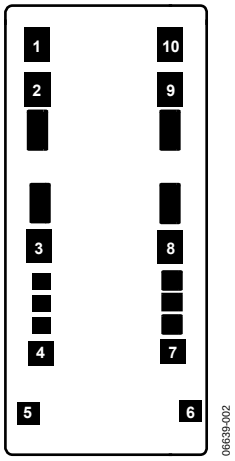


*Figure 2. Metallization Diagram*

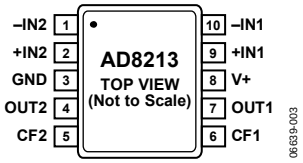


*Figure 3. Pin Configuration*

**Table 3. Pin Function Descriptions**

| Pin No. | Mnemonic | X | Y | Description |
|---|---|---|---|---|
| 1 | –IN2 | –401 | +677 | Inverting Input of the Second Channel. |
| 2 | +IN2 | –401 | +510 | Noninverting Input of the Second Channel. |
| 3 | GND | –401 | –53 | Ground. |
| 4 | OUT2 | –394 | –500 | Output of the Second Channel. |
| 5 | CF2 | –448 | –768 | Low-Pass Filter Pin for the Second Channel. |
| 6 | CF1 | +448 | –768 | Low-Pass Filter Pin for the First Channel. |
| 7 | OUT1 | +394 | –500 | Output of the First Channel. |
| 8 | V+ | +401 | –61 | Supply. |
| 9 | +IN1 | +401 | +510 | Noninverting Input of the First Channel. |
| 10 | –IN1 | +401 | +677 | Inverting Input of the First Channel. |

# TYPICAL PERFORMANCE CHARACTERISTICS

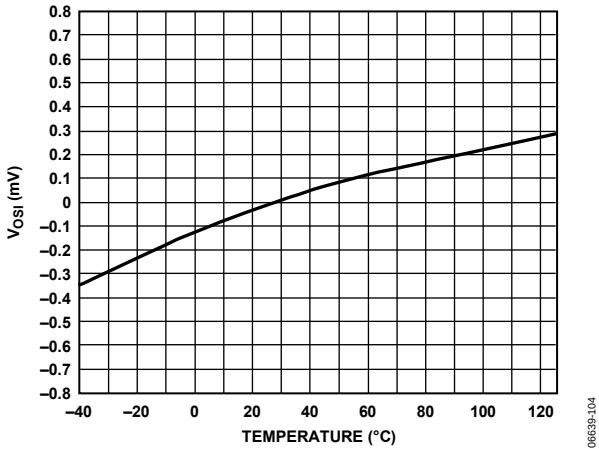


*Figure 4. Typical Offset Drift ($V_{OSI}$)*

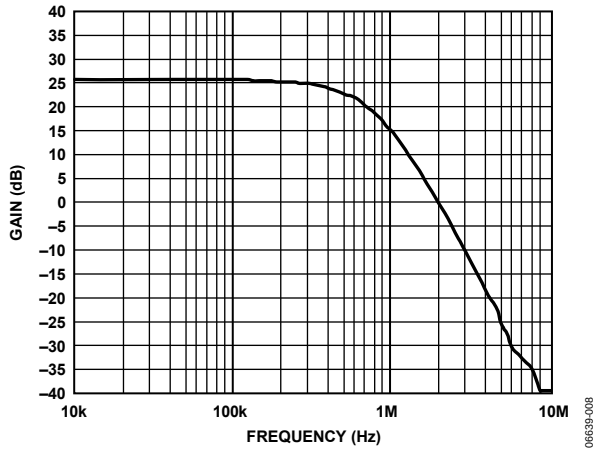


*Figure 7. Typical Small Signal Bandwidth, $V_{OUT}$ = 200 mV p-p*

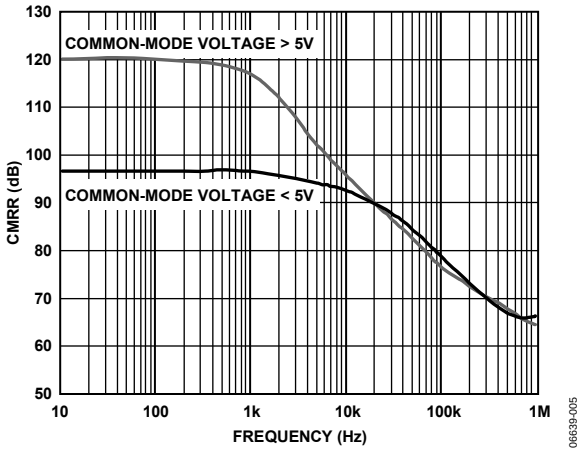


*Figure 5. CMRR vs. Frequency*

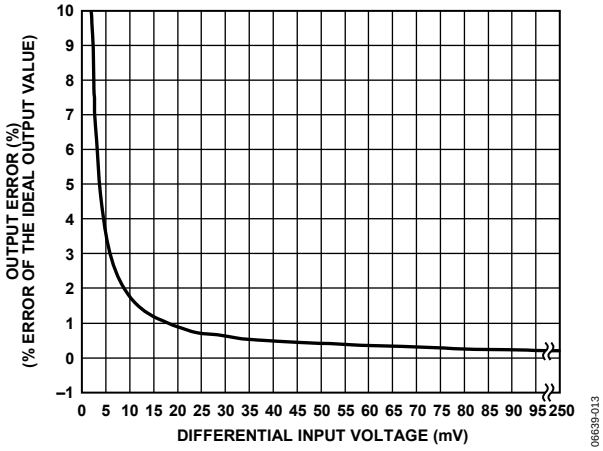


*Figure 8. Total Output Error vs. Differential Input Voltage*

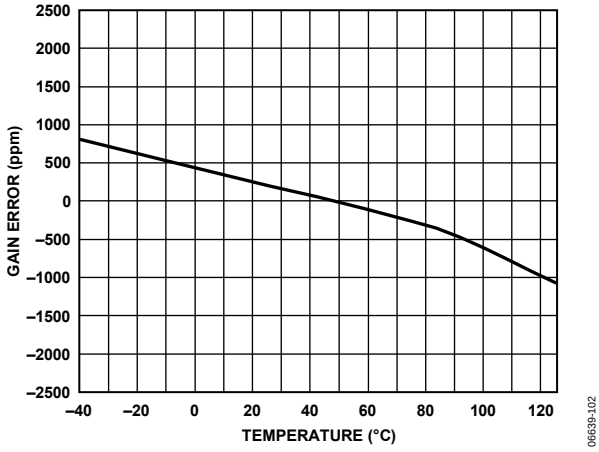


*Figure 6. Typical Gain Drift*

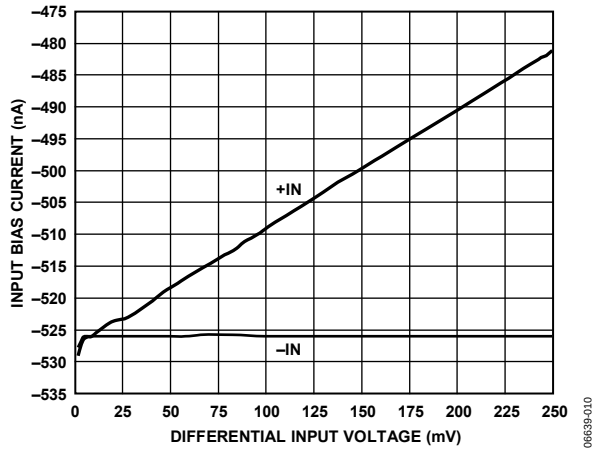


*Figure 9. Input Bias Current vs. Differential Input Voltage, $V_{CM}$ = 0 V, Per Channel*

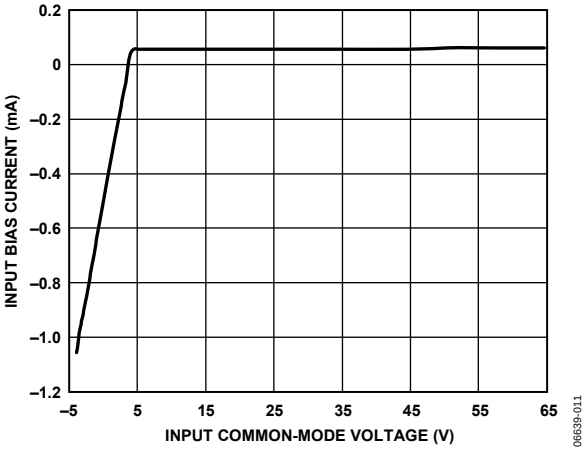


*Figure 10. Input Bias Current vs. Input Common-Mode Voltage Per Input*

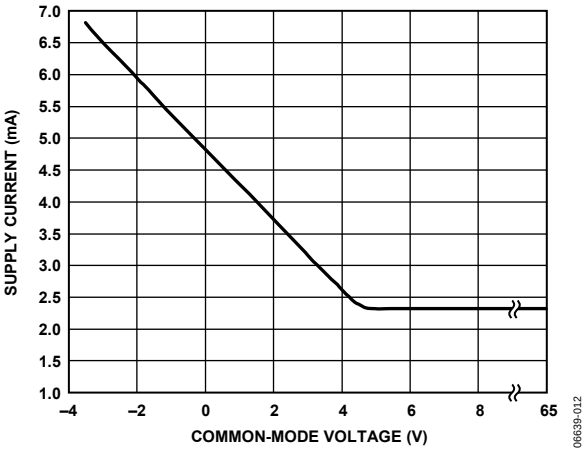


*Figure 11. Supply Current vs. Common-Mode Voltage*

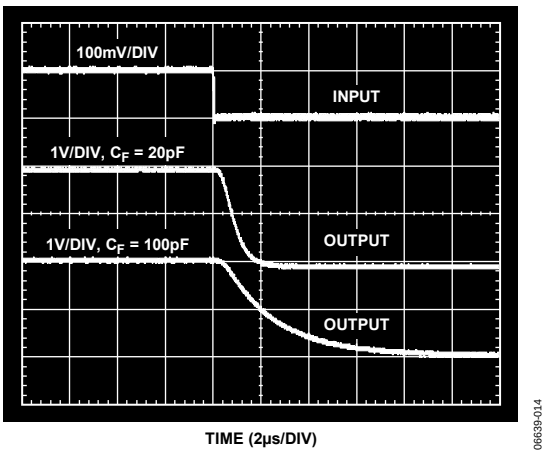


*Figure 12. Fall Time*

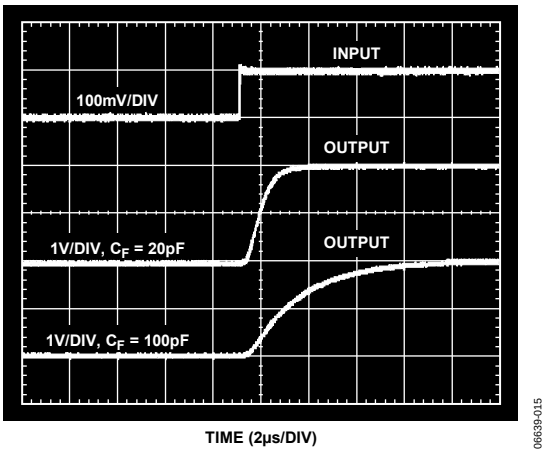


*Figure 13. Rise Time*

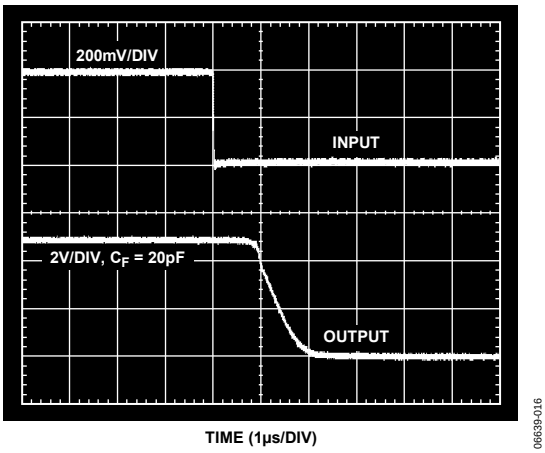


*Figure 14. Differential Overload Recovery (Falling)*

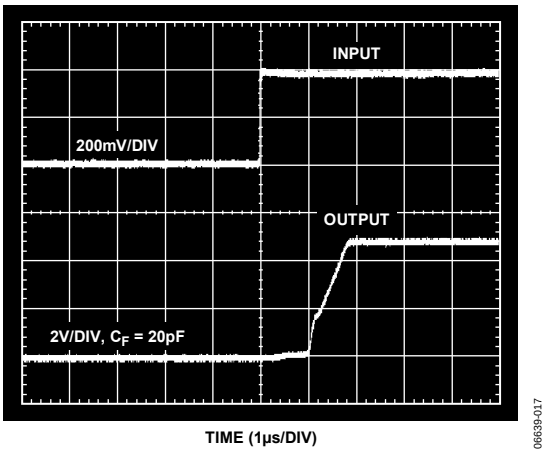


*Figure 15. Differential Overload Recovery (Rising)*

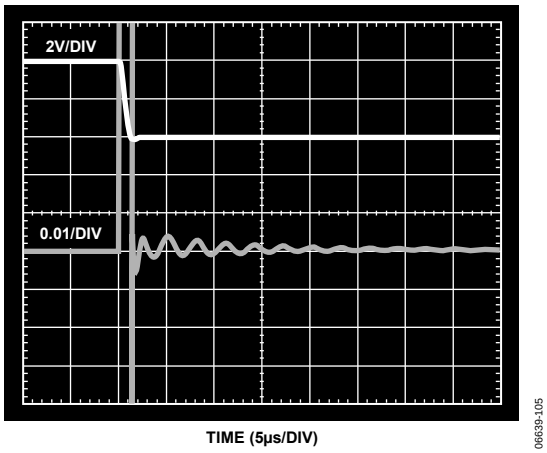


Figure 16. Settling Time (Falling)

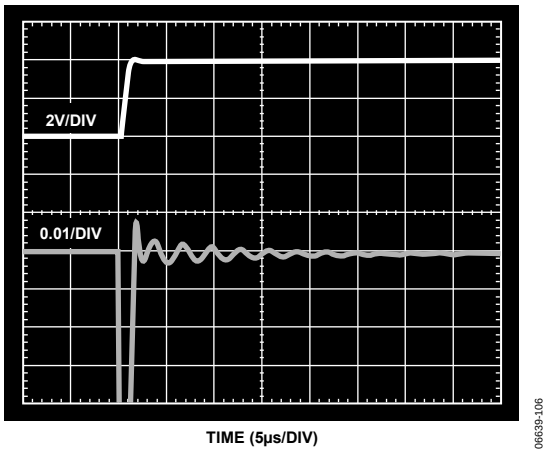


Figure 17. Settling Time (Rising)

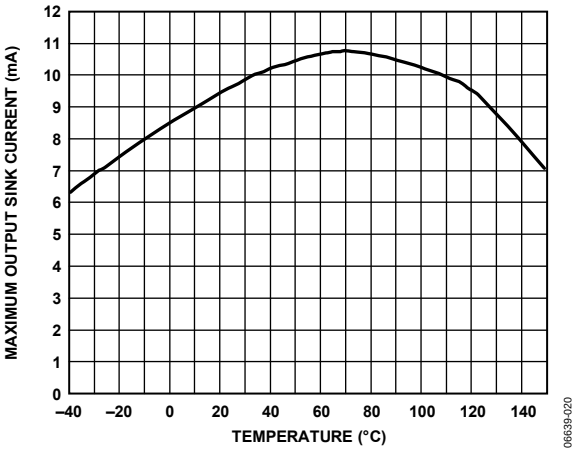


Figure 18. Maximum Output Sink Current vs. Temperature Per Channel

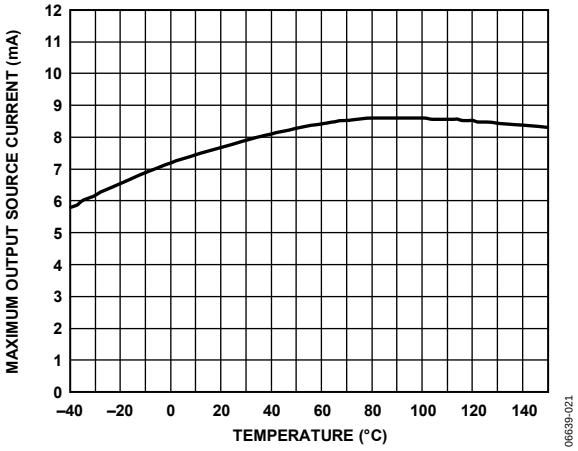


Figure 19. Maximum Output Source Current vs. Temperature Per Channel

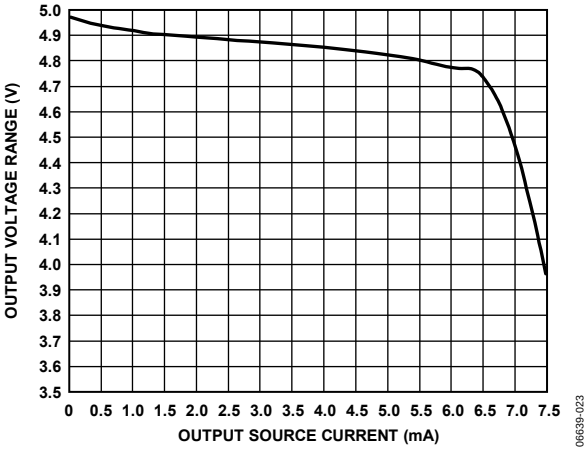


Figure 20. Output Voltage Range vs. Output Source Current Per Channel

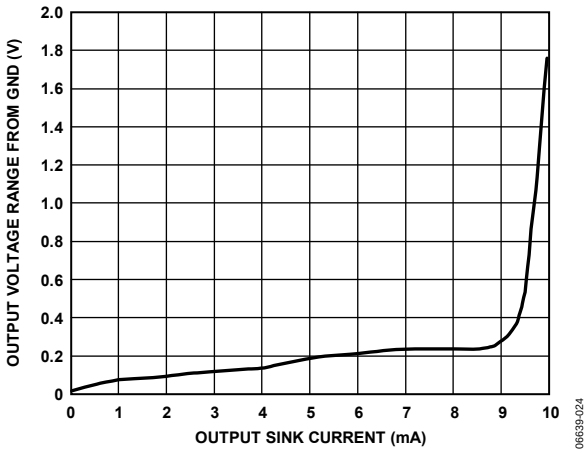


Figure 21. Output Voltage Range from GND vs. Output Sink Current Per Channel

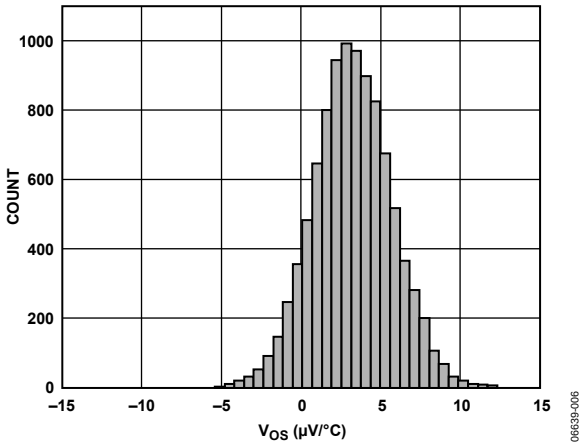


*Figure 22. Offset Drift Distribution ($V_{OS}$), Temperature Range = −40°C to +125°C*

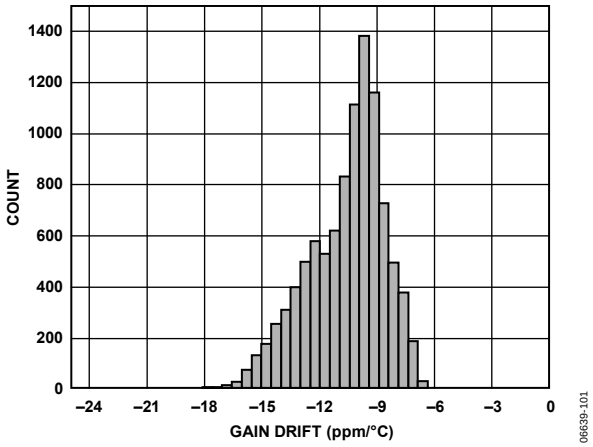


*Figure 23. Gain Drift Distribution, Temperature Range = −40°C to +125°C*

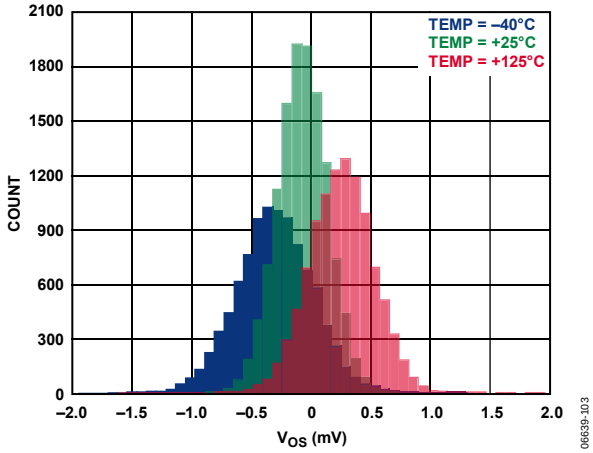


*Figure 24. Offset Distribution ($V_{OS}$), $V_{CM}$ = 6 V*

# THEORY OF OPERATION

In typical applications, the AD8213 amplifies a small differential input voltage generated by the load current flowing through a shunt resistor. The AD8213 rejects high common-mode voltages (up to 65 V) and provides a ground referenced, buffered output that interfaces with an analog-to-digital converter (ADC). Figure 25 shows a simplified schematic of the AD8213.

The following explanation refers exclusively to Channel 1 of the AD8213; however, the same explanation applies to Channel 2.

A load current flowing through the external shunt resistor produces a voltage at the input terminals of the AD8213. The input terminals are connected to Amplifier A1 by Resistor R1 (1) and Resistor R1 (2). The inverting terminal, which has very high input impedance is held to ($V_{CM}$) − ($I_{SHUNT}$ × $R_{SHUNT}$), because negligible current flows through Resistor R1 (2). Amplifier A1 forces the noninverting input to the same potential. Therefore, the current that flows through Resistor R1 (1), is equal to

$$I_{IN1} = (I_{SHUNT1} \times R_{SHUNT1})/R1_{(1)}$$

This current ($I_{IN1}$) is converted back to a voltage via $R_{OUT1}$. The output buffer amplifier has a gain of 20 V/V, and offers excellent accuracy as the internal gain setting resistors are precision trimmed to within 0.01% matching. The resulting output voltage is equal to

$$V_{OUT1} = (I_{SHUNT1} \times R_{SHUNT1}) \times 20$$

Prior to the buffer amplifier, a precision trimmed, 20 kΩ resistor can perform the low-pass filtering of the input signal prior to the amplification stage. By using this resistor, the noise of the input signal does not amplify but is rejected, resulting in a more precise output signal that directly interfaces with a converter. A capacitor from the CF1 pin to GND, results in a low-pass filter with a corner frequency of

$$f_{-3dB} = \frac{1}{2\pi(20000)C_{FILTER}}$$

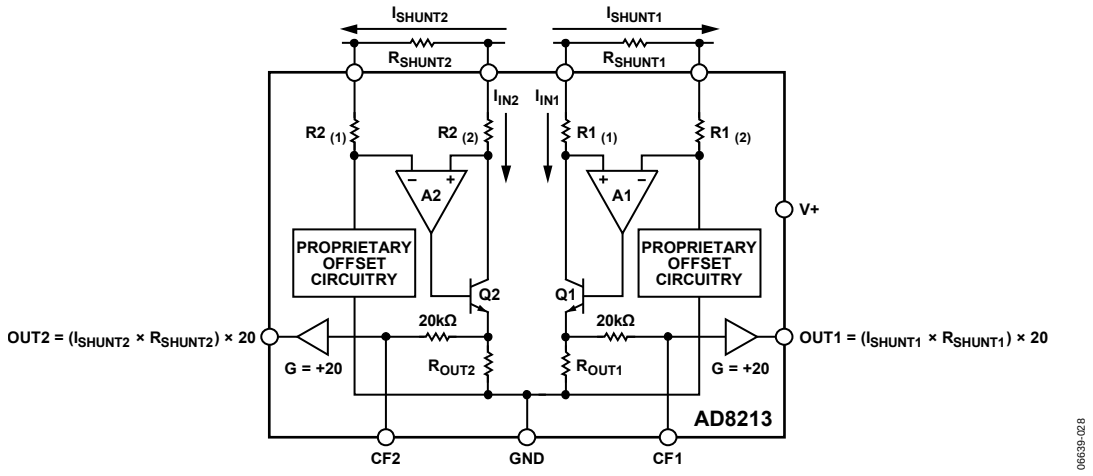


*Figure 25. Simplified Schematic*

# APPLICATION NOTES

## OUTPUT LINEARITY

In all current sensing applications, and especially in automotive and industrial environments where the common-mode voltage can vary significantly, it is important that the current sensor maintain the specified output linearity, regardless of the input differential or common-mode voltage. The AD8213 contains specific circuitry on the input stage, which ensures that even when the differential input voltage is very small, and the common-mode voltage is also low (below the 5 V supply), the input to output linearity is maintained. Figure 26 displays the input differential voltage vs. the corresponding output voltage at different common modes.

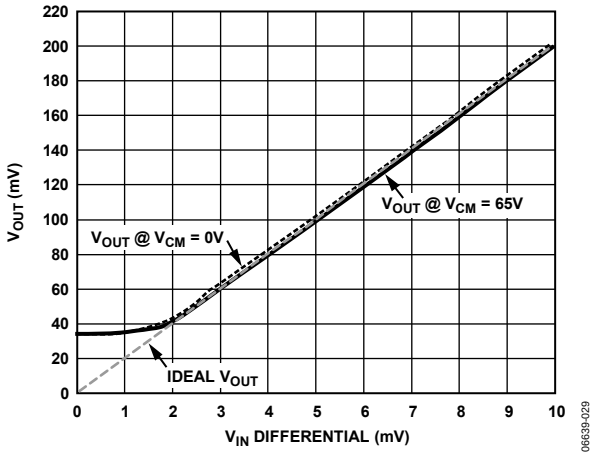


*Figure 26. Gain Linearity due to Differential and Common-Mode Voltage*

The AD8213 provides a correct output voltage, regardless of the common mode, when the input differential is at least 2 mV, which is due to the voltage range of the output amplifier that can go as low as 33 mV typical. The specified minimum output amplifier voltage is 100 mV in order to provide sufficient guard bands. The ability of the AD8213 to work with very small differential inputs regardless of the common-mode voltage, allows more dynamic range, accuracy, and flexibility in any current sensing application.

## LOW-PASS FILTERING

In typical applications, such as motor and solenoid current sensing, filtering the differential input signal of the AD8213 can be beneficial in reducing differential common-mode noise as well as transients and current ripples flowing through the input shunt resistor. Typically, such a filter can be implemented by adding a resistor in series with each input and a capacitor directly between the input pins. However, the AD8213 features a filter pin available after the input stage but before the final amplification stage. The user can connect a capacitor to ground, making a low-pass filter with the internal precision trimmed, 20 kΩ resistor. Connecting this capacitor to ground, results in no gain or CMRR errors. Figure 27 shows the typical connection.

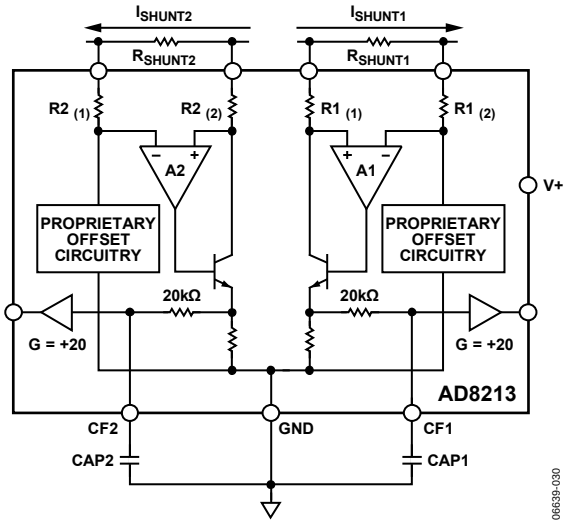


*Figure 27. Filter Capacitor Connections*

Use the following formula to calculate the 3 dB frequency of this low-pass filter:

$$f_{-3dB} = \frac{1}{2\pi(20000)C_{FILTER}}$$

It is recommended to always place a capacitor from the filter pin to GND to prevent the output chatter due to noise potentially entering through the filter pin and coupling to the output. This capacitor can be a ≈20 pF capacitor in cases when all of the bandwidth of the AD8213 is needed in the application.

# APPLICATIONS INFORMATION

## HIGH-SIDE CURRENT SENSE WITH A LOW-SIDE SWITCH

In such load control configurations, the PWM controlled switch is ground referenced. An inductive load (solenoid) is tied to a power supply. A resistive shunt is placed between the switch and the load (see Figure 28). An advantage of placing the shunt on the high side is that the entire current, including the recirculation current, can be measured because the shunt remains in the loop when the switch is off. In addition, diagnostics can be enhanced because shorts to ground can be detected with the shunt on the high side. In this circuit configuration, when the switch is closed, the common-mode voltage moves down to near the negative rail. When the switch is opened, the voltage reversal across the inductive load causes the common-mode voltage to be held one diode drop above the battery by the clamp diode.

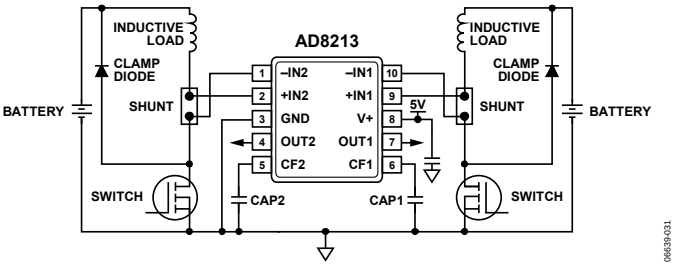


*Figure 28. Low-Side Switch*

## HIGH-SIDE CURRENT SENSING

In this configuration, the shunt resistor is referenced to the battery. High voltage is present at the inputs of the current sense amplifier. In this mode, the recirculation current is measured again and shorts to ground can be detected. When the shunt is battery referenced, the AD8213 produces a linear ground referenced analog output. An AD8214 can also provide an overcurrent detection signal in as little as 100 ns. This feature is useful in high current systems where fast shutdown in overcurrent conditions is essential.

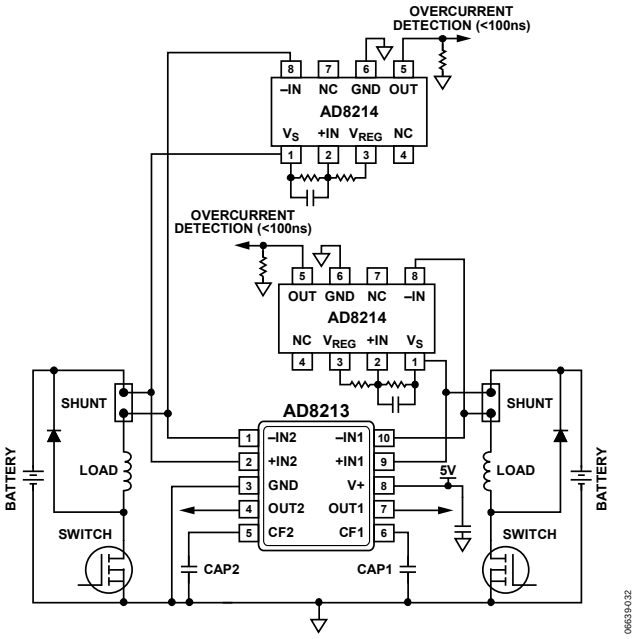


*Figure 29. Battery Referenced Shunt Resistor*

## LOW-SIDE CURRENT SENSING

In systems where low-side current sensing is preferred, the AD8213 provides an integrated solution with great accuracy. Ground noise is rejected, CMRR is typical higher than 90 dB, and output linearity is not compromised, regardless of the input differential voltage.

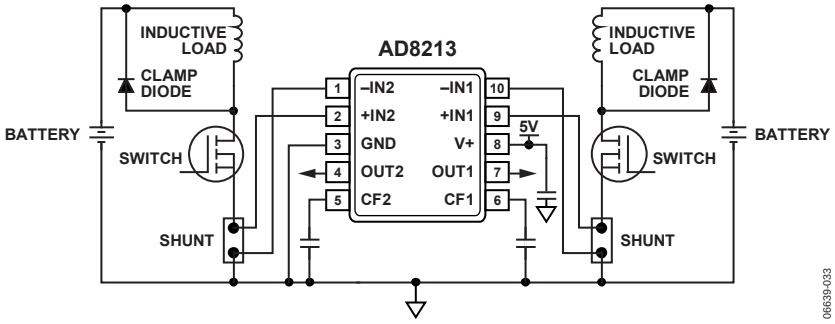


*Figure 30. Ground Referenced Shunt Resistor*

## BIDIRECTIONAL CURRENT SENSING

The AD8213 can also be configured to sense current in both directions at the inputs. This configuration is useful in charge/discharge applications. A typical connection diagram is shown in Figure 31. In this mode, Channel 1 monitors $I_{LOAD}$, and Channel 2 monitors $I_{CHARGE}$.

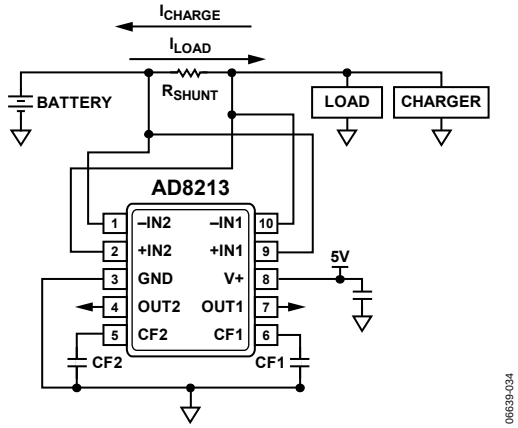


*Figure 31. Bidirectional Current Sensing*

For applications requiring a bidirectional current measurement, an optimal solution can be using a single channel device, which offers the same functionality as the previous circuit. The AD8210 is a single channel current sensor featuring bidirectional capability. The typical connection diagram for the AD8210 in bidirectional applications is shown in Figure 32.

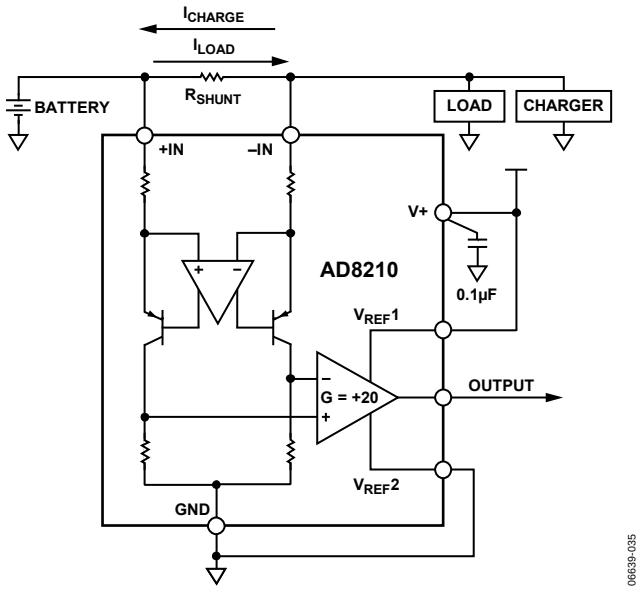


*Figure 32. AD8210 in Bidirectional Applications*

# OUTLINE DIMENSIONS

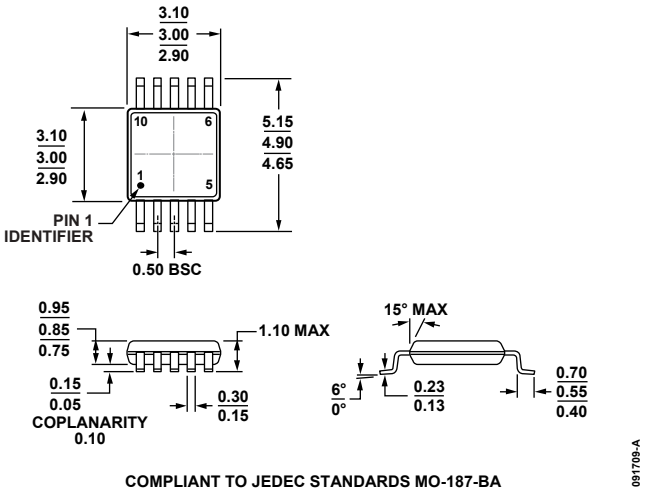


*Figure 33. 10-Lead Mini Small Outline Package [MSOP] (RM-10)*
*Dimensions shown in millimeters*

## ORDERING GUIDE

| Model[1, 2] | Temperature Range | Package Description | Package Option | Branding |
|---|---|---|---|---|
| AD8213YRMZ | −40°C to +125°C | 10-Lead Mini Small Outline Package [MSOP] | RM-10 | H0U |
| AD8213YRMZ-RL | −40°C to +125°C | 10-Lead Mini Small Outline Package [MSOP], 13″Tape and Reel | RM-10 | H0U |
| AD8213YRMZ-R7 | −40°C to +125°C | 10-Lead Mini Small Outline Package [MSOP], 7″Tape and Reel | RM-10 | H0U |
| AD8213WYRMZ | −40°C to +125°C | 10-Lead Mini Small Outline Package [MSOP] | RM-10 | Y2B |
| AD8213WYRMZ-RL | −40°C to +125°C | 10-Lead Mini Small Outline Package [MSOP], 13″Tape and Reel | RM-10 | Y2B |
| AD8213WYRMZ-R7 | −40°C to +125°C | 10-Lead Mini Small Outline Package [MSOP], 7″Tape and Reel | RM-10 | Y2B |
| AD8213WHRMZ | −40°C to +150°C | 10-Lead Mini Small Outline Package [MSOP] | RM-10 | Y5C |
| AD8213WHRMZ-RL | −40°C to +150°C | 10-Lead Mini Small Outline Package [MSOP], 13″Tape and Reel | RM-10 | Y5C |
| AD8213WHRMZ-R7 | −40°C to +150°C | 10-Lead Mini Small Outline Package [MSOP], 7″Tape and Reel | RM-10 | Y5C |

[1] Z = RoHS Compliant Part.
[2] W = Qualified for Automotive Applications.

## AUTOMOTIVE PRODUCTS

The AD8213W models are available with controlled manufacturing to support the quality and reliability requirements of automotive applications. Note that these automotive models may have specifications that differ from the commercial models; therefore, designers should review the Specifications section of this data sheet carefully. Only the automotive grade products shown are available for use in automotive applications. Contact your local Analog Devices account representative for specific product ordering information and to obtain the specific Automotive Reliability reports for these models.

©2007–2016 Analog Devices, Inc. All rights reserved. Trademarks and registered trademarks are the property of their respective owners.
D06639-0-12/16(D)

Мы молодая и активно развивающаяся компания в области поставок электронных компонентов. Мы поставляем электронные компоненты отечественного и импортного производства напрямую от производителей и с крупнейших складов мира.

Благодаря сотрудничеству с мировыми поставщиками мы осуществляем комплексные и плановые поставки широчайшего спектра электронных компонентов.

Собственная эффективная логистика и склад в обеспечивает надежную поставку продукции в точно указанные сроки по всей России.

Мы осуществляем техническую поддержку нашим клиентам и предпродажную проверку качества продукции. На все поставляемые продукты мы предоставляем гарантию .

Осуществляем поставки продукции под контролем ВП МО РФ на предприятия военно-промышленного комплекса России , а также работаем в рамках 275 ФЗ с открытием отдельных счетов в уполномоченном банке. Система менеджмента качества компании соответствует требованиям ГОСТ ISO 9001.

Минимальные сроки поставки, гибкие цены, неограниченный ассортимент и индивидуальный подход к клиентам являются основой для выстраивания долгосрочного и эффективного сотрудничества с предприятиями радиоэлектронной промышленности, предприятиями ВПК и научно-исследовательскими институтами России.

С нами вы становитесь еще успешнее!

**Наши контакты:**

**Телефон:** +7 812 627 14 35

**Электронная почта:** sales@st-electron.ru

**Адрес:** 198099, Санкт-Петербург, Промышленная ул, дом № 19, литера Н, помещение 100-Н Офис 331