# Si8239x Data Sheet

## 4.0 A ISODrivers with 2.5 V VDDI and Safety Features

The Si8239x combines two isolated drivers with either an independent input control or a single input into a single package for high power applications. All drivers operate with a 2.5 V input VDD and a maximum drive supply voltage of 24 V.

The Si8239x isolators are ideal for driving power MOSFETs and IGBTs used in a wide variety of switched power and motor control applications. These drivers utilize Silicon Laboratories' proprietary silicon isolation technology, supporting up to 5 kVRMS withstand voltage. This technology enables high CMTI (100 kV/µs), lower prop delays and skew, reduced variation with temperature and age and tighter part-to-part matching.

It also offers some unique features such as an output UVLO fault detection and feedback, and automatic shutdown for both drivers, an EN (active high) pin, a safe delayed start-up time of 1 ms, fail-safe drivers with default low in case of VDDI power-down, and dead time programmability. The Si8239x family offers longer service life and dramatically higher reliability compared to opto-coupled gate drivers.

Automotive Grade is available for certain part numbers. These products are built using automotive-specific flows at all steps in the manufacturing process to ensure the robustness and low defectivity required for automotive applications.

**Industrial Applications**

- Power Delivery Systems
- Motor Control Systems
- Isolated DC-DC Power Supplies
- Lighting Control Systems
- Solar and Industrial Inverters

**Safety Approvals (Pending)**

- UL 1577 recognized
  - Up to 5000 Vrms for 1 minute
- CSA component notice 5A approval
  - IEC 60950-1
- VDE certification conformity
  - VDE 0884-10
  - EN 60950-1 (reinforced insulation)
- CQC certification approval
  - GB4943.1

**Automotive Applications**

- On-board chargers
- Battery management systems
- Charging stations
- Traction inverters
- Hybrid Electric Vehicles
- Battery Electric Vehicles

**KEY FEATURES**

- Two isolated drivers in one package
  - Up to 5 kVRMS isolation
  - Up to 1500 VDC peak driver-to-driver differential voltage
- Enhanced output UVLO safety
  - Status feedback to controller
  - Both outputs drive low on UVLO
- EN pin for enhanced safety
- Extended VDDI: 2.5 V – 5.5 V
- PWM and dual driver versions
- 4.0 A peak output
- High electromagnetic immunity
- Extended start-up time (1ms) for safe initialization sequence
- 30 ns propagation delay
- Transient immunity: 100 kV/µs
- Programmable dead time
  - 10–200 ns
  - 40–600 ns
- Deglitch option for filtering noise
- Wide operating range
  - –40 to +125 °C
- RoHS-compliant packages
  - SOIC-16 wide body
  - SOIC-16 narrow body
- AEC-Q100 qualified
- Automotive-grade OPNs available
  - AIAG compliant PPAP documentation support
  - IMDS and CAMDS listing support

# Table of Contents


**1. Ordering Guide . . . 3**

**2. System Overview . . . 6**

2.1 Typical Performance Characteristics . . . 7

2.2 Family Overview and Logic Operation During Startup . . . 8

2.2.1 Device Behavior . . . 9

2.3 Power Supply Connections . . . 11

2.4 Power Dissipation Considerations . . . 12

2.5 Layout Considerations . . . 13

2.6 Undervoltage Lockout Operation . . . 13

2.6.1 Device Startup . . . 14

2.6.2 Undervoltage Lockout . . . 15

2.6.3 Control Inputs . . . 16

2.6.4 Enable Input . . . 16

2.6.5 Delayed Startup Time . . . 16

2.6.6 RDY Pin . . . 16

2.7 Programmable Dead Time and Overlap Protection . . . 17

2.8 De-glitch Feature . . . 17

**3. Applications. . . . 18**

3.1 High-Side/Low-Side Driver . . . 18

3.2 Dual Driver . . . 19

**4. Electrical Characteristics . . . 20**

**5. Top-Level Block Diagrams . . . 29**

**6. Pin Descriptions . . . 32**

**7. Package Outline: 16-Pin Wide Body SOIC. . . . 33**

**8. Land Pattern: 16-Pin Wide Body SOIC . . . 35**

**9. Package Outline: 16-Pin Narrow Body SOIC . . . 36**

**10. Land Pattern: 16-Pin Narrow Body SOIC . . . 37**

**11. Top Markings . . . 38**

11.1 Si8239x Top Marking (16-Pin Wide Body SOIC) . . . 38

11.2 Top Marking Explanation (16-Pin Wide Body SOIC). . . . 38

11.3 Si8239x Top Marking (16-Pin Narrow Body SOIC) . . . 39

11.4 Top Marking Explanation (16-Pin Narrow Body SOIC) . . . 39

**12. Revision History. . . . 40**

# 1. Ordering Guide

**Table 1.1. Si8239x Ordering Guide**

| Ordering Part Number | Configuration | Output UVLO | Enhanced UVLO | UVLO Status Pin | Delayed Startup Time | Dead-Time Setting | Deglitch | Package Type | Isolation Rating |
|---|---|---|---|---|---|---|---|---|---|
| Si82390AD-IS | Dual, VIA, VIB | 6 V | Yes | Yes | Yes | N/A | No | SOIC-16 WB | 5 kVrms |
| Si82390BD-IS | Dual, VIA, VIB | 8 V | Yes | Yes | Yes | N/A | No | SOIC-16 WB | 5 kVrms |
| Si82390CD-IS | Dual, VIA, VIB | 12 V | Yes | Yes | Yes | N/A | No | SOIC-16 WB | 5 kVrms |
| Si82395AD-IS | Dual, VIA, VIB | 6 V | No | Yes | Yes | N/A | No | SOIC-16 WB | 5 kVrms |
| Si82395BD-IS | Dual, VIA, VIB | 8 V | No | Yes | Yes | N/A | No | SOIC-16 WB | 5 kVrms |
| Si82395CD-IS | Dual, VIA, VIB | 12 V | No | Yes | Yes | N/A | No | SOIC-16 WB | 5 kVrms |
| Si82397AD-IS | Dual, VIA, VIB | 6 V | No | No | Yes | N/A | No | SOIC-16 WB | 5 kVrms |
| Si82397BD-IS | Dual, VIA, VIB | 8 V | No | No | Yes | N/A | No | SOIC-16 WB | 5 kVrms |
| Si82397CD-IS | Dual, VIA, VIB | 12 V | No | No | Yes | N/A | No | SOIC-16 WB | 5 kVrms |
| Si82391AD-IS | Dual, VIA, VIB | 6 V | Yes | Yes | No | N/A | No | SOIC-16 WB | 5 kVrms |
| Si82391BD-IS | Dual, VIA, VIB | 8 V | Yes | Yes | No | N/A | No | SOIC-16 WB | 5 kVrms |
| Si82391CD-IS | Dual, VIA, VIB | 12 V | Yes | Yes | No | N/A | No | SOIC-16 WB | 5 kVrms |
| Si82393CD-IS | HS/LS, VIA/VIB | 12 V | Yes | Yes | No | N/A | Yes | SOIC-16 WB | 5 kVrms |
| Si82396AD-IS | Dual, VIA, VIB | 6 V | No | Yes | No | N/A | No | SOIC-16 WB | 5 kVrms |
| Si82396BD-IS | Dual, VIA, VIB | 8 V | No | Yes | No | N/A | No | SOIC-16 WB | 5 kVrms |
| Si82396CD-IS | Dual, VIA, VIB | 12 V | No | Yes | No | N/A | No | SOIC-16 WB | 5 kVrms |
| Si82394AD-IS | HS/LS, PWM | 6 V | No | Yes | Yes | 10–200 ns | No | SOIC-16 WB | 5 kVrms |
| Si82394BD-IS | HS/LS, PWM | 8 V | No | Yes | Yes | 10–200 ns | No | SOIC-16 WB | 5 kVrms |
| Si82394CD-IS | HS/LS, PWM | 12 V | No | Yes | Yes | 10–200 ns | No | SOIC-16 WB | 5 kVrms |
| Si82398AD-IS | HS/LS, PWM | 6 V | No | Yes | No | 10–200 ns | No | SOIC-16 WB | 5 kVrms |
| Si82398BD-IS | HS/LS, PWM | 8 V | No | Yes | No | 10–200 ns | No | SOIC-16 WB | 5 kVrms |
| Si82398CD-IS | HS/LS, PWM | 12 V | No | Yes | No | 10–200 ns | No | SOIC-16 WB | 5 kVrms |
| Si82390AB-IS1 | Dual, VIA, VIB | 6 V | Yes | Yes | Yes | N/A | No | SOIC-16 NB | 2.5 kVrms |
| Si82390BB-IS1 | Dual, VIA, VIB | 8 V | Yes | Yes | Yes | N/A | No | SOIC-16 NB | 2.5 kVrms |
| Si82390CB-IS1 | Dual, VIA, VIB | 12 V | Yes | Yes | Yes | N/A | No | SOIC-16 NB | 2.5 kVrms |
| Si82392BB-IS1 | HS/LS, VIA/VIB | 8 V | No | Yes | No | N/A | No | SOIC-16 NB | 2.5 kVrms |
| Si82395AB-IS1 | Dual, VIA, VIB | 6 V | No | Yes | Yes | N/A | No | SOIC-16 NB | 2.5 kVrms |
| Si82395BB-IS1 | Dual, VIA, VIB | 8 V | No | Yes | Yes | N/A | No | SOIC-16 NB | 2.5 kVrms |

| Ordering Part Number | Configuration | Output UVLO | Enhanced UVLO | UVLO Status Pin | Delayed Startup Time | Dead-Time Setting | Deglitch | Package Type | Isolation Rating |
|---|---|---|---|---|---|---|---|---|---|
| Si82395CB-IS1 | Dual, VIA, VIB | 12 V | No | Yes | Yes | N/A | No | SOIC-16 NB | 2.5 kVrms |
| Si82394AB4-IS1 | HS/LS, PWM | 6 V | No | Yes | Yes | 40–600 ns | Yes | SOIC-16 NB | 2.5 kVrms |
| Si82394BB4-IS1 | HS/LS, PWM | 8 V | No | Yes | Yes | 40–600 ns | Yes | SOIC-16 NB | 2.5 kVrms |
| Si82394CB4-IS1 | HS/LS, PWM | 12 V | No | Yes | Yes | 40–600 ns | Yes | SOIC-16 NB | 2.5 kVrms |
| Si82394AD4-IS | HS/LS, PWM | 6 V | No | Yes | Yes | 40–600 ns | Yes | SOIC-16 WB | 5 kVrms |
| Si82394BD4-IS | HS/LS, PWM | 8 V | No | Yes | Yes | 40–600 ns | Yes | SOIC-16 WB | 5 kVrms |
| Si82394CD4-IS | HS/LS, PWM | 12 V | No | Yes | Yes | 40–600 ns | Yes | SOIC-16 WB | 5 kVrms |
| Si82391AB-IS1 | Dual, VIA, VIB | 6 V | Yes | Yes | No | N/A | No | SOIC-16 NB | 2.5 kVrms |
| Si82391BB-IS1 | Dual, VIA, VIB | 8 V | Yes | Yes | No | N/A | No | SOIC-16 NB | 2.5 kVrms |
| Si82391CB-IS1 | Dual, VIA, VIB | 12 V | Yes | Yes | No | N/A | No | SOIC-16 NB | 2.5 kVrms |
| Si82396AB-IS1 | Dual, VIA, VIB | 6 V | No | Yes | No | N/A | No | SOIC-16 NB | 2.5 kVrms |
| Si82396BB-IS1 | Dual, VIA, VIB | 8 V | No | Yes | No | N/A | No | SOIC-16 NB | 2.5 kVrms |
| Si82396CB-IS1 | Dual, VIA, VIB | 12 V | No | Yes | No | N/A | No | SOIC-16 NB | 2.5 kVrms |
| Si82398AB4-IS1 | HS/LS, PWM | 6 V | No | Yes | No | 40–600 ns | Yes | SOIC-16 NB | 2.5 kVrms |
| Si82398BB4-IS1 | HS/LS, PWM | 8 V | No | Yes | No | 40–600 ns | Yes | SOIC-16 NB | 2.5 kVrms |
| Si82398CB4-IS1 | HS/LS, PWM | 12 V | No | Yes | No | 40–600 ns | Yes | SOIC-16 NB | 2.5 kVrms |
| Si82398AD4-IS | HS/LS, PWM | 6 V | No | Yes | No | 40–600 ns | Yes | SOIC-16 WB | 5 kVrms |
| Si82398BD4-IS | HS/LS, PWM | 8 V | No | Yes | No | 40–600 ns | Yes | SOIC-16 WB | 5 kVrms |
| Si82398CD4-IS | HS/LS, PWM | 12 V | No | Yes | No | 40–600 ns | Yes | SOIC-16 WB | 5 kVrms |

**Note:**

1. All products are rated at 4 A output drive current max, VDDI = 2.5 V – 5.5 V, EN (active high).
2. All packages are RoHS-compliant with peak reflow temperatures of 260 °C according to the JEDEC industry standard classifications and peak solder temperatures.
3. “Si” and “SI” are used interchangeably.
4. An "R" at the end of the part number denotes tape and reel packaging option.

### Automotive Grade OPNs

Automotive-grade devices are built using automotive-specific flows at all steps in the manufacturing process to ensure robustness and low defectivity. These devices are supported with AIAG-compliant Production Part Approval Process (PPAP) documentation and feature International Material Data System (IMDS) and China Automotive Material Data System (CAMDS) listings. Qualifications are compliant with AEC-Q100, and a zero-defect methodology is maintained throughout definition, design, evaluation, qualification, and mass production steps.

**Table 1.2. Ordering Guide for Automotive Grade OPNs[5, 6, 7]**

| Ordering Part Number | Configuration | Output UVLO | Enhanced UVLO | UVLO Status Pin | Delayed Startup Time | Dead-Time Setting | Deglitch | Package Type | Isolation Rating |
|---|---|---|---|---|---|---|---|---|---|
| Si82394AD-AS | HS/LS, PWM | 6 V | No | Yes | Yes | 10-200 ns | No | SOIC-16 WB | 5 kVrms |
| Si82394AD4-AS | HS/LS, PWM | 6 V | No | Yes | Yes | 40-600 ns | Yes | SOIC-16 WB | 5 kVrms |
| Si82396CB-AS1 | Dual, VIA, VIB | 12 V | No | Yes | No | N/A | No | SOIC-16 NB | 2.5 kVrms |

**Note:**

1. All products are rated at 4 A output drive current max, VDDI = 2.5 V – 5.5 V, EN (active high).
2. All packages are RoHS-compliant with peak reflow temperatures of 260 °C according to the JEDEC industry standard classifications and peak solder temperatures.
3. “Si” and “SI” are used interchangeably.
4. An "R" at the end of the part number denotes tape and reel packaging option.
5. Automotive-Grade devices (with an "–A" suffix) are identical in construction materials, topside marking, and electrical parameters to their Industrial-Grade (with a "–I" suffix) version counterparts. Automotive-Grade products are produced utilizing full automotive process flows and additional statistical process controls throughout the manufacturing flow. The Automotive-Grade part number is included on shipping labels.
6. Referring to Section 11 “Top Markings”, the Manufacturing Code represented by either “RTTTTT” or “TTTTTT” contains as its first character a letter in the range N through Z to indicate Automotive-Grade.
7. Additional Ordering Part Numbers may be available in Automotive-Grade. Please contact your local Silicon Labs sales representative for further information.

## 2. System Overview

The operation of an Si8239x channel is analogous to that of an optocoupler and gate driver, except an RF carrier is modulated instead of light. This simple architecture provides a robust isolated data path and requires no special considerations or initialization at start-up. A simplified block diagram for a single Si8239x channel is shown in the following figure.

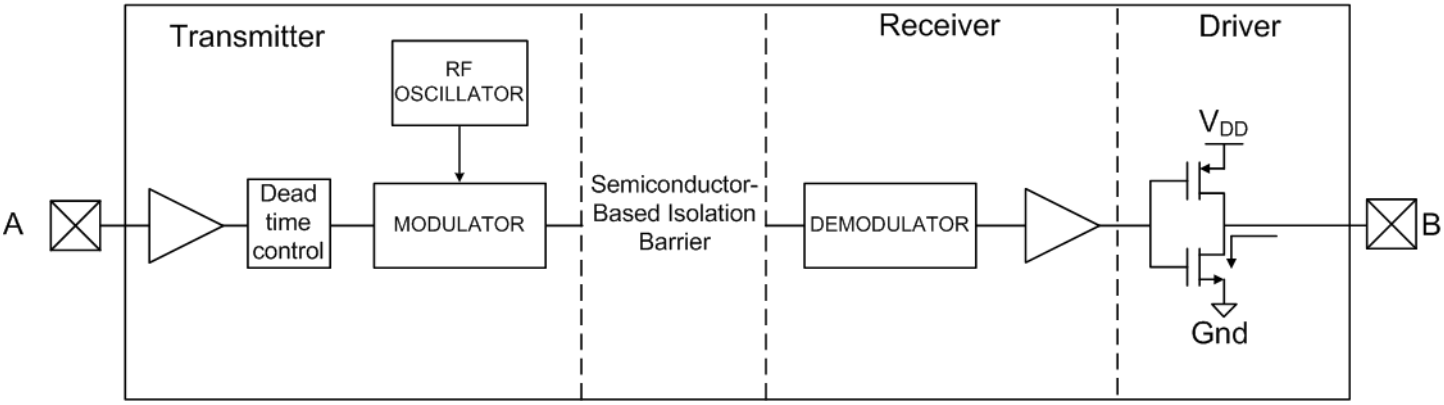


**Figure 2.1. Simplified Channel Diagram**

A channel consists of an RF Transmitter and RF Receiver separated by a semiconductor-based isolation barrier. Referring to the Transmitter, input A modulates the carrier provided by an RF oscillator using on/off keying. The Receiver contains a demodulator that decodes the input state according to its RF energy content and applies the result to output B via the output driver. This RF on/off keying scheme is superior to pulse code schemes as it provides best-in-class noise immunity, low power consumption, and better immunity to magnetic fields. See the following figure for more details.

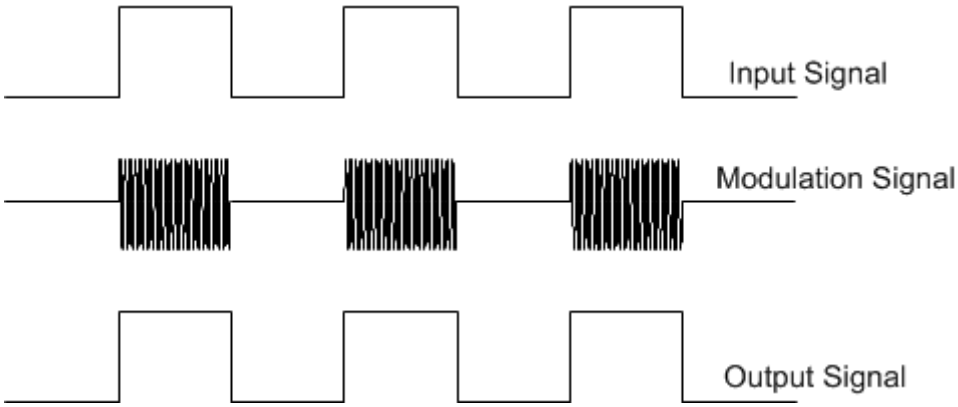


**Figure 2.2. Modulation Scheme**

## 2.1 Typical Performance Characteristics

The typical performance characteristics depicted in the following figures are for information purposes only. Refer to the Electrical Characteristics table for actual specification limits.

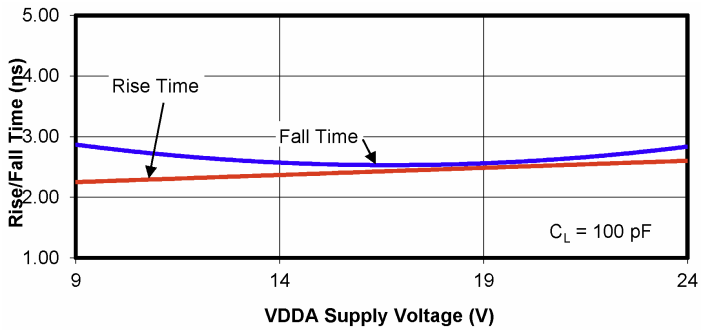


**Figure 2.3. Rise/Fall Time vs. Supply Voltage**

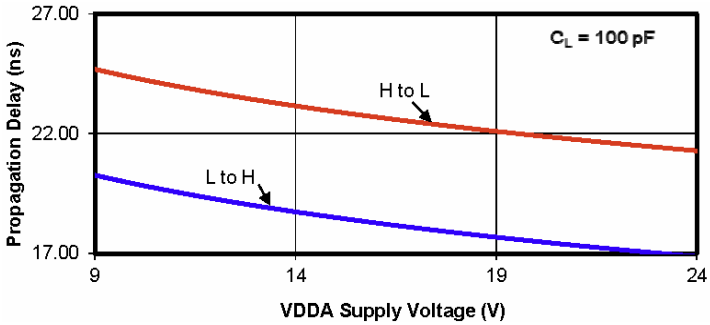


**Figure 2.4. Propagation Delay vs. Supply Voltage**

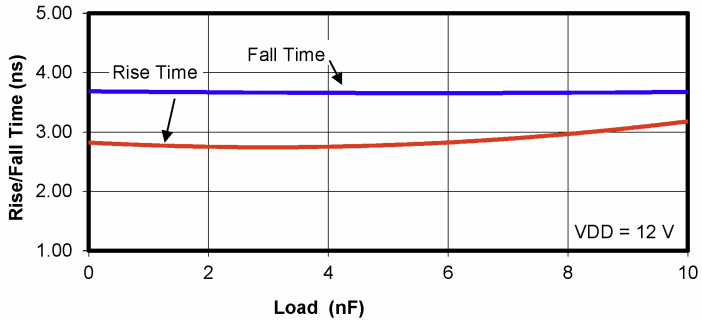


**Figure 2.5. Rise/Fall Time vs. Load**

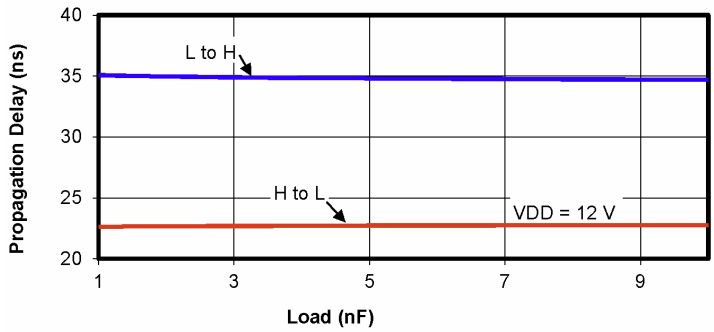


**Figure 2.6. Propagation Delay vs. Load**

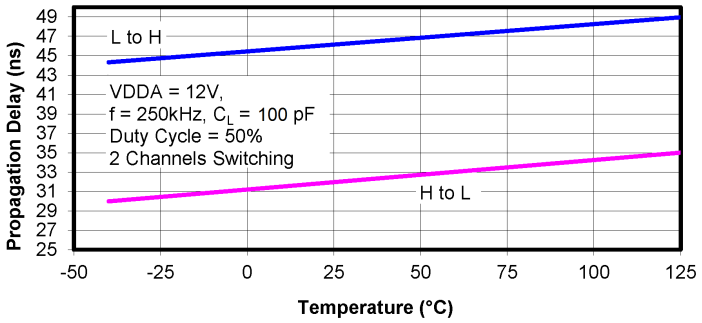


**Figure 2.7. Propagation Delay vs. Temperature**

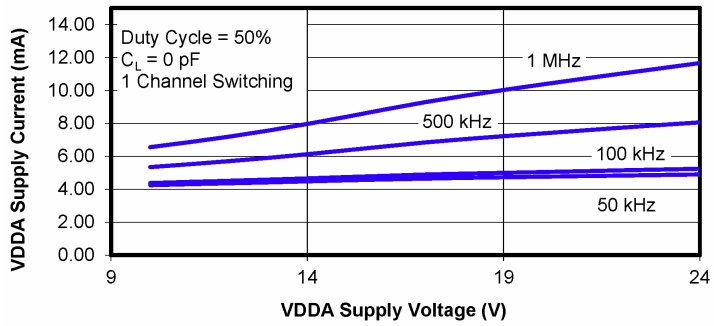


**Figure 2.8. Supply Current vs. Supply Voltage**

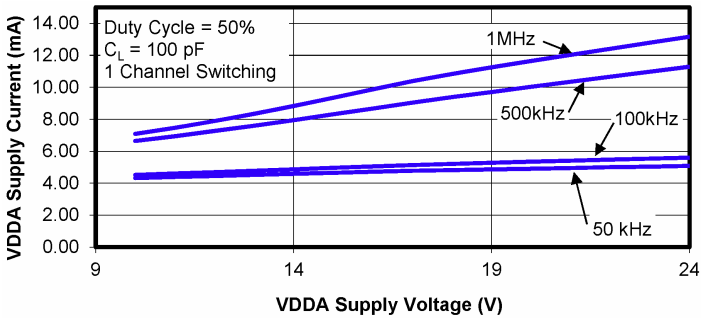


**Figure 2.9. Supply Current vs. Supply Voltage**

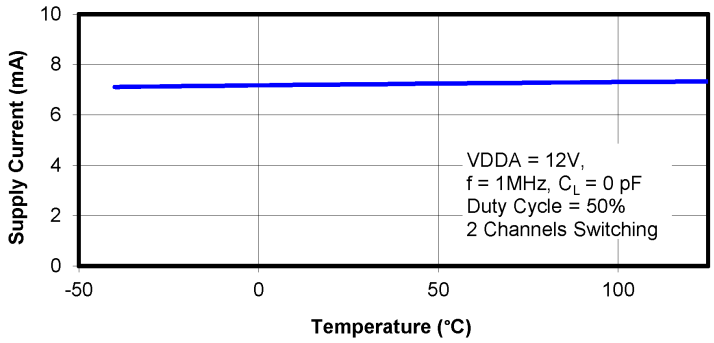


**Figure 2.10. Supply Current vs. Temperature**

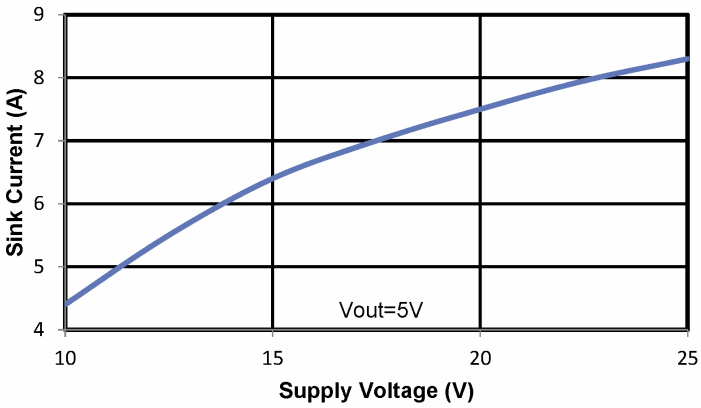


**Figure 2.11. Output Sink Current vs. Supply Voltage**

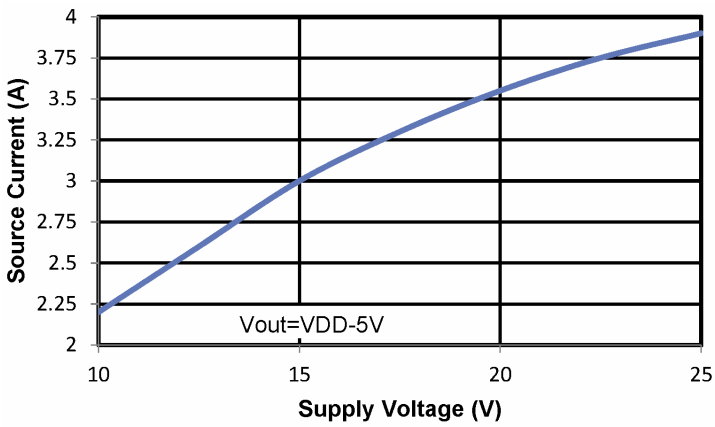


**Figure 2.12. Output Source Current vs. Supply Voltage**

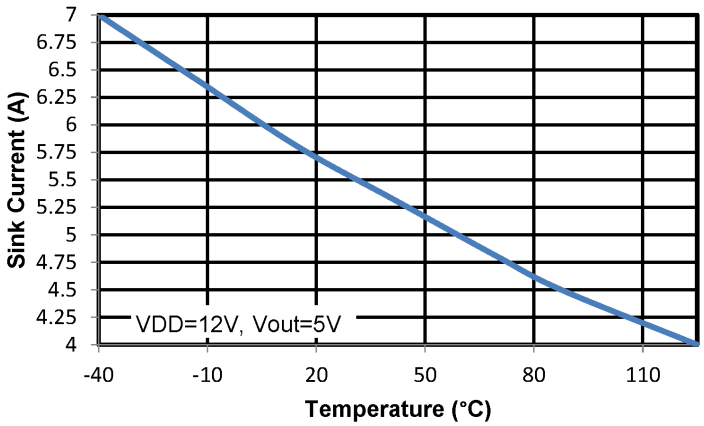


**Figure 2.13. Output Sink Current vs. Temperature**

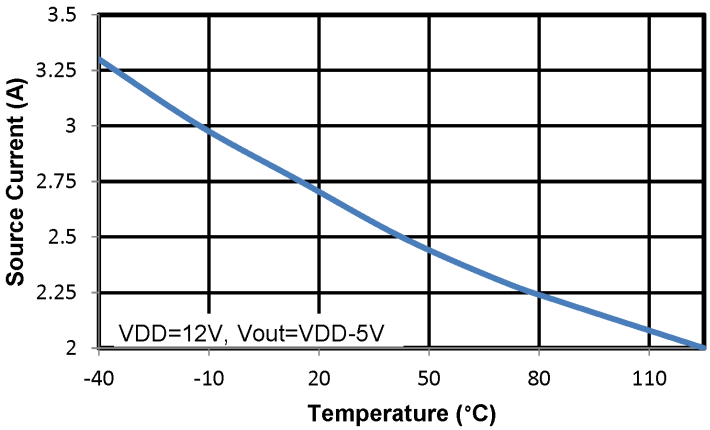


**Figure 2.14. Output Source Current vs. Temperature**

### 2.2 Family Overview and Logic Operation During Startup

The Si8239x family of isolated drivers consists of high-side/low-side and dual driver configurations.

### 2.2.1 Device Behavior

The following are truth tables for the Si8239x families.

**Table 2.1. Si82390/1/3 Drivers Enhanced UVLO and Status**

| VIA | VIB | EN[1] | VDDI | VDDA | VDDB | VOA | VOB | RDY | Notes |
|---|---|---|---|---|---|---|---|---|---|
| H | L | H | P[2] | P | P | H | L | H | |
| L | H | H | P | P | P | L | H | H | |
| H | H | H | P | P | P | H / L[4] | H / L[4] | H | |
| L | L | H | P | P | P | L | L | H | |
| X | X | L/NC | P | P | P | L | L | H | Device disabled |
| X | X | X | UP[2] | P | P | L | L | UD[3] | Fail-safe output when VDDI unpowered |
| X | X | H | P | P | UP | L | UD | L | VOA, VOB are actively driven low if either VDDA or VDDB is UP |
| X | X | H | P | UP | P | UD | L | L | |

**Note:**

1. The EN pin needs to be pulled down with a 100 kΩ resistor externally to GND.
2. The chip can be powered through the VIA,VIB input ESD diodes even if VDDI is unpowered. It is recommended that inputs be left unpowered when VDDI is unpowered. The EN pin has a special ESD circuit that prevents the IC from powering up through the EN pin.
3. UD = undetermined if same side power is UP.
4. VOA = VOB = L for Si82393 only

**Table 2.2. Si82392/5/6 Drivers with UVLO Status**

| VIA | VIB | EN[1] | VDDI | VDDA | VDDB | VOA | VOB | RDY | Notes |
|---|---|---|---|---|---|---|---|---|---|
| H | L | H | P | P | P | H | L | H | |
| L | H | H | P | P | P | L | H | H | |
| H | H | H | P | P | P | H / L[4] | H / L[4] | H | |
| L | L | H | P | P | P | L | L | H | |
| X | X | L/NC | P | P | P | L | L | H | Device disabled |
| X | X | X | UP[2] | P | P | L | L | UD[3] | Fail-safe output when VDDI unpowered |
| H | X | H | P | P | UP | H | UD | L | VOA depends on VDDA state |
| L | X | H | P | P | UP | L | UD | L | |
| X | H | H | P | UP | P | UD | H | L | VOB depends on VDDB state |
| X | L | H | P | UP | P | UD | L | L | |

| VIA | VIB | EN[1] | VDDI | VDDA | VDDB | VOA | VOB | RDY | Notes |
|---|---|---|---|---|---|---|---|---|---|

**Note:**

1. The EN pin needs to be pulled down with a 100 kΩ resistor externally to GND.
2. The chip can be powered through the VIA,VIB input ESD diodes even if VDDI is unpowered. It is recommended that inputs be left unpowered when VDDI is unpowered. The EN pin has a special ESD circuit that prevents the IC from powering up through the EN pin.
3. UD = undetermined if same side power is UP.
4. VOA = VOB = L for Si82392 only

**Table 2.3. Si82397 Dual Drivers with No UVLO Status**

| VIA | VIB | EN[1] | VDDI | VDDA | VDDB | VOA | VOB | Notes |
|---|---|---|---|---|---|---|---|---|
| H | L | H | P | P | P | H | L | |
| L | H | H | P | P | P | L | H | |
| H | H | H | P | P | P | H | H | |
| L | L | H | P | P | P | L | L | |
| X | X | L/NC | P | P | P | L | L | Device disabled |
| X | X | X | UP[2] | P | P | L | L | Fail-safe output when VDDI is unpowered |
| H | X | H | P | P | UP | H | UD[3] | VOA depends on VDDA state |
| L | X | H | P | P | UP | L | UD | |
| X | H | H | P | UP | P | UD | H | VOB depends on VDDB state |
| X | L | H | P | UP | P | UD | L | |

**Note:**

1. The EN pin needs to be pulled down with a 100 kΩ resistor externally to GND.
2. The chip can be powered through the VIA,VIB input ESD diodes even if VDDI is unpowered. It is recommended that inputs be left unpowered when VDDI is unpowered. The EN pin has a special ESD circuit that prevents the IC from powering up through the EN pin.
3. UD = undetermined if same side power is UP.

**Table 2.4. Si82394/8 PWM Input HS/LS Drivers with UVLO Status**

| PWM | EN[1] | VDDI | VDDA | VDDB | VOA | VOB | RDY | Notes |
|---|---|---|---|---|---|---|---|---|
| H | H | P | P | P | H | L | H | See Dead-time note and Figure 2.18 Dead Time Waveforms for High-Side/Low-Side Drivers on page 17 for timing |
| L | H | P | P | P | L | H | H | |
| X | L/NC | P | P | P | L | L | H | Device disabled |
| X | X | UP[2] | P | P | L | L | UD[3] | Fail-safe output when VDDI unpowered |
| H | H | P | P | UP | H | UD | L | VOA depends on VDDA state |
| L | H | P | P | UP | L | UD | L | |

| PWM | EN[1] | VDDI | VDDA | VDDB | VOA | VOB | RDY | Notes |
|---|---|---|---|---|---|---|---|---|
| H | H | P | UP | P | UD | L | L | VOB depends on VDDB state |
| L | H | P | UP | P | UD | H | L | |

**Note:**

1. The EN pin needs to be pulled down with a 100 kΩ resistor externally to GND.
2. The chip can be powered through the PWM input ESD diodes even if VDDI is unpowered. It is recommended that inputs be left unpowered when VDDI is unpowered. The EN pin has a special ESD circuit that prevents the IC from powering up through the EN pin.
3. UD = undetermined if same side power is UP.

### 2.3 Power Supply Connections

Isolation requirements mandate separating VDDI from the driver supplies. The decoupling caps for these supplies must be placed as close to the VDD and GND pins of the Si8239x as possible. The optimum values for these capacitors are 1 µF and 0.1 µF for VDDI and 10 µF and 0.1 µF for each driver supply. Low effective series resistance (ESR) capacitors, such as Tantalum, are recommended.

### 2.4 Power Dissipation Considerations

Proper system design must assure that the Si8239x operates within safe thermal limits across the entire load range. The Si8239x total power dissipation is the sum of the power dissipated by bias supply current, internal parasitic switching losses, and power dissipated by the series gate resistor and load. Equation 1 shows Si8239x power dissipation.

$$P_D = V_{DDI} * I_{DDI} + 2 * V_{DD2} * I_{DD2} + f * C_L * V_{DD2}^2 * \left(\frac{R_p}{R_p + R_g}\right) + f * C_L * V_{DD2}^2 * \left(\frac{R_n}{R_n + R_g}\right) + 2 * f * C_{\text{int}} * V_{DD2}^2$$

**Equation 1.**

**Note:** Where:

- $P_D$ is the total Si8239x device power dissipation (W)
- $I_{DDI}$ is the input side maximum bias current (from table 4.1, 3.8 mA)
- $I_{DD2}$ is the driver side maximum bias current (from table 4.1, 6.5 mA)
- $C_{int}$ is the internal parasitic capacitance (370 pf)
- $V_{DDI}$ is the input side VDD supply voltage (2.5 V to 5. 5V)
- $V_{DD2}$ is the driver side supply voltage (10 V to 24 V)
- f is the switching frequency (Hz)
- $C_L$ is the load capacitance (F)
- $R_G$ is the external gate resistor (Ω)
- $R_P$ is the RDS(ON) of the driver pull-up device (2.7 Ω)
- $R_n$ is the RDS(ON) of the driver pull-down device (1 Ω)

**Example calculation (using IDDx values from Table 4.1 for Si82397)**

$V_{DDI}$ = 5 V

$V_{DD2}$ = 12 V

f = 350 kHz

$R_G$ = 22 Ω

$C_L$ = 2 nF

$$P_D = 5 * .0021 + 2 * 12 * .0025 + 350000 * \left(2 * 10^{-9}\right) * 144 * \left(\frac{2.7}{2.7 + 22}\right) + 350000 * \left(2 * 10^{-9}\right) * 144 * \left(\frac{1}{1 + 22}\right) + 2 * 350000 * \left(370 * 10^{-12}\right) * 144$$

$P_D$ = 0.123 W is the total dissipated power by the Si8239x package.

From this, the driver junction temperature can be calculated using Equation 2.

$$T_j = T_A + P_D * \theta_{ja}$$

**Equation 2.**

**Note:** Where:

- $T_j$ is the junction temperature (°C)
- $T_A$ is the ambient temperature (°C)
- $P_D$ is the power dissipated in the package (W)
- $\Theta_{ja}$ is the thermal resistance of the package (100 °C/W from table 4.7)

For this example, assume that $T_A$ is 25 °C.

$$T_j = 25 + 0.123 * 100$$

$T_j$ is 37.3 °C.

Equation 2 can be rearranged to determine the maximum package power dissipation for a given ambient temperature.

$$P_{Dmax} = \left( \frac{T_{jmax} - T_A}{\theta_{ja}} \right)$$

**Note:** Where:

- $P_{Dmax}$ is the maximum allowed power dissipation (W)
- $T_{jmax}$ is the maximum allowed junction temperature (150 °C from table 4.8)
- $T_A$ is the ambient temperature (25 °C in this example)
- $\Theta_{ja}$ is the thermal resistance of the package (100 °C/W from table 4.7)

$P_{Dmax}$ = 1.25 W

Substituting values used in this example back into Equation 1, establishes a relationship between the maximum capacitive load and switching frequency.

The following figure shows the relationship between the capacitive load and the switching frequency for four different driver supply voltages. In the figure, the points along the load line represent the package dissipation-limited value of CL as a function of switching frequency.

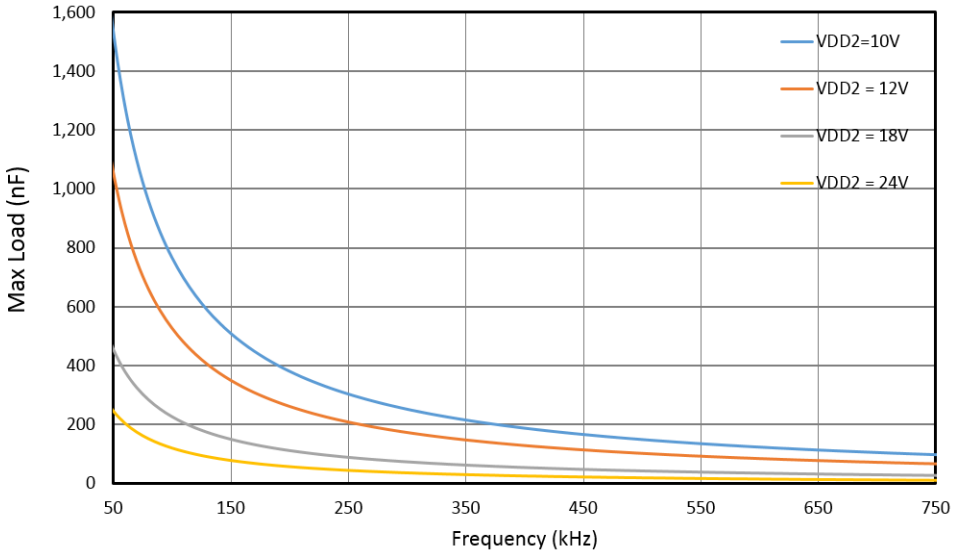


**Figure 2.15. Max Load vs. Switching Frequency**

### 2.5 Layout Considerations

It is most important to minimize ringing in the drive path and noise on the Si8239x VDD lines. Care must be taken to minimize parasitic inductance in these paths by locating the Si8239x as close to the device it is driving as possible. In addition, the VDD supply and ground trace paths must be kept short. For this reason, the use of power and ground planes is highly recommended. A split ground plane system having separate ground and VDD planes for power devices and small signal components provides the best overall noise performance.

### 2.6 Undervoltage Lockout Operation

Device behavior during start-up, normal operation and shutdown is shown in Figure 2.16 Si82391/2/3/6/8 Device Behavior during Normal Operation and Shutdown on page 15, where UVLO+ and UVLO- are the positive-going and negative-going thresholds respectively. Note that outputs VOA and VOB default low when input side power supply (VDDI) is not present.

### 2.6.1 Device Startup

Outputs VOA and VOB are held low during power-up until VDD is above the UVLO threshold for time period tSTART. Following this, the outputs follow the states of inputs VIA and VIB.

### 2.6.2 Undervoltage Lockout

Undervoltage Lockout (UVLO) is provided to prevent erroneous operation during device startup and shutdown or when VDD is below its specified operating circuits range. The input (control) side, Driver A and Driver B, each have their own undervoltage lockout monitors.

The Si8239x input side enters UVLO when VDDI < VDDIUV–, and exits UVLO when VDDI > VDDIUV+. The driver outputs, VOA and VOB, remain low when the input side of the Si8239x is in UVLO and their respective VDD supply (VDDA, VDDB) is within tolerance. Each driver output can enter or exit UVLO independently for the Si82394/5/6/7/8 products. For example, VOA unconditionally enters UVLO when VDDA falls below VDDAUV– and exits UVLO when VDDA rises above VDDAUV+. For the Si82390/1/3 products, when either VDDA or VDDB falls under VDDxUV–, this information is fed back through the isolation barrier to the input side logic which forces VOB or VOA to be driven low respectively under these conditions. If the application is driving a transformer for an isolated power converter, for example, this behavior is useful to prevent flux imbalances in the transformer. Please note that this feature implies that it can only be implemented when the VDDA and VDDB power supplies are independent from each other. If a bootstrap circuit is used for Si82390/1/3, it will prevent the IC from powering up. Do not use the Si82390/1/3 in conjunction with a bootstrap circuit for driver power.

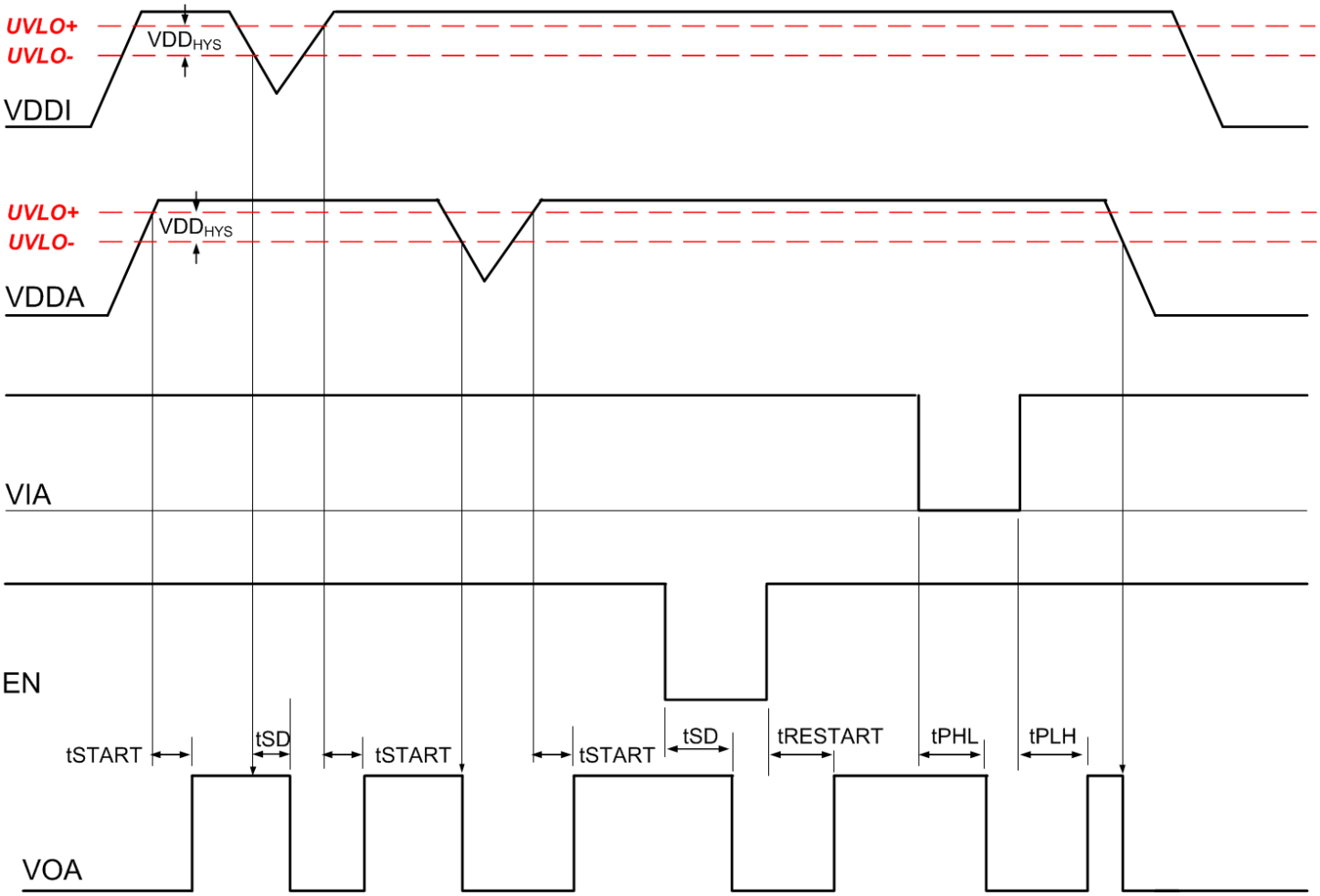


**Figure 2.16. Si82391/2/3/6/8 Device Behavior during Normal Operation and Shutdown**

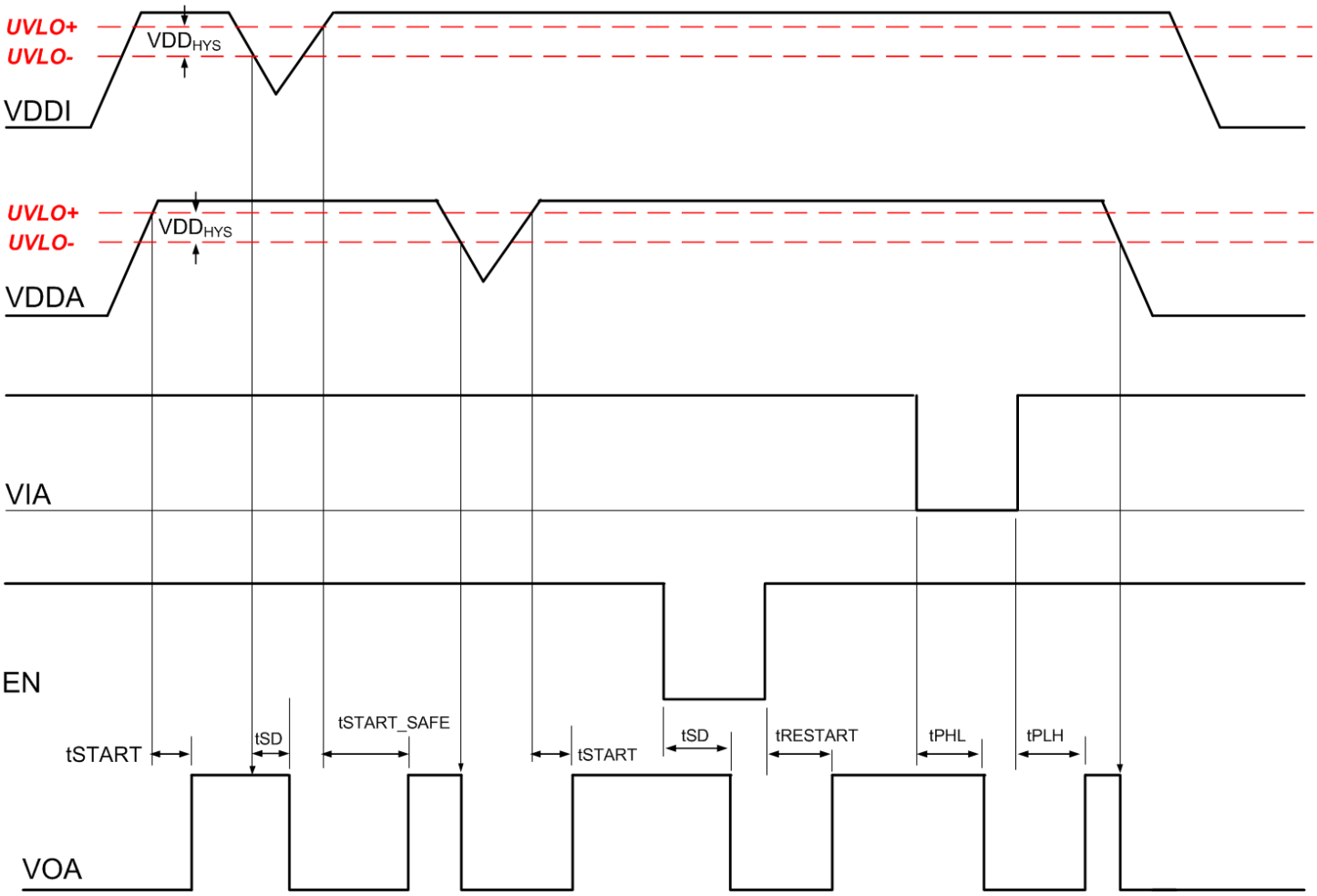


**Figure 2.17. Si82390/4/5/7 Device Behavior during Normal Operation and Shutdown**

### 2.6.3 Control Inputs

VIA, VIB, and PWM inputs are high-true, TTL level-compatible logic inputs. A logic high signal on VIA or VIB causes the corresponding output to go high. For PWM input versions (Si82394/8), VOA is high and VOB is low when the PWM input is high, and VOA is low and VOB is high when the PWM input is low.

### 2.6.4 Enable Input

When brought low, the EN input unconditionally drives VOA and VOB low regardless of the states of VIA and VIB. Device operation terminates within tSD after EN = VIL and resumes within tRESTART after EN = VIH. The EN input has no effect if VDDI is below its UVLO level (i.e., VOA, VOB remain low). The EN pin should be connected to GNDI through a 100 kΩ pull-down resistor.

### 2.6.5 Delayed Startup Time

Product options Si82390/4/5/7 have a safe startup time (tSTARTUP_SAFE) of 1ms typical from input power valid to output showing valid data. This feature allows users to proceed through a safe initialization sequence with a monotonic output behavior.

### 2.6.6 RDY Pin

This is a digital output pin available on all options except the Si82397. The RDY pin is “H” if all the UVLO circuits monitoring VDDI, VDDA, and VDDB are above UVLO threshold. It indicates that device is ready for operation. An “L” status indicates that one of the power supplies (VDDI, VDDA, or VDDB) is in an unpowered state.

### 2.7 Programmable Dead Time and Overlap Protection

All high-side/low-side drivers (Si82394/8) include programmable dead time, which adds a user-programmable delay between transitions of VOA and VOB. When enabled, dead time is present on all transitions. The amount of dead time delay (DT) is programmed by a single resistor (RDT) connected from the DT input to ground per the equation below. Note that the dead time pin should be connected to GND1 through a resistor between the values of 6 kΩ and 100 kΩ and a filter capacitor of 100 pF in parallel as shown in Figure 3.1 Si82394/8 Application Diagram on page 18. It is highly recommended it not be tied to VDDI. See Figure 2.18 Dead Time Waveforms for High-Side/Low-Side Drivers on page 17 below.

$$DT\ (\text{typical}) = 1.97 \times RDT + 2.75$$

where:

$DT$ = dead time (ns)

and

$RDT$ = dead time programming resistor (kΩ)

and

$6\ \text{k}\Omega\ RDT < 100\ \text{k}\Omega$

**Equation 4.**

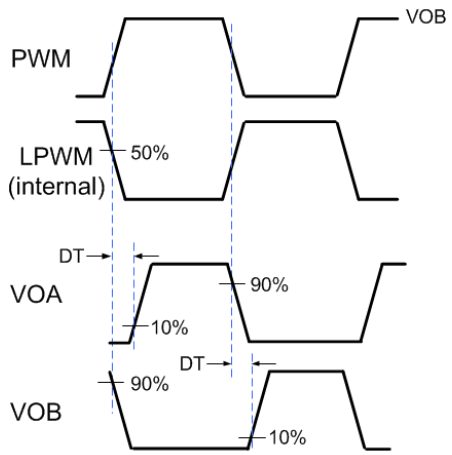


A. Typical Dead Time Operation

**Figure 2.18. Dead Time Waveforms for High-Side/Low-Side Drivers**

### 2.8 De-glitch Feature

A de-glitch feature is provided on some options, as defined in the Ordering Guide. The de-glitch basically provides an internal time delay during which any noise is ignored and will not pass through the IC. It is about 30 ns; so, for these product options, the prop delay will be extended by 30 ns.

# 3. Applications

The following examples illustrate typical circuit configurations using the Si8239x.

## 3.1 High-Side/Low-Side Driver

The following figure shows the Si82394/8 controlled by a single PWM signal.

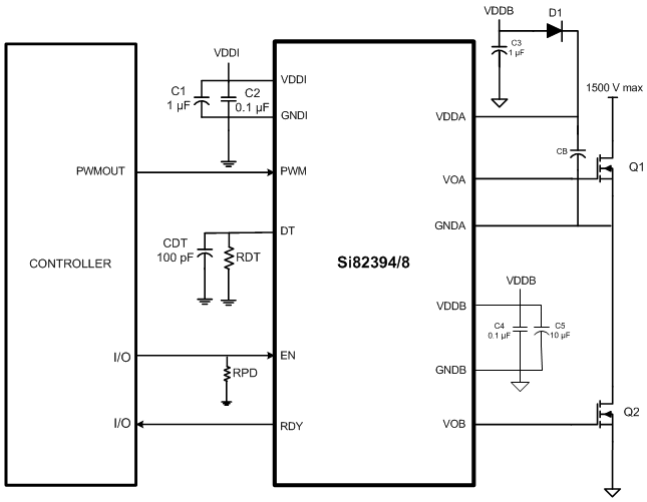


**Figure 3.1. Si82394/8 Application Diagram**

In the above figure, D1 and CB form a conventional bootstrap circuit that allows VOA to operate as a high-side driver for Q1, which has a maximum drain voltage of 1500 V. VOB is connected as a conventional low-side driver. Note that the input side of the Si8239x requires VDDI in the range of 2.5 to 5.5 V, while the VDDA and VDDB output side supplies must be between 6.5 and 24 V with respect to their respective grounds. The boot-strap start up time will depend on the CB cap chosen. Also note that the bypass capacitors on the Si8239x should be located as close to the chip as possible.

### 3.2 Dual Driver

The following figure shows the Si82390/1/5/6/7 configured as a dual driver. Note that the drain voltages of Q1 and Q2 can be referenced to a common ground or to different grounds with as much as 1500 Vdc between them.

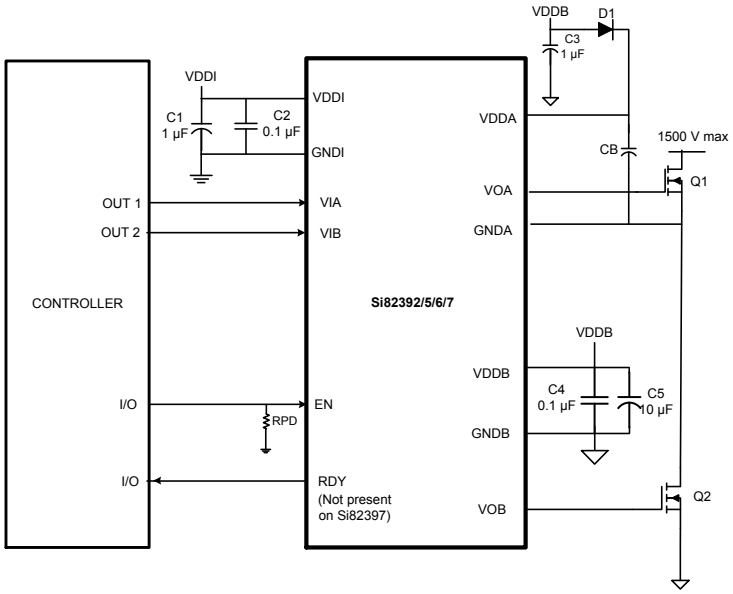


**Figure 3.2. Si82392/5/6/7 Application Diagram**

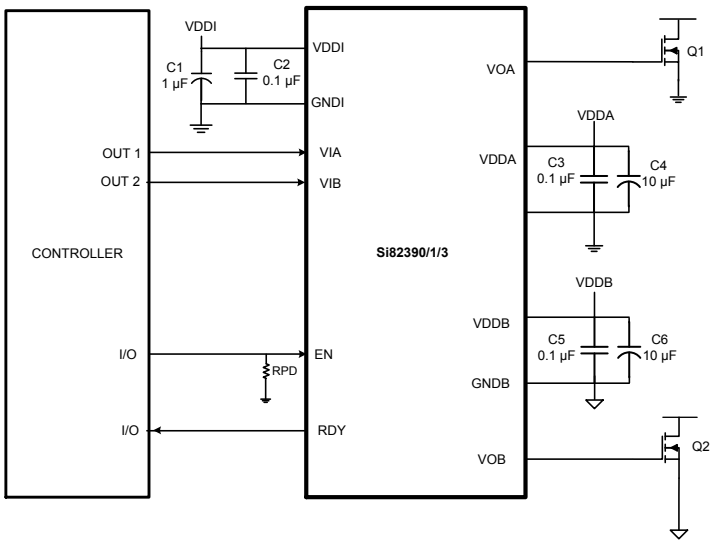


**Figure 3.3. Si82390/1/3 with Enhanced UVLO Feature Application Diagram**

Because each output driver resides on its own die, the relative voltage polarities of VOA and VOB can reverse without damaging the driver. A dual driver can operate as a dual low-side or dual high-side driver and is unaffected by static or dynamic voltage polarity changes. The Si82390/1/3 come equipped with an enhanced UVLO feature as described in 2.6.2 Undervoltage Lockout. This feature is intended for systems which provide VDDA and VDDB as independent isolated power supplies. Si82390/1/3 are not recommended for use with bootstrap configuration for driver supply since the driver output will not be asserted unless both VDDA and VDDB are above the UVLO threshold.

# 4. Electrical Characteristics

**Table 4.1. Electrical Characteristics[1,2]**

| Parameter | Symbol | Test Condition | Min | Typ | Max | Unit |
|---|---|---|---|---|---|---|
| **DC Specifications** | | | | | | |
| Input-side Power Supply Voltage | VDDI | | 2.5 | 3.3 | 5.5 | V |
| Driver Supply Voltage | VDDA, VDDB | Voltage between VDDA and GNDA, and VDDB and GNDB | 6.5 | — | 24 | V |
| Input Supply Quiescent Current EN = 0 | IDDI(Q) | Si82390/1/2/3/4/5/6/8 | — | 2.8 | 3.8 | mA |
| | | Si82397 | — | 1.5 | 2.1 | mA |
| Output Supply Quiescent Current, per channel EN = 0 | IDDA(Q), IDDB(Q) | Si82390/1/2/3/4/5/6/8 | — | 4.2 | 6.5 | mA |
| | | Si82397 | — | 1.5 | 2.5 | mA |
| Input Supply Active Current | IDDI | Si82390/1/2/3/5/6 VIA, VIB freq = 1 MHz | — | 5.0 | 7.2 | mA |
| | | Si82394/8: PWM freq = 1 MHz | — | 5.2 | 7.3 | |
| | | Si82397: VIA, VIB freq = 1 MHz | — | 3.7 | 5.6 | |
| Output Supply Active Current, per channel | IDDA/B | Si82390/1/2/3/4/5/6/8: Input freq = 1 MHz, no load | — | 7.1 | 16.0 | mA |
| | | Si82397: Input freq = 1 MHz, no load | — | 4.4 | 12.4 | |
| Input Pin Leakage Current, VIA, VIB, PWM | IVIA, IVIB, IPWM | | –10 | — | +10 | µA |
| Input Pin Leakage Current, EN | IENABLE | | –10 | — | +10 | µA |
| Logic High Input Threshold | VIH | TTL Levels | 2.0 | — | — | V |
| Logic Low Input Threshold | VIL | TTL Levels | — | — | 0.8 | V |
| Input Hysteresis | $VI_{HYST}$ | | 400 | 450 | — | mV |
| Logic High Output Voltage | VOAH, VOBH | IOA, IOB = –1 mA | VDDA, VDDB – 0.04 | — | — | V |
| Logic Low Output Voltage | VOAL, VOBL | IOA, IOB = 1 mA | — | — | 0.04 | V |
| Output Short-Circuit Pulsed Source Current | IOA(SCL), IOB(SCL) | See Figure 4.1 IOL Sink Current Test on page 23 | — | 4.0 | — | A |
| Output Short-Circuit Pulsed Source Current | IOA(SCH), IOB(SCH) | See Figure 4.2 IOH Source Current Test on page 23 | — | 2.0 | — | A |
| Output Sink Resistance | $R_{ON(SINK)}$ | | — | 1.0 | — | Ω |
| Output Source Resistance | $R_{ON(SOURCE)}$ | | — | 2.7 | — | Ω |
| VDDI Undervoltage Threshold | $VDDI_{UV+}$ | VDDI rising | 2.15 | 2.3 | 2.5 | V |
| VDDI Undervoltage Threshold | $VDDI_{UV-}$ | VDDI falling | 2.1 | 2.2 | 2.4 | V |

| Parameter | Symbol | Test Condition | Min | Typ | Max | Unit |
|---|---|---|---|---|---|---|
| VDDI Lockout Hysteresis | $VDDI_{HYS}$ | | 80 | 100 | — | mV |
| VDDA, VDDB Undervoltage Threshold | $VDDA_{UV+}$, $VDDB_{UV+}$ | VDDA, VDDB rising | | | | V |
| 6 V | | | 5.0 | 6.0 | 7.0 | |
| 8 V | | | 7.2 | 8.6 | 10.0 | |
| 12 V | | | 9.2 | 11.1 | 12.8 | |
| VDDA, VDDB Undervoltage Threshold | $VDDA_{UV-}$, $VDDB_{UV-}$ | VDDA, VDDB falling | | | | V |
| 6 V | | | 4.7 | 5.8 | 6.7 | |
| 8 V | | | 6.6 | 8.0 | 9.3 | |
| 12 V | | | 8.7 | 10.1 | 11.6 | |
| VDDA, VDDB Lockout Hysteresis | $VDDA_{HYS}$, $VDDB_{HYS}$ | UVLO = 6 V | 200 | 280 | — | mV |
| | | UVLO = 8 V | 450 | 600 | — | |
| | | UVLO = 12 V | 600 | 1000 | — | |
| **AC Specifications** | | | | | | |
| UVLO Fault Shutdown Time Enhanced Mode<br>Si82390/1/3 only | | $VDDA_{UV-}$ to VOB low<br>$VDDB_{UV-}$ to VOA low | — | 120 | — | ns |
| UVLO Fault Shutdown Time | | $VDDA_{UV-}$ to VOA low<br>$VDDB_{UV-}$ to VOB low | — | 10 | — | ns |
| UVLO fault to RDY | t_FLT | | — | 92 | — | ns |
| Minimum Pulse Width | | | — | 30 | — | ns |
| Propagation Delay<br>VDDA/B = 12 V<br>$C_L$ = 0 pF | $t_{pHL}$, $t_{pLH}$ | Si82390/1/2/3/5/6/7 (with no de-glitch) | 20 | 30 | 40 | ns |
| | $t_{pHL}$ | Si82394/8 (with no de-glitch) | 20 | 30 | 40 | ns |
| | $t_{pLH}$ | Si82394/8 (with no de-glitch; measured with 6 kΩ RDT resistor; includes minimum dead time) | 35 | 45 | 55 | ns |
| | $t_{pHL}$ | Si82394xx4/8xx4 (have de-glitch) | 60 | 77 | 95 | ns |
| | $t_{pLH}$ | Si82394xx4/8xx4 (have de-glitch and measured with 6 kΩ RDT resistor; includes minimum dead time and de-glitch delay) | 99 | 116 | 135 | ns |
| Pulse Width Distortion $\lvert t_{PLH} - t_{PHL} \rvert$ | PWD | VDDA/B = 12 V<br>$C_L$ = 0 pF | — | 2.7 | 5.60 | ns |
| Programmed Dead Time for product options with 40–600 ns dead time setting range | DT | RDT = 6 kΩ | 27 | 38 | 57 | ns |
| | | RDT = 15 kΩ | 70 | 90 | 130 | |
| | | RDT = 100 kΩ | 450 | 590 | 750 | |

| Parameter | Symbol | Test Condition | Min | Typ | Max | Unit |
|---|---|---|---|---|---|---|
| Output Rise and Fall Time | $t_R$,$t_F$ | $C_L$ = 200 pF | — | — | 12 | ns |
| Shutdown Time from Enable False | $t_{SD}$ | All options with no de-glitch | — | — | 60 | ns |
| | | All options with de-glitch | — | — | 113 | |
| Restart Time from Enable True | $t_{RESTART}$ | All options with no de-glitch | — | — | 60 | ns |
| | | All options with de-glitch | — | — | 95 | |
| Device Start-up Time Input | | Time from VDDI_ = VDDI_UV+ to VOA, VOB = VIA, VIB | — | | — | |
| Si82390/4/5/7 | $t_{START_SAFE}$ | | | 1 | | ms |
| Si82391/2/3/6/8 | $t_{START}$ | | | 40 | | µs |
| Device Start-up Time Output | $t_{START_OUT}$ | Time from VDDA/B = VDDA/B_UV+ to VOA, VOB = VIA, VIB | — | 60 | — | µs |
| Common Mode Transient Immunity | CMTI | VIA, VIB, PWM = VDDI or 0 V<br>$V_{CM}$ = 1500 V | 35 | 100 | — | kV/µs |

**Note:**

1. 2.5 V < VDDI < 5.5 V; 6.5 V < VDDA, VDDB < 24 V; $T_A$ = –40 to +125 °C.
2. Typical specs at 25 °C, VDDA = VDDB = 12 V for 5 V and 8 V UVLO devices, otherwise 15 V.

The following figures depict sink current, source current, and common-mode transient immunity test circuits, respectively.

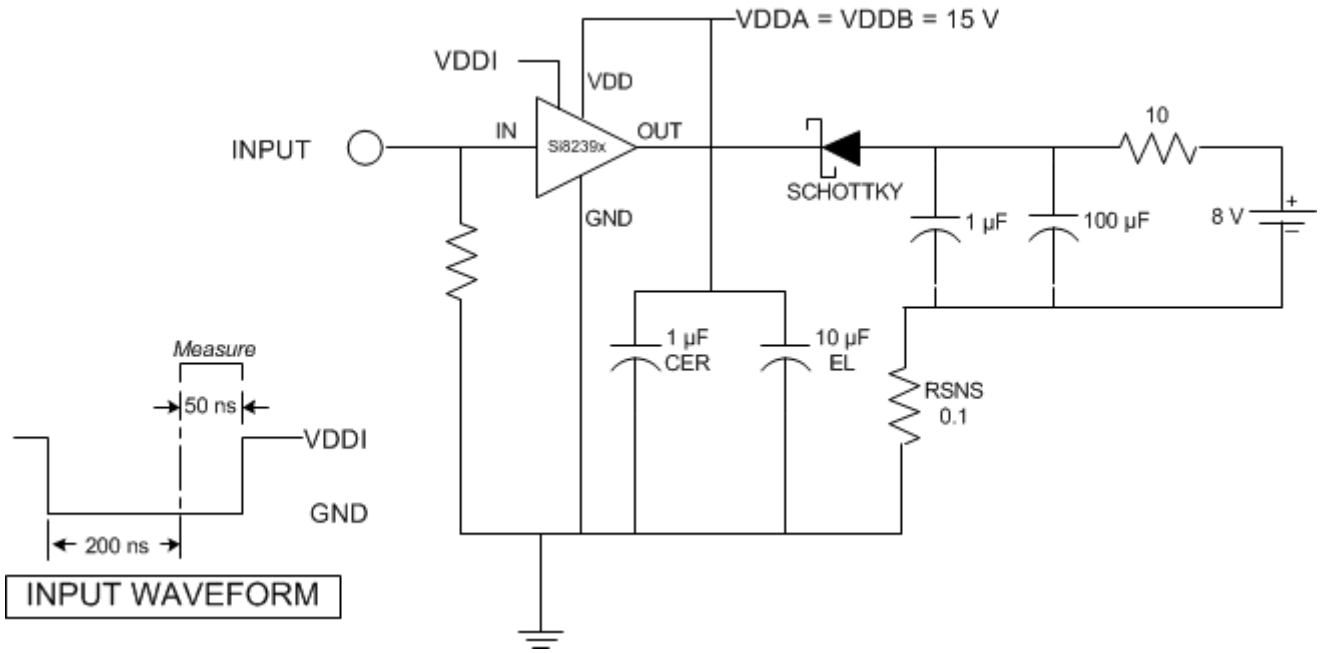


**Figure 4.1. IOL Sink Current Test**

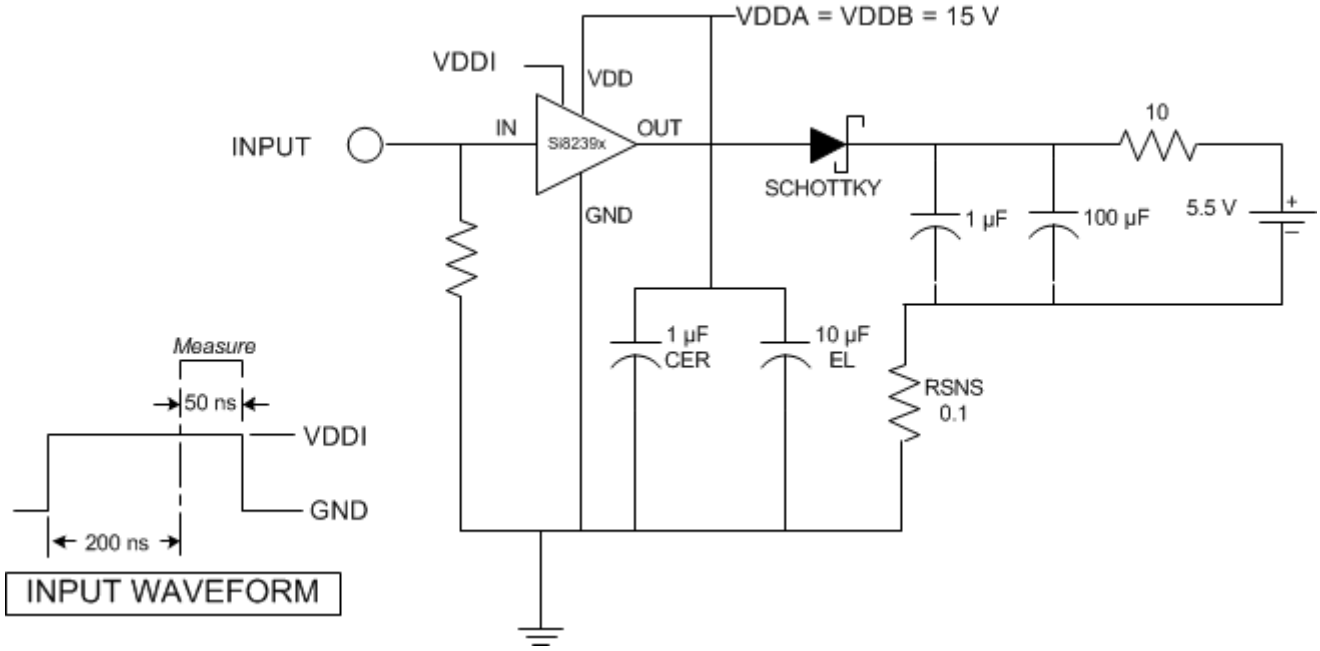


**Figure 4.2. IOH Source Current Test**

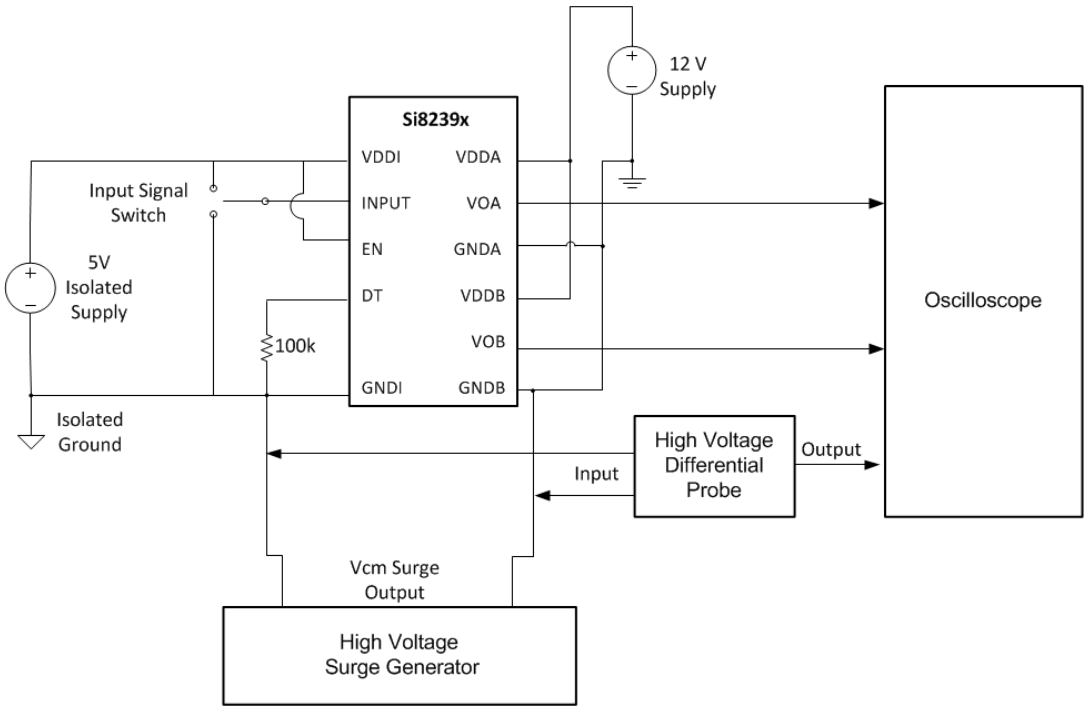


**Figure 4.3. CMTI Test Circuit**

**Table 4.2. Regulatory Information[1,2,3]**

| |
|---|
| **CSA** |
| The Si8239x is certified under CSA Component Acceptance Notice 5A. For more details, see File 232873. |
| 60950-1: Up to 600 $V_{RMS}$ reinforced insulation working voltage; up to 1000 $V_{RMS}$ basic insulation working voltage. |
| **VDE** |
| The Si8239x is certified according to VDE 0884-10. For more details, see File 5006301-4880-0001. |
| VDE 0884-10: Up to 891 $V_{peak}$ for basic insulation working voltage. |
| 60950-1: Up to 600 $V_{RMS}$ reinforced insulation working voltage; up to 1000 $V_{RMS}$ basic insulation working voltage. |
| **UL** |
| The Si8239x is certified under UL1577 component recognition program. For more details, see File E257455. |
| Rated up to 5000 $V_{RMS}$ isolation voltage for basic protection. |
| **CQC** |
| The Si8239x is certified under GB4943.1-2011. For more details, see certificates CQCxxx (TBD). |
| Rated up to 600 $V_{RMS}$ reinforced insulation working voltage; up to 1000 $V_{RMS}$ basic insulation working voltage. |
| **Note:**<br>1. Regulatory Certifications apply to 2.5 $kV_{RMS}$ rated devices which are production tested to 3.0 $kV_{RMS}$ for 1 sec.<br>2. Regulatory Certifications apply to 5.0 $kV_{RMS}$ rated devices which are production tested to 6.0 $kV_{RMS}$ for 1 sec.<br>3. For more information, see Ordering Guide. |

**Table 4.3. Insulation and Safety-Related Specifications**

| Parameter | Symbol | Test Condition | Value | | Unit |
|---|---|---|---|---|---|
| | | | WBSOIC-16 | NBSOIC-16 | |
| Nominal Air Gap (Clearance)[1] | L(1O1) | | 8.0 | 4.01 | mm |
| Nominal External Tracking (Creepage) | L(1O2) | | 8.0 | 4.01 | mm |
| Minimum Internal Gap (Internal Clearance) | | | 0.014 | 0.014 | mm |
| Tracking Resistance (Proof Tracking Index) | PTI | IEC60112 | 600 | 600 | V |
| Erosion Depth | ED | | 0.019 | 0.019 | mm |
| Resistance (Input-Output)[2] | $R_{IO}$ | | $10^{12}$ | $10^{12}$ | Ω |
| Capacitance (Input-Output)[2] | $C_{IO}$ | f = 1 MHz | 1.4 | 1.4 | pF |
| Input Capacitance[3] | $C_I$ | | 4.0 | 4.0 | pF |

**Note:**

1. The values in this table correspond to the nominal creepage and clearance values as detailed in 7. Package Outline: 16-Pin Wide Body SOIC and 9. Package Outline: 16-Pin Narrow Body SOIC. VDE certifies the clearance and creepage limits as 4.7 mm minimum for the NB SOIC-16 and 8.5 mm minimum for the WB SOIC-16 package. UL does not impose a clearance and creepage minimum for component level certifications. CSA certifies the clearance and creepage limits as 3.9 mm minimum for the NB SOIC16 and 7.6 mm minimum for the WB SOIC-16 package.
2. To determine resistance and capacitance, the Si8239x is converted into a 2-terminal device. Pins 1–8 are shorted together to form the first terminal,and pins 9–16 are shorted together to form the second terminal. The parameters are then measured between these two terminals.
3. Measured from input pin to ground.

**Table 4.4. IEC 60664-1 (VDE 0884) Ratings**

| Parameter | Test Condition | Specification | |
|---|---|---|---|
| | | WB SOIC-16 | NB SOIC-16 |
| Basic Isolation Group | Material Group | I | I |
| Installation Classification | Rated Mains Voltages < 150 $V_{RMS}$ | I-IV | I-IV |
| | Rated Mains Voltages < 300 $V_{RMS}$ | I-IV | I-III |
| | Rated Mains Voltages < 400 $V_{RMS}$ | I-III | I-II |
| | Rated Mains Voltages < 600 $V_{RMS}$ | I-III | I-II |

**Table 4.5. IEC 60747-5-5 Insulation Characteristics**

| Parameter | Symbol | Test Condition | Characteristic | | Unit |
|---|---|---|---|---|---|
| | | | WB SOIC-16 | NB SOIC-16 | |
| Maximum Working Insulation Voltage | $V_{IORM}$ | | 891 | 560 | V peak |
| Input to Output Test Voltage | $V_{PR}$ | Method b1 ($V_{IORM}$ x 1.875 = $V_{PR}$, 100% Production Test, $t_m$ = 1 sec, Partial Discharge < 5 pC) | 1671 | 1050 | V peak |
| Transient Overvoltage | $V_{IOTM}$ | t = 60 sec | 6000 | 4000 | V peak |
| Pollution Degree (DIN VDE 0110, See Table 4.1 Electrical Characteristics[1,2] on page 20) | | | 2 | 2 | |
| Insulation Resistance at $T_S$, $V_{IO}$ = 500 V | $R_S$ | | $>10^9$ | $>10^9$ | Ω |

**Note:**

1. Maintenance of the safety data is ensured by protective circuits. The Si8239x provides a climate classification of 40/125/21.

**Table 4.6. IEC Safety Limiting Values[1]**

| Parameter | Symbol | Test Condition | WB SOIC-16 | NB SOIC-16 | Unit |
|---|---|---|---|---|---|
| Safety Temperature | $T_S$ | | 150 | 150 | °C |
| Safety Input Current | $I_S$ | $\theta_{JA}$ = 100 °C/W (WB SOIC-16), 105 °C/W (NB SOIC-16)<br>$V_{DDI}$ = 5.5 V,<br>$V_{DDA}$ = $V_{DDB}$ = 24 V,<br>$T_J$ = 150 °C, $T_A$ = 25 °C | 50 | 50 | mA |
| Device Power Dissipation[2] | $P_D$ | | 1.2 | 1.2 | W |

**Note:**

1. Maximum value allowed in the event of a failure. Refer to the thermal derating curve in Figure 4.4 WB SOIC-16, NB SOIC-16 Thermal Derating Curve, Dependence of Safety Limiting Values with Case Temperature per VDE 0884-10 on page 28.
2. The Si8239x is tested with VDDI = 5.5 V, VDDA = VDDB = 24 V, TJ = 150 ºC, CL = 100 pF, input 2 MHz 50% duty cycle square wave.

**Table 4.7. Thermal Characteristics**

| Parameter | Symbol | Min | Typ | Max | Unit |
|---|---|---|---|---|---|
| IC Junction-to-Air Thermal Resistance (WB SOIC-16) | θJA | --- | 100 | --- | °C/W |
| IC Junction-to-Air Thermal Resistance (NB SOIC-16) | θJA | --- | 105 | --- | °C/W |
| Junction Temperature | Tj | --- | --- | 150 | °C |

**Table 4.8. Absolute Maximum Ratings[1]**

| Parameter | Symbol | Min | Max | Unit |
|---|---|---|---|---|
| Ambient Temperature under Bias | $T_A$ | –40 | +125 | °C |
| Storage Temperature | $T_{STG}$ | –65 | +150 | °C |
| Junction Temperature | $T_J$ | — | +150 | °C |
| Input-side Supply Voltage | VDDI | –0.6 | 6.0 | V |
| Driver-side Supply Voltage | VDDA, VDDB | –0.6 | 30 | V |
| Voltage on any Pin with respect to Ground | $V_{IO}$ | –0.5 | VDD + 0.5 | V |
| Peak Output Current ($t_{PW}$ = 10 µs, duty cycle = 0.2%) | $I_{OPK}$ | — | 4.0 | A |
| Lead Solder Temperature (10 s) | | — | 260 | °C |
| ESD per AEC-Q100 | HBM | — | 4 | kV |
| | CDM | — | 2 | kV |
| Maximum Isolation (Input to Output) (1 s) WB SOIC-16 | | — | 6500 | $V_{RMS}$ |
| Maximum Isolation (Output to Output) (1 s) WB SOIC-16 | | — | 2500 | $V_{RMS}$ |
| Maximum Isolation (Input to Output) (1 s) NB SOIC-16 | | — | 4500 | $V_{RMS}$ |
| Maximum Isolation (Output to Output) (1 s) NB SOIC-16 | | — | 2500 | $V_{RMS}$ |

**Note:**

1. Permanent device damage may occur if the absolute maximum ratings are exceeded. Functional operation should be restricted to the conditions as specified in the operational sections of this data sheet. Exposure to absolute maximum rating conditions for extended periods may affect device reliability.

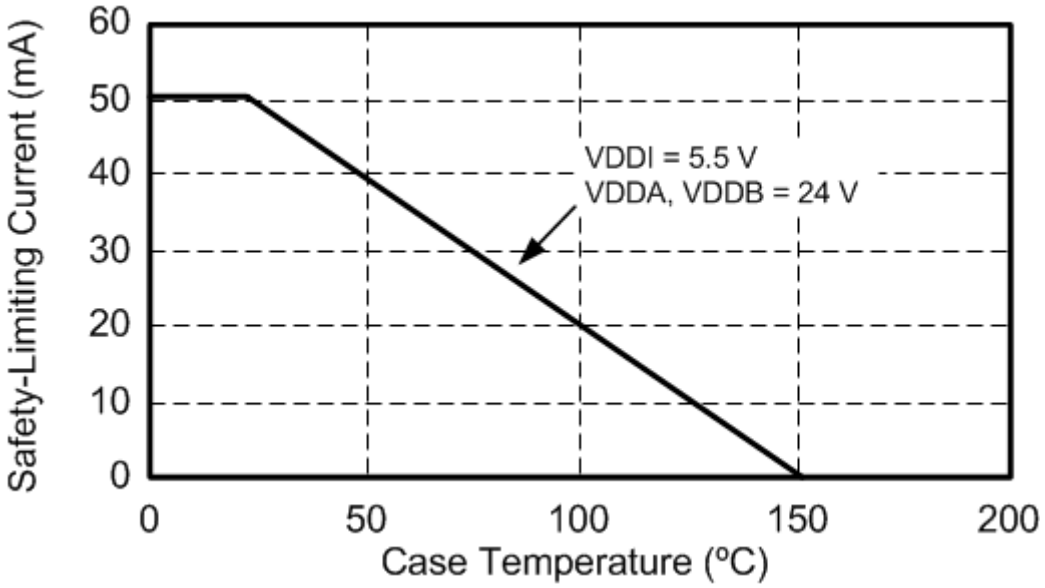


**Figure 4.4. WB SOIC-16, NB SOIC-16 Thermal Derating Curve, Dependence of Safety Limiting Values with Case Temperature per VDE 0884-10**

## 5. Top-Level Block Diagrams

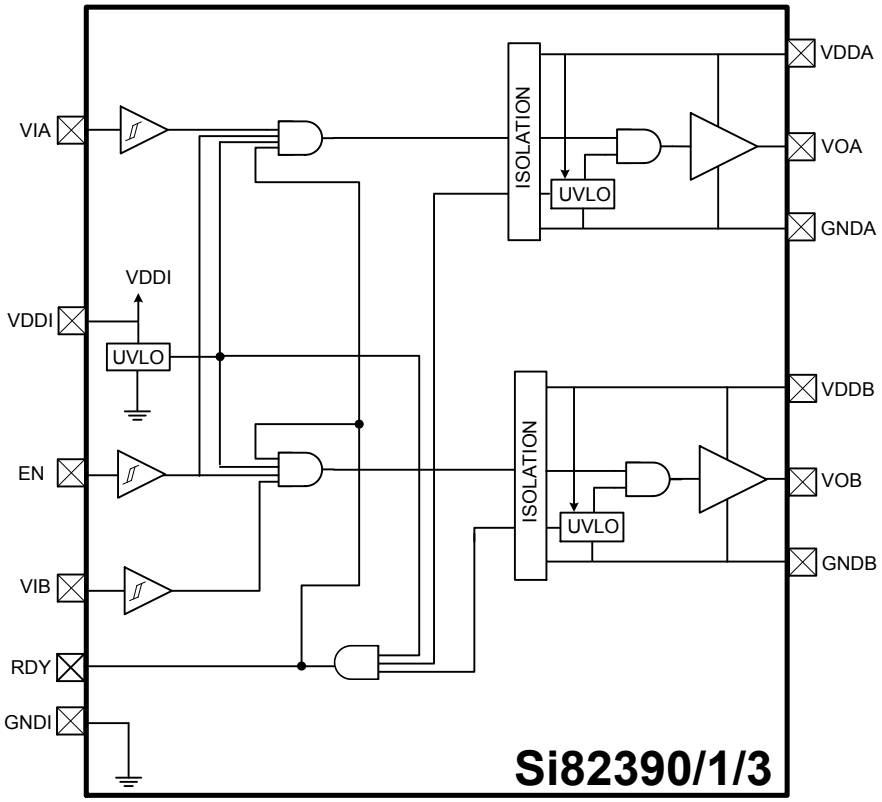


**Figure 5.1. Si82390/1/3 Dual Isolated Drivers with Enhanced UVLO Safety**

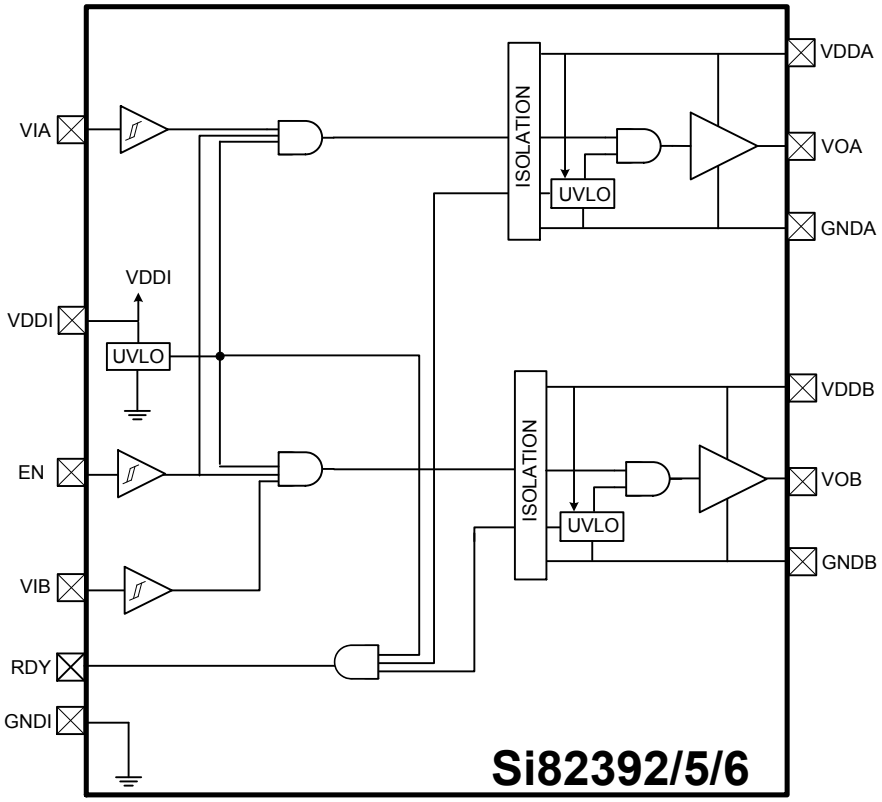


**Figure 5.2. Si82392/5/6 Dual Isolated Drivers with RDY Pin**

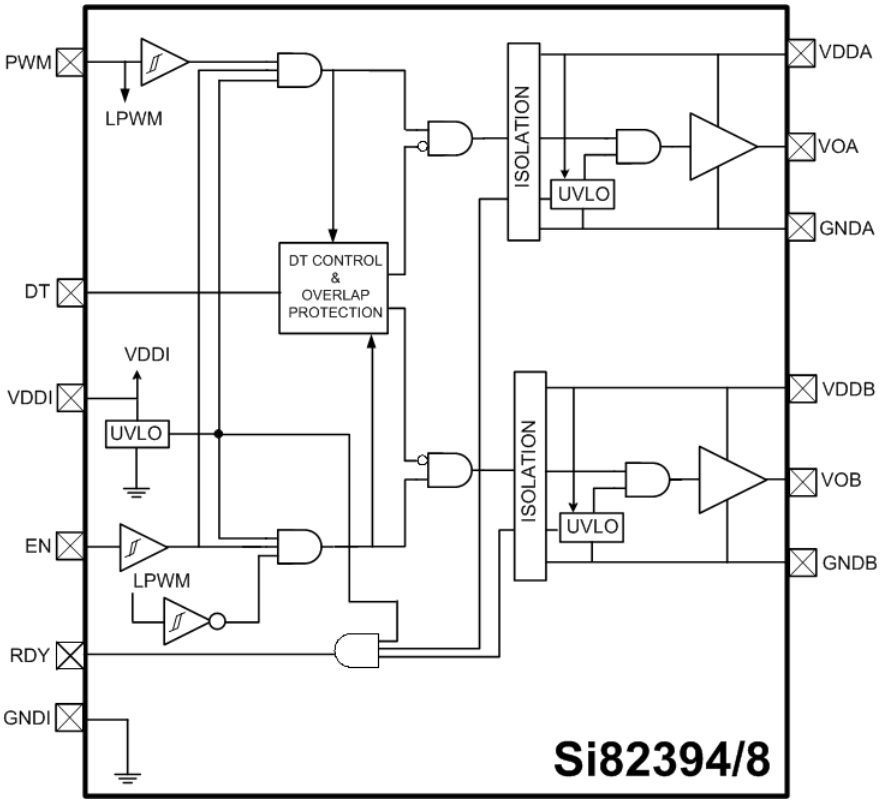


**Figure 5.3. Si82394/98 Single-Input High-Side/Low-Side Isolated Drivers**

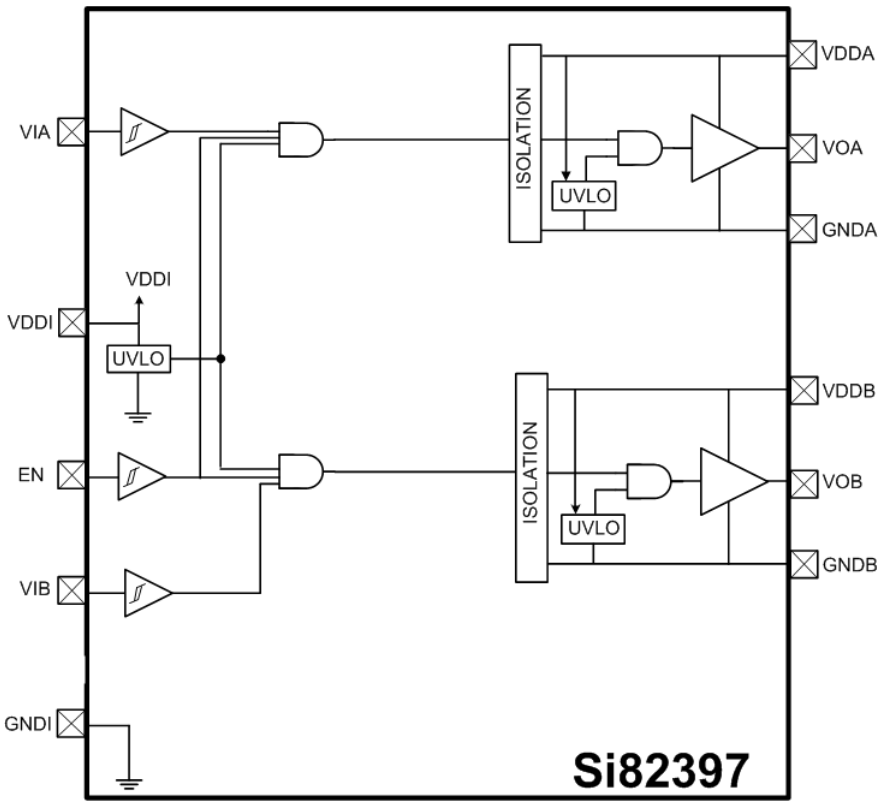


**Figure 5.4. Si82397 Dual Isolated Drivers**

# 6. Pin Descriptions

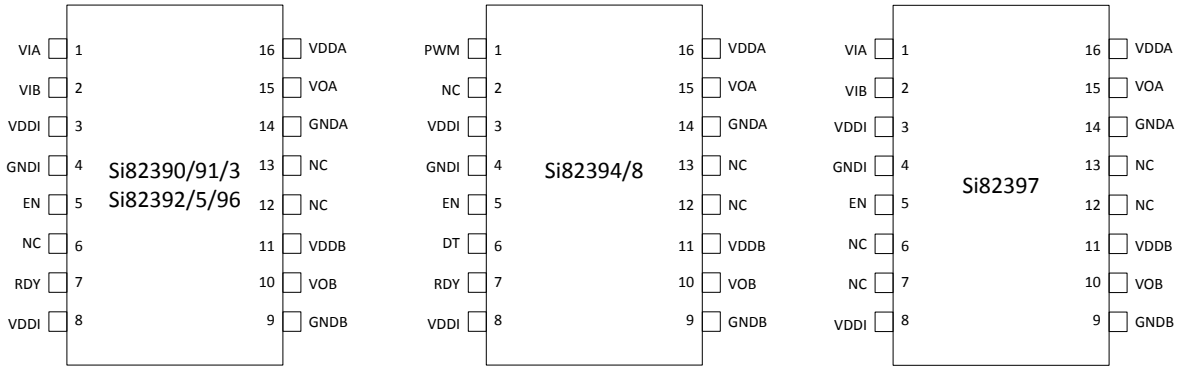


**Figure 6.1. Si8239x SOIC-16**

**Table 6.1. Pin Descriptions**

| Pin Name | Description |
|---|---|
| GNDI | Input-side ground terminal. |
| PWM | PWM input |
| VIA | Non-inverting logic input terminal for Driver A. |
| VIB | Non-inverting logic input terminal for Driver B. |
| VDDI | Input-side power supply terminal; connect to a source of 2.5 to 5.5 V. |
| EN | Device ENABLE. When low or NC, this input unconditionally drives outputs VOA, VOB LOW. When high, device is enabled to perform in normal operating mode. It is strongly recommended that this input be connected to external logic level to avoid erroneous operation due to capacitive noise coupling. |
| DT | Dead time programming input. The value of the resistor connected from DT to ground sets the dead time between output transitions of VOA and VOB. |
| NC | No connection. |
| GNDB | Ground terminal for Driver B. |
| VOB | Driver B output (low-side driver). |
| VDDB | Driver B power supply voltage terminal; connect to a source of 6.5 to 24 V. |
| GNDA | Ground terminal for Driver A. |
| VOA | Driver A output (high-side driver). |
| VDDA | Driver A power supply voltage terminal; connect to a source of 6.5 to 24 V. |
| RDY | Power ready on secondary side for Driver A and Driver B (both UVLO thresholds for VDDA and VDDB need to be crossed). High state indicates UVLO thresholds crossed, low state indicates UVLO low condition. No reset is necessary. |

## 7. Package Outline: 16-Pin Wide Body SOIC

The following figure illustrates the package details for the Si8239x in a 16-Pin Wide Body SOIC. The table lists the values for the dimensions shown in the illustration.

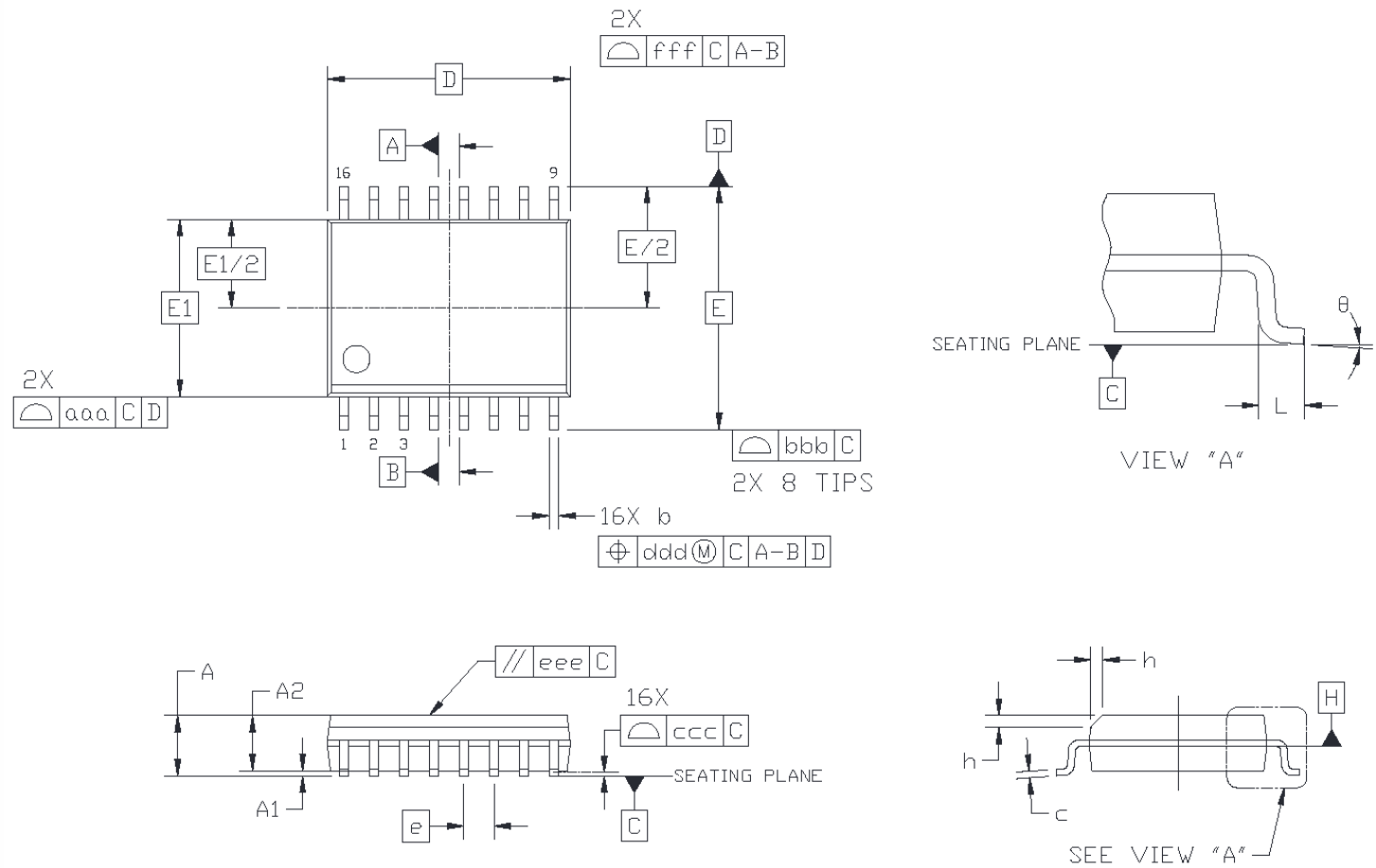


**Figure 7.1. 16-Pin Wide Body SOIC**

**Table 7.1. Package Diagram Dimensions**

| Symbol | Millimeters | |
|---|---|---|
| | Min | Max |
| A | — | 2.65 |
| A1 | 0.10 | 0.30 |
| A2 | 2.05 | — |
| b | 0.31 | 0.51 |
| c | 0.20 | 0.33 |
| D | 10.30 BSC | |
| E | 10.30 BSC | |
| E1 | 7.50 BSC | |
| e | 1.27 BSC | |
| L | 0.40 | 1.27 |
| h | 0.25 | 0.75 |

| Symbol | Millimeters | |
|---|---|---|
| | Min | Max |
| θ | 0° | 8° |
| aaa | — | 0.10 |
| bbb | — | 0.33 |
| ccc | — | 0.10 |
| ddd | — | 0.25 |
| eee | — | 0.10 |
| fff | — | 0.20 |

**Note:**

1. All dimensions shown are in millimeters (mm) unless otherwise noted.
2. Dimensioning and Tolerancing per ANSI Y14.5M-1994.
3. This drawing conforms to JEDEC Outline MS-013, Variation AA.
4. Recommended reflow profile per JEDEC J-STD-020 specification for small body, lead-free components.

## 8. Land Pattern: 16-Pin Wide Body SOIC

The following figure illustrates the recommended land pattern details for the Si8239x in a 16-Pin Wide-Body SOIC. The table lists the values for the dimensions shown in the illustration.

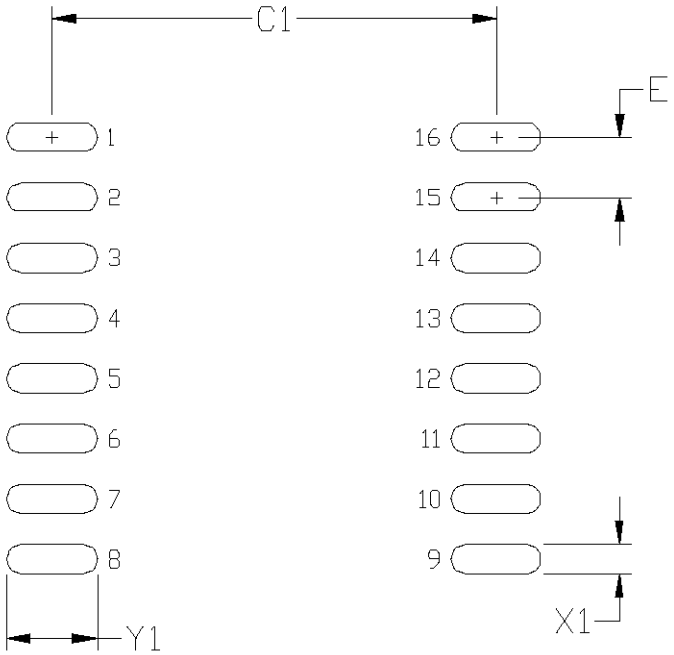


**Figure 8.1. 16-Pin Wide Body SOIC PCB Land Pattern**

**Table 8.1. 16-Pin Wide Body SOIC Land Pattern Dimensions**

| Dimension | Feature | (mm) |
|---|---|---|
| C1 | Pad Column Spacing | 9.40 |
| E | Pad Row Pitch | 1.27 |
| X1 | Pad Width | 0.60 |
| Y1 | Pad Length | 1.90 |

**Note:**

1. This Land Pattern Design is based on IPC-7351 pattern SOIC127P1032X265-16AN for Density Level B (Median Land Protrusion).
2. All feature sizes shown are at Maximum Material Condition (MMC) and a card fabrication tolerance of 0.05 mm is assumed.

## 9. Package Outline: 16-Pin Narrow Body SOIC

The following figure illustrates the package details for the Si8239x in a 16-Pin Narrow-Body SOIC. The table lists the values for the dimensions shown in the illustration.

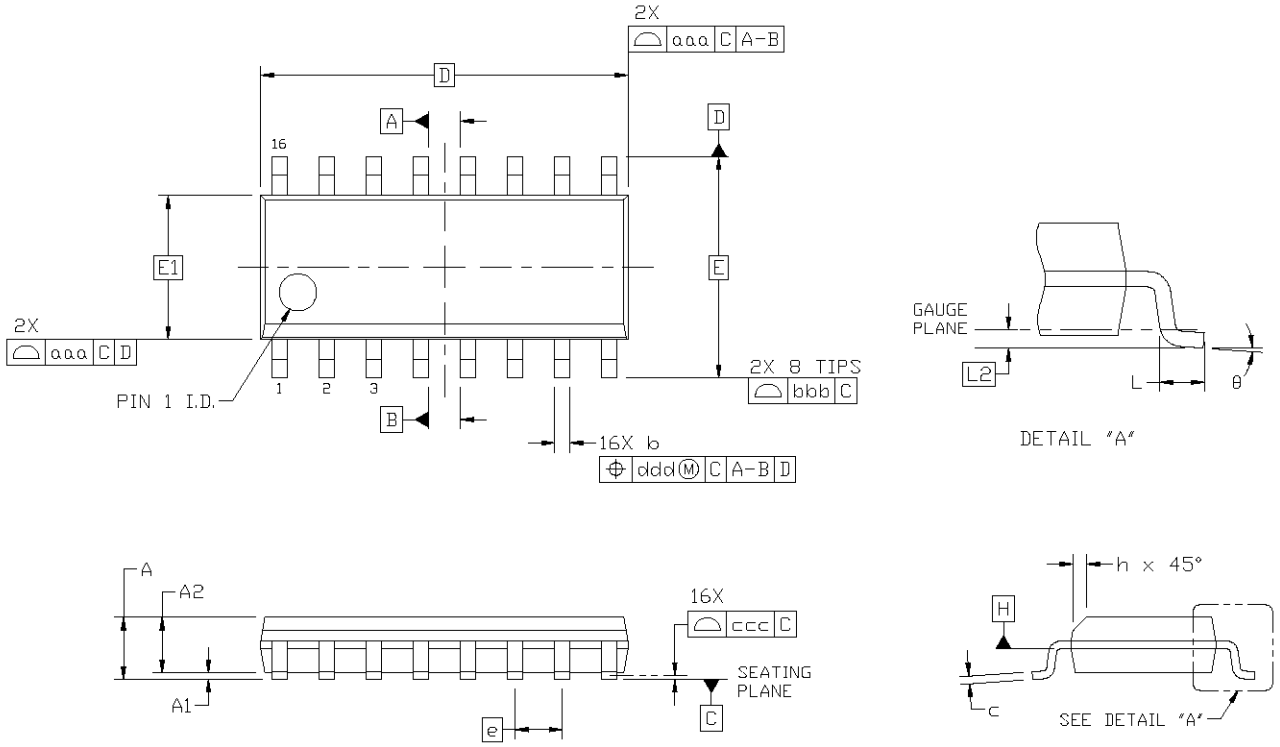


**Figure 9.1. 16-Pin Narrow Body SOIC**

**Table 9.1. Package Diagram Dimensions**

| Dimension | Min | Max | | Dimension | Min | Max |
|---|---|---|---|---|---|---|
| A | — | 1.75 | | L | 0.40 | 1.27 |
| A1 | 0.10 | 0.25 | | L2 | 0.25 BSC | |
| A2 | 1.25 | — | | h | 0.25 | 0.50 |
| b | 0.31 | 0.51 | | θ | 0° | 8° |
| c | 0.17 | 0.25 | | aaa | 0.10 | |
| D | 9.90 BSC | | | bbb | 0.20 | |
| E | 6.00 BSC | | | ccc | 0.10 | |
| E1 | 3.90 BSC | | | ddd | 0.25 | |
| e | 1.27 BSC | | | | | |

**Note:**

1. All dimensions shown are in millimeters (mm) unless otherwise noted.
2. Dimensioning and Tolerancing per ANSI Y14.5M-1994.
3. This drawing conforms to the JEDEC Solid State Outline MS-012, Variation AC.
4. Recommended card reflow profile is per the JEDEC/IPC J-STD-020 specification for Small Body Components.

## 10. Land Pattern: 16-Pin Narrow Body SOIC

The following figure illustrates the recommended land pattern details for the Si8239x in a 16-Pin Narrow-Body SOIC. The table lists the values for the dimensions shown in the illustration.

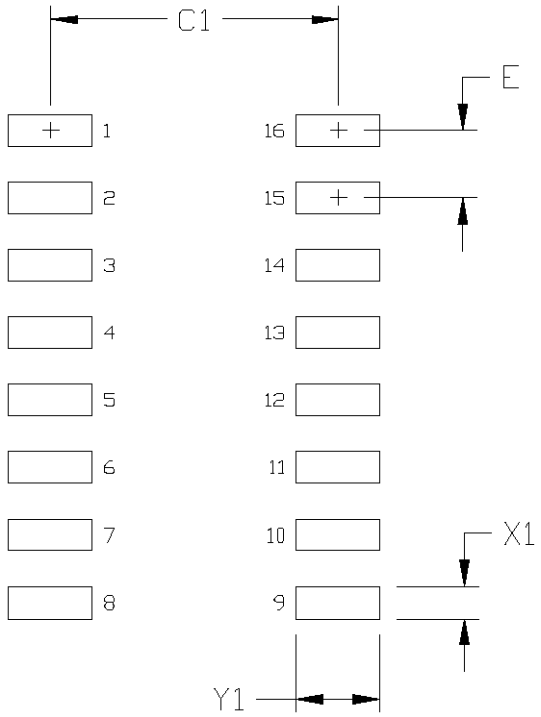


**Figure 10.1. 16-Pin Narrow Body SOIC PCB Land Pattern**

**Table 10.1. 16-Pin Narrow Body SOIC Land Pattern Dimensions**

| Dimension | Feature | (mm) |
|---|---|---|
| C1 | Pad Column Spacing | 5.40 |
| E | Pad Row Pitch | 1.27 |
| X1 | Pad Width | 0.60 |
| Y1 | Pad Length | 1.55 |

**Note:**

1. This Land Pattern Design is based on IPC-7351 pattern SOIC127P600X165-16N for Density Level B (Median Land Protrusion).
2. All feature sizes shown are at Maximum Material Condition (MMC) and a card fabrication tolerance of 0.05 mm is assumed.

# 11. Top Markings

## 11.1 Si8239x Top Marking (16-Pin Wide Body SOIC)

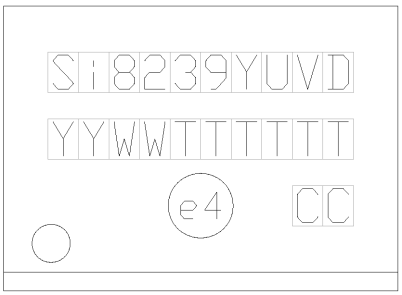


## 11.2 Top Marking Explanation (16-Pin Wide Body SOIC)

| | | |
|---|---|---|
| **Line 1 Marking:** | Base Part Number<br>Ordering Options<br><br>See Ordering Guide for more information. | Si8239 = ISOdriver product series<br>Y = Output configuration: 0, 1, 3, 4, 5, 6, 7, 8<br>0, 1, 5, 6, 7 = Dual drivers<br>3 = Dual input (VIA, VIB) High Side/Low Side drivers<br>4, 8 = PWM input High side/Low side drivers<br>U = UVLO level: A, B, C<br>A = 6 V; B = 8 V; C = 12 V<br>V = Isolation rating: B, D<br>B = 2.5 kV; D = 5.0 kV<br>D = Dead time setting range: none, 4<br>none = 10–200 ns; 4 = 40–600 ns |
| **Line 2 Marking:** | YY = Year<br>WW = Workweek | Assigned by the Assembly House. Corresponds to the year and workweek of the mold date. |
| | TTTTTT = Mfg Code | Manufacturing Code from Assembly Purchase Order form. |
| **Line 3 Marking:** | Circle = 1.5 mm Diameter<br>(Center Justified) | “e4” Pb-Free Symbol |
| | Country of Origin<br>ISO Code Abbreviation | TW = Taiwan |

### 11.3 Si8239x Top Marking (16-Pin Narrow Body SOIC)

### 11.4 Top Marking Explanation (16-Pin Narrow Body SOIC)

| | | |
|---|---|---|
| **Line 1 Marking:** | Base Part Number<br><br>Ordering Options<br><br>See Ordering Guide for more information. | Si8239 = ISOdriver product series<br><br>Y = Output configuration: 0, 1, 2, 4, 5, 6, 7, 8<br><br>0, 1, 5, 6, 7 = Dual drivers<br><br>2 = Dual input (VIA, VIB) High side/Low side drivers<br><br>4, 8 = PWM input High side/Low side drivers<br><br>U = UVLO level: A, B, C<br><br>A = 6 V; B = 8 V; C = 12 V<br><br>V = Isolation rating: B, D<br><br>B = 2.5 kV; D = 5.0 kV<br><br>D = Dead time setting range: none, 4<br><br>none = 10–200; 4 = 40–600 |
| **Line 2 Marking:** | YY = Year<br><br>WW = Workweek | Assigned by the Assembly House. Corresponds to the year and workweek of the mold date. |
| | TTTTTT = Mfg Code | Manufacturing Code from Assembly Purchase Order form. |

# 12. Revision History

**Revision 1.01**

July 2018

- Added Automotive-grade information including features, applications, and Ordering Guide table.

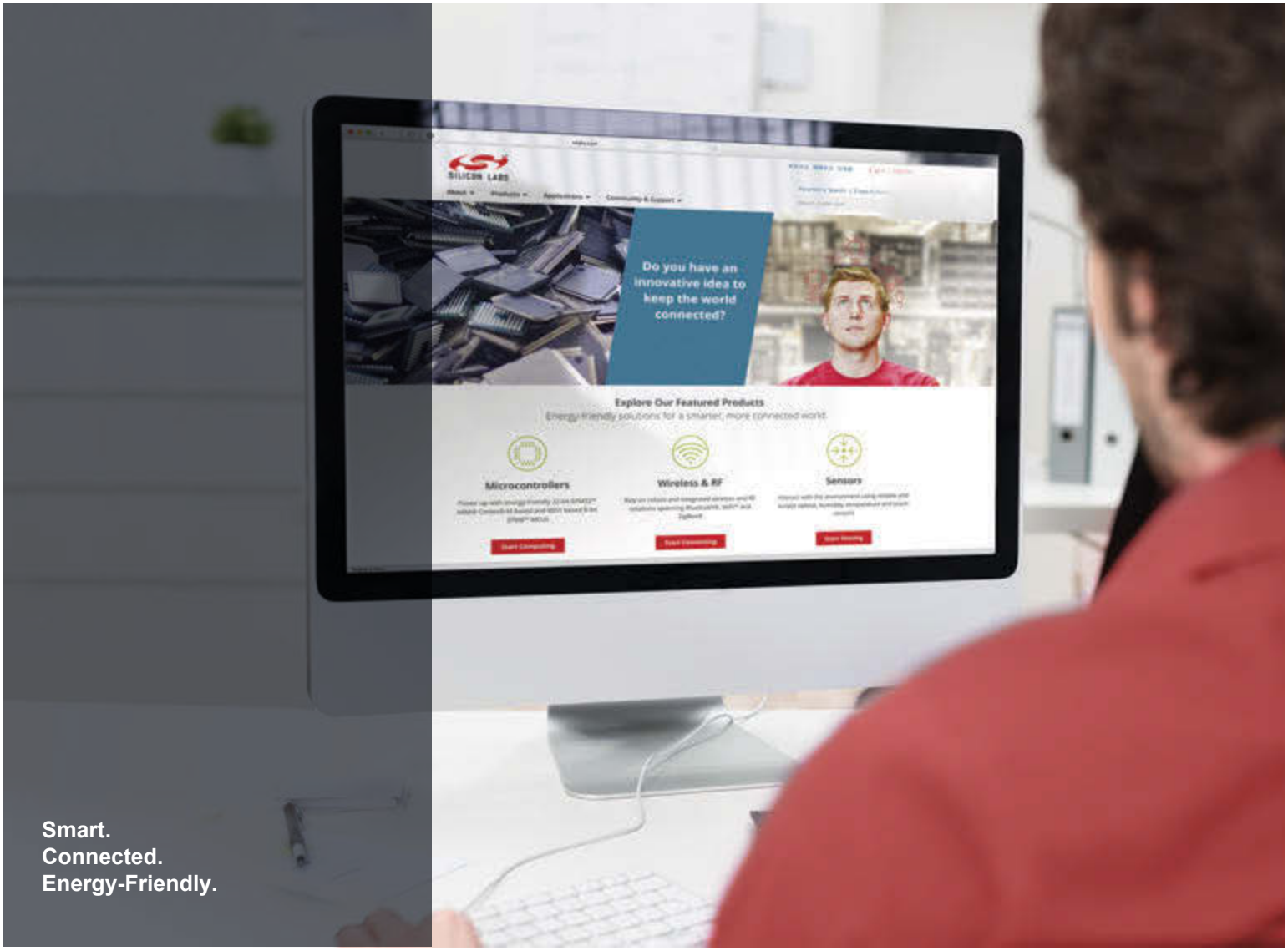


**Products**
*www.silabs.com/products*

**Quality**
*www.silabs.com/quality*

**Support and Community**
*community.silabs.com*

**Disclaimer**
Silicon Labs intends to provide customers with the latest, accurate, and in-depth documentation of all peripherals and modules available for system and software implementers using or intending to use the Silicon Labs products. Characterization data, available modules and peripherals, memory sizes and memory addresses refer to each specific device, and "Typical" parameters provided can and do vary in different applications. Application examples described herein are for illustrative purposes only. Silicon Labs reserves the right to make changes without further notice and limitation to product information, specifications, and descriptions herein, and does not give warranties as to the accuracy or completeness of the included information. Silicon Labs shall have no liability for the consequences of use of the information supplied herein. This document does not imply or express copyright licenses granted hereunder to design or fabricate any integrated circuits. The products are not designed or authorized to be used within any Life Support System without the specific written consent of Silicon Labs. A "Life Support System" is any product or system intended to support or sustain life and/or health, which, if it fails, can be reasonably expected to result in significant personal injury or death. Silicon Labs products are not designed or authorized for military applications. Silicon Labs products shall under no circumstances be used in weapons of mass destruction including (but not limited to) nuclear, biological or chemical weapons, or missiles capable of delivering such weapons.

**Trademark Information**
Silicon Laboratories Inc.® , Silicon Laboratories®, Silicon Labs®, SiLabs® and the Silicon Labs logo®, Bluegiga®, Bluegiga Logo®, Clockbuilder®, CMEMS®, DSPLL®, EFM®, EFM32®, EFR, Ember®, Energy Micro, Energy Micro logo and combinations thereof, "the world's most energy friendly microcontrollers", Ember®, EZLink®, EZRadio®, EZRadioPRO®, Gecko®, ISOmodem®, Micrium, Precision32®, ProSLIC®, Simplicity Studio®, SiPHY®, Telegesis, the Telegesis Logo®, USBXpress®, Zentri, Z-Wave and others are trademarks or registered trademarks of Silicon Labs. ARM, CORTEX, Cortex-M3 and THUMB are trademarks or registered trademarks of ARM Holdings. Keil is a registered trademark of ARM Limited. All other products or brand names mentioned herein are trademarks of their respective holders.

**Silicon Laboratories Inc.**
**400 West Cesar Chavez**
**Austin, TX 78701**
**USA**

**http://www.silabs.com**

Мы молодая и активно развивающаяся компания в области поставок электронных компонентов. Мы поставляем электронные компоненты отечественного и импортного производства напрямую от производителей и с крупнейших складов мира.

Благодаря сотрудничеству с мировыми поставщиками мы осуществляем комплексные и плановые поставки широчайшего спектра электронных компонентов.

Собственная эффективная логистика и склад в обеспечивает надежную поставку продукции в точно указанные сроки по всей России.

Мы осуществляем техническую поддержку нашим клиентам и предпродажную проверку качества продукции. На все поставляемые продукты мы предоставляем гарантию .

Осуществляем поставки продукции под контролем ВП МО РФ на предприятия военно-промышленного комплекса России , а также работаем в рамках 275 ФЗ с открытием отдельных счетов в уполномоченном банке. Система менеджмента качества компании соответствует требованиям ГОСТ ISO 9001.

Минимальные сроки поставки, гибкие цены, неограниченный ассортимент и индивидуальный подход к клиентам являются основой для выстраивания долгосрочного и эффективного сотрудничества с предприятиями радиоэлектронной промышленности, предприятиями ВПК и научно-исследовательскими институтами России.

С нами вы становитесь еще успешнее!

**Наши контакты:**

**Телефон:** +7 812 627 14 35

**Электронная почта:** sales@st-electron.ru

**Адрес:** 198099, Санкт-Петербург, Промышленная ул, дом № 19, литера Н, помещение 100-Н Офис 331