P4C116/P4C116L
ULTRA HIGH SPEED 2K x 8
STATIC CMOS RAMS

FEATURES

- **Full CMOS, 6T Cell**
- **High Speed (Equal Access and Cycle Times)**
  – 10/12/15/20/25/35 ns (Commercial)
  – 15/20/25/35 ns (Military)
- **Low Power Operation**
- **Output Enable Control Function**
- **Single 5V±10% Power Supply**
- **Common Data I/O**
- **Fully TTL Compatible Inputs and Outputs**
- **Produced with PACE II Technology™**
- **Standard Pinout (JEDEC Approved)**
  – 24-Pin 300 mil DIP, SOIC, SOJ
  – 24-Pin Solder Seal Flat Pack
  – 24-Pin Rectangular LCC (300 x 400 mils)
  – 28-Pin Square LCC (450 x 450 mils)
  – 32-Pin Rectangular LCC (450 x 550 mils)
  – 40-Pin Square LCC (480 x 480 mils)

DESCRIPTION

The P4C116/P4C116L are 16,384-bit ultra high-speed static RAMs organized as 2K x 8. The CMOS memories require no clocks or refreshing and have equal access and cycle times. Inputs are fully TTL-compatible. The RAMs operate from a single 5V±10% tolerance power supply. Current drain is typically 10 µA from a 2.0V supply.

Access times as fast as 10 nanoseconds are available, permitting greatly enhanced system operating speeds. CMOS is used to reduce power consumption.

The P4C116 is available in 24-pin 300 mil DIP, SOJ and SOIC packages, a solder seal flatpack and 4 different LCC packages (24, 28, 32, and 40 pin).

FUNCTIONAL BLOCK DIAGRAM

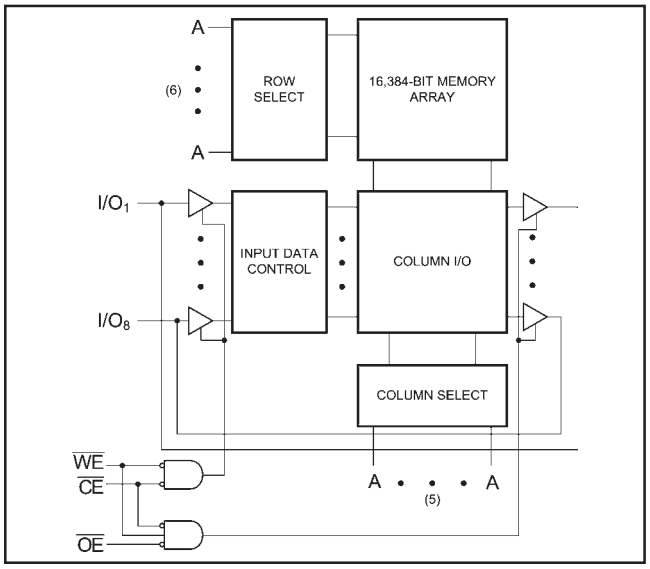

PIN CONFIGURATIONS

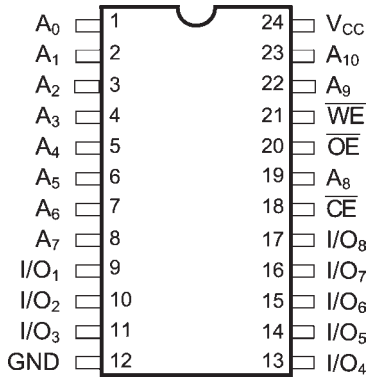

DIP (P4, C4), SOJ (J4), SOIC (S4)
SOLDER SEAL FLAT PACK (FS-1) SIMILAR

LCC configurations at end of datasheet

MAXIMUM RATINGS[1]

Symbol	Parameter	Value	Unit
V_{CC}	Power Supply Pin with Respect to GND	–0.5 to +7	V
V_{TERM}	Terminal Voltage with Respect to GND (up to 7.0V)	–0.5 to V_{CC} +0.5	V
T_A	Operating Temperature	–55 to +125	°C

Symbol	Parameter	Value	Unit
T_{BIAS}	Temperature Under Bias	–55 to +125	°C
T_{STG}	Storage Temperature	–65 to +150	°C
P_T	Power Dissipation	1.0	W
I_{OUT}	DC Output Current	50	mA

RECOMMENDED OPERATING CONDITIONS

Grade[2]	Ambient Temp	Gnd	Vcc
Commercial	0°C to 70°C	0V	5.0V ±10%
Military	-55°C to +125°C	0V	5.0V ±10%

CAPACITANCES[4]

(V_{CC} = 5.0V, T_A = 25°C, f = 1.0MHz)

Symbol	Parameter	Conditions	Typ.	Unit
C_{IN}	Input Capacitance	V_{IN} = 0V	5	pF
C_{OUT}	Output Capacitance	V_{OUT}= 0V	7	pF

DC ELECTRICAL CHARACTERISTICS

Over recommended operating temperature and supply voltage[2]

Symbol	Parameter	Test Conditions	P4C116		P4C116L		Unit
			Min	Max	Min	Max	
V_{IH}	Input High Voltage		2.2	V_{CC} +0.5	2.2	V_{CC} +0.5	V
V_{IL}	Input Low Voltage		–0.5[3]	0.8	–0.5[3]	0.8	V
V_{HC}	CMOS Input High Voltage		V_{CC} –0.2	V_{CC} +0.5	V_{CC} –0.2	V_{CC} +0.5	V
V_{LC}	CMOS Input Low Voltage		–0.5[3]	0.2	–0.5[3]	0.2	V
V_{CD}	Input Clamp Diode Voltage	V_{CC} = Min., I_{IN} = –18 mA		–1.2		–1.2	V
V_{OL}	Output Low Voltage (TTL Load)	I_{OL} = +8 mA, V_{CC} = Min.		0.4		0.4	V
V_{OH}	Output High Voltage (TTL Load)	I_{OH} = –4 mA, V_{CC} = Min.	2.4		2.4		V
I_{LI}	Input Leakage Current	V_{CC} = Max. Mil. V_{IN} = GND to V_{CC} Com'l.	–10 –5	+10 +5	–5 n/a	+5 n/a	µA
I_{LO}	Output Leakage Current	V_{CC} = Max., $\overline{CE}$ = V_{IH}, Mil. V_{OUT} = GND to V_{CC} Com'l.	–10 –5	+10 +5	–5 n/a	+5 n/a	µA
I_{SB}	Standby Power Supply Current (TTL Input Levels)	$\overline{CE} \geq V_{IH,}$ Mil. V_{CC}= Max, Ind./Com'l. f = Max., Outputs Open	— —	30 20	— —	20 n/a	mA
I_{SB1}	Standby Power Supply Current (CMOS Input Levels)	$\overline{CE} \geq V_{HC}$, Mil. V_{CC}= Max, Ind./Com'l. f = 0, Outputs Open $V_{IN} \leq V_{LC}$ or $V_{IN} \geq V_{HC}$	— —	15 10	— —	1 n/a	mA

n/a = Not Applicable

DATA RETENTION CHARACTERISTICS (P4C116L Military Temperature Only)

Symbol	Parameter	Test Conditons	Min	Typ.* V_{CC} = 2.0V	Typ.* V_{CC} = 3.0V	Max V_{CC} = 2.0V	Max V_{CC} = 3.0V	Unit
V_{DR}	V_{CC} for Data Retention		2.0					V
I_{CCDR}	Data Retention Current	$\overline{CE} \geq V_{CC} - 0.2V$, $V_{IN} \geq V_{CC} - 0.2V$ or $V_{IN} \leq 0.2V$		10	15	600	900	µA
t_{CDR}	Chip Deselect to Data Retention Time		0					ns
t_R†	Operation Recovery Time		t_{RC}§					ns

*T_A = +25°C

§t_{RC} = Read Cycle Time

† This parameter is guaranteed but not tested.

DATA RETENTION WAVEFORM

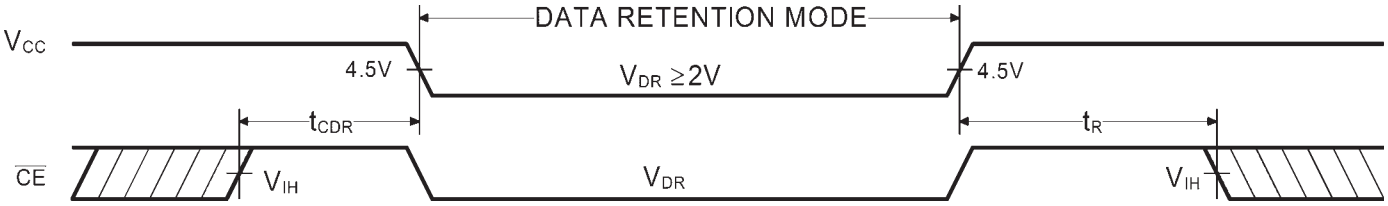

POWER DISSIPATION CHARACTERISTICS VS. SPEED

Symbol	Parameter	Temperature Range	–10	–12	–15	–20	–25	–35	Unit
I_{CC}	Dynamic Operating Current*	Commercial	180	170	160	155	150	140	mA
		Military	N/A	N/A	170	160	155	150	mA

*V_{CC} = 5.5V. Tested with outputs open. f = Max. Switching inputs are 0V and 3V. $\overline{CE} = V_{IL}$, $\overline{OE} = V_{IH}$.

AC ELECTRICAL CHARACTERISTICS—READ CYCLE

(V_{CC} = 5V ± 10%, All Temperature Ranges)[2]

Sym.	Parameter	–10 Min	–10 Max	–12 Min	–12 Max	–15 Min	–15 Max	–20 Min	–20 Max	–25 Min	–25 Max	–35 Min	–35 Max	Unit
t_{RC}	Read Cycle Time	10		12		15		20		25		35		ns
t_{AA}	Address Access Time		10		12		15		20		25		35	ns
t_{AC}	Chip Enable Access Time		10		12		15		20		25		35	ns
t_{OH}	Output Hold from Address Change	2		2		2		2		2		2		ns
t_{LZ}	Chip Enable to Output in Low Z	2		2		2		2		3		3		ns
t_{HZ}	Chip Disable to Output in High Z		5		6		7		8		10		15	ns
t_{OE}	Output Enable Low to Data Valid		6		8		10		10		15		20	ns
t_{OLZ}	Output Enable Low to Low Z	0		0		0		0		0		0		ns
t_{OHZ}	Output Enable High to High Z		6		7		8		9		12		15	ns
t_{PU}	Chip Enable to Power Up Time	0		0		0		0		0		0		ns
t_{PD}	Chip Disable to Power Down		10		12		15		20		20		25	ns

TIMING WAVEFORM OF READ CYCLE NO. 1 ($\overline{OE}$ CONTROLLED)[5]

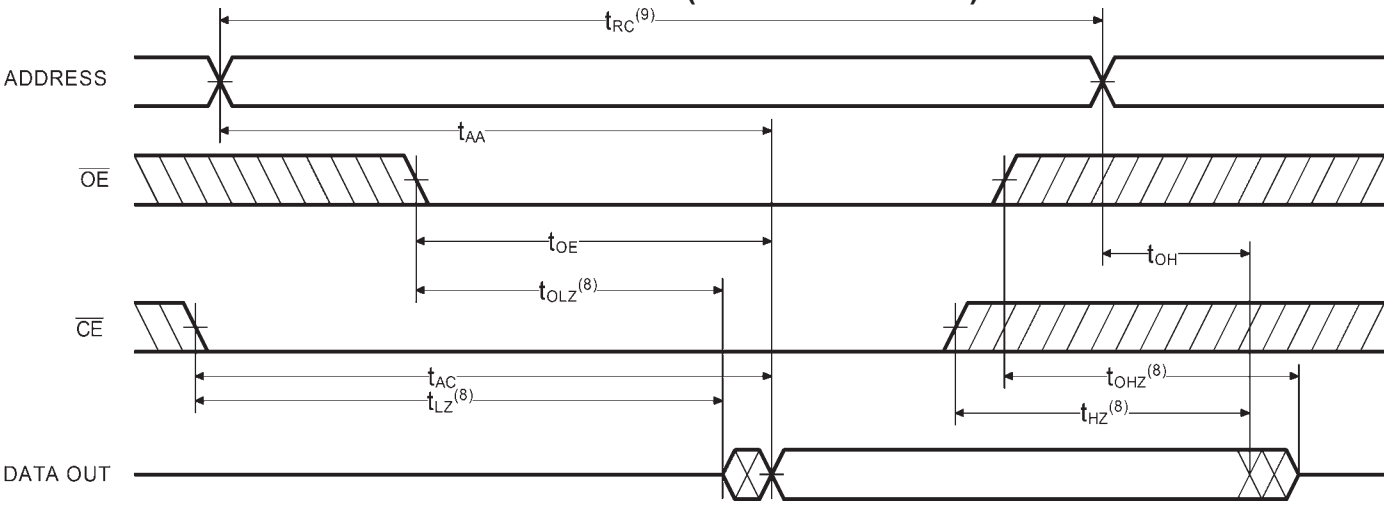

TIMING WAVEFORM OF READ CYCLE NO. 2 (ADDRESS CONTROLLED)[5,6]

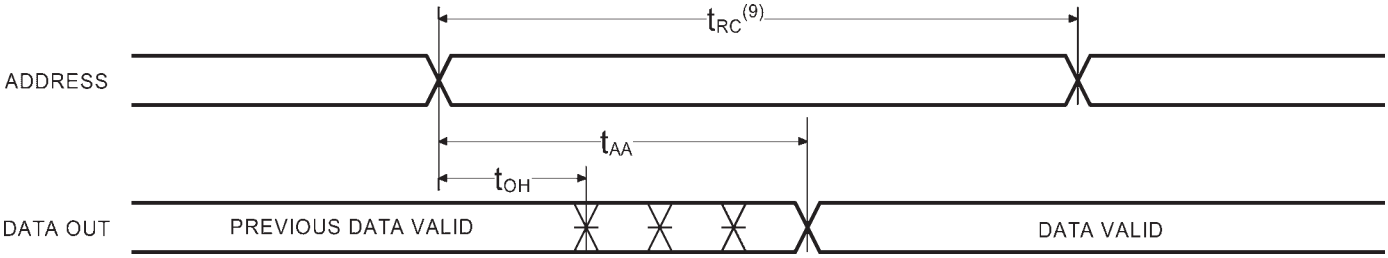

TIMING WAVEFORM OF READ CYCLE NO. 3 ($\overline{CE}$ CONTROLLED)[5,7]

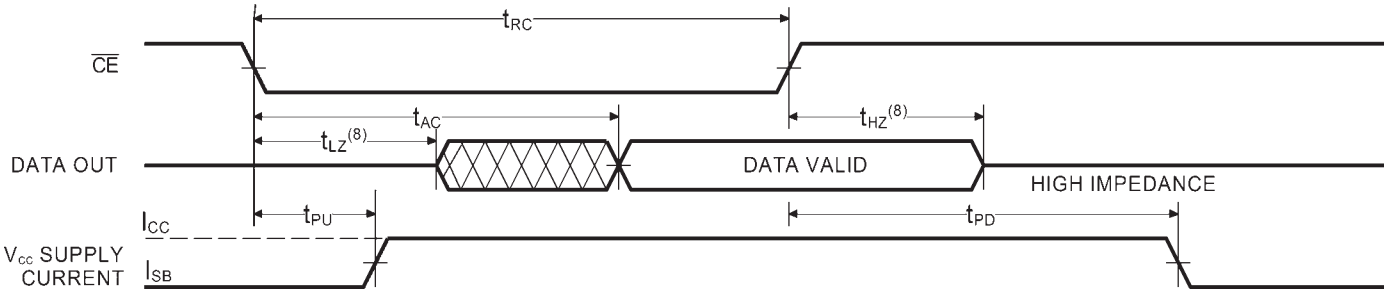

Notes:

1. Stresses greater than those listed under MAXIMUM RATINGS may cause permanent damage to the device. This is a stress rating only and functional operation of the device at these or any other conditions above those indicated in the operational sections of this specification is not implied. Exposure to MAXIMUM rating conditions for extended periods may affect reliability.
2. Extended temperature operation guaranteed with 400 linear feet per minute of air flow.
3. Transient inputs with V_{IL} and I_{IL} not more negative than –3.0V and –100mA, respectively, are permissible for pulse widths up to 20 ns.
4. This parameter is sampled and not 100% tested.
5. $\overline{WE}$ is HIGH for READ cycle.
6. $\overline{CE}$ is LOW and $\overline{OE}$ is LOW for READ cycle.
7. ADDRESS must be valid prior to, or coincident with $\overline{CE}$ transition LOW.
8. Transition is measured ± 200 mV from steady state voltage prior to change, with loading as specified in Figure 1. This parameter is sampled and not 100% tested.
9. Read Cycle Time is measured from the last valid address to the first transitioning address.

AC CHARACTERISTICS—WRITE CYCLE

(V_{CC} = 5V ± 10%, All Temperature Ranges)[2]

Sym.	Parameter	–10		–12		–15		–20		–25		–35		Unit
		Min	Max	Min	Max	Min	Max	Min	Max	Min	Max	Min	Max	
t_{WC}	Write Cycle Time	10		12		15		20		25		35		ns
t_{CW}	Chip Enable Time to End of Write	8		10		12		15		18		25		ns
t_{AW}	Address Valid to End of Write	8		10		12		15		18		25		ns
t_{AS}	Address Set-up Time	0		0		0		0		0		0		ns
t_{WP}	Write Pulse Width	8		10		12		15		18		20		ns
t_{AH}	Address Hold Time	0		0		0		0		0		0		ns
t_{DW}	Data Valid to End of Write	7		8		10		12		15		20		ns
t_{DH}	Data Hold Time	0		0		0		0		0		0		ns
t_{WZ}	Write Enable to Output in High Z		6		7		8		10		15		15	ns
t_{OW}	Output Active from End of Write	0		0		0		0		0		0		ns

TIMING WAVEFORM OF WRITE CYCLE NO. 1 ($\overline{WE}$ CONTROLLED)[10,11]

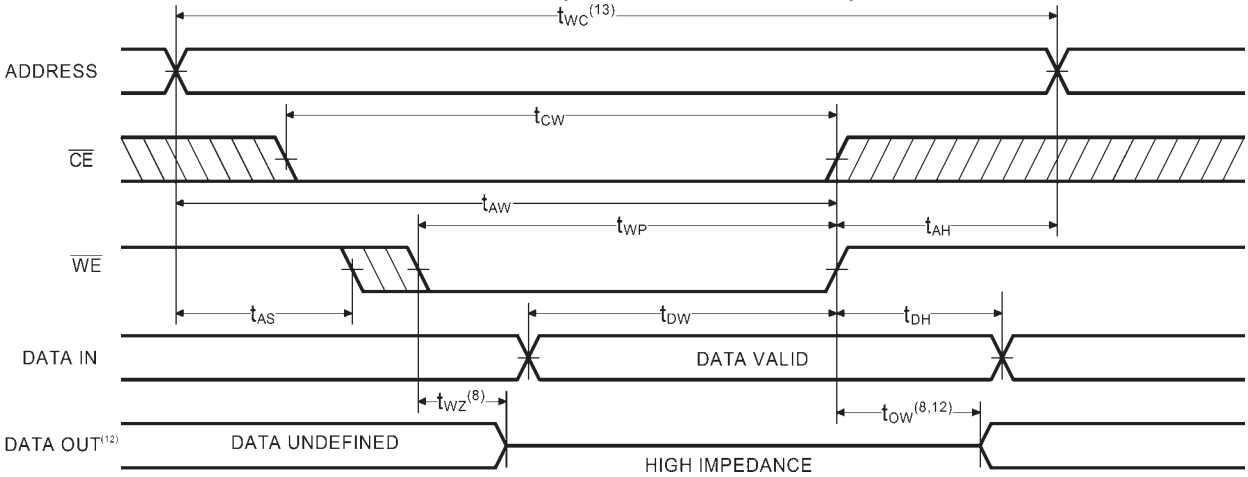

TIMING WAVEFORM OF WRITE CYCLE NO. 2 ($\overline{CE}$ CONTROLLED)[10]

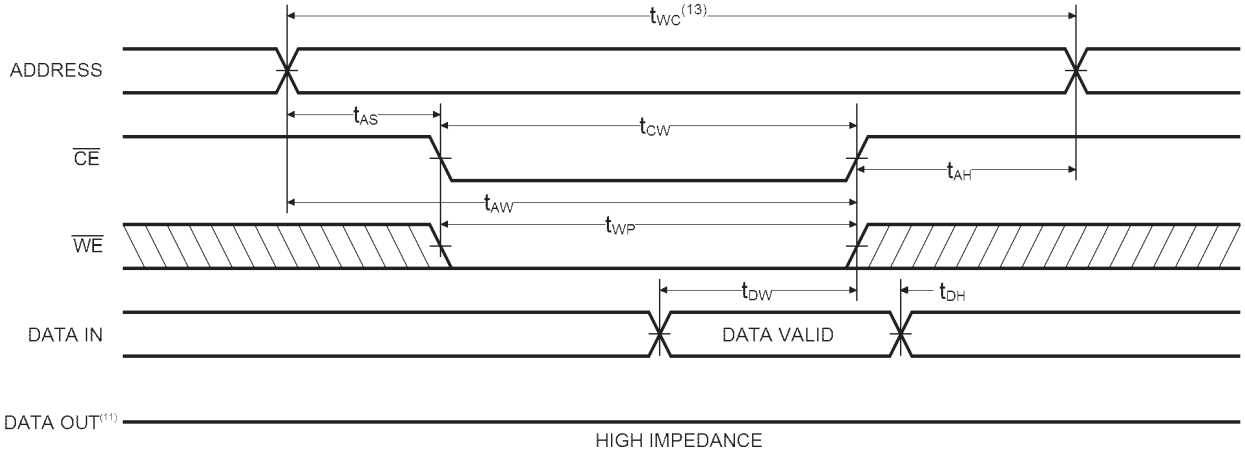

Notes:

10. $\overline{CE}$ and $\overline{WE}$ must be LOW for WRITE cycle.
11. $\overline{OE}$ is LOW for this WRITE cycle to show t_{WZ} and t_{OW}.
12. If $\overline{CE}$ goes HIGH simultaneously with $\overline{WE}$ HIGH, the output remains in a high impedance state
13. Write Cycle Time is measured from the last valid address to the first transitioning address.

AC TEST CONDITIONS

Input Pulse Levels	GND to 3.0V
Input Rise and Fall Times	3ns
Input Timing Reference Level	1.5V
Output Timing Reference Level	1.5V
Output Load	See Figures 1 and 2

TRUTH TABLE

Mode	$\overline{CE}$	$\overline{OE}$	$\overline{WE}$	I/O	Power
Standby	H	X	X	High Z	Standby
D_{OUT} Disabled	L	H	H	High Z	Active
Read	L	L	H	D_{OUT}	Active
Write	L	X	L	High Z	Active

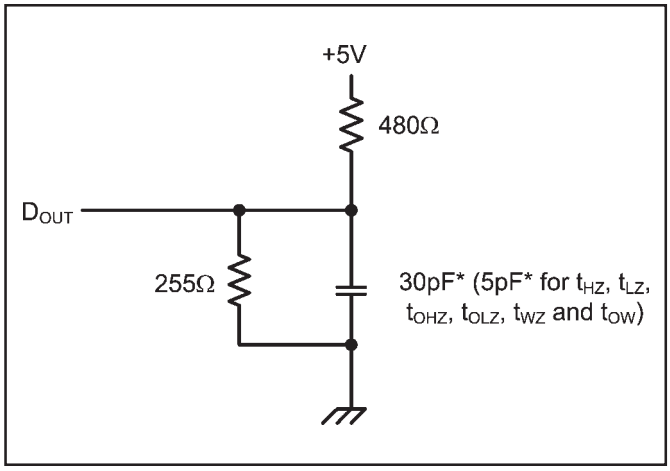

Figure 1. Output Load

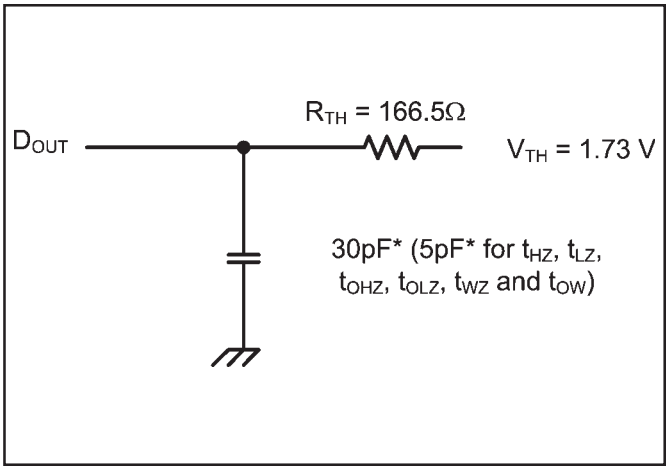

Figure 2. Thevenin Equivalent

* including scope and test fixture.

Note:
Because of the ultra-high speed of the P4C116/L, care must be taken when testing this device; an inadequate setup can cause a normal functioning part to be rejected as faulty. Long high-inductance leads that cause supply bounce must be avoided by bringing the V_{CC} and ground planes directly up to the contactor fingers. A 0.01 μF high frequency capacitor is also required between V_{CC} and ground. To avoid signal reflections, proper termination must be used; for example, a 50Ω test environment should be terminated into a 50Ω load with 1.73V (Thevenin Voltage) at the comparator input, and a 116Ω resistor must be used in series with D_{OUT} to match 166Ω (Thevenin Resistance).

LCC PIN CONFIGURATIONS

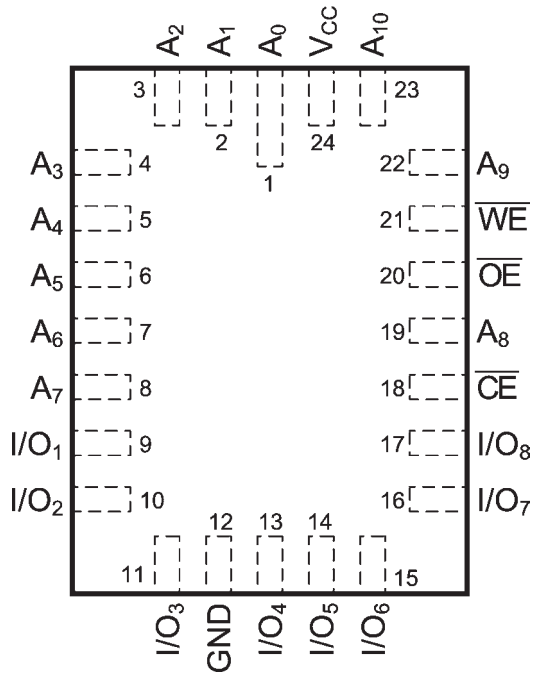

24-Pin LCC (L8)

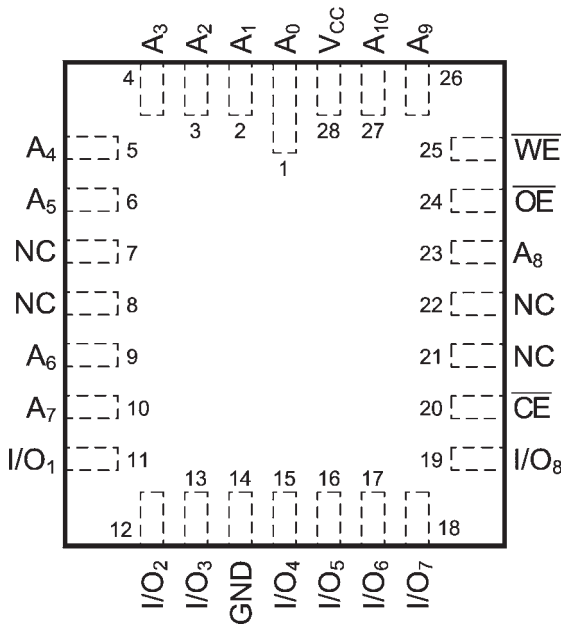

28-Pin LCC (L5-1)

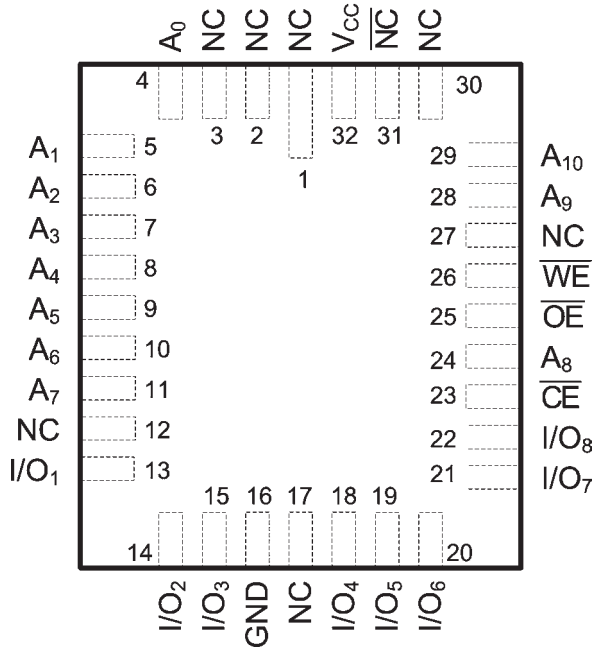

32-Pin LCC (L6)

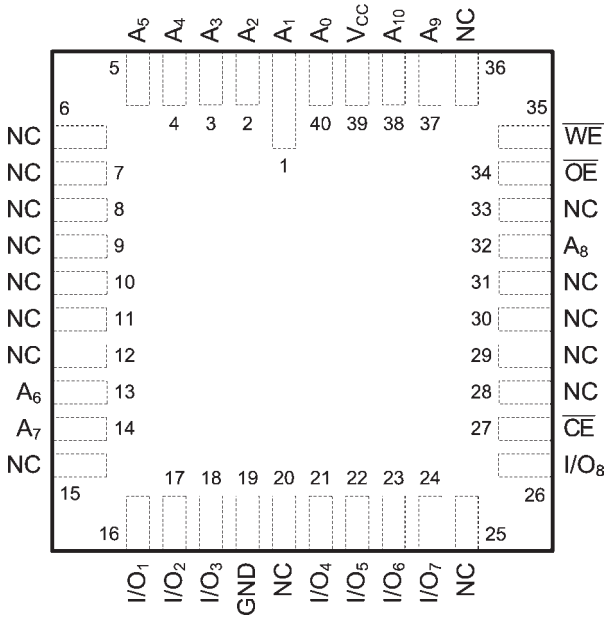

40-Pin LCC (L10)

ORDERING INFORMATION

P4C116 L — xx x x

Device Type | Low Power | Speed | Package | Processing

Processing:
- C — 0°C to +70°C
- M — -55°C to +125°C
- MB — Mil Temp. with MIL-STD-883 Class B Compliance

Package:
- C — Ceramic Side Brazed DIP, 300 mil
- FS — Solder Seal Flat Pack
- J — Plastic SOJ, 300 mil
- L — 24-Pin Rectangular LCC (300 x 400 mil)
- L28 — 28-Pin Square LCC (450 x 450 mil)
- L32 — 32-Pin Rectangular LCC (450 x 550 mil)
- L40 — 40-Pin Square LCC (480 x 480 mil)
- P — Plastic DIP, 300 mil
- S — Plastic SOIC, 300 mil

Speed: 10, 12, 15, 20, 25, 35

Low Power: Low Power Designation (L=Low Power; Blank=None) **[Military Temperature Only]**

Device Type: 2K x 8 SRAM

SELECTION GUIDE

The P4C116 is available in the following temperature, speed and package options.

Temperature Range	Package	Speed (ns)					
		10	12	15	20	25	35
Commercial	Plastic DIP	-10PC	-12PC	-15PC	-20PC	-25PC	-35PC
	Plastic SOJ	-10JC	-12JC	-15JC	-20JC	-25JC	-35JC
	Plastic SOIC	-10SC	-12SC	-15SC	-20SC	-25SC	-35SC
Military Temperature	24-Pin Rect. LCC	N/A	N/A	-15LM	-20LM	-25LM	-35LM
	28-Pin Sq. LCC	N/A	N/A	-15L28M	-20L28M	-25L28M	-35L28M
	32-Pin Rect. LCC	N/A	N/A	-15L32M	-20L32M	-25L32M	-35L32M
	40-Pin Sq. LCC	N/A	N/A	-15L40M	-20L40M	-25L40M	-35L40M
	Side Brazed DIP	N/A	N/A	-15CM	-20CM	-25CM	-35CM
	CERPACK	N/A	N/A	-15FSM	-20FSM	-25FSM	-35FSM
Military Processed*	24-Pin Rect. LCC	N/A	N/A	-15LMB	-20LMB	-25LMB	-35LMB
	28-Pin Sq. LCC	N/A	N/A	-15L28MB	-20L28MB	-25L28MB	-35L28MB
	32-Pin Rect. LCC	N/A	N/A	-15L32MB	-20L32MB	-25L32MB	-35L32MB
	40-Pin Sq. LCC	N/A	N/A	-15L40MB	-20L40MB	-25L40MB	-35L40MB
	Side Brazed DIP	N/A	N/A	-15CMB	-20CMB	-25CMB	-35CMB
	CERPACK	N/A	N/A	-15FSMB	-20FSMB	-25FSMB	-35FSMB

* Military temperature range with MIL-STD-883, Class B processing.
N/A = Not Available

Pkg #	C4	
# Pins	24 (300 mil)	
Symbol	**Min**	**Max**
A	-	0.200
b	0.014	0.026
b2	0.045	0.065
C	0.008	0.018
D	-	1.280
E	0.220	0.310
eA	0.300 BSC	
e	0.100 BSC	
L	0.125	0.200
Q	0.015	0.060
S1	0.005	-
S2	0.005	-

SIDE BRAZED DUAL IN-LINE PACKAGE

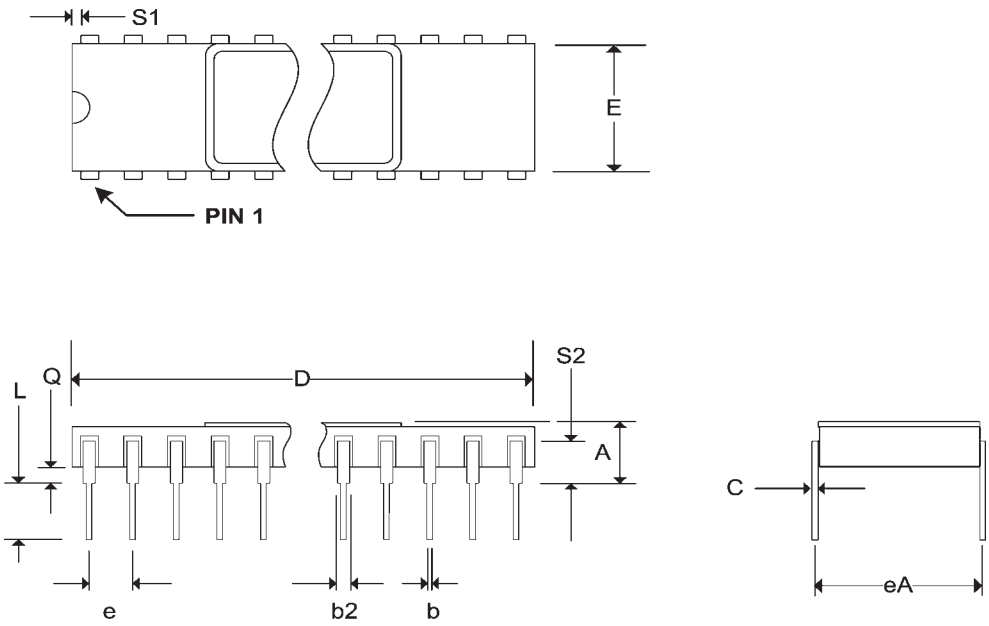

Pkg #	FS-1	
# Pins	24	
Symbol	**Min**	**Max**
A	0.045	0.115
b	0.015	0.022
b1	0.015	0.019
c	0.004	0.009
c1	0.004	0.006
D	-	0.640
E	0.350	0.420
E1	-	0.450
E2	0.180	-
E3	0.030	-
e	0.050 BSC	
k	0.008	0.015
L	0.250	0.370
Q	0.026	0.045
S1	0.000	-
M	-	0.0015
N	24	

SOLDER SEAL FLATPACK

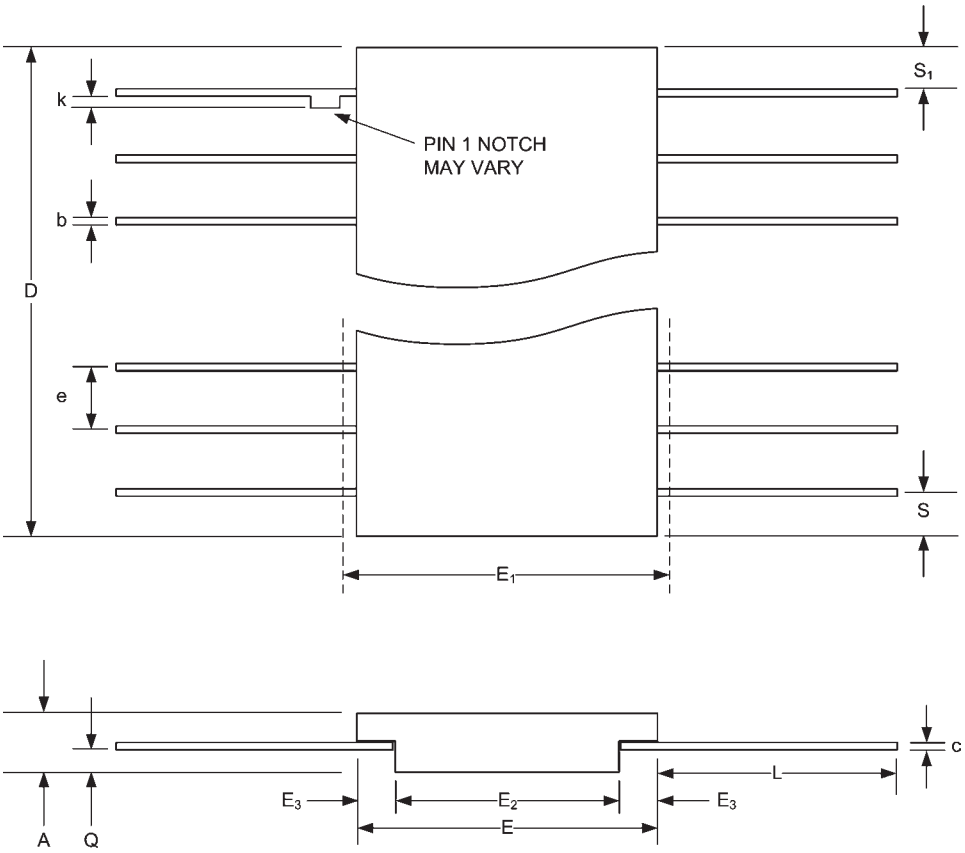

Pkg #	J4	
# Pins	24 (300 mil)	
Symbol	**Min**	**Max**
A	0.128	0.148
A1	0.082	-
b	0.016	0.020
C	0.007	0.010
D	0.620	0.630
e	0.050 BSC	
E	0.335 BSC	
E1	0.292	0.300
E2	0.267 BSC	
Q	0.025	-

SOJ SMALL OUTLINE IC PACKAGE

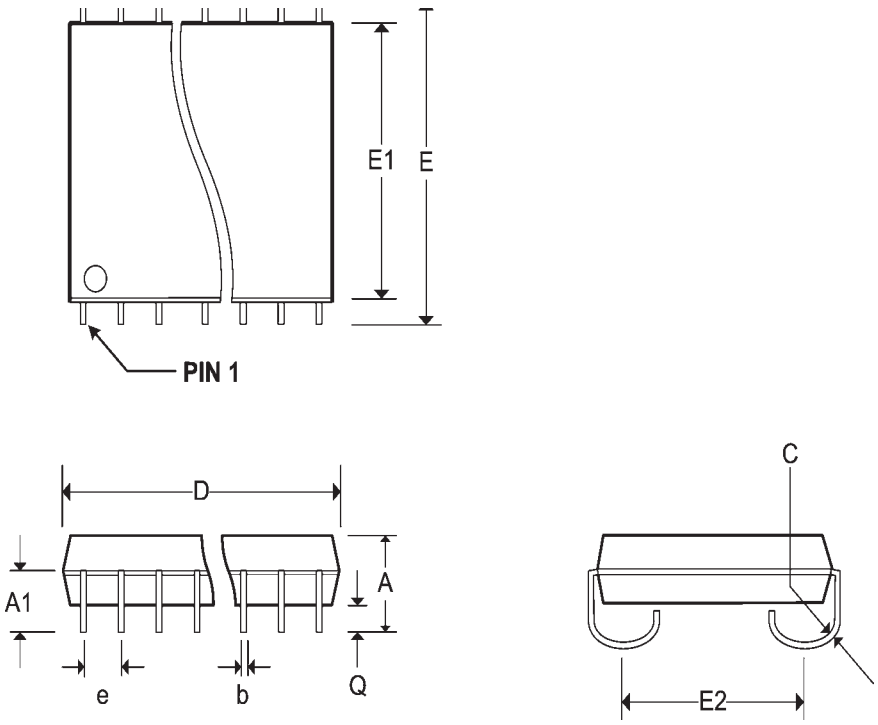

Pkg #	L5-1	
# Pins	28	
Symbol	**Min**	**Max**
A	0.060	0.075
A1	0.050	0.065
B1	0.022	0.028
D/E	0.442	0.460
D1/E1	0.300 BSC	
D2/E2	0.150 BSC	
D3/E3	-	0.460
e	0.050 BSC	
h	0.040 REF	
j	0.020 REF	
L	0.045	0.055
L1	0.045	0.055
L2	0.075	0.095
ND	7	
NE	7	

SQUARE LEADLESS CHIP CARRIER

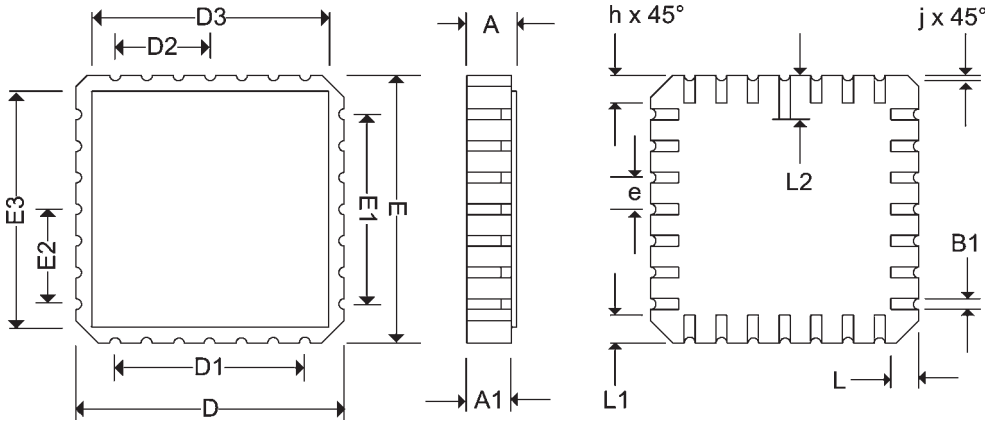

Pkg #	L6	
# Pins	32	
Symbol	**Min**	**Max**
A	0.060	0.075
A1	0.050	0.065
B1	0.022	0.028
D	0.442	0.458
D1	0.300 BSC	
D2	0.150 BSC	
D3	-	0.458
E	0.540	0.560
E1	0.400 BSC	
E2	0.200 BSC	
E3	-	0.558
e	0.050 BSC	
h	0.040 REF	
j	0.020 REF	
L	0.045	0.055
L1	0.045	0.055
L2	0.075	0.095
ND	7	
NE	9	

RECTANGULAR LEADLESS CHIP CARRIER

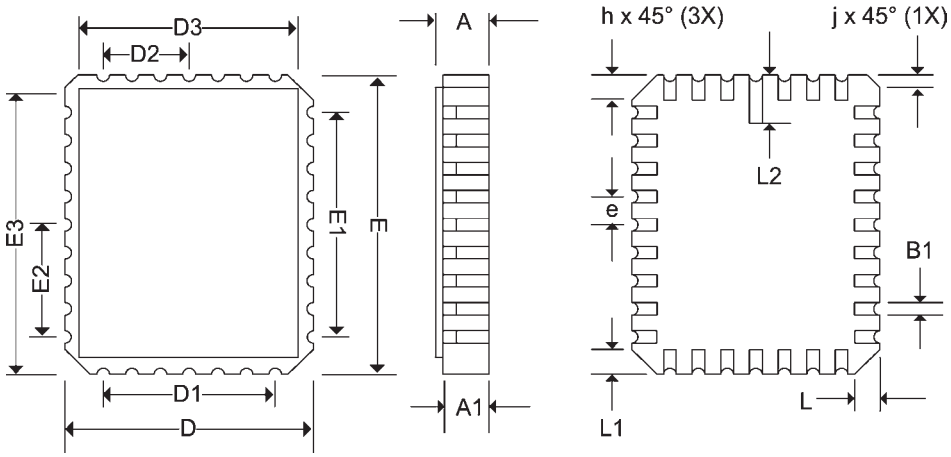

Pkg #	L8	
# Pins	24	
Symbol	**Min**	**Max**
A	0.064	0.076
A1	0.054	0.066
B1	0.022	0.028
D	0.292	0.308
D1	0.200 BSC	
D2	0.100 BSC	
D3	-	0.308
E	0.392	0.408
E1	0.300 BSC	
E2	0.150 BSC	
E3	-	0.408
e	0.050 BSC	
h	0.025 REF	
j	0.015 REF	
L	0.040	0.050
L1	0.040	0.050
L2	0.077	0.093
ND	5	
NE	7	

RECTANGULAR LEADLESS CHIP CARRIER

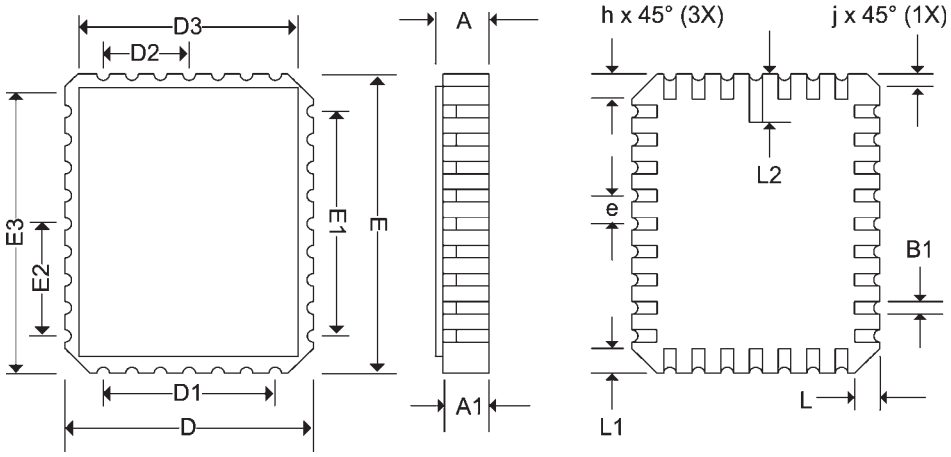

Pkg #	L10	
# Pins	40	
Symbol	**Min**	**Max**
A	0.060	0.080
A1	0.050	0.075
B1	0.015	0.025
D/E	0.475	0.492
D1/E1	0.360 BSC	
D2/E2	0.180 BSC	
D3/E3	-	0.492
e	0.040 BSC	
h	R = .0075	
j	0.026 REF	
L	0.030	0.050
L1	0.030	0.050
L2	0.080	0.090
ND/NE	10	

SQUARE LEADLESS CHIP CARRIER

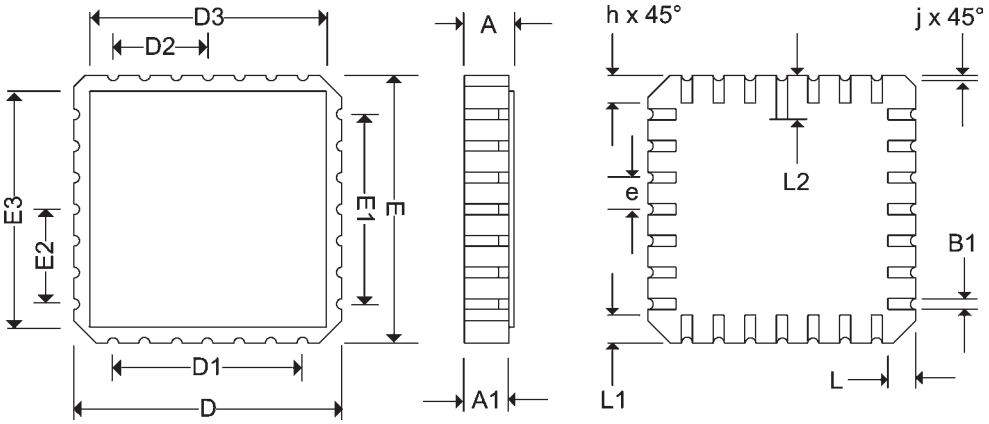

Pkg #	P4	
# Pins	24 (300 Mil)	
Symbol	**Min**	**Max**
A	-	0.210
A1	0.015	-
b	0.014	0.022
b2	0.045	0.070
C	0.008	0.014
D	1.230	1.280
E1	0.240	0.280
E	0.300	0.325
e	0.100 BSC	
eB	-	0.430
L	0.115	0.150
α	0°	15°

PLASTIC DUAL IN-LINE PACKAGE

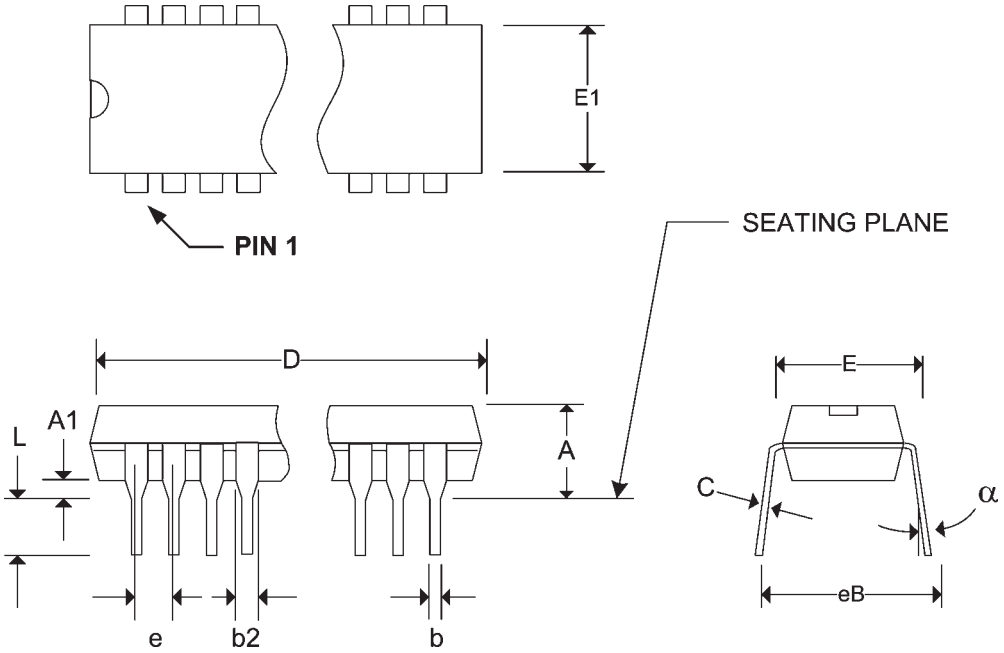

Pkg #	S4	
# Pins	24 (300 Mil)	
Symbol	**Min**	**Max**
A	0.093	0.104
A1	0.004	0.012
b2	0.013	0.020
C	0.009	0.012
D	0.598	0.614
e	0.050 BSC	
E	0.291	0.299
H	0.394	0.419
h	0.010	0.029
L	0.016	0.050
α	0°	8°

SOIC/SOP SMALL OUTLINE IC PACKAGE

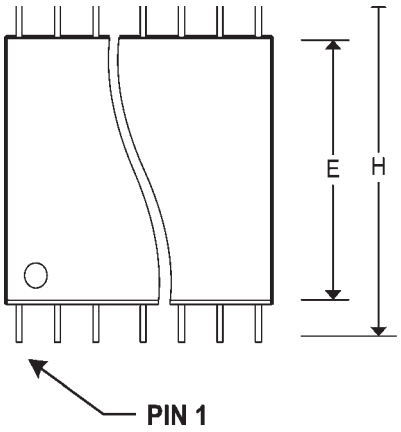

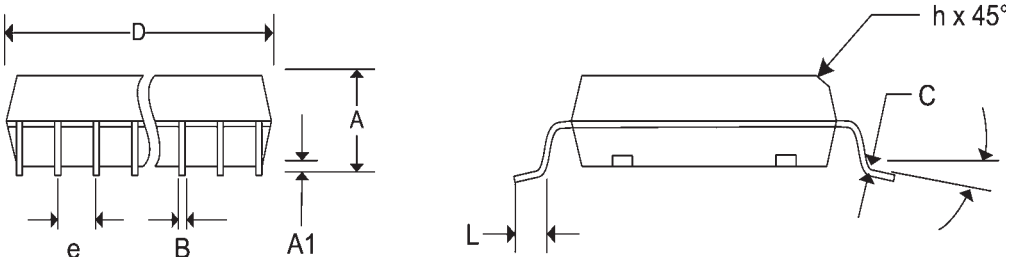

REVISIONS

DOCUMENT NUMBER: SRAM110
DOCUMENT TITLE: P4C116 / P4C116L ULTRA HIGH SPEED 2K x 8 STATIC CMOS RAMS

REV.	ISSUE DATE	ORIG. OF CHANGE	DESCRIPTION OF CHANGE
OR	1997	DAB	New Data Sheet
A	Oct-05	JDB	Change logo to Pyramid

Мы молодая и активно развивающаяся компания в области поставок электронных компонентов. Мы поставляем электронные компоненты отечественного и импортного производства напрямую от производителей и с крупнейших складов мира.

Благодаря сотрудничеству с мировыми поставщиками мы осуществляем комплексные и плановые поставки широчайшего спектра электронных компонентов.

Собственная эффективная логистика и склад в обеспечивает надежную поставку продукции в точно указанные сроки по всей России.

Мы осуществляем техническую поддержку нашим клиентам и предпродажную проверку качества продукции. На все поставляемые продукты мы предоставляем гарантию .

Осуществляем поставки продукции под контролем ВП МО РФ на предприятия военно-промышленного комплекса России , а также работаем в рамках 275 ФЗ с открытием отдельных счетов в уполномоченном банке. Система менеджмента качества компании соответствует требованиям ГОСТ ISO 9001.

Минимальные сроки поставки, гибкие цены, неограниченный ассортимент и индивидуальный подход к клиентам являются основой для выстраивания долгосрочного и эффективного сотрудничества с предприятиями радиоэлектронной промышленности, предприятиями ВПК и научно-исследовательскими институтами России.

С нами вы становитесь еще успешнее!

Наши контакты:

Телефон: +7 812 627 14 35

Электронная почта: sales@st-electron.ru

Адрес: 198099, Санкт-Петербург, Промышленная ул, дом № 19, литера Н, помещение 100-Н Офис 331