# Series 04

**22.5mm 30.5mm IP65 10A 600VAC**

INDICATOR | PUSHBUTTON | E-STOP | MUSHROOM | KEYLOCK | SELECTOR | BUZZER

**Choose one component from each of the colored sections to assemble a complete switch.**

## Product Profile

**The Series 04 is a high quality switch range that includes pushbuttons, indicators, selectors, mushroom headed switches, key switches, and Emergency-stops.**

**Options include self cleaning, slow-make and snap-action switching elements.**

**Technical drawings see pages 18-21**

- IP65 Protection
- Switch Rating:
  Maximum Voltage, 600VAC
  Maximum Thermal Current, $I_{th}$ = 10A
  230VAC/6A, 24VDC/10A
- Raised Mounting into 22.5mm cut out
- Flush Mounting into 30.5mm cut out
- Illumination using Ba9s (T-3¼ bayonet base) Lamps or LED's
- All standard lenses are transparent with translucent diffuser
- Screw terminal or plug-in connections

## Indicator

Indicator, round, full face, 22.5mm mounting

| Color | Part No. |
|---|---|
| Red | 704.000.2 |
| Yellow | 704.000.4 |
| Green | 704.000.5 |
| Blue | 704.000.6 |
| Clear | 704.000.7 |

**For complete switch also order**

Indicator, flush mount, aluminum bezel, 30.5mm mounting

| Color | Part No. |
|---|---|
| Red | 704.006.218 |
| Yellow | 704.006.418 |
| Green | 704.006.518 |
| Blue | 704.006.618 |
| Clear | 704.006.718 |

**For complete switch also order**

## Non-illuminated pushbutton

Non illuminated raised pushbutton, gray plastic bezel, 22.5mm mounting

Non illuminated raised pushbutton, aluminum bezel, 22.5mm mounting

Non illuminated flush mount pushbutton, aluminum bezel, 30.5mm mounting

**Part Ordering System 704.02 - ( ) ( ) ( ) ( )**

| Pushbutton Action | Lens/Cap Style |
|---|---|
| 1-Momentary | Standard-plastic |
| 2-Momentary | Standard-metal |
| 3-Momentary | Extended-plastic |
| 4-Momentary | Mushroom-plastic |
| 5-Maintained | Standard-plastic |
| 6-Maintained | Standard-metal |
| 7-Maintained | Extended-plastic |
| 8-Maintained | Mushroom-plastic |

| Front Ring Style | Front Ring Material |
|---|---|
| 0-Standard | Black plastic |
| 1-Standard | Anodized Al |
| 2-Sealed | Ni plated brass |
| | Silicone cover |
| 3-Sealed | Anodized Al |
| | Silicon cover |
| 4-Standard | Chrome plastic |
| 6-Standard | Gray plastic |
| 7-Extended | Gray plastic |
| 9-Standard | Steel |

| Diffuser Type |
|---|
| 0-Black |
| 1-No diffuser (Mushroom or opaque lens) |
| 7-Clear |
| 9-White |

| Lens/Cap Color |
|---|
| 0-Black |
| 2-Red |
| 3-Orange* |
| 4-Yellow |
| 5-Green |
| 6-Blue** |
| 7-White *** |
| 8-Aluminum** |
| 9-Steel** |

**For complete switch also order A**

* Only available in standard plastic

** Not available with mushroom cap

*** Combination of clear lens and white diffuser

| Color | Part No., Momentary | Part No., Maintained |
|---|---|---|
| Red | 704.012.218 | 704.042.218 |
| Yellow | 704.012.418 | 704.042.418 |
| Green | 704.012.518 | 704.042.518 |
| Blue | 704.012.618 | 704.042.618 |
| Clear | 704.012.718 | 704.042.718 |
| Black | 704.012.018 | 704.042.218 |

**For complete switch also order A**

**Choose one component from each of the colored sections to assemble a complete switch.**
For other options or further information please contact EAO Switch directly.

BLOCK | LED | A ACCESSORIES

## Illuminated pushbutton

Illuminated raised pushbutton, gray plastic bezel, 22.5mm mounting

Illuminated raised pushbutton, aluminum bezel, 22.5mm mounting

Illuminated flush mount pushbutton, aluminum bezel, 30.5mm mounting

**Part Ordering System 704.01 - ( ) ( ) ( ) ( )**

| Pushbutton Action | Lens Style | Termination Style |
|---|---|---|
| 1-Momentary | Standard | Screw |
| 2-Momentary | Standard | 0.250" Q.C. |
| 3-Momentary | Extended | Screw |
| 4-Momentary | Extended | 0.250" Q.C. |
| 5-Maintained | Standard | Screw |
| 6-Maintained | Standard | 0.250" Q.C. |
| 7-Maintained | Extended | Screw |
| 8-Maintained | Extended | 0.250" Q.C. |
| 9-Momentary | Mushroom | Screw |
| 10-Momentary | Mushroom | 0.250" Q.C. |
| 11-Maintained | Mushroom | Screw |
| 12-Maintained | Mushroom | 0.250" Q.C. |

| Front Ring Material | |
|---|---|
| 0-Standard | Black plastic |
| 1-Standard | Anodized Al |
| 2-Sealed | Ni plated brass |
| | Silicon cover |
| 3-Sealed | Anodized Al |
| | Silicon cover |
| 4-Standard | Chrome plastic |
| 6-Standard | Gray plastic |
| 7-Extended | Gray plastic |
| 9-Standard | Steel |

| Diffuser* Type |
|---|
| 7-Clear |
| 9-White |

| Lens Color |
|---|
| 2-Transparent red |
| 3-Transparent orange |
| 4-Transparent yellow |
| 5-Transparent green |
| 6-Transparent blue |
| 7-White (uses clear lens/white diffuser) |

| Color | Part No., Momentary | Part No., Maintained |
|---|---|---|
| Red | 704.032.218 | 704.062.218 |
| Yellow | 704.032.418 | 704.062.418 |
| Green | 704.032.518 | 704.062.518 |
| Blue | 704.032.618 | 704.062.618 |
| Clear | 704.032.718 | 704.062.718 |

**For complete switch also order** A

*White translucent for incandescent lamps and clear knurled for neon

**For complete switch also order** A

## Illuminated pushbutton

Illuminated raised pushbutton, gray plastic bezel, 22.5mm mounting

Illuminated raised pushbutton, aluminum bezel, 22.5mm mounting

**Part Ordering System 704.03 - ( ) ( ) ( ) ( )**

| Pushbutton Action | Lighted or Unlighted | Film Insert |
|---|---|---|
| 0-Momentary | Lighted | With |
| 1-Momentary | Lighted | Without |
| 2-Momentary | Unlighted | With |
| 3-Momentary | Unlighted | Without |
| 4-Maintained | Lighted | With |
| 5-Maintained | Lighted | Without |
| 6-Maintained | Unlighted | With |
| 7-Maintained | Unlighted | Without |

| Lamp Holder |
|---|
| 0-No lamp holder |
| 1-Lamp holder screw terminals |
| 2-Lamp holder 0.250" Q.C. terminals |

| Bezel Color |
|---|
| 0-Black |
| 4-Chrome |
| 6-Light gray |

| Lens Color |
|---|
| 0-Black |
| 2-Red |
| 3-Orange |
| 4-Yellow |
| 5-Green |
| 6-Blue |
| 7-White* |

**For complete switch also order** A

*Combination of clear lens and white diffuser

**Choose one component from each of the colored sections to assemble a complete switch.**

## Emergency-stop switch

Emergency-stop, twist release, 37mm diameter, foolproof to EN 60947-5-1 and EN 418, use slow-make switching elements

| Part No. |
|---|
| 704.064.2 |

For emergency stop applications, a maximum of 2 switching elements can be used

**For complete switch also order A**

Emergency-stop, key release, 37mm diameter, foolproof to EN 60947-5-1 and EN 418, use slow-make switching elements

| Part No. |
|---|
| 704.066.2 |

For emergency stop applications, a maximum of 2 switching elements can be used

**For complete switch also order A**

Emergency-stop, twist release, mushroom head, 40mm diameter, use slow-make switching elements

| Part No. | Front Ring | Markings |
|---|---|---|
| 704.074.2 | Gray plastic | Directional arrows |
| 704.075.2 | Anodized aluminum | Directional arrows |

## Mushroom headed pushbutton

Mushroom headed pushbutton, plastic bezel and aluminum bezel, 22.5mm mounting, function momentary

| Color | Part No., Plastic | Part No., Aluminum |
|---|---|---|
| Red | 704.070.2 | 704.071.2 |
| Yellow | 704.070.4 | 704.071.4 |
| Green | 704.070.5 | 704.071.5 |
| Black | 704.070.0 | 704.071.0 |

Maintained versions available as well

**For complete switch also order A**

## Keylock switch

Keylock switch 2 position, raised, 22.5mm mounting

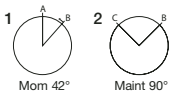


| Drawing | Part No. | Action | Key rem. |
|---|---|---|---|
| 1 | 704.123.0 | Momentary | A |
| 2 | 704.121.0 | Maintained | C |

**For complete switch also order A**

Keylock switch 2 position, flush mount, 30.5mm mounting

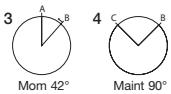


| Drawing | Part No. | Action | Key rem. |
|---|---|---|---|
| 3 | 704.123.018 | Momentary | A |
| 4 | 704.121.018 | Maintained | C |

**For complete switch also order A**

**Choose one component from each of the colored sections to assemble a complete switch.**
For other options or further information please contact EAO Switch directly.

BLOCK | LED | A ACCESSORIES

## Keylock switch

Keylock switch 3 position, raised, 22.5mm mounting

5

Mom 42°

6

Maint 90°

| Drawing | Part No. | Action | Key rem. |
|---|---|---|---|
| 5 | 704.115.0 | Momentary/Momentary | A |
| 6 | 704.114.0 | Maintained/Maintained | A |

**For complete switch also order A**

Keylock switch 3 position, flush mount, 30.5mm mounting

7

Maint/Mom 42°

| Drawing | Part No. | Action | Key rem. |
|---|---|---|---|
| 7 | 704.115.018 | Momentary/Momentary | A |
| 7 | 704.114.018 | Maintained/Maintained | A |

**For complete switch also order A**

## Selector switch

Selector switch short lever 2 position, raised, 22.5mm mounting

8

Mom 42°

9

Maint 90°

| Drawing | Part No. | Action | Bezel |
|---|---|---|---|
| 8 | 704.412.0 | Momentary | Gray plastic |
| 8 | 704.413.0 | Momentary | Aluminum |
| 9 | 704.410.0 | Maintained | Gray plastic |
| 9 | 704.411.0 | Maintained | Aluminum |

**For complete switch also order A**

## Selector switch

Selector switch short lever 2 position, flush mount, 30.5mm mounting

10

Mom 42°

11

Maint 90°

| Drawing | Part No. | Action | Bezel |
|---|---|---|---|
| 10 | 704.413.018 | Momentary | Aluminum |
| 11 | 704.411.018 | Maintained | Aluminum |

**For complete switch also order A**

Selector switch short lever 3 position, raised, 22.5mm mounting

12

Maint/Mom 42°

| Drawing | Part No. | Action | Bezel |
|---|---|---|---|
| 12 | 704.404.0 | Momentary/Momentary | Gray plastic |
| 12 | 704.405.0 | Momentary/Momentary | Aluminum |
| 12 | 704.402.0 | Maintained/Maintained | Gray plastic |
| 12 | 704.403.0 | Maintained/Maintained | Aluminum |

**For complete switch also order A**

Selector switch short lever 3 position, flush mount, 30.5mm mounting

13

Maint/Mom 42°

| Drawing | Part No. | Action | Bezel |
|---|---|---|---|
| 13 | 704.405.018 | Momentary | Aluminum |
| 13 | 704.403.018 | Maintained | Aluminum |

**For complete switch also order A**

INDICATOR | PUSHBUTTON | E-STOP | MUSHROOM | KEYLOCK | SELECTOR | BUZZER

**Choose one component from each of the colored sections to assemble a complete switch.**

## Selector switch

Selector switch long lever 2 position, raised, 22.5mm mounting

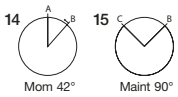


| Drawing | Part No. | Action | Bezel |
|---|---|---|---|
| 14 | 704.102.0 | Momentary | Gray plastic |
| 14 | 704.103.0 | Momentary | Aluminum |
| 15 | 704.100.0 | Maintained | Gray plastic |
| 15 | 704.101.0 | Maintained | Aluminum |

**For complete switch also order A**

Selector switch long lever 2 position, flush mount, 30.5mm mounting

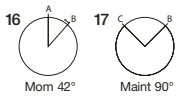


| Drawing | Part No. | Action | Bezel |
|---|---|---|---|
| 16 | 704.103.018 | Momentary | Aluminum |
| 17 | 704.101.018 | Maintained | Aluminum |

**For complete switch also order A**

Selector switch long lever 3 position, raised, 22.5mm mounting

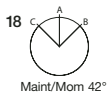


| Drawing | Part No. | Action | Bezel |
|---|---|---|---|
| 18 | 704.094.0 | Momentary | Gray plastic |
| 18 | 704.095.0 | Momentary | Aluminum |
| 18 | 704.092.0 | Maintained | Gray plastic |
| 18 | 704.093.0 | Maintained | Aluminum |

**For complete switch also order A**

## Selector switch

Selector switch long lever 3 position, flush mount, 30.5mm mounting

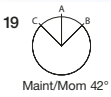


| Drawing | Part No. | Action | Bezel |
|---|---|---|---|
| 19 | 704.095.018 | Momentary | Aluminum |
| 19 | 704.093.018 | Maintained | Aluminum |

**For complete switch also order A**

## Buzzer

Buzzer, plastic bezel, raised, 22.5mm mounting, 24VDC, 95dB ± 8 at a distance of 0.1m

| Part No. | Front finish |
|---|---|
| 14-810.002 | Black plastic |
| 14-810.902 | Chromium-plated |

Buzzer, plastic bezel, flush mount, 30.5mm mounting, 24VDC, IP40, 95dB ± 8 at a distance of 0.1m

| Part No. | Front finish |
|---|---|
| 14-810.910 | Black plastic |
| 14-810.918 | Chromium-plated |

**Choose one component from each of the colored sections to assemble a complete switch.**
For other options or further information please contact EAO Switch directly.

BLOCK | LED | A ACCESSORIES

## Contact block

Contact block, screw terminal, snap-action with silver self-cleaning contacts

| Part No. | Contact type |
|---|---|
| 704.900.1 | 1NO |
| 704.900.2 | 1NC |
| 704.900.3 | 2NO |
| 704.900.4 | 2NC |
| 704.900.5 | 1NO/1NC |
| Not recommended for | |
| Emergency-stop applications | |

**For complete switch also order**

Contact block, screw terminal, slow-make (positive-break) with silver forced opening contacts

| Part No. | Contact type |
|---|---|
| 704.910.2 | 1NC |
| 704.910.4 | 2NC |
| 704.910.5 | 1NO/1NC |
| 704.910.1 | 1NO |
| 704.910.2 | 2NO |

**For complete switch also order**

## LED

LED, Ba9s (T-3¼ bayonet base), single chip, 6 Volt and 12 Volt

| Color | Part No. | Voltage |
|---|---|---|
| Red | 10-2506.1082 | 6VDC, 17mA |
| Yellow | 10-2506.1084 | 6VDC, 17mA |
| Green | 10-2506.1085 | 6VDC, 17mA |
| Blue | 10-2506.1086 | 6VDC, 17mA |
| White | 10-2506.1089 | 6VDC, 17mA |
| Red | 10-2509.1142 | 12VAC/DC, 16mA |
| Yellow | 10-2509.1144 | 12VAC/DC, 16mA |
| Green | 10-2509.1145 | 12VAC/DC, 7mA |
| Blue | 10-2509.1146 | 12VAC/DC, 16mA |
| White | 10-2509.1149 | 12VAC/DC, 16mA |

## LED

LED, Ba9s, single chip, (T-3¼ bayonet base) 24 Volt and 28 Volt

| Color | Part No. | Voltage |
|---|---|---|
| Red | 10-2512.1142 | 24VAC/DC, 15mA |
| Yellow | 10-2512.1144 | 24VAC/DC, 15mA |
| Green | 10-2512.1145 | 24VAC/DC, 7mA |
| Blue | 10-2512.1146 | 24VAC/DC, 15mA |
| White | 10-2512.1149 | 24VAC/DC, 15mA |
| Red | 10-2513.1142 | 28VAC/DC, 13mA |
| Yellow | 10-2513.1144 | 28VAC/DC, 13mA |
| Green | 10-2513.1145 | 28VAC/DC, 7mA |
| Blue | 10-2513.1146 | 28VAC/DC, 13mA |
| White | 10-2513.1149 | 28VAC/DC, 13mA |

LED, Ba9s, (T-3¼ bayonet base) single chip, 48 Volt

| Color | Part No. | Voltage |
|---|---|---|
| Red | 10-2519.1052 | 48VAC/DC, 8mA |
| Yellow | 10-2519.1054 | 48VAC/DC, 8mA |
| Green | 10-2519.1055 | 48VAC/DC, 4mA |
| Blue | 10-2519.1056 | 48VAC/DC, 8mA |
| White | 10-2519.1059 | 48VAC/DC, 8mA |

LED, Ba9s, (T-3¼ bayonet base) single chip, 130 Volt and 230 Volt

| Color | Part No. | Voltage |
|---|---|---|
| Red | 10-2H24.2052 | 130VAC / 5mA |
| Yellow | 10-2H24.2054 | 130VAC / 5mA |
| Green | 10-2H24.2055 | 130VAC / 3mA |
| Blue | 10-2H24.2056 | 130VAC / 5mA |
| White | 10-2H24.2059 | 130VAC / 5mA |
| Red | 10-2H25.2042 | 230VAC / 3mA |
| Yellow | 10-2H25.2044 | 230VAC / 3mA |
| Green | 10-2H25.2045 | 230VAC / 2mA |
| Blue | 10-2H25.2046 | 230VAC / 3mA |
| White | 10-2H25.2049 | 230VAC / 3mA |

**Choose one component from each of the colored sections to assemble a complete switch.**

## A Accessories

Lens cap, round, transparent, plastic for raised and flush indicators with bezel and pushbutton actuators

| Color | Part No. |
|---|---|
| Red | 704.602.2 |
| Yellow | 704.602.4 |
| Green | 704.602.5 |
| Blue | 704.602.6 |
| Clear | 704.602.7 |

For complete lens also order diffuser 704.609.9 (see page 21)

Protective cover, raised pushbutton

| Part No. | Comment |
|---|---|
| 704.925.0 | for pushbuttons |
| 704.925.3 | for selector with short lever with “self return” |

Protective front ring with silicon membrane for raised or flush mount pushbutton, natural anodized aluminum

| Part No. | Size |
|---|---|
| 704.600.3 | 29mm Ø for raised pushbutton |
| 704.955.3 | 35mm Ø for flush mount pushbutton |

## A Accessories

Emergency-stop protective shroud, yellow painted aluminum with 22.5mm mounting hole

| Part No. |
|---|
| Contact EAO Switch directly |

Emergency-stop switch label, 60mm diameter, English, French and German with adhesive backing

| Part No. | Markings |
|---|---|
| 704.963.6 | Emergency stop |
| 704.963.5 | Not Aus |
| 704.963.7 | Arret D'urgence |
| 44-950 | Blank |

90mm versions also available

Emergency-stop switch enclosure with 22.5mm mounting hole

| Image | Part No. |
|---|---|
| 1 | 704.945.0 |
| 2 | 704.945.6 |

**Choose one component from each of the colored sections to assemble a complete switch.**
For other options or further information please contact EAO Switch directly.

BLOCK | LED | A ACCESSORIES

## A Accessories

Blanking plate

| Part No. | Mounting hole |
|---|---|
| 704.960.7 | 22.5mm Ø |
| 704.964.8 | 30.5mm Ø |

| Part No. |
|---|
| 704.955.0 |
| 704.955.1 |

Lens, LED and lamp remover

| Part No. |
|---|
| 700.006.0 |

## A Accessories

Legend plate, adhesive, natural anodized aluminum finish for raised and flush mount pushbuttons

| Image | Part No. | Mounting hole |
|---|---|---|
| 1 | 704.968.2 | 22.5mm Ø |
| 2 | 704.968.3 | 30.5mm Ø |

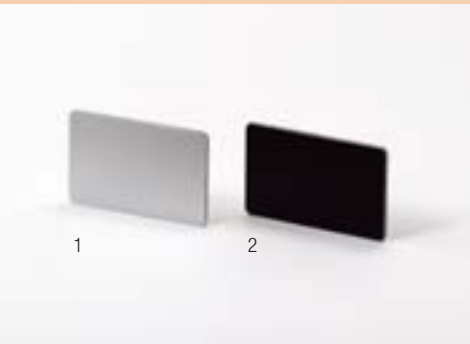


Label for front bezel set for 22.5 and 30.5mm flush mount with label support, self adhesive

| Image | Part No. |
|---|---|
| 1 | 704.968.0 |
| 2 | 704.968.1 |

## 04 Indicator

Raised

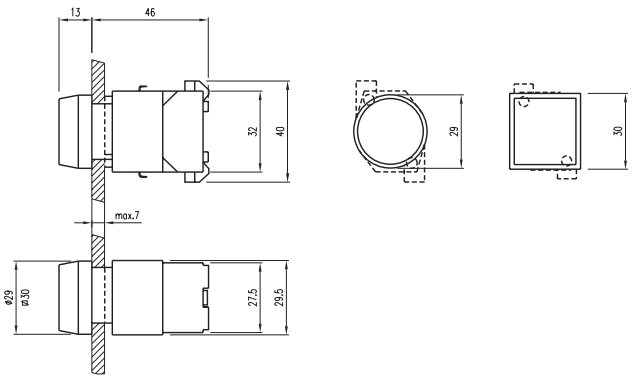


## 04 Indicator

Flush

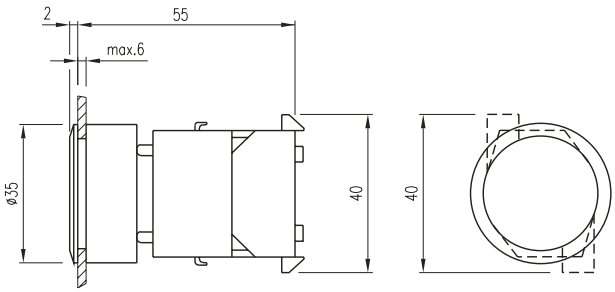


## 04 Pushbutton

Non-Illuminated, Raised

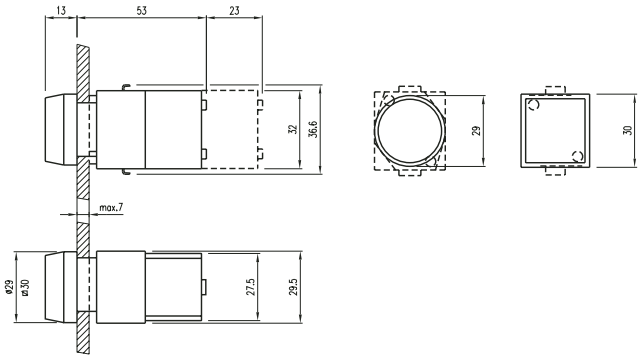


## 04 Pushbutton

Non-Illuminated, Flush

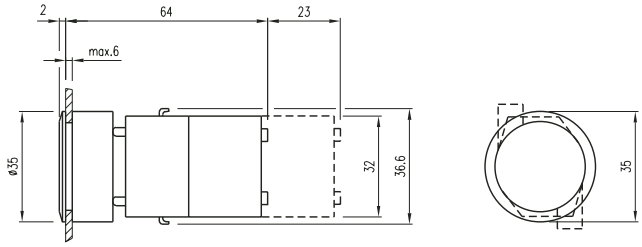


## 04 Pushbutton

Illuminated, Raised

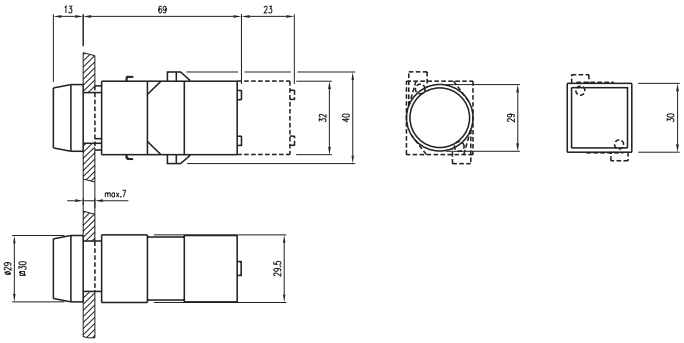


## 04 Pushbutton

Illuminated, Flush

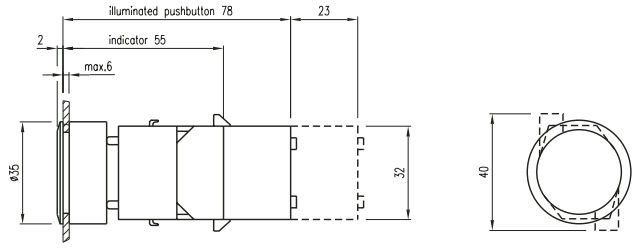

## 04 E-Stop

EN 418

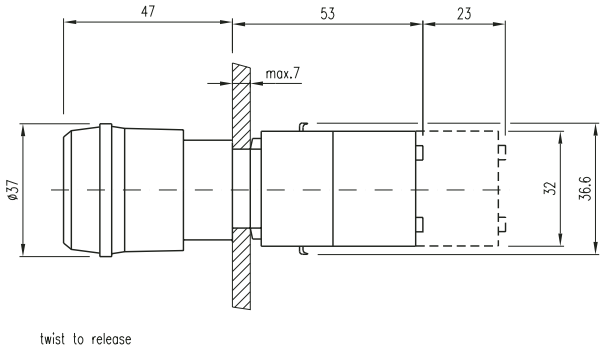


## 04 E-Stop

EN 418 with optional key

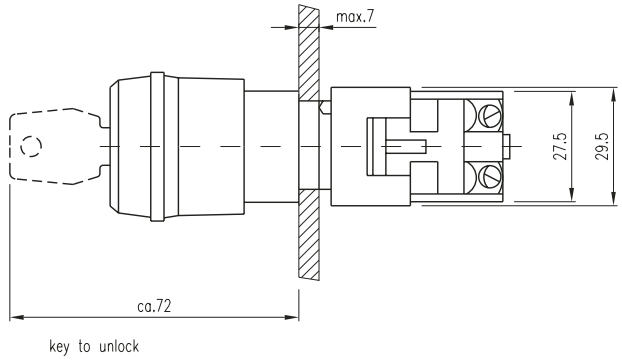


## 04 E-Stop Mushroom

Pushbutton Mushroom

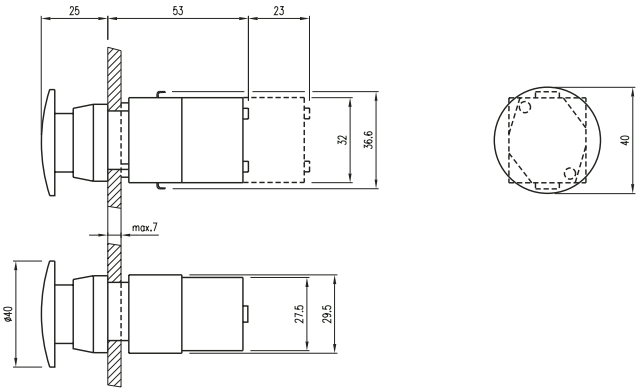


## 04 Keylock

2-Position, 3-Position, Raised

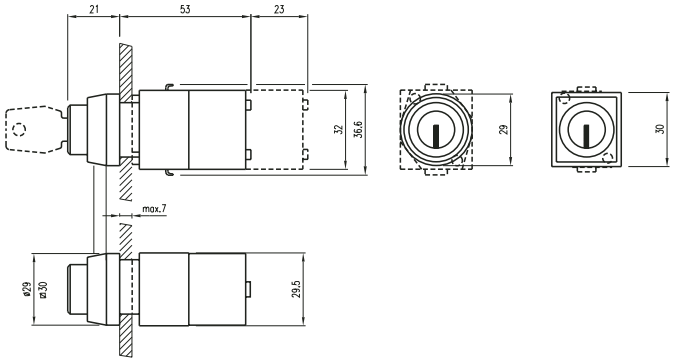


## 04 Keylock

2-Position, 3-Position, Flush

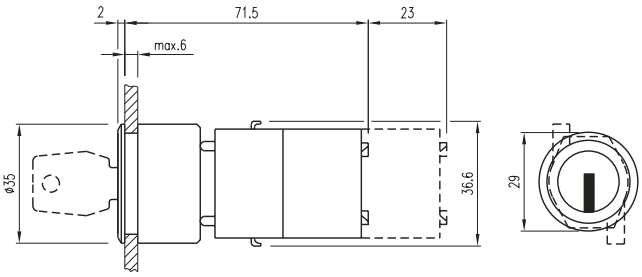


## 04 Selector

2-Position, 3-Position, Short and Long, Flush

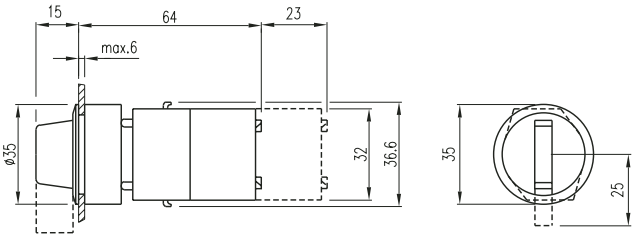

## 04 Selector, Short Lever

2-Position, 3-Position, Raised

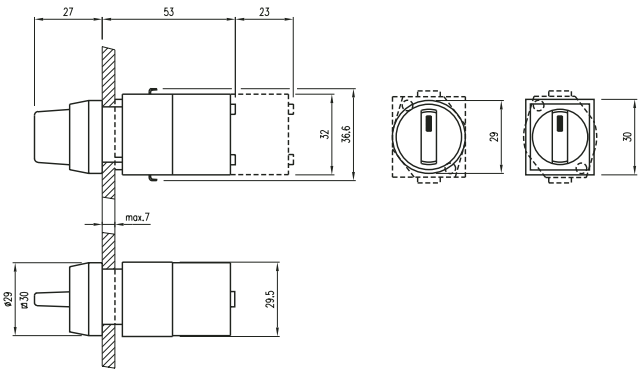


## 04 Selector, Long Lever

2-Position, 3-Position, Raised

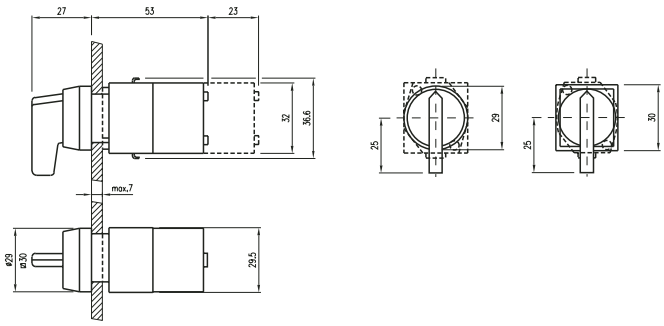


## 04 Buzzer

Raised

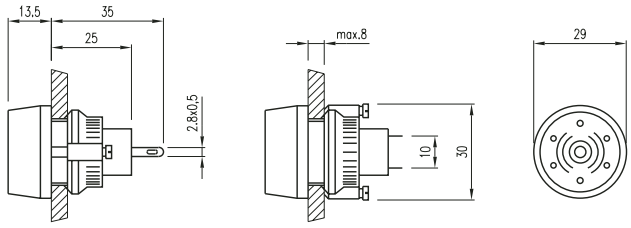


## 04 Buzzer

Flush

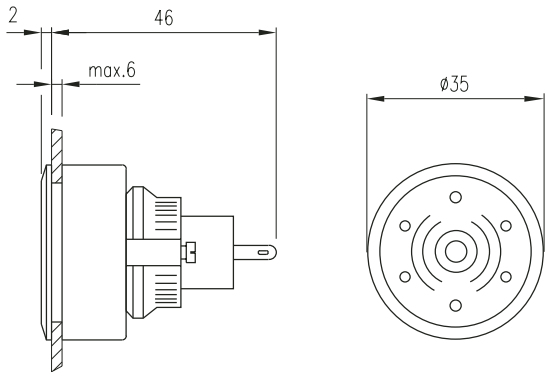

## 04 Cut-outs, Raised Mounting

(All but long lever)

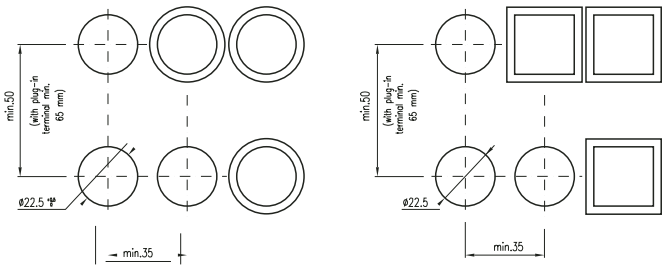


## 04 Cut-outs, Flush Mounting

(All but long lever)

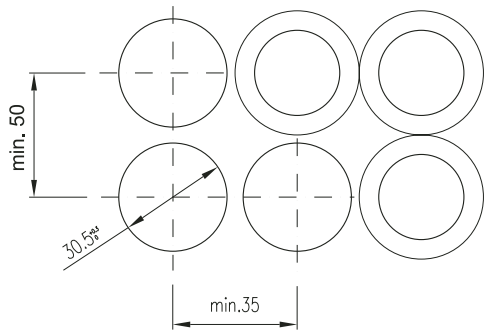


## 04 Long Lever Cut-outs, Raised Mounting

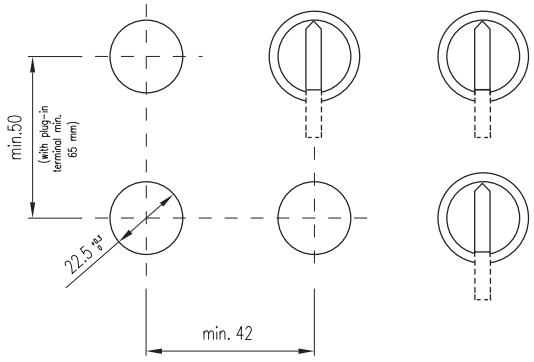


## 04 Long Lever Cut-outs, Flush Mounting

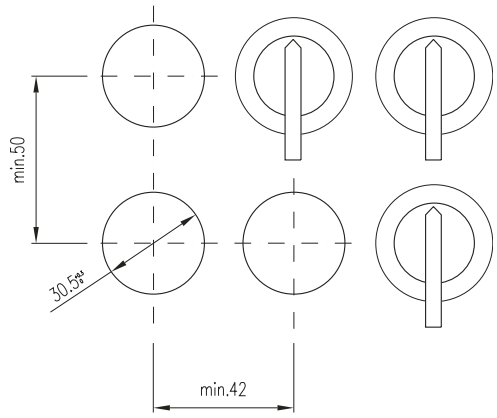


## 04 E-Stop EN418 Cut-outs

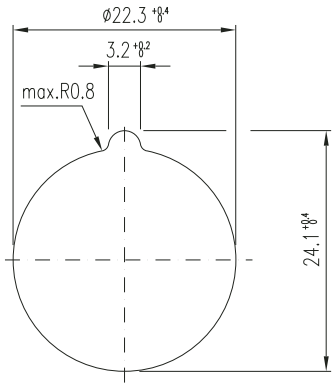


## 04 E-Stop Mushroom Cut-outs

Pushbutton Mushroom

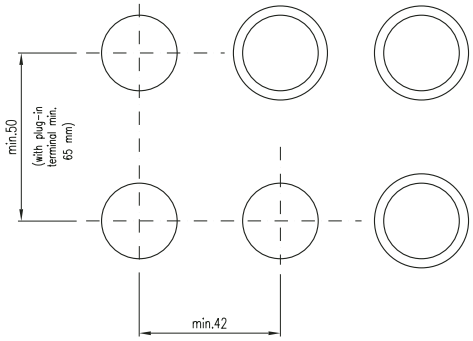

Мы молодая и активно развивающаяся компания в области поставок электронных компонентов. Мы поставляем электронные компоненты отечественного и импортного производства напрямую от производителей и с крупнейших складов мира.

Благодаря сотрудничеству с мировыми поставщиками мы осуществляем комплексные и плановые поставки широчайшего спектра электронных компонентов.

Собственная эффективная логистика и склад в обеспечивает надежную поставку продукции в точно указанные сроки по всей России.

Мы осуществляем техническую поддержку нашим клиентам и предпродажную проверку качества продукции. На все поставляемые продукты мы предоставляем гарантию .

Осуществляем поставки продукции под контролем ВП МО РФ на предприятия военно-промышленного комплекса России , а также работаем в рамках 275 ФЗ с открытием отдельных счетов в уполномоченном банке. Система менеджмента качества компании соответствует требованиям ГОСТ ISO 9001.

Минимальные сроки поставки, гибкие цены, неограниченный ассортимент и индивидуальный подход к клиентам являются основой для выстраивания долгосрочного и эффективного сотрудничества с предприятиями радиоэлектронной промышленности, предприятиями ВПК и научно-исследовательскими институтами России.

С нами вы становитесь еще успешнее!

**Наши контакты:**

**Телефон:** +7 812 627 14 35

**Электронная почта:** sales@st-electron.ru

**Адрес:** 198099, Санкт-Петербург, Промышленная ул, дом № 19, литера Н, помещение 100-Н Офис 331