Series 04

22.5mm 30.5mm IP65 10A 600VAC

INDICATOR | PUSHBUTTON | E-STOP | MUSHROOM | KEYLOCK | SELECTOR | BUZZER

Choose one component from each of the colored sections to assemble a complete switch.

Product Profile

The Series 04 is a high quality switch range that includes pushbuttons, indicators, selectors, mushroom headed switches, key switches, and Emergency-stops.

Options include self cleaning, slow-make and snap-action switching elements.

Technical drawings see pages 18-21

- IP65 Protection
- Switch Rating:
  Maximum Voltage, 600VAC
  Maximum Thermal Current, I_{th} = 10A
  230VAC/6A, 24VDC/10A
- Raised Mounting into 22.5mm cut out
- Flush Mounting into 30.5mm cut out
- Illumination using Ba9s (T-3¼ bayonet base) Lamps or LED's
- All standard lenses are transparent with translucent diffuser
- Screw terminal or plug-in connections

Indicator

Indicator, round, full face, 22.5mm mounting

Color	Part No.
Red	704.000.2
Yellow	704.000.4
Green	704.000.5
Blue	704.000.6
Clear	704.000.7

For complete switch also order

Indicator, flush mount, aluminum bezel, 30.5mm mounting

Color	Part No.
Red	704.006.218
Yellow	704.006.418
Green	704.006.518
Blue	704.006.618
Clear	704.006.718

For complete switch also order

Non-illuminated pushbutton

Non illuminated raised pushbutton, gray plastic bezel, 22.5mm mounting

Non illuminated raised pushbutton, aluminum bezel, 22.5mm mounting

Non illuminated flush mount pushbutton, aluminum bezel, 30.5mm mounting

Part Ordering System 704.02 - ( ) ( ) ( ) ( )

Pushbutton Action	Lens/Cap Style
1-Momentary	Standard-plastic
2-Momentary	Standard-metal
3-Momentary	Extended-plastic
4-Momentary	Mushroom-plastic
5-Maintained	Standard-plastic
6-Maintained	Standard-metal
7-Maintained	Extended-plastic
8-Maintained	Mushroom-plastic

Front Ring Style	Front Ring Material
0-Standard	Black plastic
1-Standard	Anodized Al
2-Sealed	Ni plated brass
	Silicone cover
3-Sealed	Anodized Al
	Silicon cover
4-Standard	Chrome plastic
6-Standard	Gray plastic
7-Extended	Gray plastic
9-Standard	Steel

Diffuser Type
0-Black
1-No diffuser (Mushroom or opaque lens)
7-Clear
9-White

Lens/Cap Color
0-Black
2-Red
3-Orange*
4-Yellow
5-Green
6-Blue**
7-White ***
8-Aluminum**
9-Steel**

For complete switch also order A

* Only available in standard plastic

** Not available with mushroom cap

*** Combination of clear lens and white diffuser

Color	Part No., Momentary	Part No., Maintained
Red	704.012.218	704.042.218
Yellow	704.012.418	704.042.418
Green	704.012.518	704.042.518
Blue	704.012.618	704.042.618
Clear	704.012.718	704.042.718
Black	704.012.018	704.042.218

For complete switch also order A

Choose one component from each of the colored sections to assemble a complete switch.
For other options or further information please contact EAO Switch directly.

BLOCK | LED | A ACCESSORIES

Illuminated pushbutton

Illuminated raised pushbutton, gray plastic bezel, 22.5mm mounting

Illuminated raised pushbutton, aluminum bezel, 22.5mm mounting

Illuminated flush mount pushbutton, aluminum bezel, 30.5mm mounting

Part Ordering System 704.01 - ( ) ( ) ( ) ( )

Pushbutton Action	Lens Style	Termination Style
1-Momentary	Standard	Screw
2-Momentary	Standard	0.250" Q.C.
3-Momentary	Extended	Screw
4-Momentary	Extended	0.250" Q.C.
5-Maintained	Standard	Screw
6-Maintained	Standard	0.250" Q.C.
7-Maintained	Extended	Screw
8-Maintained	Extended	0.250" Q.C.
9-Momentary	Mushroom	Screw
10-Momentary	Mushroom	0.250" Q.C.
11-Maintained	Mushroom	Screw
12-Maintained	Mushroom	0.250" Q.C.

Front Ring Material	
0-Standard	Black plastic
1-Standard	Anodized Al
2-Sealed	Ni plated brass
	Silicon cover
3-Sealed	Anodized Al
	Silicon cover
4-Standard	Chrome plastic
6-Standard	Gray plastic
7-Extended	Gray plastic
9-Standard	Steel

Diffuser* Type
7-Clear
9-White

Lens Color
2-Transparent red
3-Transparent orange
4-Transparent yellow
5-Transparent green
6-Transparent blue
7-White (uses clear lens/white diffuser)

Color	Part No., Momentary	Part No., Maintained
Red	704.032.218	704.062.218
Yellow	704.032.418	704.062.418
Green	704.032.518	704.062.518
Blue	704.032.618	704.062.618
Clear	704.032.718	704.062.718

For complete switch also order A

*White translucent for incandescent lamps and clear knurled for neon

For complete switch also order A

Illuminated pushbutton

Illuminated raised pushbutton, gray plastic bezel, 22.5mm mounting

Illuminated raised pushbutton, aluminum bezel, 22.5mm mounting

Part Ordering System 704.03 - ( ) ( ) ( ) ( )

Pushbutton Action	Lighted or Unlighted	Film Insert
0-Momentary	Lighted	With
1-Momentary	Lighted	Without
2-Momentary	Unlighted	With
3-Momentary	Unlighted	Without
4-Maintained	Lighted	With
5-Maintained	Lighted	Without
6-Maintained	Unlighted	With
7-Maintained	Unlighted	Without

Lamp Holder
0-No lamp holder
1-Lamp holder screw terminals
2-Lamp holder 0.250" Q.C. terminals

Bezel Color
0-Black
4-Chrome
6-Light gray

Lens Color
0-Black
2-Red
3-Orange
4-Yellow
5-Green
6-Blue
7-White*

For complete switch also order A

*Combination of clear lens and white diffuser

Choose one component from each of the colored sections to assemble a complete switch.

Emergency-stop switch

Emergency-stop, twist release, 37mm diameter, foolproof to EN 60947-5-1 and EN 418, use slow-make switching elements

Part No.
704.064.2

For emergency stop applications, a maximum of 2 switching elements can be used

For complete switch also order A

Emergency-stop, key release, 37mm diameter, foolproof to EN 60947-5-1 and EN 418, use slow-make switching elements

Part No.
704.066.2

For emergency stop applications, a maximum of 2 switching elements can be used

For complete switch also order A

Emergency-stop, twist release, mushroom head, 40mm diameter, use slow-make switching elements

Part No.	Front Ring	Markings
704.074.2	Gray plastic	Directional arrows
704.075.2	Anodized aluminum	Directional arrows

Mushroom headed pushbutton

Mushroom headed pushbutton, plastic bezel and aluminum bezel, 22.5mm mounting, function momentary

Color	Part No., Plastic	Part No., Aluminum
Red	704.070.2	704.071.2
Yellow	704.070.4	704.071.4
Green	704.070.5	704.071.5
Black	704.070.0	704.071.0

Maintained versions available as well

For complete switch also order A

Keylock switch

Keylock switch 2 position, raised, 22.5mm mounting

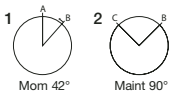

Drawing	Part No.	Action	Key rem.
1	704.123.0	Momentary	A
2	704.121.0	Maintained	C

For complete switch also order A

Keylock switch 2 position, flush mount, 30.5mm mounting

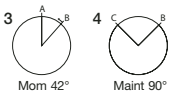

Drawing	Part No.	Action	Key rem.
3	704.123.018	Momentary	A
4	704.121.018	Maintained	C

For complete switch also order A

Choose one component from each of the colored sections to assemble a complete switch.
For other options or further information please contact EAO Switch directly.

BLOCK | LED | A ACCESSORIES

Keylock switch

Keylock switch 3 position, raised, 22.5mm mounting

5

Mom 42°

6

Maint 90°

Drawing	Part No.	Action	Key rem.
5	704.115.0	Momentary/Momentary	A
6	704.114.0	Maintained/Maintained	A

For complete switch also order A

Keylock switch 3 position, flush mount, 30.5mm mounting

7

Maint/Mom 42°

Drawing	Part No.	Action	Key rem.
7	704.115.018	Momentary/Momentary	A
7	704.114.018	Maintained/Maintained	A

For complete switch also order A

Selector switch

Selector switch short lever 2 position, raised, 22.5mm mounting

8

Mom 42°

9

Maint 90°

Drawing	Part No.	Action	Bezel
8	704.412.0	Momentary	Gray plastic
8	704.413.0	Momentary	Aluminum
9	704.410.0	Maintained	Gray plastic
9	704.411.0	Maintained	Aluminum

For complete switch also order A

Selector switch

Selector switch short lever 2 position, flush mount, 30.5mm mounting

10

Mom 42°

11

Maint 90°

Drawing	Part No.	Action	Bezel
10	704.413.018	Momentary	Aluminum
11	704.411.018	Maintained	Aluminum

For complete switch also order A

Selector switch short lever 3 position, raised, 22.5mm mounting

12

Maint/Mom 42°

Drawing	Part No.	Action	Bezel
12	704.404.0	Momentary/Momentary	Gray plastic
12	704.405.0	Momentary/Momentary	Aluminum
12	704.402.0	Maintained/Maintained	Gray plastic
12	704.403.0	Maintained/Maintained	Aluminum

For complete switch also order A

Selector switch short lever 3 position, flush mount, 30.5mm mounting

13

Maint/Mom 42°

Drawing	Part No.	Action	Bezel
13	704.405.018	Momentary	Aluminum
13	704.403.018	Maintained	Aluminum

For complete switch also order A

INDICATOR | PUSHBUTTON | E-STOP | MUSHROOM | KEYLOCK | SELECTOR | BUZZER

Choose one component from each of the colored sections to assemble a complete switch.

Selector switch

Selector switch long lever 2 position, raised, 22.5mm mounting

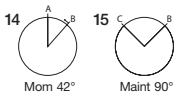

Drawing	Part No.	Action	Bezel
14	704.102.0	Momentary	Gray plastic
14	704.103.0	Momentary	Aluminum
15	704.100.0	Maintained	Gray plastic
15	704.101.0	Maintained	Aluminum

For complete switch also order A

Selector switch long lever 2 position, flush mount, 30.5mm mounting

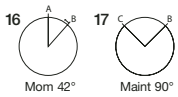

Drawing	Part No.	Action	Bezel
16	704.103.018	Momentary	Aluminum
17	704.101.018	Maintained	Aluminum

For complete switch also order A

Selector switch long lever 3 position, raised, 22.5mm mounting

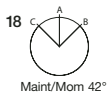

Drawing	Part No.	Action	Bezel
18	704.094.0	Momentary	Gray plastic
18	704.095.0	Momentary	Aluminum
18	704.092.0	Maintained	Gray plastic
18	704.093.0	Maintained	Aluminum

For complete switch also order A

Selector switch

Selector switch long lever 3 position, flush mount, 30.5mm mounting

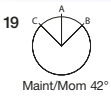

Drawing	Part No.	Action	Bezel
19	704.095.018	Momentary	Aluminum
19	704.093.018	Maintained	Aluminum

For complete switch also order A

Buzzer

Buzzer, plastic bezel, raised, 22.5mm mounting, 24VDC, 95dB ± 8 at a distance of 0.1m

Part No.	Front finish
14-810.002	Black plastic
14-810.902	Chromium-plated

Buzzer, plastic bezel, flush mount, 30.5mm mounting, 24VDC, IP40, 95dB ± 8 at a distance of 0.1m

Part No.	Front finish
14-810.910	Black plastic
14-810.918	Chromium-plated

Choose one component from each of the colored sections to assemble a complete switch.
For other options or further information please contact EAO Switch directly.

BLOCK | LED | A ACCESSORIES

Contact block

Contact block, screw terminal, snap-action with silver self-cleaning contacts

Part No.	Contact type
704.900.1	1NO
704.900.2	1NC
704.900.3	2NO
704.900.4	2NC
704.900.5	1NO/1NC
Not recommended for	
Emergency-stop applications	

For complete switch also order

Contact block, screw terminal, slow-make (positive-break) with silver forced opening contacts

Part No.	Contact type
704.910.2	1NC
704.910.4	2NC
704.910.5	1NO/1NC
704.910.1	1NO
704.910.2	2NO

For complete switch also order

LED

LED, Ba9s (T-3¼ bayonet base), single chip, 6 Volt and 12 Volt

Color	Part No.	Voltage
Red	10-2506.1082	6VDC, 17mA
Yellow	10-2506.1084	6VDC, 17mA
Green	10-2506.1085	6VDC, 17mA
Blue	10-2506.1086	6VDC, 17mA
White	10-2506.1089	6VDC, 17mA
Red	10-2509.1142	12VAC/DC, 16mA
Yellow	10-2509.1144	12VAC/DC, 16mA
Green	10-2509.1145	12VAC/DC, 7mA
Blue	10-2509.1146	12VAC/DC, 16mA
White	10-2509.1149	12VAC/DC, 16mA

LED

LED, Ba9s, single chip, (T-3¼ bayonet base) 24 Volt and 28 Volt

Color	Part No.	Voltage
Red	10-2512.1142	24VAC/DC, 15mA
Yellow	10-2512.1144	24VAC/DC, 15mA
Green	10-2512.1145	24VAC/DC, 7mA
Blue	10-2512.1146	24VAC/DC, 15mA
White	10-2512.1149	24VAC/DC, 15mA
Red	10-2513.1142	28VAC/DC, 13mA
Yellow	10-2513.1144	28VAC/DC, 13mA
Green	10-2513.1145	28VAC/DC, 7mA
Blue	10-2513.1146	28VAC/DC, 13mA
White	10-2513.1149	28VAC/DC, 13mA

LED, Ba9s, (T-3¼ bayonet base) single chip, 48 Volt

Color	Part No.	Voltage
Red	10-2519.1052	48VAC/DC, 8mA
Yellow	10-2519.1054	48VAC/DC, 8mA
Green	10-2519.1055	48VAC/DC, 4mA
Blue	10-2519.1056	48VAC/DC, 8mA
White	10-2519.1059	48VAC/DC, 8mA

LED, Ba9s, (T-3¼ bayonet base) single chip, 130 Volt and 230 Volt

Color	Part No.	Voltage
Red	10-2H24.2052	130VAC / 5mA
Yellow	10-2H24.2054	130VAC / 5mA
Green	10-2H24.2055	130VAC / 3mA
Blue	10-2H24.2056	130VAC / 5mA
White	10-2H24.2059	130VAC / 5mA
Red	10-2H25.2042	230VAC / 3mA
Yellow	10-2H25.2044	230VAC / 3mA
Green	10-2H25.2045	230VAC / 2mA
Blue	10-2H25.2046	230VAC / 3mA
White	10-2H25.2049	230VAC / 3mA

Choose one component from each of the colored sections to assemble a complete switch.

A Accessories

Lens cap, round, transparent, plastic for raised and flush indicators with bezel and pushbutton actuators

Color	Part No.
Red	704.602.2
Yellow	704.602.4
Green	704.602.5
Blue	704.602.6
Clear	704.602.7

For complete lens also order diffuser 704.609.9 (see page 21)

Protective cover, raised pushbutton

Part No.	Comment
704.925.0	for pushbuttons
704.925.3	for selector with short lever with “self return”

Protective front ring with silicon membrane for raised or flush mount pushbutton, natural anodized aluminum

Part No.	Size
704.600.3	29mm Ø for raised pushbutton
704.955.3	35mm Ø for flush mount pushbutton

A Accessories

Emergency-stop protective shroud, yellow painted aluminum with 22.5mm mounting hole

Part No.
Contact EAO Switch directly

Emergency-stop switch label, 60mm diameter, English, French and German with adhesive backing

Part No.	Markings
704.963.6	Emergency stop
704.963.5	Not Aus
704.963.7	Arret D'urgence
44-950	Blank

90mm versions also available

Emergency-stop switch enclosure with 22.5mm mounting hole

Image	Part No.
1	704.945.0
2	704.945.6

Choose one component from each of the colored sections to assemble a complete switch.
For other options or further information please contact EAO Switch directly.

BLOCK | LED | A ACCESSORIES

A Accessories

Blanking plate

Part No.	Mounting hole
704.960.7	22.5mm Ø
704.964.8	30.5mm Ø

Part No.
704.955.0
704.955.1

Lens, LED and lamp remover

Part No.
700.006.0

A Accessories

Legend plate, adhesive, natural anodized aluminum finish for raised and flush mount pushbuttons

Image	Part No.	Mounting hole
1	704.968.2	22.5mm Ø
2	704.968.3	30.5mm Ø

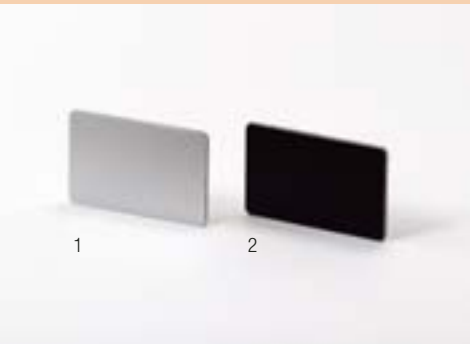

Label for front bezel set for 22.5 and 30.5mm flush mount with label support, self adhesive

Image	Part No.
1	704.968.0
2	704.968.1

04 Indicator

Raised

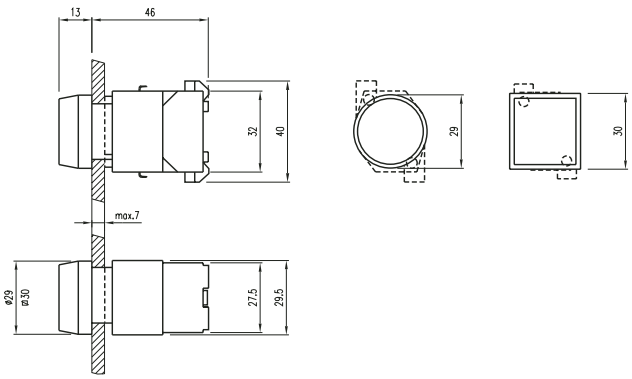

04 Indicator

Flush

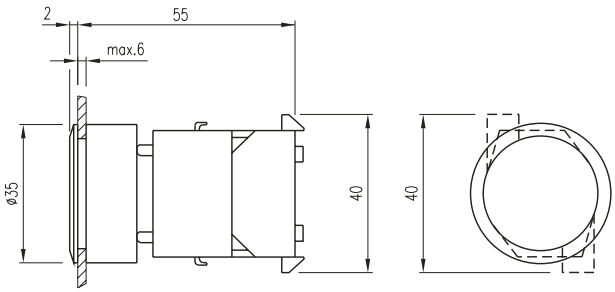

04 Pushbutton

Non-Illuminated, Raised

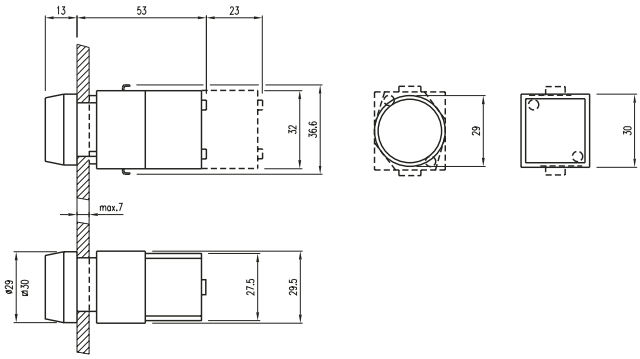

04 Pushbutton

Non-Illuminated, Flush

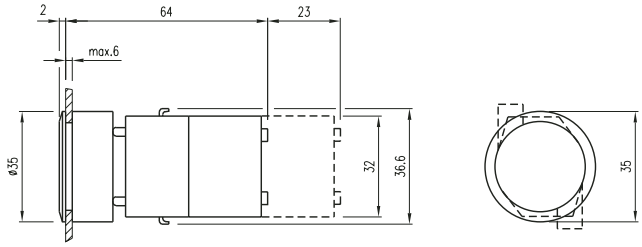

04 Pushbutton

Illuminated, Raised

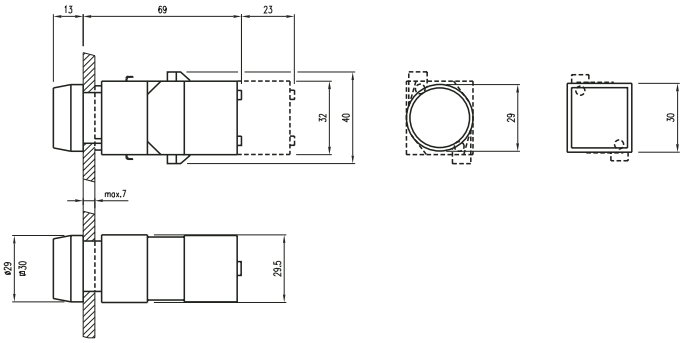

04 Pushbutton

Illuminated, Flush

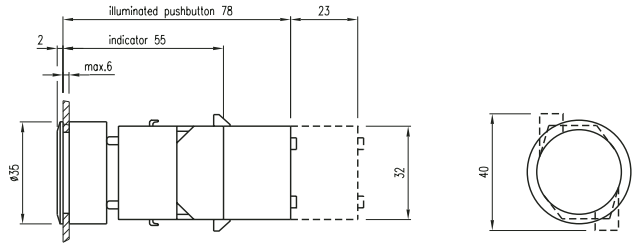

04 E-Stop

EN 418

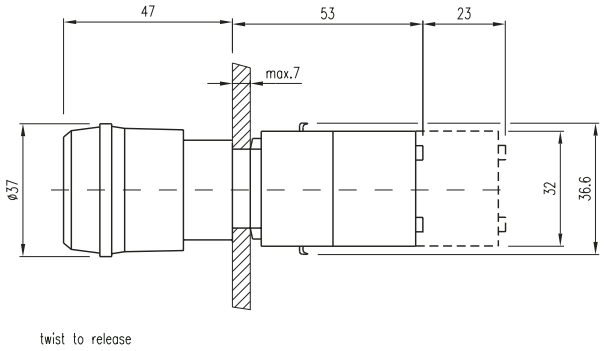

04 E-Stop

EN 418 with optional key

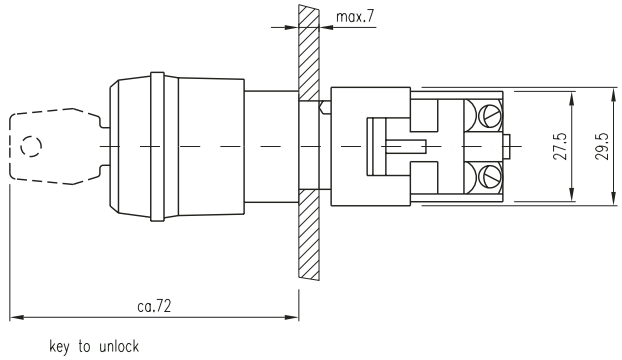

04 E-Stop Mushroom

Pushbutton Mushroom

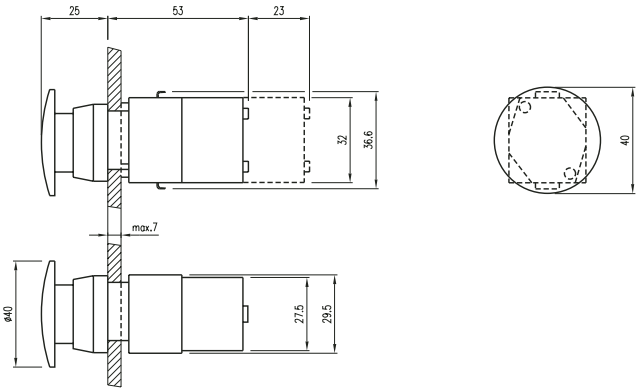

04 Keylock

2-Position, 3-Position, Raised

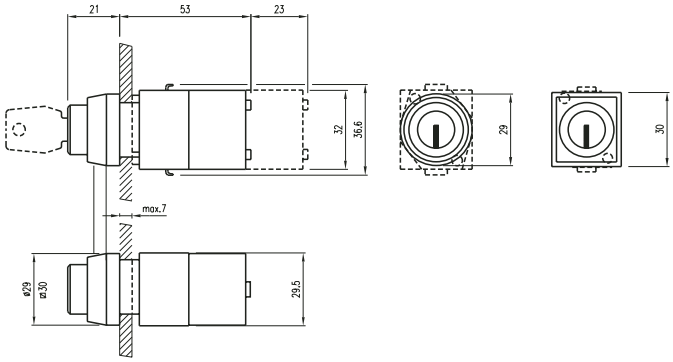

04 Keylock

2-Position, 3-Position, Flush

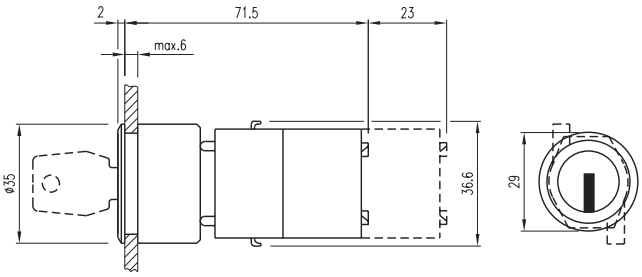

04 Selector

2-Position, 3-Position, Short and Long, Flush

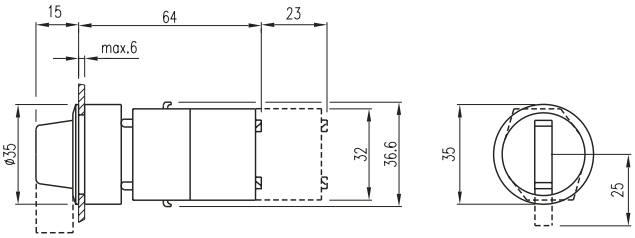

04 Selector, Short Lever

2-Position, 3-Position, Raised

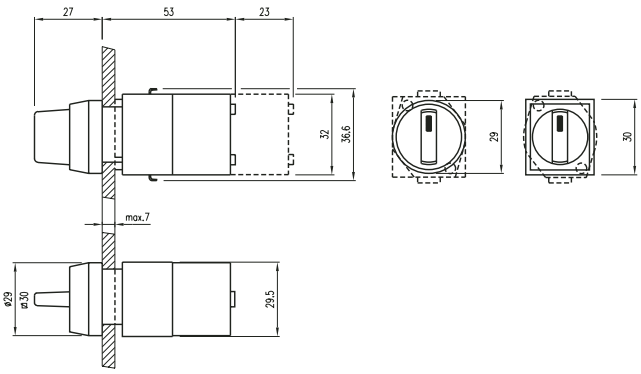

04 Selector, Long Lever

2-Position, 3-Position, Raised

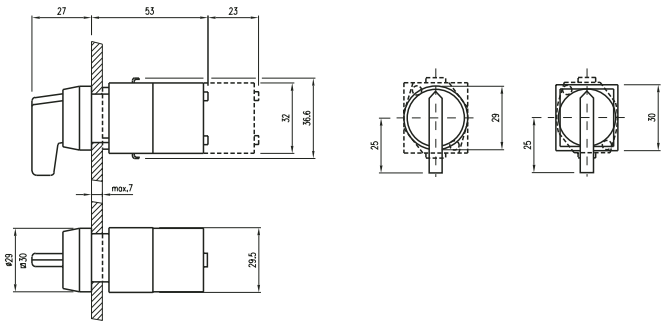

04 Buzzer

Raised

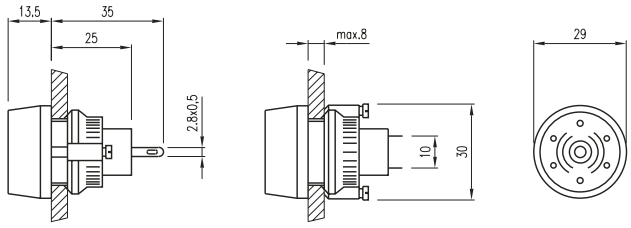

04 Buzzer

Flush

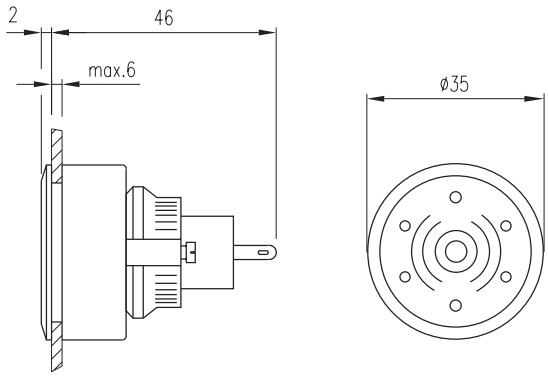

04 Cut-outs, Raised Mounting

(All but long lever)

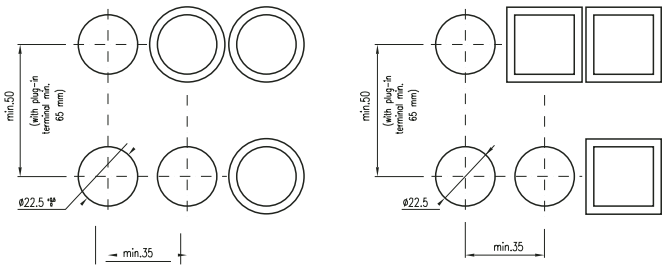

04 Cut-outs, Flush Mounting

(All but long lever)

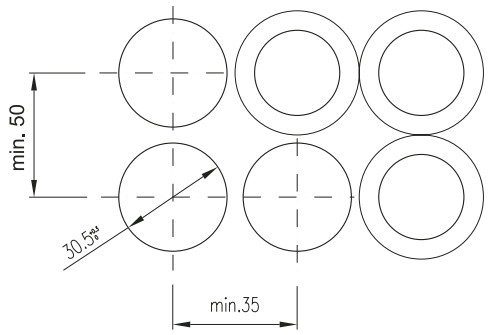

04 Long Lever Cut-outs, Raised Mounting

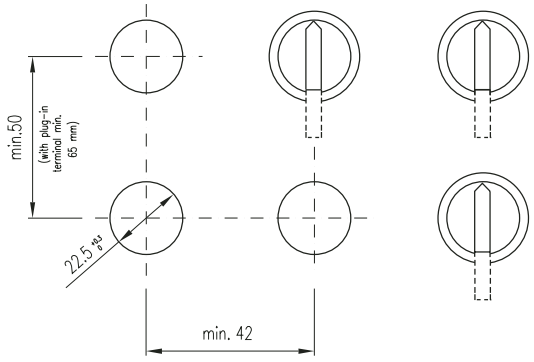

04 Long Lever Cut-outs, Flush Mounting

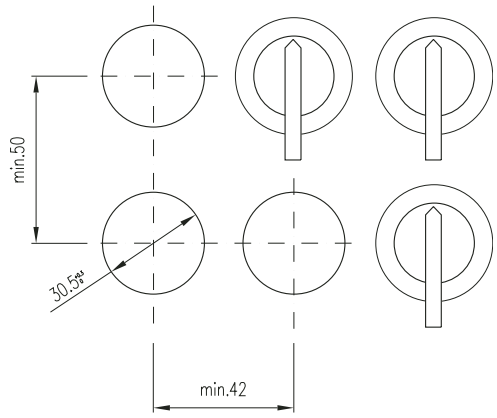

04 E-Stop EN418 Cut-outs

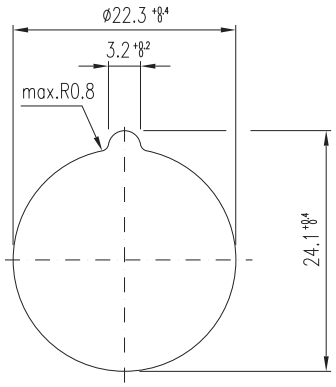

04 E-Stop Mushroom Cut-outs

Pushbutton Mushroom

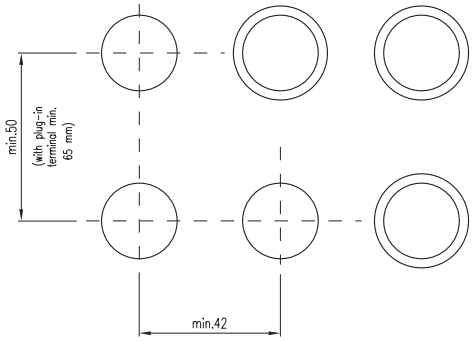

Мы молодая и активно развивающаяся компания в области поставок электронных компонентов. Мы поставляем электронные компоненты отечественного и импортного производства напрямую от производителей и с крупнейших складов мира.

Благодаря сотрудничеству с мировыми поставщиками мы осуществляем комплексные и плановые поставки широчайшего спектра электронных компонентов.

Собственная эффективная логистика и склад в обеспечивает надежную поставку продукции в точно указанные сроки по всей России.

Мы осуществляем техническую поддержку нашим клиентам и предпродажную проверку качества продукции. На все поставляемые продукты мы предоставляем гарантию .

Осуществляем поставки продукции под контролем ВП МО РФ на предприятия военно-промышленного комплекса России , а также работаем в рамках 275 ФЗ с открытием отдельных счетов в уполномоченном банке. Система менеджмента качества компании соответствует требованиям ГОСТ ISO 9001.

Минимальные сроки поставки, гибкие цены, неограниченный ассортимент и индивидуальный подход к клиентам являются основой для выстраивания долгосрочного и эффективного сотрудничества с предприятиями радиоэлектронной промышленности, предприятиями ВПК и научно-исследовательскими институтами России.

С нами вы становитесь еще успешнее!

Наши контакты:

Телефон: +7 812 627 14 35

Электронная почта: sales@st-electron.ru

Адрес: 198099, Санкт-Петербург, Промышленная ул, дом № 19, литера Н, помещение 100-Н Офис 331