1A, 1.2MHz/2.2MHz, Step-Up DC/DC Converters in ThinSOT

FEATURES

- **1.2MHz Switching Frequency (LT1930)**
- **2.2MHz Switching Frequency (LT1930A)**
- **Low V_{CESAT} Switch: 400mV at 1A**
- **High Output Voltage: Up to 34V**
- 5V at 480mA from 3.3V Input (LT1930)
- 12V at 250mA from 5V Input (LT1930A)
- Wide Input Range: 2.6V to 16V
- Uses Small Surface Mount Components
- Low Shutdown Current: <1µA
- Low Profile (1mm) ThinSOT™ Package
- Pin-for-Pin Compatible with the LT1613

APPLICATIONS

- TFT-LCD Bias Supply
- Digital Cameras
- Cordless Phones
- Battery Backup
- Medical Diagnostic Equipment
- Local 5V or 12V Supply
- External Modems
- PC Cards
- xDSL Power Supply

LT, LTC and LT are registered trademarks of Linear Technology Corporation
ThinSOT is a trademark of Linear Technology Corporation.

DESCRIPTION

The LT®1930 and LT1930A are the industry's highest power SOT-23 switching regulators. Both include an internal 1A, 36V switch allowing high current outputs to be generated in a small footprint. The LT1930 switches at 1.2MHz, allowing the use of tiny, low cost and low height capacitors and inductors. The faster LT1930A switches at 2.2MHz, enabling further reductions in inductor size. Complete regulator solutions approaching one tenth of a square inch in area are achievable with these devices. Multiple output power supplies can now use a separate regulator for each output voltage, replacing cumbersome quasi-regulated approaches using a single regulator and custom transformers.

A constant frequency internally compensated current mode PWM architecture results in low, predictable output noise that is easy to filter. Low ESR ceramic capacitors can be used at the output, further reducing noise to the millivolt level. The high voltage switch on the LT1930/LT1930A is rated at 36V, making the device ideal for boost converters up to 34V as well as for single-ended primary inductance converter (SEPIC) and flyback designs. The LT1930 can generate 5V at up to 480mA from a 3.3V supply or 5V at 300mA from four alkaline cells in a SEPIC design.

The LT1930/LT1930A are available in the 5-lead ThinSOT package.

TYPICAL APPLICATION

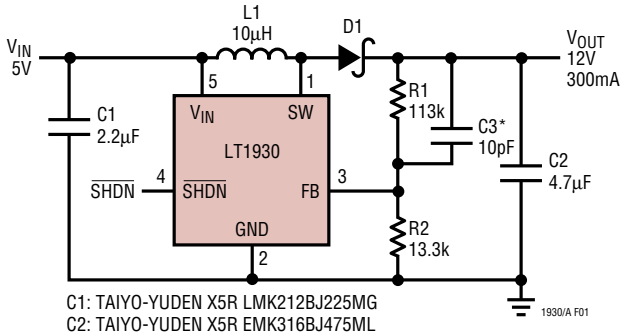

C1: TAIYO-YUDEN X5R LMK212BJ225MG
C2: TAIYO-YUDEN X5R EMK316BJ475ML
D1: ON SEMICONDUCTOR MBR0520
L1: SUMIDA CR43-100
*OPTIONAL

Figure 1. 5V to 12V, 300mA Step-Up DC/DC Converter

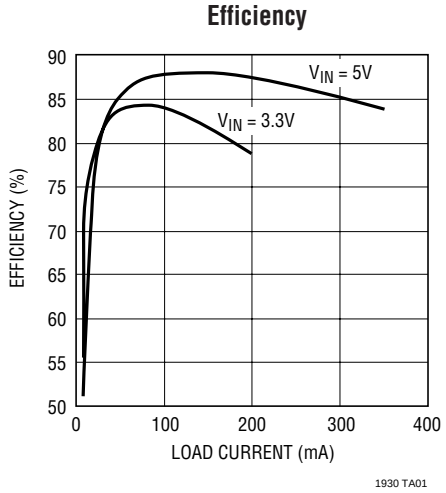

ABSOLUTE MAXIMUM RATINGS

(Note 1)

V_{IN} Voltage 16V
SW Voltage ..... –0.4V to 36V
FB Voltage 2.5V
Current Into FB Pin ..... ±1mA
$\overline{SHDN}$ Voltage 10V
Maximum Junction Temperature ..... 125°C
Operating Temperature Range (Note 2) .. –40°C to 85°C
Storage Temperature Range ..... –65°C to 150°C
Lead Temperature (Soldering, 10 sec) ..... 300°C

PACKAGE/ORDER INFORMATION

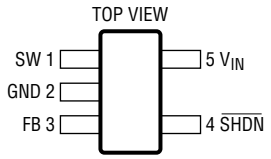

S5 PACKAGE
5-LEAD PLASTIC SOT-23
T_{JMAX} = 125°C, θ_{JA} = 256°C/W

ORDER PART NUMBER
LT1930ES5 LT1930AES5
S5 PART MARKING
LTKS LTSQ

Consult LTC Marketing for parts specified with wider operating temperature ranges.

ELECTRICAL CHARACTERISTICS

The ● denotes specifications which apply over the full operating temperature range, otherwise specifications are T_A = 25°C. V_{IN} = 3V, $V_{\overline{SHDN}}$ = V_{IN} unless otherwise noted. (Note 2)

PARAMETER	CONDITIONS		LT1930 MIN	LT1930 TYP	LT1930 MAX	LT1930A MIN	LT1930A TYP	LT1930A MAX	UNITS
Minimum Operating Voltage				2.45	2.6		2.45	2.6	V
Maximum Operating Voltage					16			16	V
Feedback Voltage			1.240	1.255	1.270	1.240	1.255	1.270	V
		●	1.230		1.280	1.230		1.280	V
FB Pin Bias Current	V_{FB} = 1.255V	●		120	360		240	720	nA
Quiescent Current	$V_{\overline{SHDN}}$ = 2.4V, Not Switching			4.2	6		5.5	8	mA
Quiescent Current in Shutdown	$V_{\overline{SHDN}}$ = 0V, V_{IN} = 3V			0.01	1		0.01	1	µA
Reference Line Regulation	2.6V ≤ V_{IN} ≤ 16V			0.01	0.05		0.01	0.05	%/V
Switching Frequency			1	1.2	1.4	1.8	2.2	2.6	MHz
		●	0.85		1.6	1.6		2.9	MHz
Maximum Duty Cycle		●	84	90		75	90		%
Switch Current Limit	(Note 3)		1	1.2	2	1	1.2	2.5	A
Switch V_{CESAT}	I_{SW} = 1A			400	600		400	600	mV
Switch Leakage Current	V_{SW} = 5V			0.01	1		0.01	1	µA
$\overline{SHDN}$ Input Voltage High			2.4			2.4			V
$\overline{SHDN}$ Input Voltage Low					0.5			0.5	V
$\overline{SHDN}$ Pin Bias Current	$V_{\overline{SHDN}}$ = 3V			16	32		35	70	µA
	$V_{\overline{SHDN}}$ = 0V			0	0.1		0	0.1	µA

Note 1: Absolute Maximum Ratings are those values beyond which the life of a device may be impaired.

Note 2: The LT1930E/LT1930AE are guaranteed to meet performance specifications from 0°C to 70°C. Specifications over the –40°C to 85°C operating temperature range are assured by design, characterization and correlation with statistical process controls.

Note 3: Current limit guaranteed by design and/or correlation to static test.

TYPICAL PERFORMANCE CHARACTERISTICS

Quiescent Current

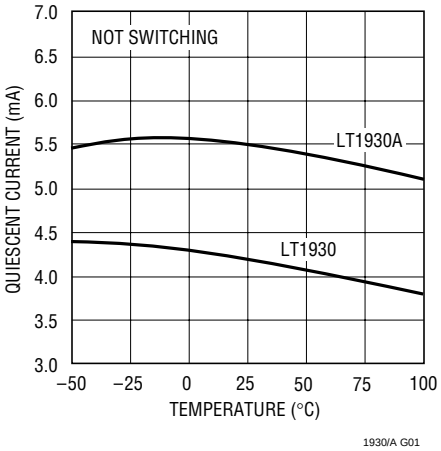

FB Pin Voltage

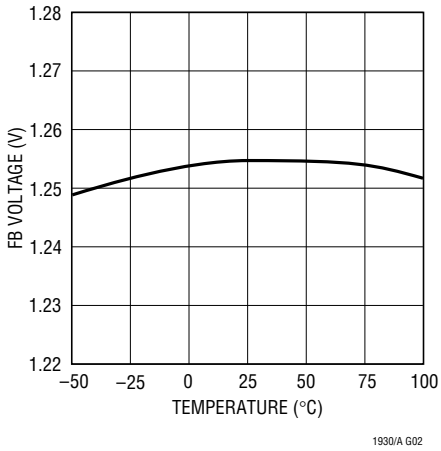

$\overline{\text{SHDN}}$ Pin Current

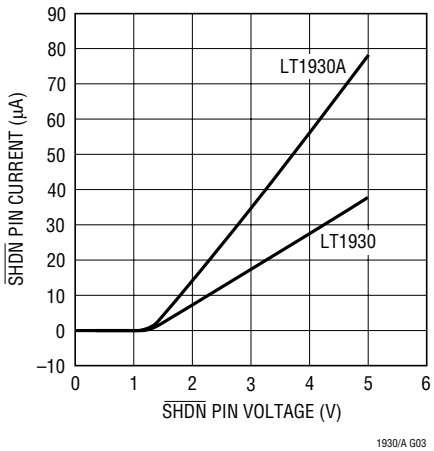

Current Limit

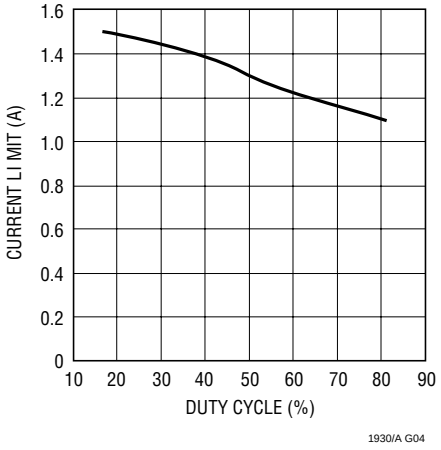

Switch Saturation Voltage

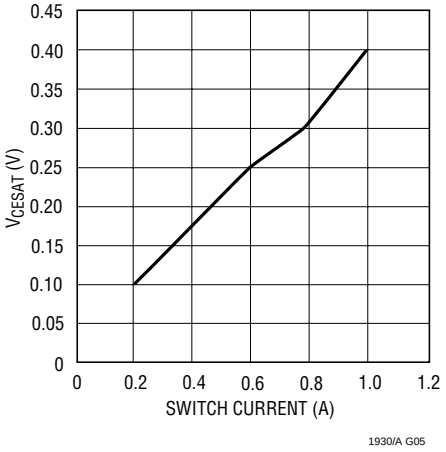

Oscillator Frequency

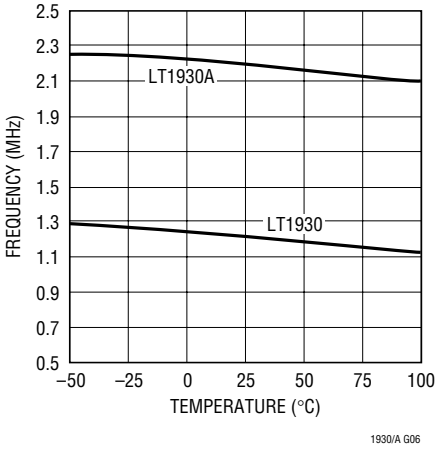

PIN FUNCTIONS

SW (Pin 1): Switch Pin. Connect inductor/diode here. Minimize trace area at this pin to reduce EMI.

GND (Pin 2): Ground. Tie directly to local ground plane.

FB (Pin 3): Feedback Pin. Reference voltage is 1.255V. Connect resistive divider tap here. Minimize trace area at FB. Set V_{OUT} according to V_{OUT} = 1.255V(1 + R1/R2).

$\overline{\text{SHDN}}$ (Pin 4): Shutdown Pin. Tie to 2.4V or more to enable device. Ground to shut down.

V_{IN} (Pin 5): Input Supply Pin. Must be locally bypassed.

BLOCK DIAGRAM

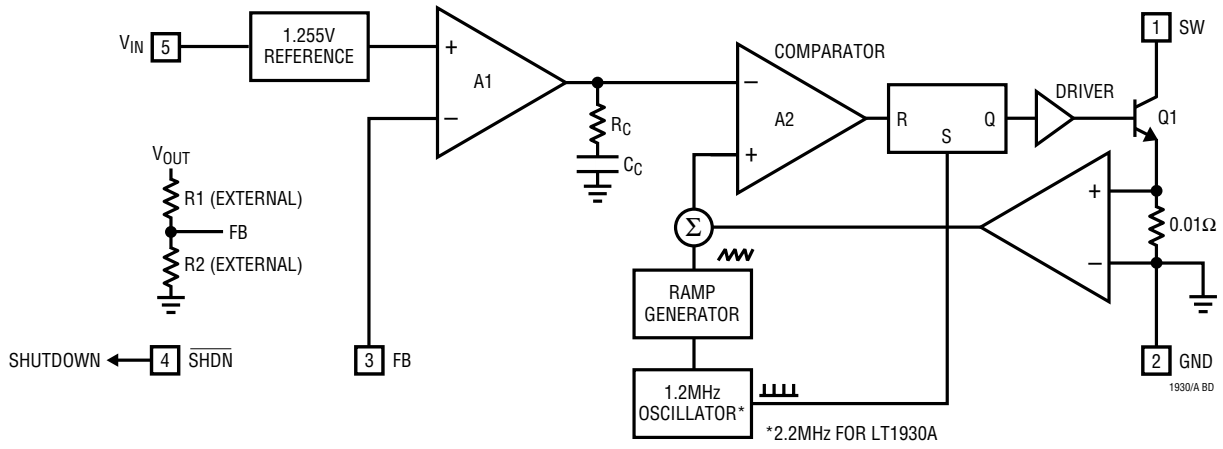

Figure 2. Block Diagram

OPERATION

The LT1930 uses a constant frequency, current-mode control scheme to provide excellent line and load regulation. Operation can be best understood by referring to the block diagram in Figure 2. At the start of each oscillator cycle, the SR latch is set, which turns on the power switch Q1. A voltage proportional to the switch current is added to a stabilizing ramp and the resulting sum is fed into the positive terminal of the PWM comparator A2. When this voltage exceeds the level at the negative input of A2, the SR latch is reset turning off the power switch. The level at the negative input of A2 is set by the error amplifier A1, and is simply an amplified version of the difference between the feedback voltage and the reference voltage of 1.255V. In this manner, the error amplifier sets the correct peak current level to keep the output in regulation. If the error amplifier's output increases, more current is delivered to the output; if it decreases, less current is delivered. The LT1930 has a current limit circuit not shown in Figure 2. The switch current is constantly monitored and not allowed to exceed the maximum switch current (typically 1.2A). If the switch current reaches this value, the SR latch is reset regardless of the state of comparator A2. This current limit helps protect the power switch as well as the external components connected to the LT1930.

The block diagram for the LT1930A (not shown) is identical except that the oscillator frequency is 2.2MHz.

APPLICATIONS INFORMATION

LT1930 AND LT1930A DIFFERENCES

Switching Frequency

The key difference between the LT1930 and LT1930A is the faster switching frequency of the LT1930A. At 2.2MHz, the LT1930A switches at nearly twice the rate of the LT1930. Care must be taken in deciding which part to use. The high switching frequency of the LT1930A allows smaller cheaper inductors and capacitors to be used in a given application, but with a slight decrease in efficiency and maximum output current when compared to the LT1930. Generally, if efficiency and maximum output current are critical, the LT1930 should be used. If application size and cost are more important, the LT1930A will be the better choice. In many applications, tiny inexpensive chip inductors can be used with the LT1930A, reducing solution cost.

Duty Cycle

The maximum duty cycle (DC) of the LT1930A is 75% compared to 84% for the LT1930. The duty cycle for a given application using the boost topology is given by:

$$DC = \frac{|V_{OUT}| - |V_{IN}|}{|V_{OUT}|}$$

For a 5V to 12V application, the DC is 58.3% indicating that the LT1930A could be used. A 5V to 24V application has a DC of 79.2% making the LT1930 the right choice. The LT1930A can still be used in applications where the DC, as calculated above, is above 75%. However, the part must be operated in the discontinuous conduction mode so that the actual duty cycle is reduced.

INDUCTOR SELECTION

Several inductors that work well with the LT1930 are listed in Table 1 and those for the LT1930A are listed in Table 2. These tables are not complete, and there are many other manufacturers and devices that can be used. Consult each manufacturer for more detailed information and for their entire selection of related parts, as many different sizes and shapes are available. Ferrite core inductors should be used to obtain the best efficiency, as core losses at 1.2MHz are much lower for ferrite cores than for cheaper powdered-iron types. Choose an inductor that can handle at least 1A without saturating, and ensure that the inductor has a low DCR (copper-wire resistance) to minimize I^2R power losses. A 4.7µH or 10µH inductor will be the best choice for most LT1930 designs. For LT1930A designs, a 2.2µH to 4.7µH inductor will usually suffice. Note that in some applications, the current handling requirements of the inductor can be lower, such as in the SEPIC topology where each inductor only carries one-half of the total switch current.

Table 1. Recommended Inductors – LT1930

PART	L (µH)	MAX DCR mΩ	SIZE L × W × H (mm)	VENDOR
CDRH5D18-4R1 CDRH5D18-100 CR43-4R7 CR43-100	4.1 10 4.7 10	57 124 109 182	4.5 × 4.7 × 2.0 3.2 × 2.5 × 2.0	Sumida (847) 956-0666 www.sumida.com
DS1608-472 DS1608-103	4.7 10	60 75	4.5 × 6.6 × 2.9	Coilcraft (847) 639-6400 www.coilcraft.com
ELT5KT4R7M ELT5KT6R8M	4.7 6.8	240 360	5.2 × 5.2 × 1.1	Panasonic (408) 945-5660 www.panasonic.com

Table 2. Recommended Inductors – LT1930A

PART	L (µH)	MAX DCR mΩ	SIZE L × W × H (mm)	VENDOR
LQH3C2R2M24 LQH3C4R7M24	2.2 4.7	126 195	3.2 × 2.5 × 2.0	Murata (404) 573-4150 www.murata.com
CR43-2R2 CR43-3R3	2.2 3.3	71 86	4.5 × 4.0 × 3.0	Sumida (847) 956-0666 www.sumida.com
1008PS-272 1008PS-332	2.7 3.3	100 110	3.7 × 3.7 × 2.6	Coilcraft (800) 322-2645 www.coilcraft.com
ELT5KT3R3M	3.3	204	5.2 × 5.2 × 1.1	Panasonic (408) 945-5660 www.panasonic.com

The inductors shown in Table 2 for use with the LT1930A were chosen for small size. For better efficiency, use similar valued inductors with a larger volume. For example, the Sumida CR43 series in values ranging from 2.2µH to 4.7µH will give an LT1930A application a few percentage points increase in efficiency, compared to the smaller Murata LQH3C Series.

APPLICATIONS INFORMATION

CAPACITOR SELECTION

Low ESR (equivalent series resistance) capacitors should be used at the output to minimize the output ripple voltage. Multi-layer ceramic capacitors are an excellent choice, as they have extremely low ESR and are available in very small packages. X5R dielectrics are preferred, followed by X7R, as these materials retain the capacitance over wide voltage and temperature ranges. A 4.7µF to 10µF output capacitor is sufficient for most applications, but systems with very low output currents may need only a 1µF or 2.2µF output capacitor. Solid tantalum or OSCON capacitors can be used, but they will occupy more board area than a ceramic and will have a higher ESR. Always use a capacitor with a sufficient voltage rating.

Ceramic capacitors also make a good choice for the input decoupling capacitor, which should be placed as close as possible to the LT1930/LT1930A. A 1µF to 4.7µF input capacitor is sufficient for most applications. Table 3 shows a list of several ceramic capacitor manufacturers. Consult the manufacturers for detailed information on their entire selection of ceramic parts.

Table 3. Ceramic Capacitor Manufacturers

Taiyo Yuden	(408) 573-4150	www.t-yuden.com
AVX	(803) 448-9411	www.avxcorp.com
Murata	(714) 852-2001	www.murata.com

The decision to use either low ESR (ceramic) capacitors or the higher ESR (tantalum or OSCON) capacitors can affect the stability of the overall system. The ESR of any capacitor, along with the capacitance itself, contributes a zero to the system. For the tantalum and OSCON capacitors, this zero is located at a lower frequency due to the higher value of the ESR, while the zero of a ceramic capacitor is at a much higher frequency and can generally be ignored.

A phase lead zero can be intentionally introduced by placing a capacitor (C3) in parallel with the resistor (R1) between V_{OUT} and V_{FB} as shown in Figure 1. The frequency of the zero is determined by the following equation.

$$f_Z = \frac{1}{2\pi \bullet R1 \bullet C3}$$

By choosing the appropriate values for the resistor and capacitor, the zero frequency can be designed to improve the phase margin of the overall converter. The typical target value for the zero frequency is between 35kHz to 55kHz. Figure 3 shows the transient response of the step-up converter from Figure 1 without the phase lead capacitor C3. The phase margin is reduced as evidenced by more ringing in both the output voltage and inductor current. A 10pF capacitor for C3 results in better phase margin, which is revealed in Figure 4 as a more damped response and less overshoot. Figure 5 shows the transient response when a 33µF tantalum capacitor with no phase lead capacitor is used on the output. The higher output voltage ripple is revealed in the upper waveform as a set of double lines. The transient response is not greatly improved which implies that the ESR zero frequency is too high to increase the phase margin.

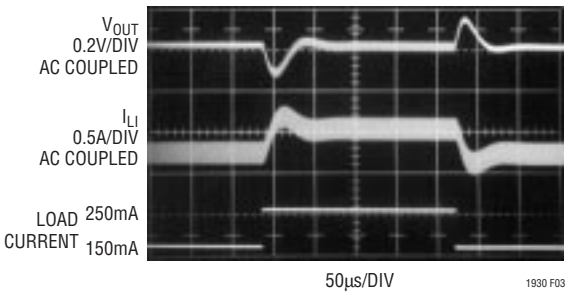

Figure 3. Transient Response of Figure 1's Step-Up Converter without Phase Lead Capacitor

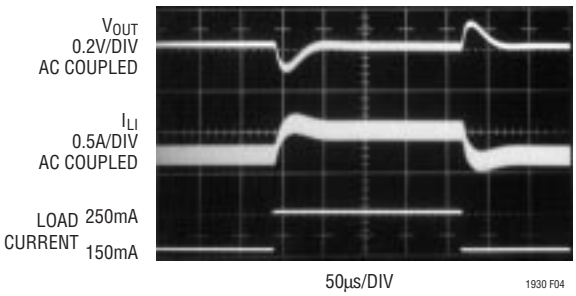

Figure 4. Transient Response of Figure 1's Step-Up Converter with 10pF Phase Lead Capacitor

APPLICATIONS INFORMATION

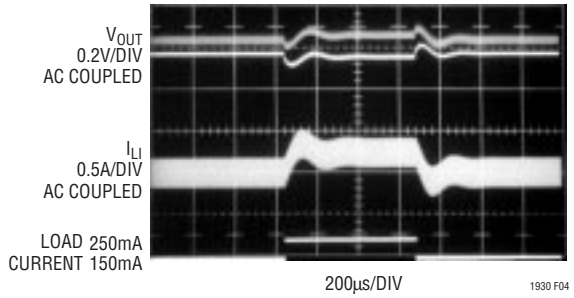

Figure 5. Transient Response of Step-Up Converter with 33µF Tantalum Output Capacitor and No Phase Lead Capacitor

DIODE SELECTION

A Schottky diode is recommended for use with the LT1930/LT1930A. The Motorola MBR0520 is a very good choice. Where the switch voltage exceeds 20V, use the MBR0530 (a 30V diode). Where the switch voltage exceeds 30V, use the MBR0540 (a 40V diode). These diodes are rated to handle an average forward current of 0.5A. In applications where the average forward current of the diode exceeds 0.5A, a Microsemi UPS5817 rated at 1A is recommended.

SETTING OUTPUT VOLTAGE

To set the output voltage, select the values of R1 and R2 (see Figure 1) according to the following equation.

$$R1 = R2\left(\frac{V_{OUT}}{1.255V} - 1\right)$$

A good value for R2 is 13.3k which sets the current in the resistor divider chain to 1.255V/13.3k = 94.7µA.

LAYOUT HINTS

The high speed operation of the LT1930/LT1930A demands careful attention to board layout. You will not get advertised performance with careless layout. Figure 6 shows the recommended component placement.

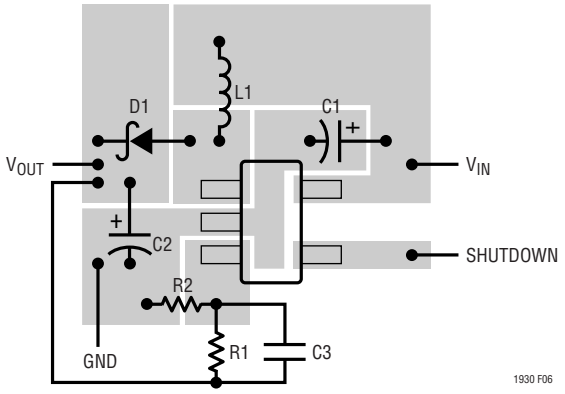

Figure 6. Suggested Layout

Driving $\overline{SHDN}$ Above 10V

The maximum voltage allowed on the $\overline{SHDN}$ pin is 10V. If you wish to use a higher voltage, you must place a resistor in series with $\overline{SHDN}$. A good value is 121k. Figure 7 shows a circuit where V_{IN} = 16V and $\overline{SHDN}$ is obtained from V_{IN}. The voltage on the $\overline{SHDN}$ pin is kept below 10V.

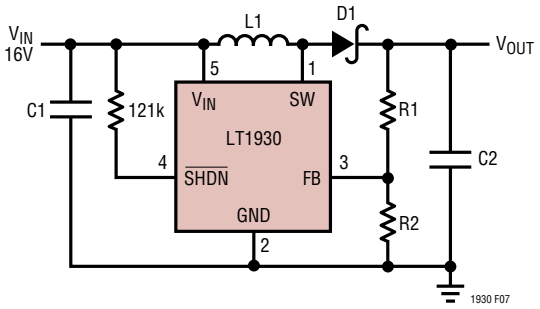

Figure 7. Keeping $\overline{SHDN}$ Below 10V

TYPICAL APPLICATIONS

4-Cell to 5V SEPIC Converter

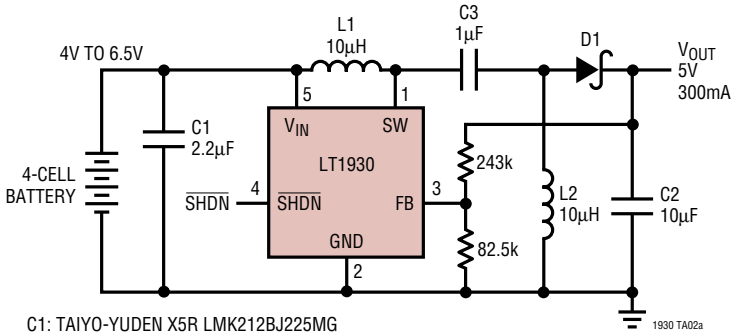

C1: TAIYO-YUDEN X5R LMK212BJ225MG
C2: TAIYO-YUDEN X5R JMK316BJ106ML D1: ON SEMICONDUCTOR MBR0520
C3: TAIYO-YUDEN X5R LMK212BJ105MG L1, L2: MURATA LQH3C100K24

Efficiency

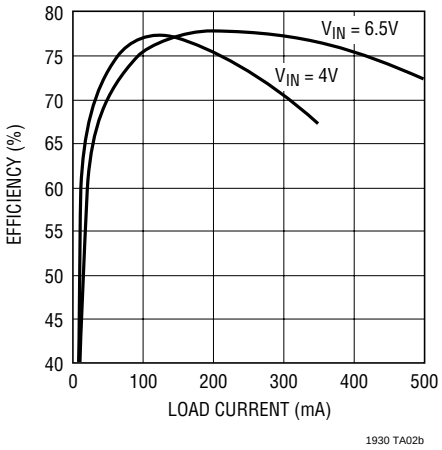

4-Cell to 5V SEPIC Converter with Coupled Inductors

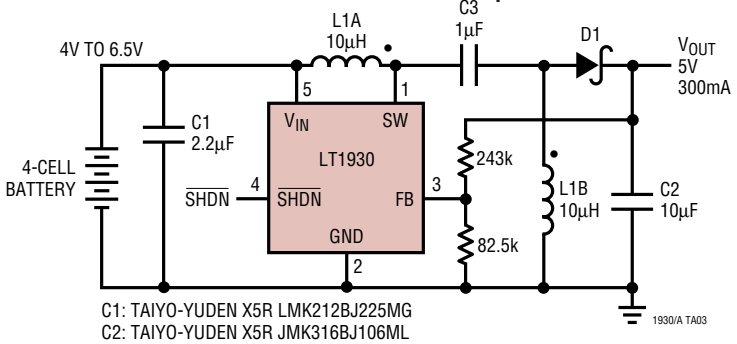

C1: TAIYO-YUDEN X5R LMK212BJ225MG
C2: TAIYO-YUDEN X5R JMK316BJ106ML
C3: TAIYO-YUDEN X5R LMK212BJ105MG
D1: ON SEMICONDUCTOR MBR0520
L1: SUMIDA CLS62-100

5V to 24V Boost Converter

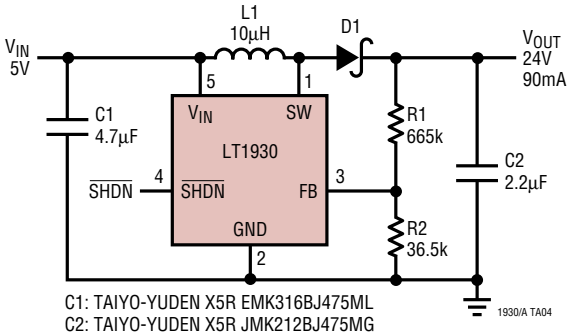

C1: TAIYO-YUDEN X5R EMK316BJ475ML
C2: TAIYO-YUDEN X5R JMK212BJ475MG
D1: ON SEMICONDUCTOR MBR0530
L1: SUMIDA CR43-100

±15V Dual Output Converter with Output Disconnect

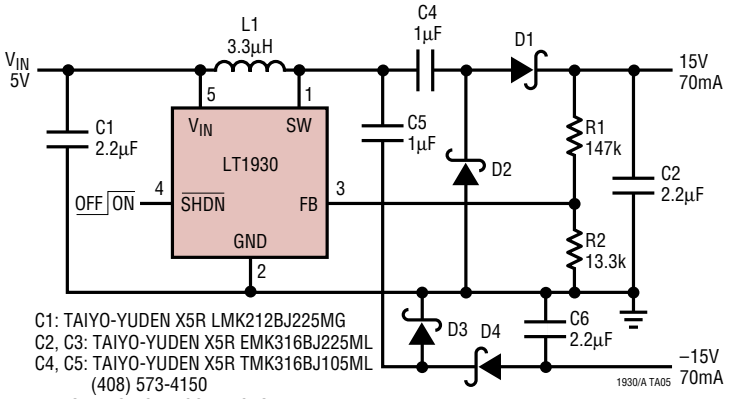

C1: TAIYO-YUDEN X5R LMK212BJ225MG
C2, C3: TAIYO-YUDEN X5R EMK316BJ225ML
C4, C5: TAIYO-YUDEN X5R TMK316BJ105ML
(408) 573-4150
D1 TO D4: ON SEMICONDUCTOR MBR0520 (800) 282-9855
L1: SUMIDA CR43-3R3 (874) 956-0666

TYPICAL APPLICATIONS

Boost Converter with Reverse Battery Protection

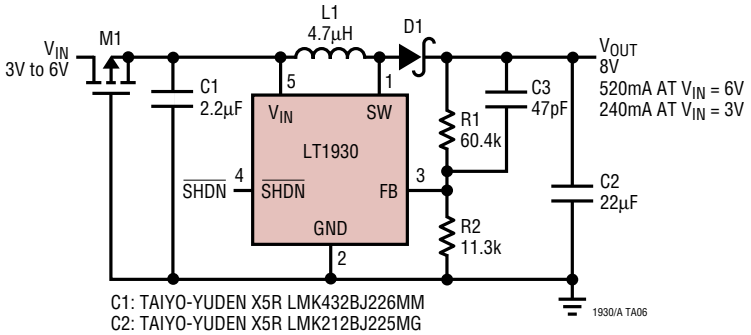

C1: TAIYO-YUDEN X5R LMK432BJ226MM
C2: TAIYO-YUDEN X5R LMK212BJ225MG
D1: ON SEMICONDUCTOR MBR0520
L1: SUMIDA CR43-4R7
M1: SILICONIX Si6433DQ

3.3V to 5V Boost Converter

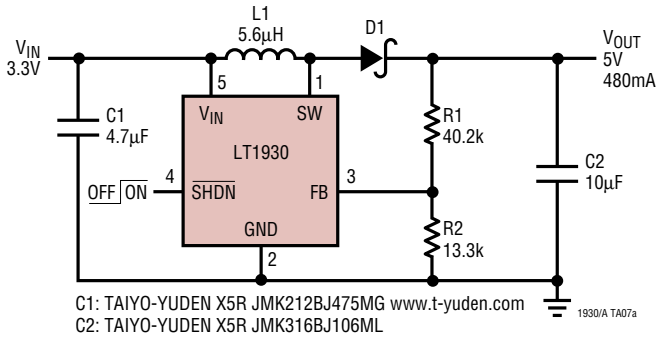

C1: TAIYO-YUDEN X5R JMK212BJ475MG www.t-yuden.com
C2: TAIYO-YUDEN X5R JMK316BJ106ML
D1: ON SEMICONDUCTOR MBR0520 www.onsemi.com
L1: SUMIDA CR43-5R6 www.sumida.com

Efficiency

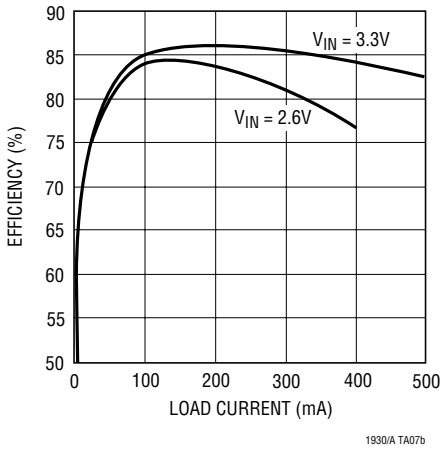

5V to 12V, 250mA Step-Up Converter

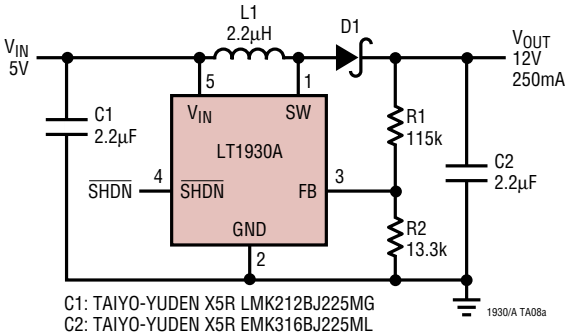

C1: TAIYO-YUDEN X5R LMK212BJ225MG
C2: TAIYO-YUDEN X5R EMK316BJ225ML
D1: ON SEMICONDUCTOR MBR0520
L1: MURATA LQH3C2R2M24

Efficiency

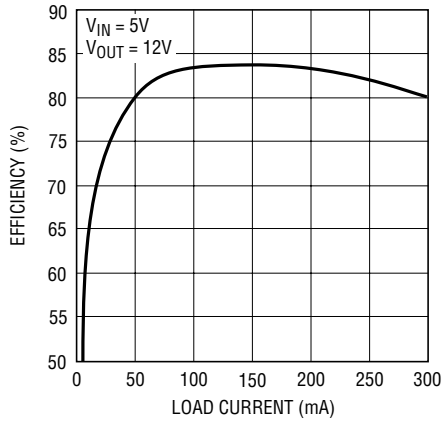

TYPICAL APPLICATIONS

9V, 18V, –9V Triple Output TFT-LCD Bias Supply with Soft-Start

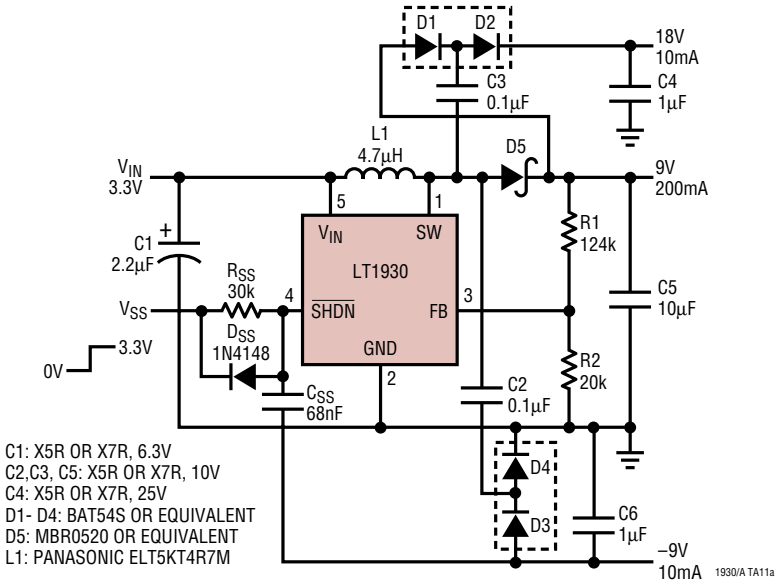

Start-Up Waveforms

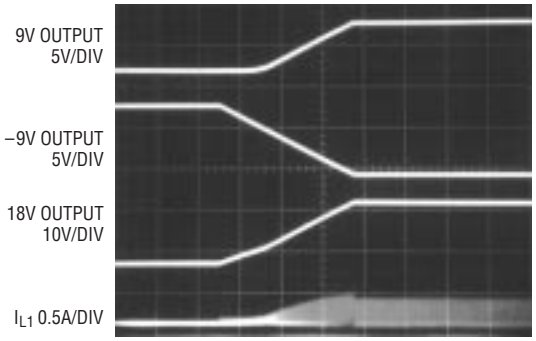

8V, 23V, –8V Triple Output TFT-LCD Bias Supply with Soft-Start

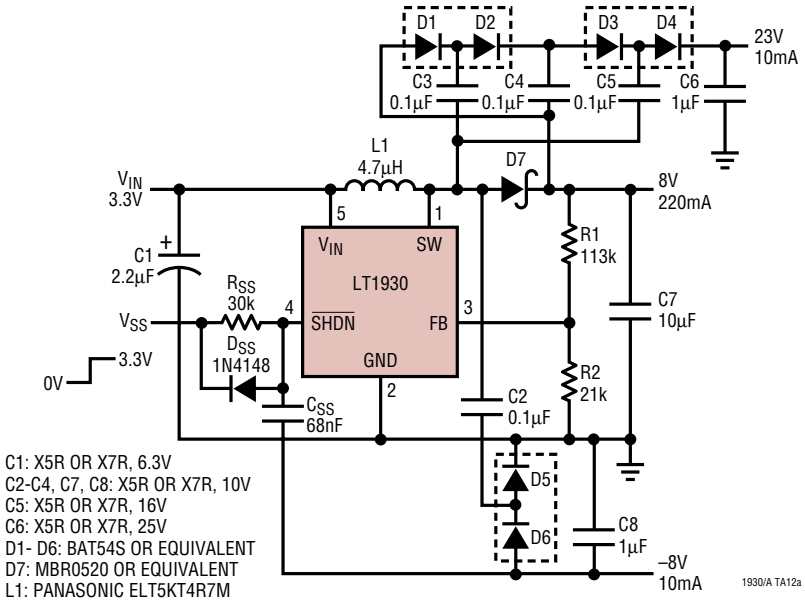

Start-Up Waveforms

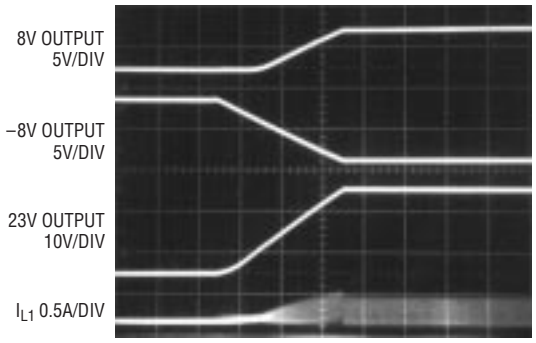

PACKAGE DESCRIPTION

S5 Package
5-Lead Plastic SOT-23
(Reference LTC DWG # 05-08-1633)
(Reference LTC DWG # 05-08-1635)

	SOT-23 (Original)	SOT-23 (ThinSOT)
A	.90 – 1.45 (.035 – .057)	1.00 MAX (.039 MAX)
A1	.00 – .15 (.00 – .006)	.01 – .10 (.0004 – .004)
A2	.90 – 1.30 (.035 – .051)	.80 – .90 (.031 – .035)
L	.35 – .55 (.014 – .021)	.30 – .50 REF (.012 – .019 REF)

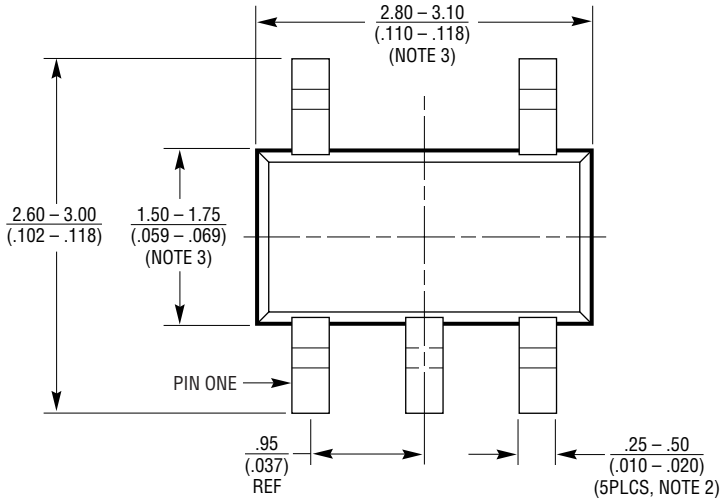

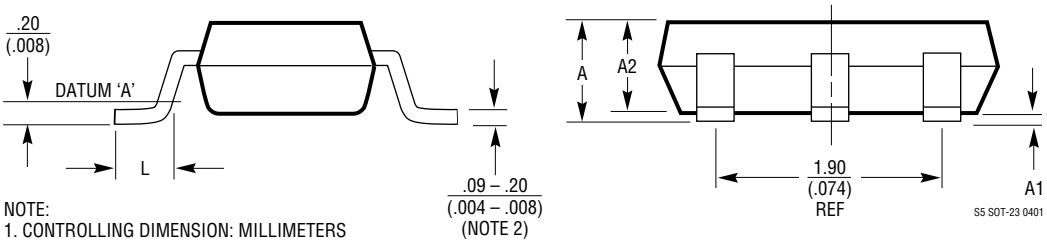

NOTE:
1. CONTROLLING DIMENSION: MILLIMETERS
2. DIMENSIONS ARE IN $\frac{\text{MILLIMETERS}}{\text{(INCHES)}}$
3. DRAWING NOT TO SCALE
4. DIMENSIONS ARE INCLUSIVE OF PLATING
5. DIMENSIONS ARE EXCLUSIVE OF MOLD FLASH AND METAL BURR
6. MOLD FLASH SHALL NOT EXCEED .254mm
7. PACKAGE EIAJ REFERENCE IS:
   SC-74A (EIAJ) FOR ORIGINAL
   JEDEL MO-193 FOR THIN

Information furnished by Linear Technology Corporation is believed to be accurate and reliable. However, no responsibility is assumed for its use. Linear Technology Corporation makes no representation that the interconnection of its circuits as described herein will not infringe on existing patent rights.

TYPICAL APPLICATION

3.3V to 5V, 450mA Step-Up Converter

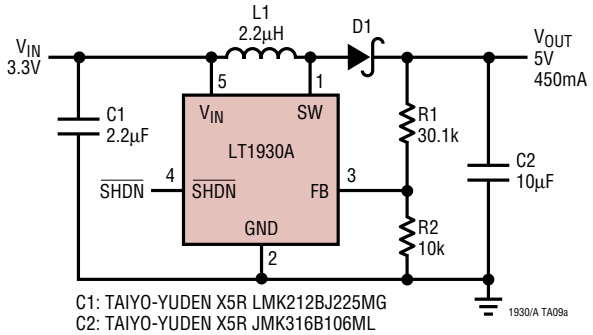

C1: TAIYO-YUDEN X5R LMK212BJ225MG
C2: TAIYO-YUDEN X5R JMK316B106ML
D1: ON SEMICONDUCTOR MBR0520
L1: MURATA LQH3C2R2M24

3.3V to 5V Transient Response

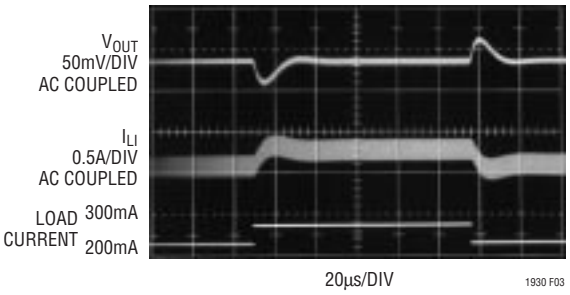

Efficiency

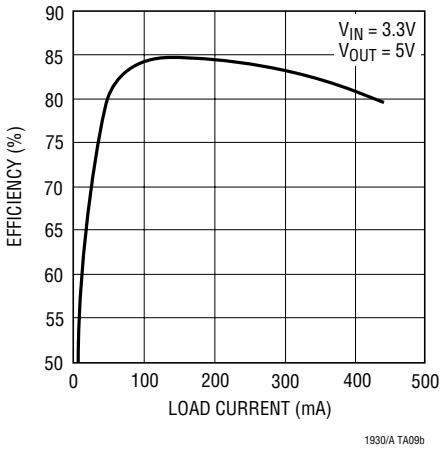

RELATED PARTS

PART NUMBER	DESCRIPTION	COMMENTS
LT1307	Single Cell Micropower 600kHz PWM DC/DC Converter	3.3V at 75mA from Single Cell, MSOP Package
LT1316	Burst Mode™ Operation DC/DC Converter with Programmable Current Limit	1.5V Minimum, Precise Control of Peak Current Limit
LT1317	2-Cell Micropower DC/DC Converter with Low-Battery Detector	3.3V at 200mA from 2 Cells, 600kHz Fixed Frequency
LT1610	Single Cell Micropower DC/DC Converter	3V at 30mA from 1V, 1.7MHz Fixed Frequency
LT1611	Inverting 1.4MHz Switching Regulator in 5-Lead ThinSOT	–5V at 150mA from 5V Input, ThinSOT Package
LT1613	1.4MHz Switching Regulator in 5-Lead ThinSOT	5V at 200mA from 3.3V Input, ThinSOT Package
LT1615	Micropower Constant Off-Time DC/DC Converter in 5-Lead ThinSOT	20V at 12mA from 2.5V, ThinSOT Package
LT1617	Micropower Inverting DC/DC Converter in 5-Lead ThinSOT	–15V at 12mA from 2.5V Input, ThinSOT Package
LT1931/LT1931A	Inverting 1.2MHz/2.2MHz Switching Regulator in 5-Lead ThinSOT	–5V at 350mA from 5V input, ThinSOT Package

Burst Mode is a trademark of Linear Technology Corporation.

Linear Technology Corporation
1630 McCarthy Blvd., Milpitas, CA 95035-7417
(408) 432-1900 • FAX: (408) 434-0507 • www.linear.com
1930af LT/TP 0801 2K • PRINTED IN USA
© LINEAR TECHNOLOGY CORPORATION 2001

Мы молодая и активно развивающаяся компания в области поставок электронных компонентов. Мы поставляем электронные компоненты отечественного и импортного производства напрямую от производителей и с крупнейших складов мира.

Благодаря сотрудничеству с мировыми поставщиками мы осуществляем комплексные и плановые поставки широчайшего спектра электронных компонентов.

Собственная эффективная логистика и склад в обеспечивает надежную поставку продукции в точно указанные сроки по всей России.

Мы осуществляем техническую поддержку нашим клиентам и предпродажную проверку качества продукции. На все поставляемые продукты мы предоставляем гарантию .

Осуществляем поставки продукции под контролем ВП МО РФ на предприятия военно-промышленного комплекса России , а также работаем в рамках 275 ФЗ с открытием отдельных счетов в уполномоченном банке. Система менеджмента качества компании соответствует требованиям ГОСТ ISO 9001.

Минимальные сроки поставки, гибкие цены, неограниченный ассортимент и индивидуальный подход к клиентам являются основой для выстраивания долгосрочного и эффективного сотрудничества с предприятиями радиоэлектронной промышленности, предприятиями ВПК и научно-исследовательскими институтами России.

С нами вы становитесь еще успешнее!

Наши контакты:

Телефон: +7 812 627 14 35

Электронная почта: sales@st-electron.ru

Адрес: 198099, Санкт-Петербург, Промышленная ул, дом № 19, литера Н, помещение 100-Н Офис 331