Single/Dual/Quad 100MHz, Rail-to-Rail Input and Output, Ultralow 1.9nV/√Hz Noise, Low Power Op Amps

FEATURES

- **Low Noise Voltage: 1.9nV/√Hz (100kHz)**
- **Low Supply Current: 3mA/Amp Max**
- **Gain Bandwidth Product: 100MHz**
- **Dual LT6203 in Tiny DFN Package**
- Low Distortion: –80dB at 1MHz
- Low Offset Voltage: 500µV Max
- Wide Supply Range: 2.5V to 12.6V
- Input Common Mode Range Includes Both Rails
- Output Swings Rail-to-Rail
- Common Mode Rejection Ratio 90dB Typ
- Unity Gain Stable
- Low Noise Current: 1.1pA/√Hz
- Output Current: 30mA Min
- Operating Temperature Range –40°C to 125°C
- Low Profile (1mm) SOT-23 (ThinSOT™) Package

APPLICATIONS

- Low Noise, Low Power Signal Processing
- Active Filters
- Rail-to-Rail Buffer Amplifiers
- Driving A/D Converters
- DSL Receivers
- Battery Powered/Battery Backed Equipment

DESCRIPTION

The LT®6202/LT6203/LT6204 are single/dual/quad low noise, rail-to-rail input and output unity gain stable op amps that feature 1.9nV/√Hz noise voltage and draw only 2.5mA of supply current per amplifier. These amplifiers combine very low noise and supply current with a 100MHz gain bandwidth product, a 25V/µs slew rate, and are optimized for low supply signal conditioning systems.

These amplifiers maintain their performance for supplies from 2.5V to 12.6V and are specified at 3V, 5V and ±5V supplies. Harmonic distortion is less than –80dBc at 1MHz making these amplifiers suitable in low power data acquisition systems.

The LT6202 is available in the 5-pin TSOT-23 and the 8-pin SO, while the LT6203 comes in 8-pin SO and MSOP packages with standard op amp pinouts. For compact layouts the LT6203 is also available in a tiny fine line leadless package (DFN), while the quad LT6204 is available in the 16-pin SSOP and 14-pin SO packages. These devices can be used as plug-in replacements for many op amps to improve input/output range and noise performance.

LT, LTC, LTM, Linear Technology and the Linear logo are registered trademarks of Linear Technology Corporation. ThinSOT is a trademark of Linear Technology Corporation. All other trademarks are the property of their respective owners.

TYPICAL APPLICATION

Low Noise 4- to 2-Wire Local Echo Cancellation Differential Receiver

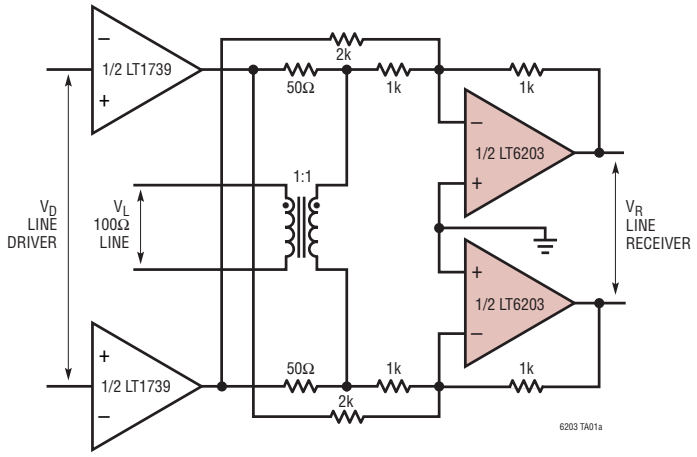

Line Receiver Integrated Noise 25kHz to 150kHz

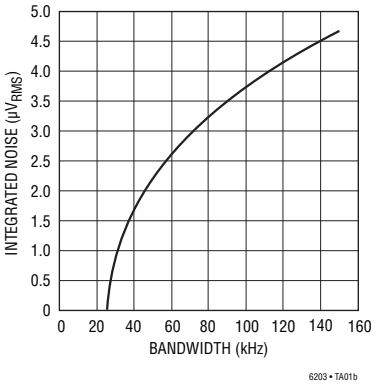

ABSOLUTE MAXIMUM RATINGS (Note 1)

Total Supply Voltage (V^+ to V^-) 12.6V
Input Current (Note 2) ..... ±40mA
Output Short-Circuit Duration (Note 3) ..... Indefinite
Operating Temperature Range (Note 4)
  LT6202C/LT6203C/LT6204C ..... –40°C to 85°C
  LT6202I/LT6203I/LT6204I ..... –40°C to 85°C
  LT6202H/LT6203H ..... –40°C to 125°C
Specified Temperature Range (Note 4)
  LT6202C/LT6203C/LT6204C ..... 0°C to 70°C
  LT6202I/LT6203I/LT6204I ..... –40°C to 85°C
  LT6202H/LT6203H ..... –40°C to 125°C
Junction Temperature ..... 150°C
Storage Temperature Range ..... –65°C to 150°C
Lead Temperature (Soldering, 10 sec) ..... 300°C

PIN CONFIGURATION

LT6202

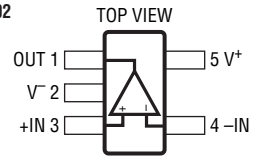

S5 PACKAGE
5-LEAD PLASTIC TSOT-23
T_{JMAX} = 150°C, θ_{JA} = 160°C/W

LT6202

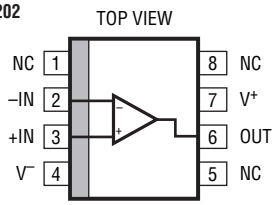

S8 PACKAGE
8-LEAD PLASTIC SO
T_{JMAX} = 150°C, θ_{JA} = 190°C/W

LT6203

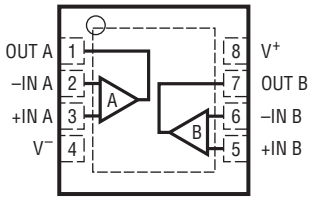

DD PACKAGE
8-LEAD (3mm × 3mm) PLASTIC DFN
T_{JMAX} = 150°C, θ_{JA} = 43°C/W
UNDERSIDE METAL CONNECTED TO V^-

LT6203

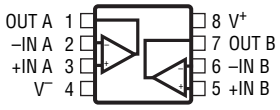

MS8 PACKAGE
8-LEAD PLASTIC MSOP
T_{JMAX} = 150°C, θ_{JA} = 250°C/W

LT6203

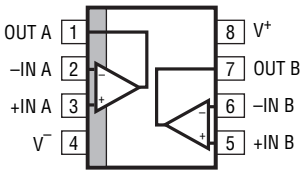

S8 PACKAGE
8-LEAD PLASTIC SO
T_{JMAX} = 150°C, θ_{JA} = 190°C/W

LT6204

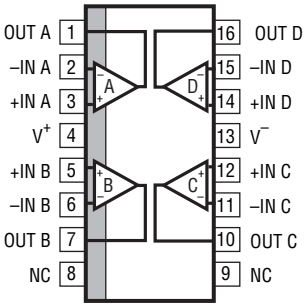

GN PACKAGE
16-LEAD NARROW PLASTIC SSOP
T_{JMAX} = 150°C, θ_{JA} = 135°C/W

LT6204

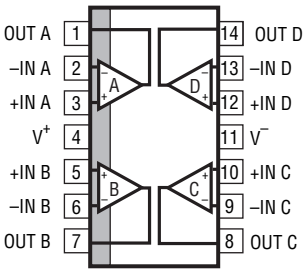

S PACKAGE
14-LEAD PLASTIC SO
T_{JMAX} = 150°C, θ_{JA} = 150°C/W

ORDER INFORMATION

LEAD FREE FINISH	TAPE AND REEL	PART MARKING*	PACKAGE DESCRIPTION	SPECIFIED TEMPERATURE RANGE
LT6202CS5#PBF	LT6202CS5#TRPBF	LTG6	5-Lead Plastic TSOT-23	0°C to 70°C
LT6202IS5#PBF	LT6202IS5#TRPBF	LTG6	5-Lead Plastic TSOT-23	–40°C to 85°C
LT6202HS5#PBF	LT6202HS5#TRPBF	LTG6	5-Lead Plastic TSOT-23	–40°C to 125°C
LT6202CS8#PBF	LT6202CS8#TRPBF	6202	8-Lead Plastic SO	0°C to 70°C
LT6202IS8#PBF	LT6202IS8#TRPBF	6202I	8-Lead Plastic SO	–40°C to 85°C
LT6203CDD#PBF	LT6203CDD#TRPBF	LAAP	8-Lead (3mm × 3mm) Plastic DFN	0°C to 70°C
LT6203IDD#PBF	LT6203IDD#TRPBF	LAAP	8-Lead (3mm × 3mm) Plastic DFN	–40°C to 85°C
LT6203CMS8#PBF	LT6203CMS8#TRPBF	LTB2	8-Lead Plastic MSOP	0°C to 70°C
LT6203IMS8#PBF	LT6203IMS8#TRPBF	LTB3	8-Lead Plastic MSOP	–40°C to 85°C
LT6203HMS8#PBF	LT6203HMS8#TRPBF	LTB3	8-Lead Plastic MSOP	–40°C to 125°C
LT6203CS8#PBF	LT6203CS8#TRPBF	6203	8-Lead Plastic SO	0°C to 70°C
LT6203IS8#PBF	LT6203IS8#TRPBF	6203I	8-Lead Plastic SO	–40°C to 85°C
LT6204CGN#PBF	LT6204CGN#TRPBF	6204	16-Lead Narrow Plastic SSOP	0°C to 70°C
LT6204IGN#PBF	LT6204IGN#TRPBF	6204I	16-Lead Narrow Plastic SSOP	–40°C to 85°C
LT6204CS#PBF	LT6204CS#TRPBF	LT6204CS	14-Lead Plastic SO	0°C to 70°C
LT6204IS#PBF	LT6204IS#TRPBF	LT6204IS	14-Lead Plastic SO	–40°C to 85°C

Consult LTC Marketing for parts specified with wider operating temperature ranges. *The temperature grade is identified by a label on the shipping container.
Consult LTC Marketing for information on non-standard lead based finish parts.

For more information on lead free part marking, go to: http://www.linear.com/leadfree/
For more information on tape and reel specifications, go to: http://www.linear.com/tapeandreel/

ELECTRICAL CHARACTERISTICS

T_A = 25°C, V_S =5V, 0V; V_S = 3V, 0V; V_{CM} = V_{OUT} = half supply, unless otherwise noted.

SYMBOL	PARAMETER	CONDITIONS	MIN	TYP	MAX	UNITS
V_{OS}	Input Offset Voltage	V_S = 5V, 0V, V_{CM} = Half Supply LT6203, LT6204, LT6202S8 LT6202 TSOT-23		 0.1 0.1	 0.5 0.7	 mV mV
		V_S = 3V, 0V, V_{CM} = Half Supply LT6203, LT6204, LT6202S8 LT6202 TSOT-23		 0.6 0.6	 1.5 1.7	 mV mV
		V_S = 5V, 0V, V_{CM} = V^+ to V^- LT6203, LT6204, LT6202S8 LT6202 TSOT-23		 0.25 0.25	 2.0 2.2	 mV mV
		V_S = 3V, 0V, V_{CM} = V^+ to V^- LT6203, LT6204, LT6202S8 LT6202 TSOT-23		 1.0 1.0	 3.5 3.7	 mV mV
	Input Offset Voltage Match (Channel-to-Channel) (Note 5)	V_{CM} = Half Supply V_{CM} = V^- to V^+		0.15 0.3	0.8 1.8	mV mV
I_B	Input Bias Current	V_{CM} = Half Supply V_{CM} = V^+ V_{CM} = V^-	–7.0 –8.8	–1.3 1.3 –3.3	 2.5 	µA µA µA
ΔI_B	I_B Shift	V_{CM} = V^- to V^+		4.7	11.3	µA
	I_B Match (Channel-to-Channel) (Note 5)			0.1	0.6	µA
I_{OS}	Input Offset Current	V_{CM} = Half Supply V_{CM} = V^+ V_{CM} = V^-		0.12 0.07 0.12	1 1 1.1	µA µA µA
	Input Noise Voltage	0.1Hz to 10Hz		800		nV_{P-P}
e_n	Input Noise Voltage Density	f = 100kHz, V_S = 5V f = 10kHz, V_S = 5V		2 2.9	 4.5	$nV/\sqrt{Hz}$ $nV/\sqrt{Hz}$
i_n	Input Noise Current Density, Balanced Input Noise Current Density, Unbalanced	f = 10kHz, V_S = 5V		0.75 1.1		$pA/\sqrt{Hz}$ $pA/\sqrt{Hz}$
	Input Resistance	Common Mode Differential Mode		4 12		MΩ kΩ
C_{IN}	Input Capacitance	Common Mode Differential Mode		1.8 1.5		pF pF
A_{VOL}	Large Signal Gain	V_S = 5V, V_O = 0.5V to 4.5V, R_L = 1k to V_S/2 V_S = 5V, V_O = 1V to 4V, R_L = 100 to V_S/2 V_S = 3V, V_O = 0.5V to 2.5V, R_L = 1k to V_S/2	40 8.0 17	70 14 40		V/mV V/mV V/mV
CMRR	Common Mode Rejection Ratio	V_S = 5V, V_{CM} = V^- to V^+ V_S = 5V, V_{CM} = 1.5V to 3.5V V_S = 3V, V_{CM} = V^- to V^+	60 80 56	83 100 80		dB dB dB
	CMRR Match (Channel-to-Channel) (Note 5)	V_S = 5V, V_{CM} = 1.5V to 3.5V	85	120		dB
PSRR	Power Supply Rejection Ratio	V_S = 2.5V to 10V, V_{CM} = 0V	60	74		dB
	PSRR Match (Channel-to-Channel) (Note 5)	V_S = 2.5V to 10V, V_{CM} = 0V	70	100		dB
	Minimum Supply Voltage (Note 6)		2.5			V
V_{OL}	Output Voltage Swing LOW Saturation (Note 7)	No Load I_{SINK} = 5mA V_S = 5V, I_{SINK} = 20mA V_S = 3V, I_{SINK} = 15mA		5 85 240 185	50 190 460 350	mV mV mV mV
V_{OH}	Output Voltage Swing HIGH Saturation (Note 7)	No Load I_{SOURCE} = 5mA V_S = 5V, I_{SOURCE} = 20mA V_S = 3V, I_{SOURCE} = 15mA		25 90 325 225	75 210 600 410	mV mV mV mV

ELECTRICAL CHARACTERISTICS

T_A = 25°C, V_S =5V, 0V; V_S = 3V, 0V; V_{CM} = V_{OUT} = half supply, unless otherwise noted.

SYMBOL	PARAMETER	CONDITIONS	MIN	TYP	MAX	UNITS
I_{SC}	Short-Circuit Current	V_S = 5V V_S = 3V	±30 ±25	±45 ±40		mA mA
I_S	Supply Current per Amp	V_S = 5V V_S = 3V		2.5 2.3	3.0 2.85	mA mA
GBW	Gain Bandwidth Product	Frequency = 1MHz, V_S = 5V		90		MHz
SR	Slew Rate	V_S = 5V, A_V = –1, R_L = 1k, V_O = 4V	17	24		V/µs
FPBW	Full Power Bandwidth (Note 9)	V_S = 5V, V_{OUT} = $3V_{P-P}$	1.8	2.5		MHz
t_S	Settling Time	0.1%, V_S = 5V, V_{STEP} = 2V, A_V = –1, R_L = 1k		85		ns

The ● denotes the specifications which apply over 0°C < T_A < 70°C temperature range. V_S = 5V, 0V; V_S = 3V, 0V; V_{CM} = V_{OUT} = half supply, unless otherwise noted.

SYMBOL	PARAMETER	CONDITIONS		MIN	TYP	MAX	UNITS
V_{OS}	Input Offset Voltage	V_S = 5V, 0V, V_{CM} = Half Supply LT6203, LT6204, LT6202S8 LT6202 TSOT-23	 ● ●		 0.2 0.2	 0.7 0.9	 mV mV
		V_S = 3V, 0V, V_{CM} = Half Supply LT6203, LT6204, LT6202S8 LT6202 TSOT-23	 ● ●		 0.6 0.6	 1.7 1.9	 mV mV
		V_S = 5V, 0V, V_{CM} = V^+ to V^- LT6203, LT6204, LT6202S8 LT6202 TSOT-23	 ● ●		 0.7 0.7	 2.5 2.7	 mV mV
		V_S = 3V, 0V, V_{CM} = V^+ to V^- LT6203, LT6204, LT6202S8 LT6202 TSOT-23	 ● ●		 1.2 1.2	 4.0 4.2	 mV mV
V_{OS} TC	Input Offset Voltage Drift (Note 8)	V_{CM} = Half Supply	●		3.0	9.0	µV/°C
	Input Offset Voltage Match (Channel-to-Channel) (Note 5)	V_{CM} = Half Supply V_{CM} = V^- to V^+	● ●		0.15 0.5	0.9 2.3	mV mV
I_B	Input Bias Current	V_{CM} = Half Supply V_{CM} = V^+ V_{CM} = V^-	● ● ●	–7.0 –8.8	–1.3 1.3 –3.3	 2.5 	µA µA µA
ΔI_B	I_B Shift	V_{CM} = V^- to V^+	●		4.7	11.3	µA
	I_B Match (Channel-to-Channel) (Note 5)		●		0.1	0.6	µA
I_{OS}	Input Offset Current	V_{CM} = Half Supply V_{CM} = V^+ V_{CM} = V^-	● ● ●		0.15 0.10 0.15	1 1 1.1	µA µA µA
A_{VOL}	Large Signal Gain	V_S = 5V, V_O = 0.5V to 4.5V, R_L = 1k to V_S/2 V_S = 5V, V_O = 1.5V to 3.5V, R_L = 100 to V_S/2 V_S = 3V, V_O = 0.5V to 2.5V, R_L = 1k to V_S/2	● ● ●	35 6.0 15	60 12 36		V/mV V/mV V/mV
CMRR	Common Mode Rejection Ratio	V_S = 5V, V_{CM} = V^- to V^+ V_S = 5V, V_{CM} = 1.5V to 3.5V V_S = 3V, V_{CM} = V^- to V^+	● ● ●	60 78 56	83 97 75		dB dB dB
	CMRR Match (Channel-to-Channel) (Note 5)	V_S = 5V, V_{CM} = 1.5V to 3.5V	●	83	100		dB
PSRR	Power Supply Rejection Ratio	V_S = 3V to 10V, V_{CM} = 0V	●	60	70		dB
	PSRR Match (Channel-to-Channel) (Note 5)	V_S = 3V to 10V, V_{CM} = 0V	●	70	100		dB
	Minimum Supply Voltage (Note 6)		●	3.0			V
V_{OL}	Output Voltage Swing LOW Saturation (Note 7)	No Load I_{SINK} = 5mA I_{SINK} = 15mA	● ● ●		5.0 95 260	60 200 365	mV mV mV

ELECTRICAL CHARACTERISTICS

The ● denotes the specifications which apply over 0°C < T_A < 70°C temperature range. V_S = 5V, 0V; V_S = 3V, 0V; V_{CM} = V_{OUT} = half supply, unless otherwise noted.

SYMBOL	PARAMETER	CONDITIONS		MIN	TYP	MAX	UNITS
V_{OH}	Output Voltage Swing HIGH Saturation (Note 7)	No Load	●		50	100	mV
		I_{SOURCE} = 5mA	●		115	230	mV
		V_S = 5V, I_{SOURCE} = 20mA	●		360	635	mV
		V_S = 3V, I_{SOURCE} = 15mA	●		260	430	mV
I_{SC}	Short-Circuit Current	V_S = 5V	●	±20	±33		mA
		V_S = 3V	●	±20	±30		mA
I_S	Supply Current per Amp	V_S = 5V	●		3.1	3.85	mA
		V_S = 3V	●		2.75	3.50	mA
GBW	Gain Bandwidth Product	Frequency = 1MHz	●		87		MHz
SR	Slew Rate	V_S = 5V, A_V = –1, R_L = 1k, V_O = 4V	●	15	21		V/µs
FPBW	Full Power Bandwidth (Note 9)	V_S = 5V, V_{OUT} = $3V_{P-P}$	●	1.6	2.2		MHz

The ● denotes the specifications which apply over –40°C < T_A < 85°C temperature range. V_S = 5V, 0V; V_S = 3V, 0V; V_{CM} = V_{OUT} = half supply, unless otherwise noted. (Note 4)

SYMBOL	PARAMETER	CONDITIONS		MIN	TYP	MAX	UNITS
V_{OS}	Input Offset Voltage	V_S = 5V, 0V, V_{CM} = Half Supply					
		LT6203, LT6204, LT6202S8	●		0.2	0.8	mV
		LT6202 TSOT-23	●		0.2	1.0	mV
		V_S = 3V, 0V, V_{CM} = Half Supply					
		LT6203, LT6204, LT6202S8	●		0.6	2.0	mV
		LT6202 TSOT-23	●		0.6	2.2	mV
		V_S = 5V, 0V, V_{CM} = V^+ to V^-					
		LT6203, LT6204, LT6202S8	●		1.0	3.0	mV
		LT6202 TSOT-23	●		1.0	3.5	mV
		V_S = 3V, 0V, V_{CM} = V^+ to V^-					
		LT6203, LT6204, LT6202S8	●		1.4	4.5	mV
		LT6202 TSOT-23	●		1.4	4.7	mV
V_{OS} TC	Input Offset Voltage Drift (Note 8)	V_{CM} = Half Supply	●		3.0	9.0	µV/°C
	Input Offset Voltage Match (Channel-to-Channel) (Note 5)	V_{CM} = Half Supply	●		0.3	1.0	mV
		V_{CM} = V^- to V^+	●		0.7	2.5	mV
I_B	Input Bias Current	V_{CM} = Half Supply	●	–7.0	–1.3		µA
		V_{CM} = V^+	●		1.3	2.5	µA
		V_{CM} = V^-	●	–8.8	–3.3		µA
ΔI_B	I_B Shift	V_{CM} = V^- to V^+	●		4.7	11.3	µA
	I_B Match (Channel-to-Channel) (Note 5)		●		0.1	0.6	µA
I_{OS}	Input Offset Current	V_{CM} = Half Supply	●		0.2	1	µA
		V_{CM} = V^+	●		0.2	1.1	µA
		V_{CM} = V^-	●		0.2	1.2	µA
A_{VOL}	Large Signal Gain	V_S = 5V, V_O = 0.5V to 4.5V, R_L = 1k to V_S/2	●	32	60		V/mV
		V_S = 5V, V_O = 1.5V to 3.5V, R_L = 100 to V_S/2	●	4.0	10		V/mV
		V_S = 3V, V_O = 0.5V to 2.5V, R_L = 1k to V_S/2	●	13	32		V/mV
CMRR	Common Mode Rejection Ratio	V_S = 5V, V_{CM} = V^- to V^+	●	60	80		dB
		V_S = 5V, V_{CM} = 1.5V to 3.5V	●	75	95		dB
		V_S = 3V, V_{CM} = V^- to V^+	●	56	75		dB
	CMRR Match (Channel-to-Channel) (Note 5)	V_S = 5V, V_{CM} = 1.5V to 3.5V	●	80	100		dB
PSRR	Power Supply Rejection Ratio	V_S = 3V to 10V, V_{CM} = 0V	●	60	70		dB
	PSRR Match (Channel-to-Channel) (Note 5)	V_S = 3V to 10V, V_{CM} = 0V	●	70	100		dB
	Minimum Supply Voltage (Note 6)		●	3.0			V

ELECTRICAL CHARACTERISTICS

The ● denotes the specifications which apply over –40°C < T_A < 85°C temperature range. V_S = 5V, 0V; V_S = 3V, 0V; V_{CM} = V_{OUT} = half supply, unless otherwise noted. (Note 4)

SYMBOL	PARAMETER	CONDITIONS		MIN	TYP	MAX	UNITS
V_{OL}	Output Voltage Swing LOW Saturation (Note 7)	No Load	●		6	70	mV
		I_{SINK} = 5mA	●		95	210	mV
		I_{SINK} = 15mA	●		210	400	mV
V_{OH}	Output Voltage Swing HIGH Saturation (Note 7)	No Load	●		55	110	mV
		I_{SOURCE} = 5mA	●		125	240	mV
		V_S = 5V, I_{SOURCE} = 15mA	●		370	650	mV
		V_S = 3V, I_{SOURCE} = 15mA	●		270	650	mV
I_{SC}	Short-Circuit Current	V_S = 5V	●	±15	±25		mA
		V_S = 3V	●	±15	±23		mA
I_S	Supply Current per Amp	V_S = 5V	●		3.3	4.1	mA
		V_S = 3V	●		3.0	3.65	mA
GBW	Gain Bandwidth Product	Frequency = 1MHz	●		83		MHz
SR	Slew Rate	V_S = 5V, A_V = –1, R_L = 1k, V_O = 4V	●	12	17		V/µs
FPBW	Full Power Bandwidth (Note 9)	V_S = 5V, V_{OUT} = $3V_{P-P}$	●	1.3	1.8		MHz

The ● denotes the specifications which apply over –40°C < T_A < 125°C temperature range. V_S = 5V, 0V; V_S = 3V, 0V; V_{CM} = V_{OUT} = half supply, unless otherwise noted. (Note 4)

SYMBOL	PARAMETER	CONDITIONS		MIN	TYP	MAX	UNITS
V_{OS}	Input Offset Voltage	V_S = 5V, 0V, V_{CM} = Half Supply					
		LT6203	●		0.2	1.3	mV
		LT6202	●		0.2	1.4	mV
		V_S = 3V, 0V, V_{CM} = Half Supply					
		LT6203	●		0.6	2.0	mV
		LT6202	●		0.6	2.2	mV
		V_S = 5V, 0V, V_{CM} = V^+ to V^-					
		LT6203	●		1.0	4.0	mV
		LT6202	●		1.0	4.3	mV
		V_S = 3V, 0V, V_{CM} = V^+ to V^-					
		LT6203	●		1.4	4.5	mV
		LT6202	●		1.4	4.7	mV
V_{OS} TC	Input Offset Voltage Drift (Note 8)	V_{CM} = Half Supply	●		3.0	9.0	µV/°C
	Input Offset Voltage Match (Channel-to-Channel) (Note 5)	V_{CM} = Half Supply	●		0.3	1.3	mV
		V_{CM} = V^- to V^+	●		0.7	3.0	mV
I_B	Input Bias Current	V_{CM} = Half Supply	●	–7.4	–1.3		µA
		V_{CM} = V^+	●		1.3	2.5	µA
		V_{CM} = V^-	●	–9.8	–3.3		µA
ΔI_B	I_B Shift	V_{CM} = V^- to V^+	●		4.7	12.3	µA
	I_B Match (Channel-to-Channel) (Note 5)		●		0.1	0.6	µA
I_{OS}	Input Offset Current	V_{CM} = Half Supply	●		0.2	1.1	µA
		V_{CM} = V^+	●		0.2	1.2	µA
		V_{CM} = V^-	●		0.2	1.3	µA
A_{VOL}	Large Signal Gain	V_S = 5V, V_O = 0.5V to 4.5V, R_L = 1k to V_S/2	●	29	60		V/mV
		V_S = 5V, V_O = 1.5V to 3.5V, R_L = 100 to V_S/2	●	3.7	10		V/mV
		V_S = 3V, V_O = 0.5V to 2.5V, R_L = 1k to V_S/2	●	12	32		V/mV
CMRR	Common Mode Rejection Ratio	V_S = 5V, V_{CM} = V^- to V^+	●	60	80		dB
		V_S = 5V, V_{CM} = 1.5V to 3.5V	●	75	95		dB
		V_S = 3V, V_{CM} = V^- to V^+	●	56	75		dB
	CMRR Match (Channel-to-Channel) (Note 5)	V_S = 5V, V_{CM} = 1.5V to 3.5V	●	80	100		dB
PSRR	Power Supply Rejection Ratio	V_S = 3V to 10V, V_{CM} = 0V	●	60	70		dB

ELECTRICAL CHARACTERISTICS

The ● denotes the specifications which apply over –40°C < T_A < 125°C temperature range. V_S = 5V, 0V; V_S = 3V, 0V; V_{CM} = V_{OUT} = half supply, unless otherwise noted. (Note 4)

SYMBOL	PARAMETER	CONDITIONS		MIN	TYP	MAX	UNITS
	PSRR Match (Channel-to-Channel) (Note 5)	V_S = 3V to 10V, V_{CM} = 0V	●	70	100		dB
	Minimum Supply Voltage (Note 6)		●	3.0			V
V_{OL}	Output Voltage Swing LOW Saturation (Note 7)	No Load I_{SINK} = 5mA I_{SINK} = 15mA	● ● ●		6 95 210	70 220 420	mV mV mV
V_{OH}	Output Voltage Swing HIGH Saturation (Note 7)	No Load I_{SOURCE} = 5mA V_S = 5V, I_{SOURCE} = 15mA V_S = 3V, I_{SOURCE} = 15mA	● ● ● ●		55 125 370 270	130 255 650 670	mV mV mV mV
I_{SC}	Short-Circuit Current	V_S = 5V V_S = 3V	● ●	±15 ±15	±25 ±23		mA mA
I_S	Supply Current per Amp	V_S = 5V V_S = 3V	● ●		3.3 3.0	4.8 4.2	mA mA
GBW	Gain Bandwidth Product	Frequency = 1MHz	●		83		MHz
SR	Slew Rate	V_S = 5V, A_V = –1, R_L = 1k, V_O = 4V	●	12	17		V/µs
FPBW	Full Power Bandwidth (Note 9)	V_S = 5V, V_{OUT} = $3V_{P-P}$	●	1.3	1.8		MHz

T_A = 25°C, V_S = ±5V; V_{CM} = V_{OUT} = 0V, unless otherwise noted.

SYMBOL	PARAMETER	CONDITIONS	MIN	TYP	MAX	UNITS
V_{OS}	Input Offset Voltage	LT6203, LT6204, LT6202S8 V_{CM} = 0V V_{CM} = V^+ V_{CM} = V^-		 1.0 2.6 2.3	 2.5 5.5 5.0	 mV mV mV
		LT6202 SOT-23 V_{CM} = 0V V_{CM} = V^+ V_{CM} = V^-		 1.0 2.6 2.3	 2.7 6.0 5.5	 mV mV mV
	Input Offset Voltage Match (Channel-to-Channel) (Note 5)	V_{CM} = 0V V_{CM} = V^- to V^+		0.2 0.4	1.0 2.0	mV mV
I_B	Input Bias Current	V_{CM} = Half Supply V_{CM} = V^+ V_{CM} = V^-	–7.0 –9.5	–1.3 1.3 –3.8	 3.0 	µA µA µA
ΔI_B	I_B Shift	V_{CM} = V^- to V^+		5.3	12.5	µA
	I_B Match (Channel-to-Channel) (Note 5)			0.1	0.6	µA
I_{OS}	Input Offset Current	V_{CM} = Half Supply V_{CM} = V^+ V_{CM} = V^-		0.15 0.2 0.35	1 1.2 1.3	µA µA µA
	Input Noise Voltage	0.1Hz to 10Hz		800		nV_{P-P}
e_n	Input Noise Voltage Density	f = 100kHz f = 10kHz		1.9 2.8	 4.5	nV/√Hz nV/√Hz
i_n	Input Noise Current Density, Balanced Input Noise Current Density, Unbalanced	f = 10kHz		0.75 1.1		pA/√Hz pA/√Hz
	Input Resistance	Common Mode Differential Mode		4 12		MΩ kΩ
C_{IN}	Input Capacitance	Common Mode Differential Mode		1.8 1.5		pF pF
A_{VOL}	Large Signal Gain	V_O = ±4.5V, R_L = 1k V_O = ±2.5V, R_L = 100	75 11	130 19		V/mV V/mV

ELECTRICAL CHARACTERISTICS

$T_A = 25°C$, $V_S = ±5V$; $V_{CM} = V_{OUT} = 0V$, unless otherwise noted.

SYMBOL	PARAMETER	CONDITIONS	MIN	TYP	MAX	UNITS
CMRR	Common Mode Rejection Ratio	$V_{CM} = V^-$ to V^+ $V_{CM} = –2V$ to 2V	65 85	85 98		dB dB
	CMRR Match (Channel-to-Channel) (Note 5)	$V_{CM} = –2V$ to 2V	85	120		dB
PSRR	Power Supply Rejection Ratio	$V_S = ±1.25V$ to ±5V	60	74		dB
	PSRR Match (Channel-to-Channel) (Note 5)	$V_S = ±1.25V$ to ±5V	70	100		dB
V_{OL}	Output Voltage Swing LOW Saturation (Note 7)	No Load $I_{SINK} = 5mA$ $I_{SINK} = 20mA$		5 87 245	50 190 460	mV mV mV
V_{OH}	Output Voltage Swing HIGH Saturation (Note 7)	No Load $I_{SOURCE} = 5mA$ $I_{SOURCE} = 20mA$		40 95 320	95 210 600	mV mV mV
I_{SC}	Short-Circuit Current		±30	±40		mA
I_S	Supply Current per Amp			2.8	3.5	mA
GBW	Gain Bandwidth Product	Frequency = 1MHz	70	100		MHz
SR	Slew Rate	$A_V = –1$, $R_L = 1k$, $V_O = 4V$	18	25		V/µs
FPBW	Full Power Bandwidth (Note 9)	$V_{OUT} = 3V_{P-P}$	1.9	2.6		MHz
t_S	Settling Time	0.1%, $V_{STEP} = 2V$, $A_V = –1$, $R_L = 1k$		78		ns
dG	Differential Gain (Note 10)	$A_V = 2$, $R_F = R_G = 499Ω$, $R_L = 2k$		0.05		%
dP	Differential Phase (Note 10)	$A_V = 2$, $R_F = R_G = 499Ω$, $R_L = 2k$		0.03		DEG

The ● denotes the specifications which apply over $0°C < T_A < 70°C$ temperature range. $V_S = ±5V$; $V_{CM} = V_{OUT} = 0V$, unless otherwise noted.

SYMBOL	PARAMETER	CONDITIONS		MIN	TYP	MAX	UNITS
V_{OS}	Input Offset Voltage	LT6203, LT6204, LT6202S8					
		$V_{CM} = 0V$	●		1.6	2.8	mV
		$V_{CM} = V^+$	●		3.2	6.8	mV
		$V_{CM} = V^-$	●		2.8	5.8	mV
		LT6202 SOT-23					
		$V_{CM} = 0V$	●		1.6	3.0	mV
		$V_{CM} = V^+$	●		3.2	7.3	mV
		$V_{CM} = V^-$	●		2.8	6.3	mV
V_{OS} TC	Input Offset Voltage Drift (Note 8)	V_{CM} = Half Supply	●		7.5	24	µV/°C
	Input Offset Voltage Match (Channel-to-Channel) (Note 5)	$V_{CM} = 0V$ $V_{CM} = V^-$ to V^+	● ●		0.2 0.5	1.0 2.2	mV mV
I_B	Input Bias Current	V_{CM} = Half Supply $V_{CM} = V^+$ $V_{CM} = V^-$	● ● ●	–7.0 –10	–1.4 1.8 –4.3	 3.6 	µA µA µA
$ΔI_B$	I_B Shift	$V_{CM} = V^-$ to V^+	●		5.4	13	µA
	I_B Match (Channel-to-Channel) (Note 5)		●		0.15	0.7	µA
I_{OS}	Input Offset Current	V_{CM} = Half Supply $V_{CM} = V^+$ $V_{CM} = V^-$	● ● ●		0.1 0.2 0.4	1 1.2 1.4	µA µA µA
A_{VOL}	Large Signal Gain	$V_O = ±4.5V$, $R_L = 1k$ $V_O = ±2V$, $R_L = 100$	● ●	70 10	120 18		V/mV V/mV
CMRR	Common Mode Rejection Ratio	$V_{CM} = V^-$ to V^+ $V_{CM} = –2V$ to 2V	● ●	65 83	84 95		dB dB
	CMRR Match (Channel-to-Channel) (Note 5)	$V_{CM} = –2V$ to 2V	●	83	110		dB

ELECTRICAL CHARACTERISTICS

The ● denotes the specifications which apply over 0°C < T_A < 70°C temperature range. V_S = ±5V; V_{CM} = V_{OUT} = 0V, unless otherwise noted.

SYMBOL	PARAMETER	CONDITIONS		MIN	TYP	MAX	UNITS
PSRR	Power Supply Rejection Ratio	V_S = ±1.5V to ±5V	●	60	70		dB
	PSRR Match (Channel-to-Channel) (Note 5)	V_S = ±1.5V to ±5V	●	70	100		dB
V_{OL}	Output Voltage Swing LOW Saturation (Note 7)	No Load I_{SINK} = 5mA I_{SINK} = 15mA	● ● ●		6 95 210	70 200 400	mV mV mV
V_{OH}	Output Voltage Swing HIGH Saturation (Note 7)	No Load I_{SOURCE} = 5mA I_{SOURCE} = 20mA	● ● ●		65 125 350	120 240 625	mV mV mV
I_{SC}	Short-Circuit Current		●	±25	±34		mA
I_S	Supply Current per Amp		●		3.5	4.3	mA
GBW	Gain Bandwidth Product	Frequency = 1MHz	●		95		MHz
SR	Slew Rate	A_V = –1, R_L = 1k, V_O = 4V	●	16	22		V/µs
FPBW	Full Power Bandwidth (Note 9)	V_{OUT} = $3V_{P-P}$	●	1.7	2.3		MHz

The ● denotes the specifications which apply over –40°C < T_A < 85°C temperature range. V_S = ±5V; V_{CM} = V_{OUT} = 0V, unless otherwise noted. (Note 4)

SYMBOL	PARAMETER	CONDITIONS		MIN	TYP	MAX	UNITS
V_{OS}	Input Offset Voltage	LT6203, LT6204, LT6202S8 V_{CM} = 0V V_{CM} = V^+ V_{CM} = V^-	 ● ● ●		 1.7 3.8 3.5	 3.0 7.5 6.6	 mV mV mV
		LT6202 SOT-23 V_{CM} = 0V V_{CM} = V^+ V_{CM} = V^-	 ● ● ●		 1.7 3.8 3.5	 3.2 7.7 6.7	 mV mV mV
V_{OS} TC	Input Offset Voltage Drift (Note 8)	V_{CM} = Half Supply	●		7.5	24	µV/°C
	Input Offset Voltage Match (Channel-to-Channel) (Note 5)	V_{CM} = 0V V_{CM} = V^- to V^+	● ●		0.3 0.6	1.0 2.5	mV mV
I_B	Input Bias Current	V_{CM} = Half Supply V_{CM} = V^+ V_{CM} = V^-	● ● ●	–7.0 –10	–1.4 1.8 –4.5	 3.6 	µA µA µA
ΔI_B	I_B Shift	V_{CM} = V^- to V^+	●		5.4	13	µA
	I_B Match (Channel-to-Channel) (Note 5)		●		0.15	0.7	µA
I_{OS}	Input Offset Current	V_{CM} = Half Supply V_{CM} = V^+ V_{CM} = V^-	● ● ●		0.15 0.3 0.5	1 1.2 1.6	µA µA µA
A_{VOL}	Large Signal Gain	V_O = ±4.5V, R_L = 1k V_O = ±1.5V R_L = 100	● ●	60 6.0	110 13		V/mV V/mV
CMRR	Common Mode Rejection Ratio	V_{CM} = V^- to V^+ V_{CM} = –2V to 2V	● ●	65 80	84 95		dB dB
	CMRR Match (Channel-to-Channel) (Note 5)	V_{CM} = –2V to 2V	●	80	110		dB
PSRR	Power Supply Rejection Ratio	V_S = ±1.5V to ±5V	●	60	70		dB
	PSRR Match (Channel-to-Channel) (Note 5)	V_S = ±1.5V to ±5V	●	70	100		dB
V_{OL}	Output Voltage Swing LOW Saturation (Note 7)	No Load I_{SINK} = 5mA I_{SINK} = 15mA	● ● ●		7 98 260	75 205 500	mV mV mV

ELECTRICAL CHARACTERISTICS

The ● denotes the specifications which apply over –40°C < T_A < 85°C temperature range. V_S = ±5V; V_{CM} = V_{OUT} = 0V, unless otherwise noted. (Note 4)

SYMBOL	PARAMETER	CONDITIONS		MIN	TYP	MAX	UNITS
V_{OH}	Output Voltage Swing HIGH Saturation (Note 7)	No Load I_{SOURCE} = 5mA I_{SOURCE} = 15mA	● ● ●		70 130 360	130 250 640	mV mV mV
I_{SC}	Short-Circuit Current		●	±15	±25		mA
I_S	Supply Current per Amp		●		3.8	4.5	mA
GBW	Gain Bandwidth Product	Frequency = 1MHz	●		90		MHz
SR	Slew Rate	A_V = –1, R_L = 1k, V_O = 4V	●	13	18		V/µs
FPBW	Full Power Bandwidth (Note 9)	V_{OUT} = $3V_{P-P}$	●	1.4	1.9		MHz

The ● denotes the specifications which apply over –40°C < T_A < 125°C temperature range. V_S = ±5V; V_{CM} = V_{OUT} = 0V, unless otherwise noted. (Note 4)

SYMBOL	PARAMETER	CONDITIONS		MIN	TYP	MAX	UNITS
V_{OS}	Input Offset Voltage	LT6203 V_{CM} = 0V V_{CM} = V^+ V_{CM} = V^-	 ● ● ●		 1.7 3.8 3.5	 3.7 9.1 7.6	 mV mV mV
		LT6202 V_{CM} = 0V V_{CM} = V^+ V_{CM} = V^-	 ● ● ●		 1.7 3.8 3.5	 3.2 9.0 7.5	 mV mV mV
V_{OS} TC	Input Offset Voltage Drift (Note 8)	V_{CM} = Half Supply	●		7.5	24	µV/°C
	Input Offset Voltage Match (Channel-to-Channel) (Note 5)	V_{CM} = 0V V_{CM} = V^- to V^+	● ●		0.3 0.6	1.2 3.0	mV mV
I_B	Input Bias Current	V_{CM} = Half Supply V_{CM} = V^+ V_{CM} = V^-	● ● ●	–7.3 –11.1	–1.4 1.8 –4.5	 4.0 	µA µA µA
ΔI_B	I_B Shift	V_{CM} = V^- to V^+	●		5.4	15	µA
	I_B Match (Channel-to-Channel) (Note 5)		●		0.15	0.7	µA
I_{OS}	Input Offset Current	V_{CM} = Half Supply V_{CM} = V^+ V_{CM} = V^-	● ● ●		0.15 0.3 0.5	1.1 1.3 1.6	µA µA µA
A_{VOL}	Large Signal Gain	V_O = ±4.5V, R_L = 1k V_O = ±1.5V R_L = 100	● ●	54 5.7	110 13		V/mV V/mV
CMRR	Common Mode Rejection Ratio	V_{CM} = V^- to V^+ V_{CM} = –2V to 2V	● ●	65 79	84 95		dB dB
	CMRR Match (Channel-to-Channel) (Note 5)	V_{CM} = –2V to 2V	●	80	110		dB
PSRR	Power Supply Rejection Ratio	V_S = ±1.5V to ±5V	●	60	70		dB
	PSRR Match (Channel-to-Channel) (Note 5)	V_S = ±1.5V to ±5V	●	70	100		dB
V_{OL}	Output Voltage Swing LOW Saturation (Note 7)	No Load I_{SINK} = 5mA I_{SINK} = 15mA	● ● ●		7 98 260	75 215 500	mV mV mV
V_{OH}	Output Voltage Swing HIGH Saturation (Note 7)	No Load I_{SOURCE} = 5mA I_{SOURCE} = 15mA	● ● ●		70 130 360	150 270 640	mV mV mV
I_{SC}	Short-Circuit Current		●	±15	±25		mA

ELECTRICAL CHARACTERISTICS

The ● denotes the specifications which apply over –40°C < T_A < 125°C temperature range. V_S = ±5V; V_{CM} = V_{OUT} = 0V, unless otherwise noted. (Note 4)

SYMBOL	PARAMETER	CONDITIONS		MIN	TYP	MAX	UNITS
I_S	Supply Current per Amp		●		3.8	5.3	mA
GBW	Gain Bandwidth Product	Frequency = 1MHz	●		90		MHz
SR	Slew Rate	A_V = –1, R_L = 1k, V_O = 4V	●	13	18		V/µs
FPBW	Full Power Bandwidth (Note 9)	V_{OUT} = $3V_{P-P}$	●	1.4	1.9		MHz

Note 1: Stresses beyond those listed under Absolute Maximum Ratings may cause permanent damage to the device. Exposure to any Absolute Maximum Rating condition for extended periods may affect device reliability and lifetime.

Note 2: Inputs are protected by back-to-back diodes and diodes to each supply. If the inputs are taken beyond the supplies or the differential input voltage exceeds 0.7V, the input current must be limited to less than 40mA.

Note 3: A heat sink may be required to keep the junction temperature below the absolute maximum rating when the output is shorted indefinitely.

Note 4: The LT6202C/LT6203C/LT6204C are guaranteed to meet specified performance from 0°C to 70°C. The LT6202C/LT6203C/LT6204C are designed, characterized and expected to meet specified performance from –40°C to 85°C, but are not tested or QA sampled at these temperatures.

The LT6202I/LT6203I/LT6204I are guaranteed to meet specified performance from –40°C to 85°C. The LT6202H and LT6203H are guaranteed to meet specified performance from –40°C to 125°C.

Note 5: Matching parameters are the difference between the two amplifiers A and D and between B and C of the LT6204; between the two amplifiers of the LT6203. CMRR and PSRR match are defined as follows: CMRR and PSRR are measured in µV/V on the identical amplifiers. The difference is calculated between the matching sides in µV/V. The result is converted to dB.

Note 6: Minimum supply voltage is guaranteed by power supply rejection ratio test.

Note 7: Output voltage swings are measured between the output and power supply rails.

Note 8: This parameter is not 100% tested.

Note 9: Full-power bandwidth is calculated from the slew rate:
FPBW = $SR/2\pi V_P$

Note 10: Differential gain and phase are measured using a Tektronix TSG120YC/NTSC signal generator and a Tektronix 1780R Video Measurement Set. The resolution of this equipment is 0.1% and 0.1°. Ten identical amplifier stages were cascaded giving an effective resolution of 0.01% and 0.01°.

TYPICAL PERFORMANCE CHARACTERISTICS

V_{OS} Distribution, $V_{CM} = V^+/2$

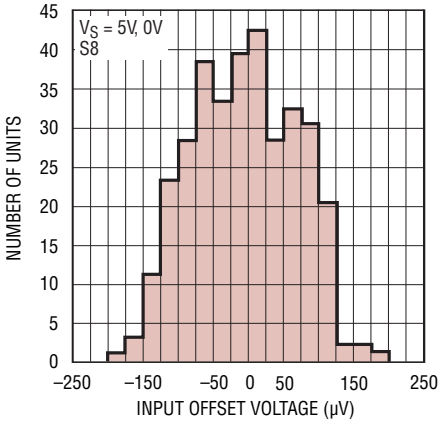

V_{OS} Distribution, $V_{CM} = V^+$

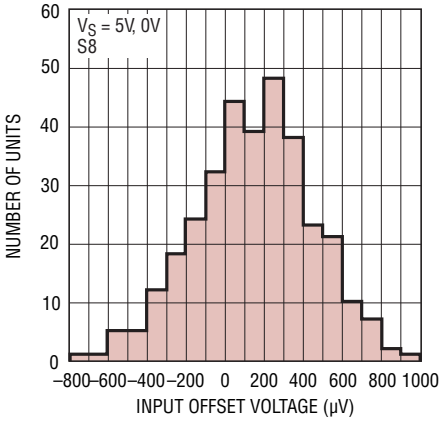

V_{OS} Distribution, $V_{CM} = V^-$

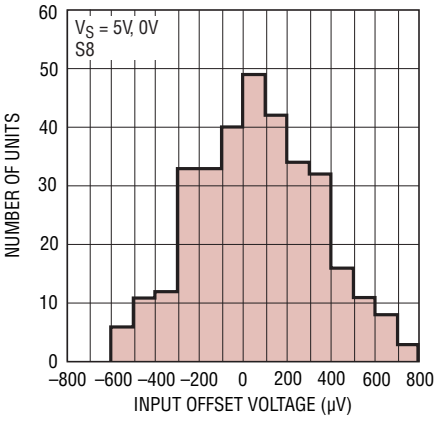

Supply Current vs Supply Voltage (Both Amplifiers)

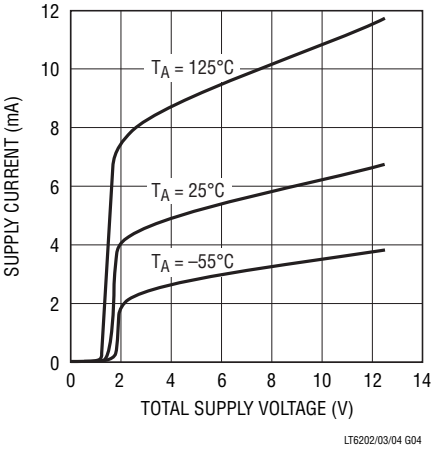

Offset Voltage vs Input Common Mode Voltage

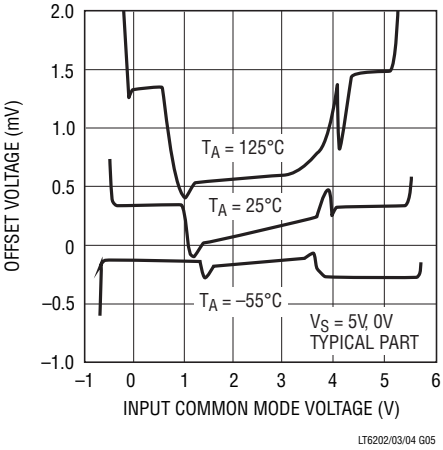

Input Bias Current vs Common Mode Voltage

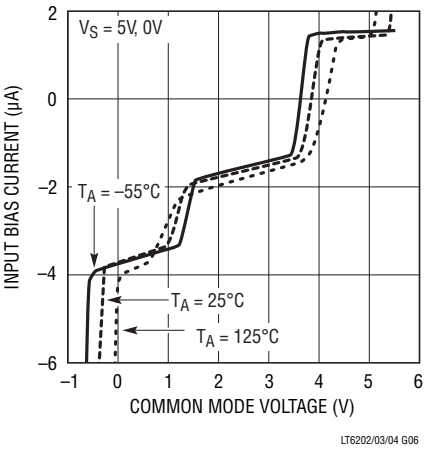

Input Bias Current vs Temperature

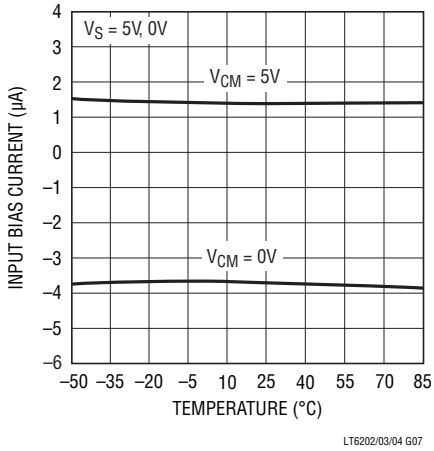

Output Saturation Voltage vs Load Current (Output Low)

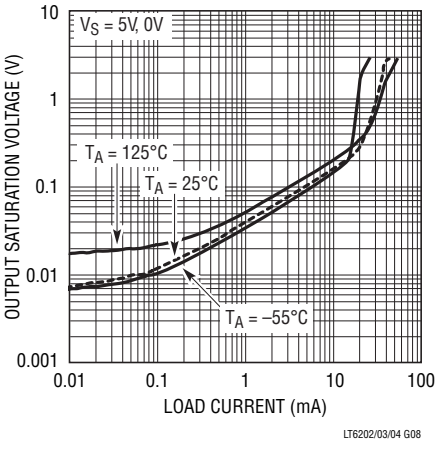

Output Saturation Voltage vs Load Current (Output High)

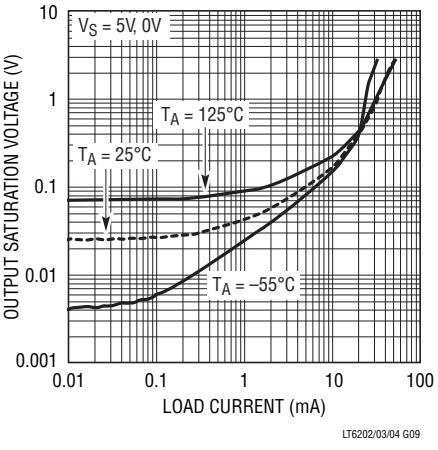

TYPICAL PERFORMANCE CHARACTERISTICS

Minimum Supply Voltage

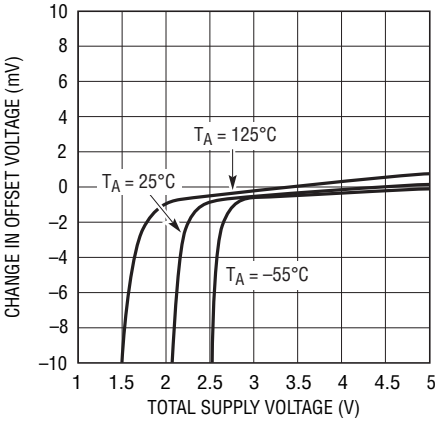

Output Short-Circuit Current vs Power Supply Voltage

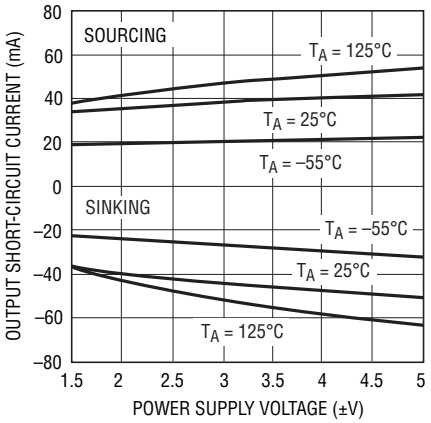

Open-Loop Gain

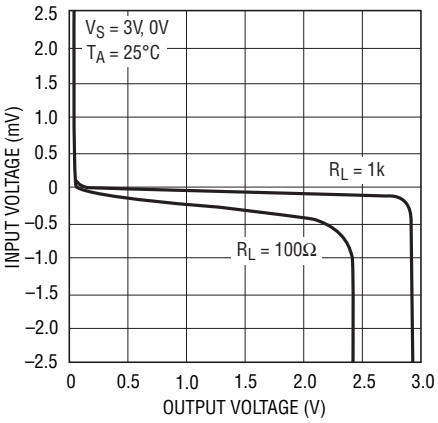

Open-Loop Gain

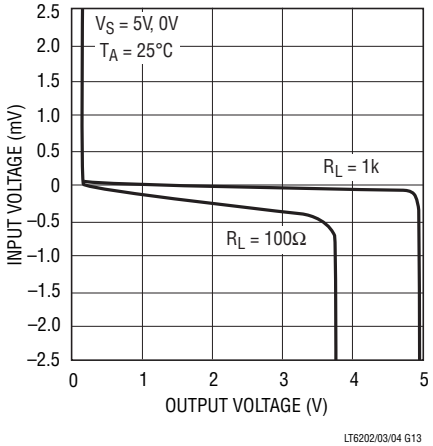

Open-Loop Gain

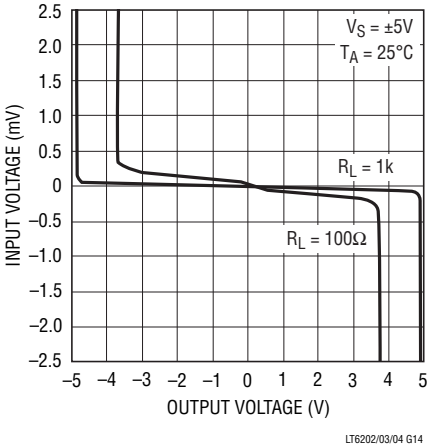

Offset Voltage vs Output Current

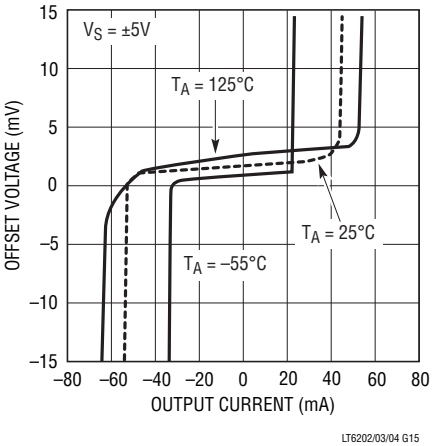

Warm-Up Drift vs Time (LT6203S8)

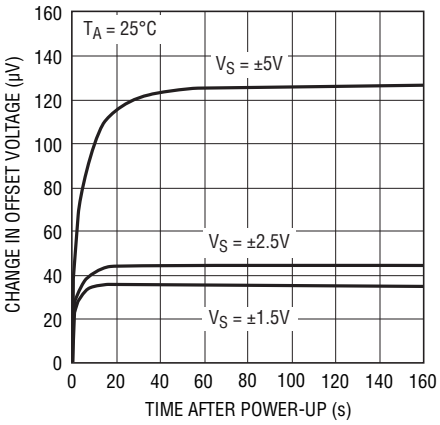

Total Noise vs Total Source Resistance

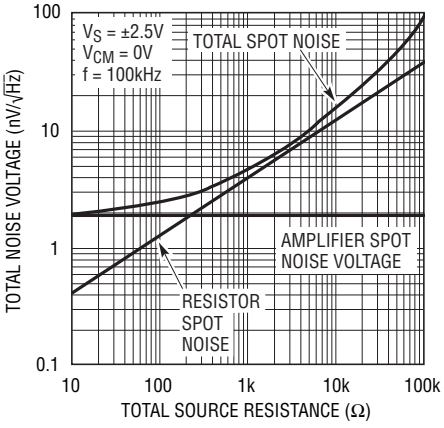

Input Noise Voltage vs Frequency

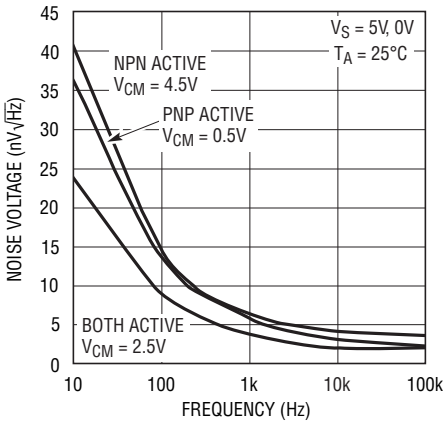

TYPICAL PERFORMANCE CHARACTERISTICS

Balanced Noise Current vs Frequency

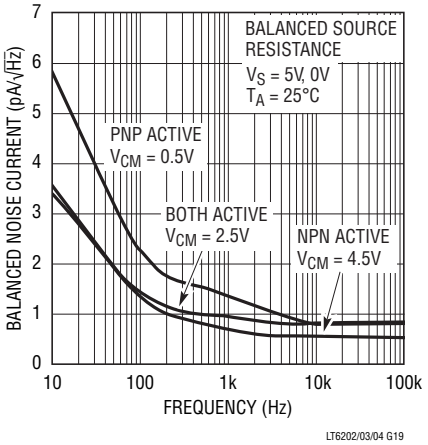

Unbalanced Noise Current vs Frequency

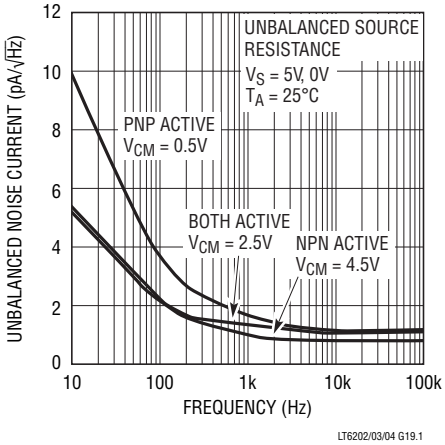

0.1Hz to 10Hz Output Voltage Noise

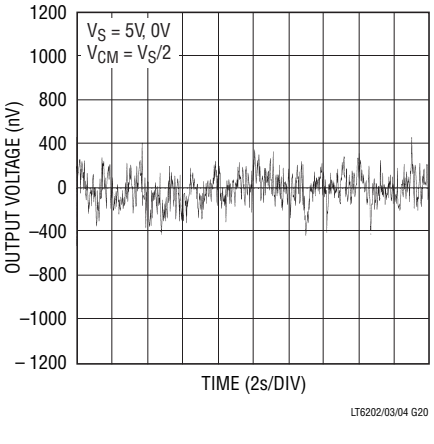

Gain Bandwidth and Phase Margin vs Temperature

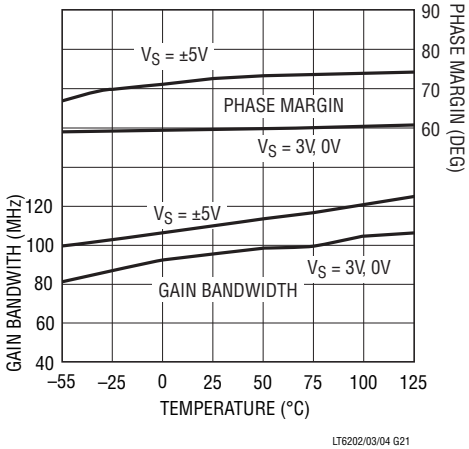

Open-Loop Gain vs Frequency

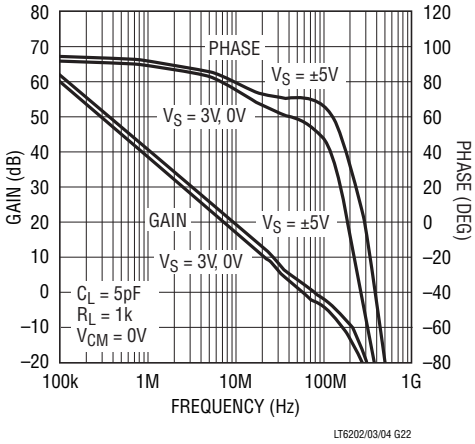

Open-Loop Gain vs Frequency

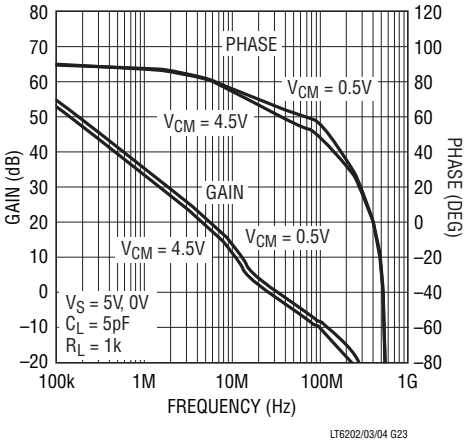

Gain Bandwidth and Phase Margin vs Supply Voltage

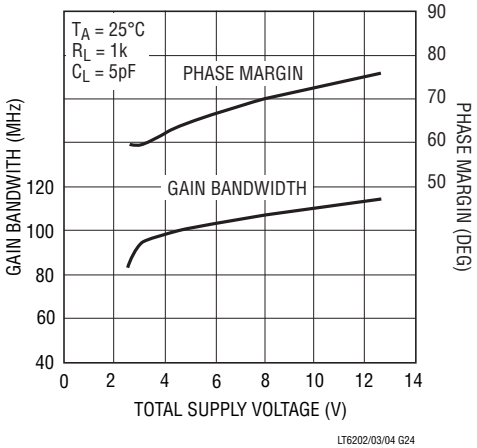

Slew Rate vs Temperature

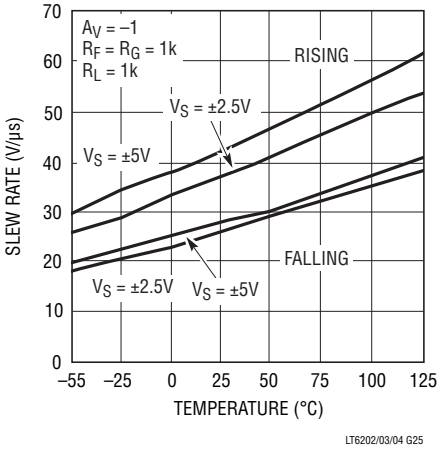

Output Impedance vs Frequency

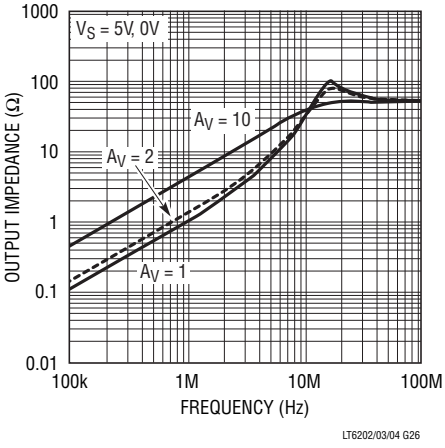

TYPICAL PERFORMANCE CHARACTERISTICS

Common Mode Rejection Ratio vs Frequency

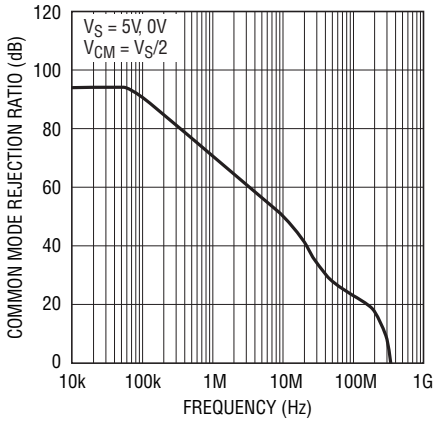

LT6202/03/04 G27

Channel Separation vs Frequency

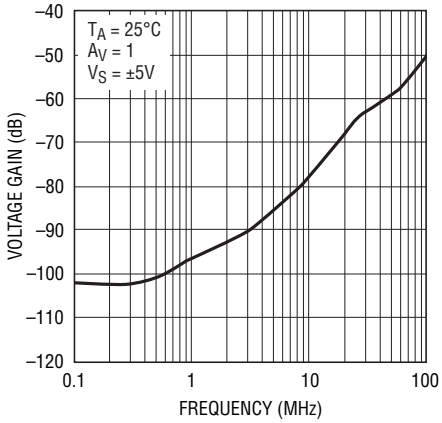

LT6202/03/04 G27.1

Power Supply Rejection Ratio vs Frequency

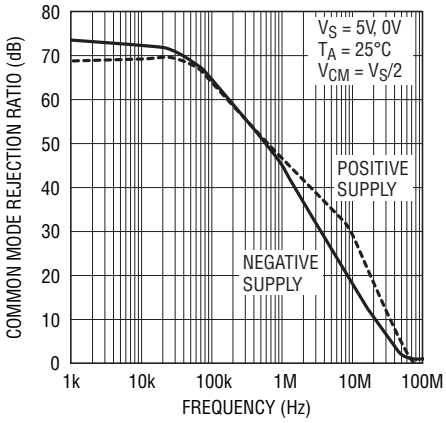

LT6202/03/04 G28

Series Output Resistor vs Capacitive Load

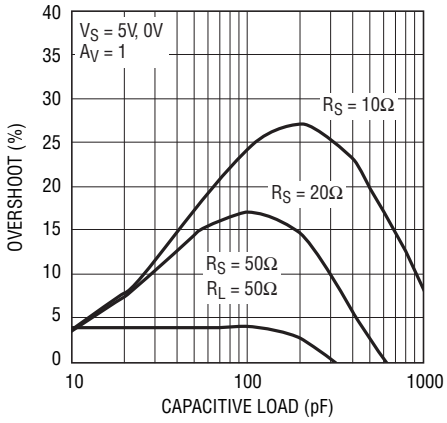

LT6202/03/04 G29

Series Output Resistor vs Capacitive Load

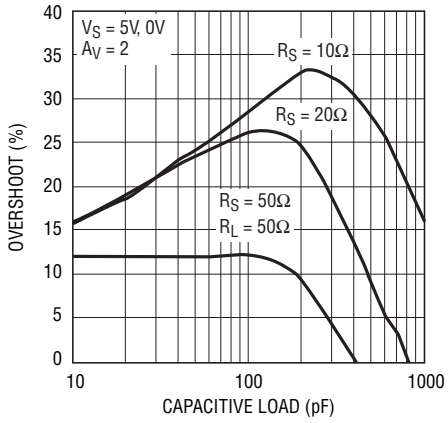

LT6202/03/04 G30

Settling Time vs Output Step (Noninverting)

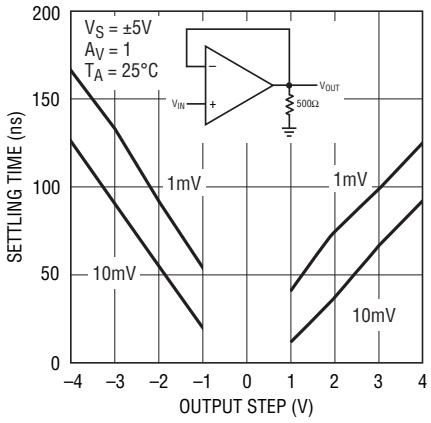

LT6202/03/04 G31

Settling Time vs Output Step (Inverting)

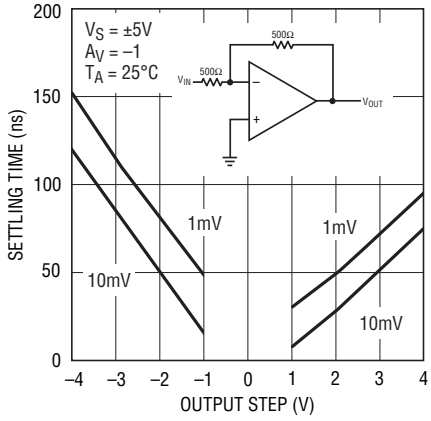

LT6202/03/04 G32

Maximum Undistorted Output Signal vs Frequency

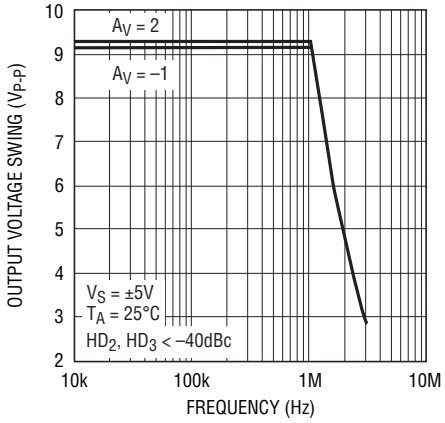

LT6202/03/04 G33

Distortion vs Frequency

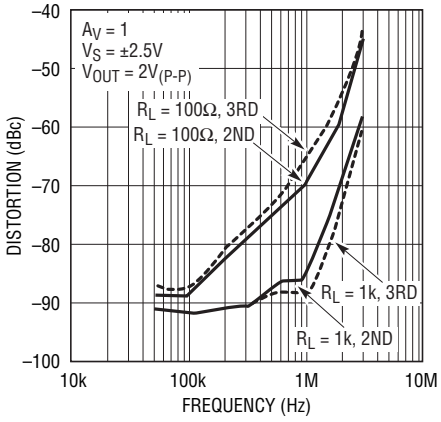

LT6202/03/04 G34

TYPICAL PERFORMANCE CHARACTERISTICS

Distortion vs Frequency

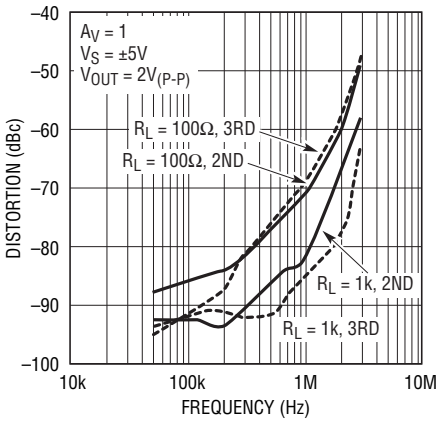

LT6202/03/04 G35

Distortion vs Frequency

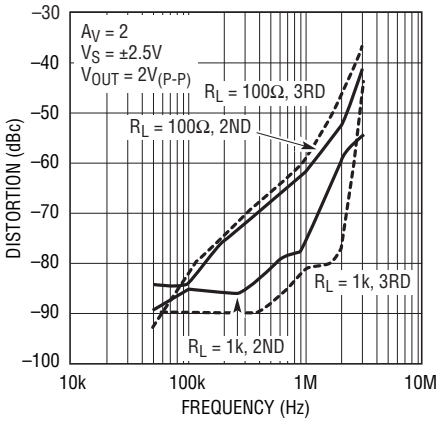

LT6202/03/04 G36

Distortion vs Frequency

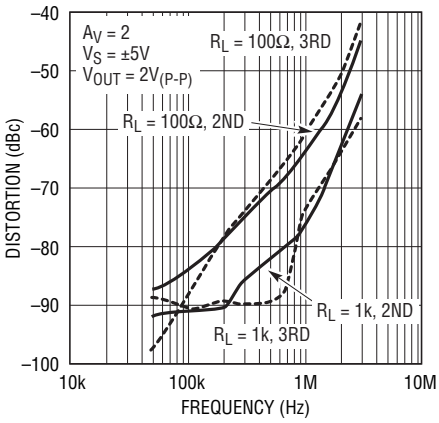

LT6202/03/04 G37

5V Large-Signal Response

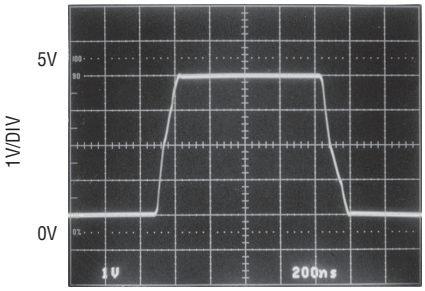

200ns/DIV

V_S = 5V, 0V
A_V = 1
R_L = 1k

LT6202/03/04 G38

5V Small-Signal Response

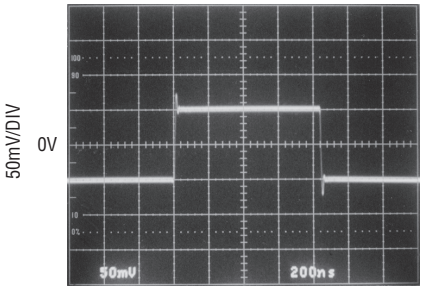

200ns/DIV

V_S = 5V, 0V
A_V = 1
R_L = 1k

LT6202/03/04 G39

±5V Large-Signal Response

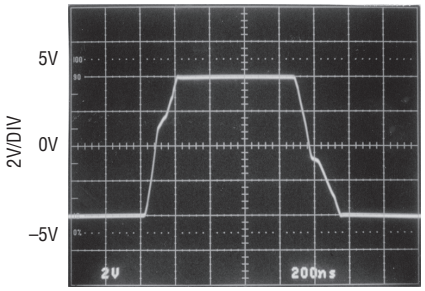

200ns/DIV

V_S = ±5V
A_V = 1
R_L = 1k

LT6202/03/04 G40

Output-Overdrive Recovery

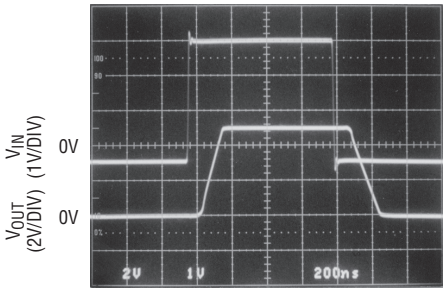

200ns/DIV

V_S = 5V, 0V
A_V = 2

LT6202/03/04 G41

APPLICATIONS INFORMATION

Amplifier Characteristics

Figure 1 shows a simplified schematic of the LT6202/LT6203/LT6204, which has two input differential amplifiers in parallel that are biased on simultaneously when the common mode voltage is at least 1.5V from either rail. This topology allows the input stage to swing from the positive supply voltage to the negative supply voltage. As the common mode voltage swings beyond V_{CC} – 1.5V, current source I_1 saturates and current in Q1/Q4 is zero. Feedback is maintained through the Q2/Q3 differential amplifier, but with an input g_m reduction of 1/2. A similar effect occurs with I_2 when the common mode voltage swings within 1.5V of the negative rail. The effect of the g_m reduction is a shift in the V_{OS} as I_1 or I_2 saturate.

Input bias current normally flows out of the + and – inputs. The magnitude of this current increases when the input common mode voltage is within 1.5V of the negative rail, and only Q1/Q4 are active. The polarity of this current reverses when the input common mode voltage is within 1.5V of the positive rail and only Q2/Q3 are active.

The second stage is a folded cascode and current mirror that converts the input stage differential signals to a single ended output. Capacitor C1 reduces the unity cross frequency and improves the frequency stability without degrading the gain bandwidth of the amplifier. The differential drive generator supplies current to the output transistors that swing from rail-to-rail.

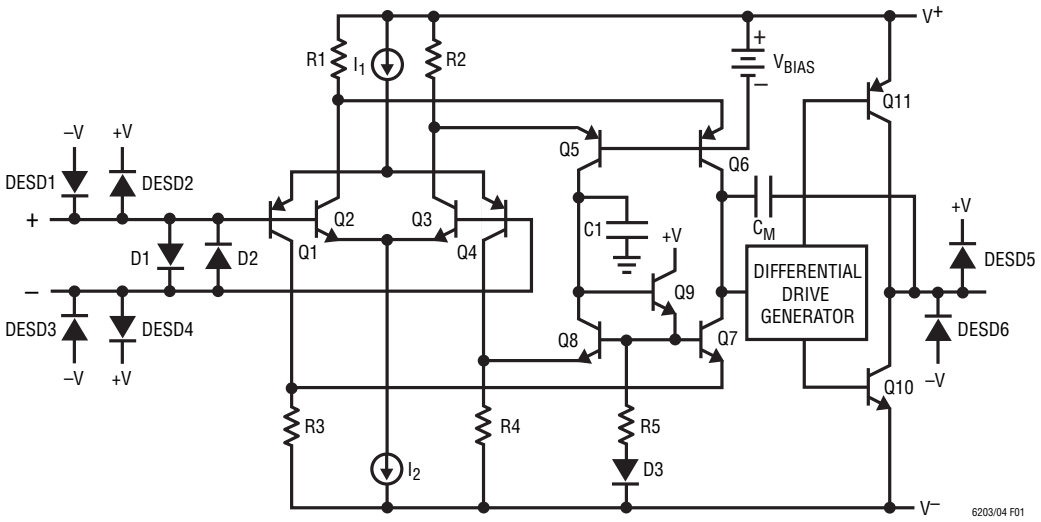

Figure 1. Simplified Schematic

APPLICATIONS INFORMATION

Input Protection

There are back-to-back diodes, D1 and D2, across the + and – inputs of these amplifiers to limit the differential input voltage to ±0.7V. The inputs of the LT6202/LT6203/LT6304 do not have internal resistors in series with the input transistors. This technique is often used to protect the input devices from over voltage that causes excessive currents to flow. The addition of these resistors would significantly degrade the low noise voltage of these amplifiers. For instance, a 100Ω resistor in series with each input would generate 1.8nV/$\sqrt{Hz}$ of noise, and the total amplifier noise voltage would rise from 1.9nV/$\sqrt{Hz}$ to 2.6nV/$\sqrt{Hz}$. Once the input differential voltage exceeds ±0.7V, steady state current conducted though the protection diodes should be limited to ±40mA. This implies 25Ω of protection resistance per volt of continuous overdrive beyond ±0.7V. The input diodes are rugged enough to handle transient currents due to amplifier slew rate overdrive or momentary clipping without these resistors.

Figure 2 shows the input and output waveforms of the amplifier driven into clipping while connected in a gain of A_V = 1. When the input signal goes sufficiently beyond the power supply rails, the input transistors will saturate. When saturation occurs, the amplifier loses a stage of phase inversion and the output tries to change states. Diodes D1 and D2 forward bias and hold the output within a diode drop of the input signal. In this photo, the input signal generator is clipping at ±35mA, and the output transistors supply this generator current through the protection diodes.

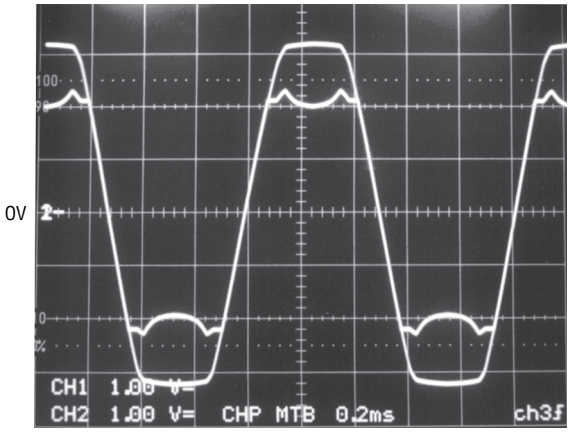

Figure 2. V_S = ±2.5V, A_V = 1 with Large Overdrive

With the amplifier connected in a gain of $A_V \geq 2$, the output can invert with very heavy input overdrive. To avoid this inversion, limit the input overdrive to 0.5V beyond the power supply rails.

ESD

The LT6202/LT6203/LT6204 have reverse-biased ESD protection diodes on all inputs and outputs as shown in Figure 1. If these pins are forced beyond either supply, unlimited current will flow through these diodes. If the current is transient and limited to one hundred milliamps or less, no damage to the device will occur.

Noise

The noise voltage of the LT6202/LT6203/LT6204 is equivalent to that of a 225Ω resistor, and for the lowest possible noise it is desirable to keep the source and feedback resistance at or below this value, i.e. $R_S + R_G||R_{FB} \leq 225\Omega$. With $R_S + R_G||R_{FB} = 225\Omega$ the total noise of the amplifier is: $e_n = \sqrt{(1.9nV)^2+(1.9nV)^2} = 2.7nV$. Below this resistance value, the amplifier dominates the noise, but in the resistance region between 225Ω and approximately 10kΩ, the noise is dominated by the resistor thermal noise. As the total resistance is further increased, beyond 10k, the noise current multiplied by the total resistance eventually dominates the noise.

The product of $e_n \bullet \sqrt{I_{SUPPLY}}$ is an interesting way to gauge low noise amplifiers. Many low noise amplifiers with low e_n have high I_{SUPPLY} current. In applications that require low noise with the lowest possible supply current, this product can prove to be enlightening. The LT6202/LT6203/LT6204 have an e_n, $\sqrt{I_{SUPPLY}}$ product of 3.2 per amplifier, yet it is common to see amplifiers with similar noise specifications have an $e_n \bullet \sqrt{I_{SUPPLY}}$ product of 4.7 to 13.5.

For a complete discussion of amplifier noise, see the LT1028 data sheet.

TYPICAL APPLICATIONS

Low Noise, Low Power 1MΩ AC Photodiode Transimpedance Amplifier

Figure 3 shows the LT6202 applied as a transimpedance amplifier (TIA). The LT6202 forces the BF862 ultralow-noise JFET source to 0V, with R3 ensuring that the JFET has an I_{DRAIN} of 1mA. The JFET acts as a source follower, buffering the input of the LT6202 and making it suitable for the high impedance feedback elements R1 and R2. The BF862 has a minimum I_{DSS} of 10mA and a pinchoff voltage between –0.3V and –1.2V. The JFET gate and the LT6202 output therefore sit at a point slightly higher than one pinchoff voltage below ground (typically about –0.6V). When the photodiode is illuminated, the current must come from the LT6202's output through R1 and R2, as in a normal TIA. Amplifier input noise density and gain-bandwidth product were measured at 2.4nV/Hz and 100MHz, respectively. Note that because the JFET has a high g_m, approximately 1/80Ω, its attenuation looking into R3 is only about 2%. Gain-bandwidth product was measured at 100MHz and the closed-loop bandwidth using a 3pF photodiode was approximately 1.4MHz.

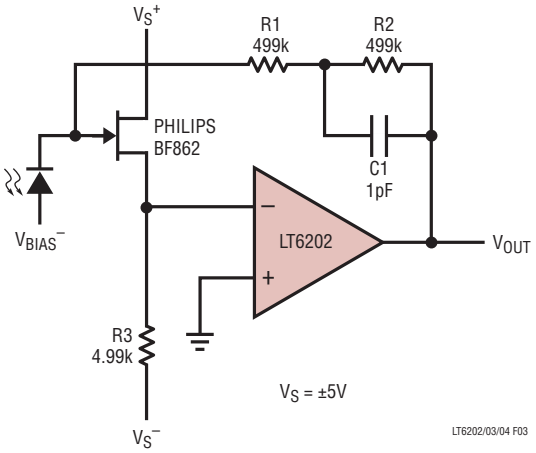

Figure 3. Low Noise, Low Power 1MΩ AC Photodiode Transimpedance Amplifier

Precision Low Noise, Low Power, 1MΩ Photodiode Transimpedance Amplifier

Figure 4 shows the LT6202 applied as a transimpedance amplifier (TIA), very similar to that shown in Figure 3. In this case, however, the JFET is not allowed to dictate the DC-bias conditions. Rather than being grounded, the LT6202's noninverting input is driven by the LTC2050 to the exact state necessary for zero JFET gate voltage. The noise performance is nearly identical to that of the circuit in Figure 3, with the additional benefit of excellent DC performance. Input offset was measured at under 200µV and output noise was within $2mV_{P-P}$ over a 20MHz bandwidth.

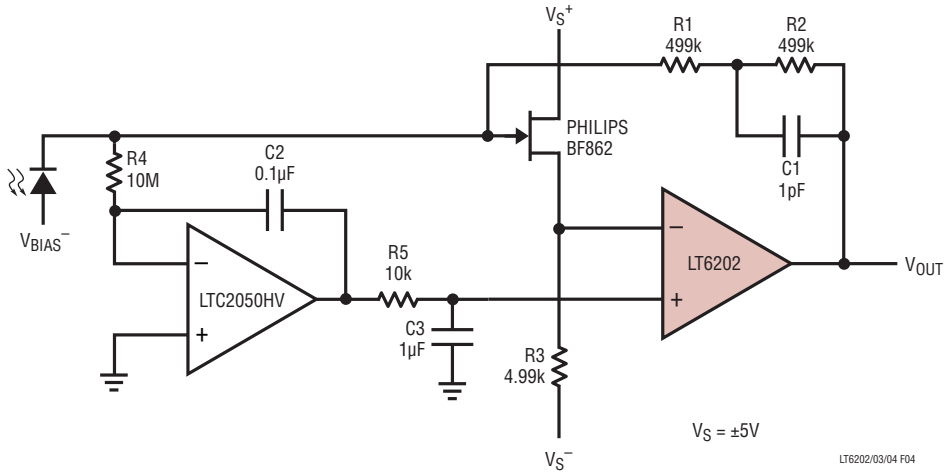

Figure 4. Precision Low Noise, Low Power Transimpedance Amplifier

TYPICAL APPLICATIONS

Single-Supply 16-Bit ADC Driver

Figure 5 shows the LT6203 driving an LTC1864 unipolar 16-bit A/D converter. The bottom half of the LT6203 is in a gain-of-one configuration and buffers the 0V negative full-scale signal V_{LOW} into the negative input of the LTC1864. The top half of the LT6203 is in a gain-of-ten configuration referenced to the buffered voltage V_{LOW} and drives the positive input of the LTC1864. The input range of the LTC1864 is 0V to 5V, but for best results the input range of V_{IN} should be from V_{LOW} (about 0.4V) to about 0.82V. Figure 6 shows an FFT obtained with a 10.1318kHz coherent input waveform, from 8192 samples with no windowing or averaging. Spurious free dynamic range is seen to be about 100dB.

Although the LTC1864 has a sample rate far below the gain bandwidth of the LT6203, using this amplifier is not necessarily a case of overkill. The designer is reminded that A/D converters have sample apertures that are vanishingly small (ideally, infinitesimally small) and make demands on the upstream circuitry far in excess of what is implied by the innocent-looking sample rate. In addition, when an A/D converter takes a sample, it applies a small capacitor to its inputs with a fair amount of glitch energy and expects the voltage on the capacitor to settle to the true value very quickly. Finally, the LTC1864 has a 20MHz analog input bandwidth and can be used in undersampling applications, again requiring a source bandwidth higher than Nyquist.

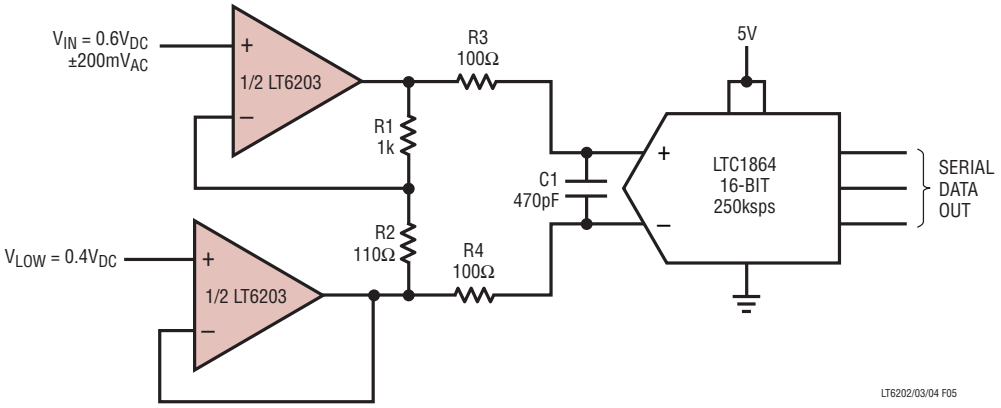

Figure 5. Single-Supply 16-Bit ADC Driver

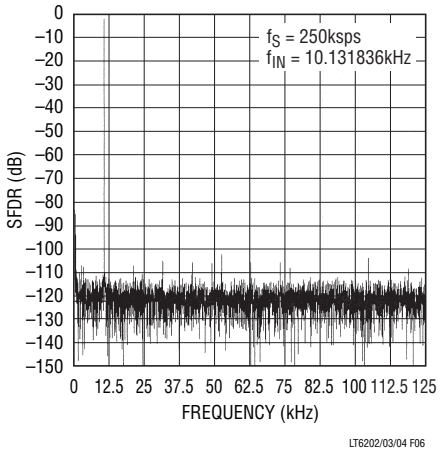

Figure 6. FFT Showing 100dB SFDR

PACKAGE DESCRIPTION

Please refer to http://www.linear.com/designtools/packaging/ for the most recent package drawings.

DD Package
8-Lead Plastic DFN (3mm × 3mm)
(Reference LTC DWG # 05-08-1698 Rev C)

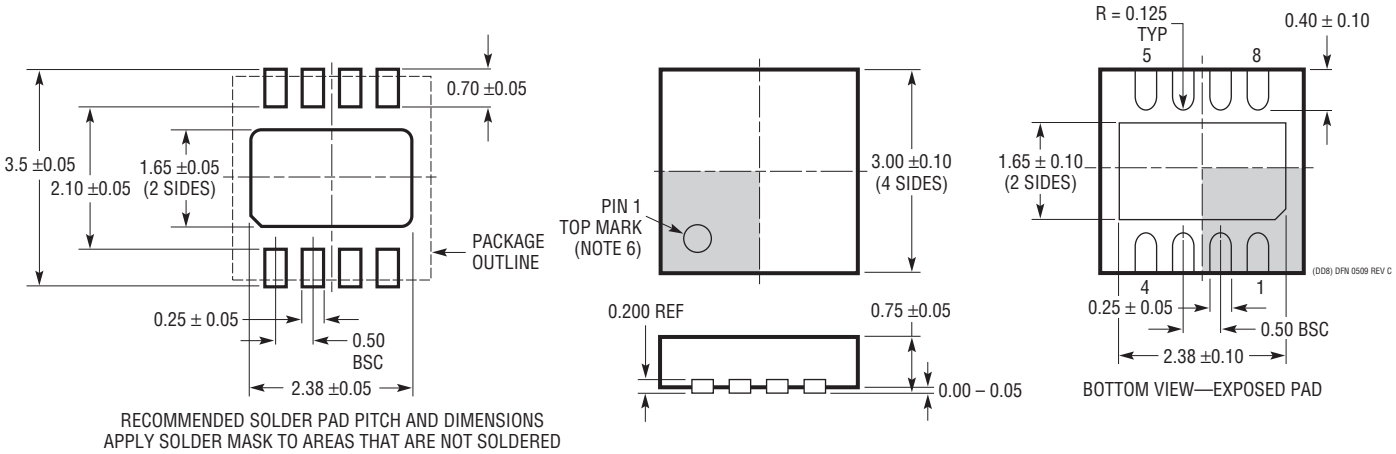

NOTE:
1. DRAWING TO BE MADE A JEDEC PACKAGE OUTLINE M0-229 VARIATION OF (WEED-1)
2. DRAWING NOT TO SCALE
3. ALL DIMENSIONS ARE IN MILLIMETERS
4. DIMENSIONS OF EXPOSED PAD ON BOTTOM OF PACKAGE DO NOT INCLUDE MOLD FLASH. MOLD FLASH, IF PRESENT, SHALL NOT EXCEED 0.15mm ON ANY SIDE
5. EXPOSED PAD SHALL BE SOLDER PLATED
6. SHADED AREA IS ONLY A REFERENCE FOR PIN 1 LOCATION ON TOP AND BOTTOM OF PACKAGE

GN Package
16-Lead Plastic SSOP (Narrow .150 Inch)
(Reference LTC DWG # 05-08-1641)

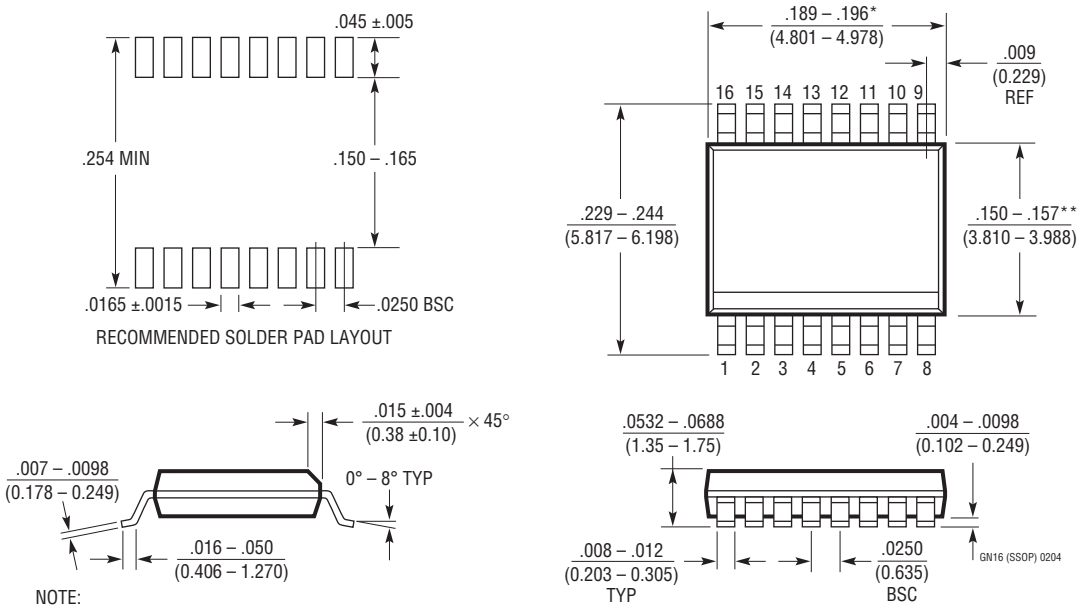

NOTE:
1. CONTROLLING DIMENSION: INCHES
2. DIMENSIONS ARE IN $\frac{\text{INCHES}}{\text{(MILLIMETERS)}}$
3. DRAWING NOT TO SCALE

*DIMENSION DOES NOT INCLUDE MOLD FLASH. MOLD FLASH SHALL NOT EXCEED 0.006" (0.152mm) PER SIDE

**DIMENSION DOES NOT INCLUDE INTERLEAD FLASH. INTERLEAD FLASH SHALL NOT EXCEED 0.010" (0.254mm) PER SIDE

PACKAGE DESCRIPTION

Please refer to http://www.linear.com/designtools/packaging/ for the most recent package drawings.

MS8 Package
8-Lead Plastic MSOP
(Reference LTC DWG # 05-08-1660 Rev F)

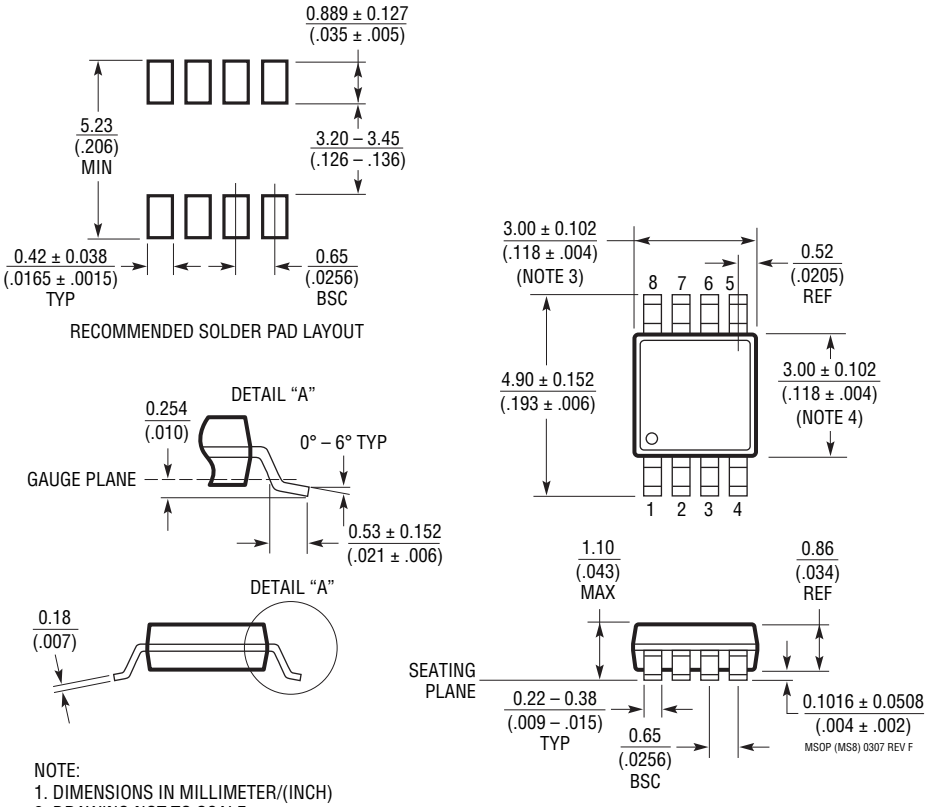

NOTE:
1. DIMENSIONS IN MILLIMETER/(INCH)
2. DRAWING NOT TO SCALE
3. DIMENSION DOES NOT INCLUDE MOLD FLASH, PROTRUSIONS OR GATE BURRS.
   MOLD FLASH, PROTRUSIONS OR GATE BURRS SHALL NOT EXCEED 0.152mm (.006") PER SIDE
4. DIMENSION DOES NOT INCLUDE INTERLEAD FLASH OR PROTRUSIONS.
   INTERLEAD FLASH OR PROTRUSIONS SHALL NOT EXCEED 0.152mm (.006") PER SIDE
5. LEAD COPLANARITY (BOTTOM OF LEADS AFTER FORMING) SHALL BE 0.102mm (.004") MAX

PACKAGE DESCRIPTION

Please refer to http://www.linear.com/designtools/packaging/ for the most recent package drawings.

S8 Package
8-Lead Plastic Small Outline (Narrow .150 Inch)
(Reference LTC DWG # 05-08-1610)

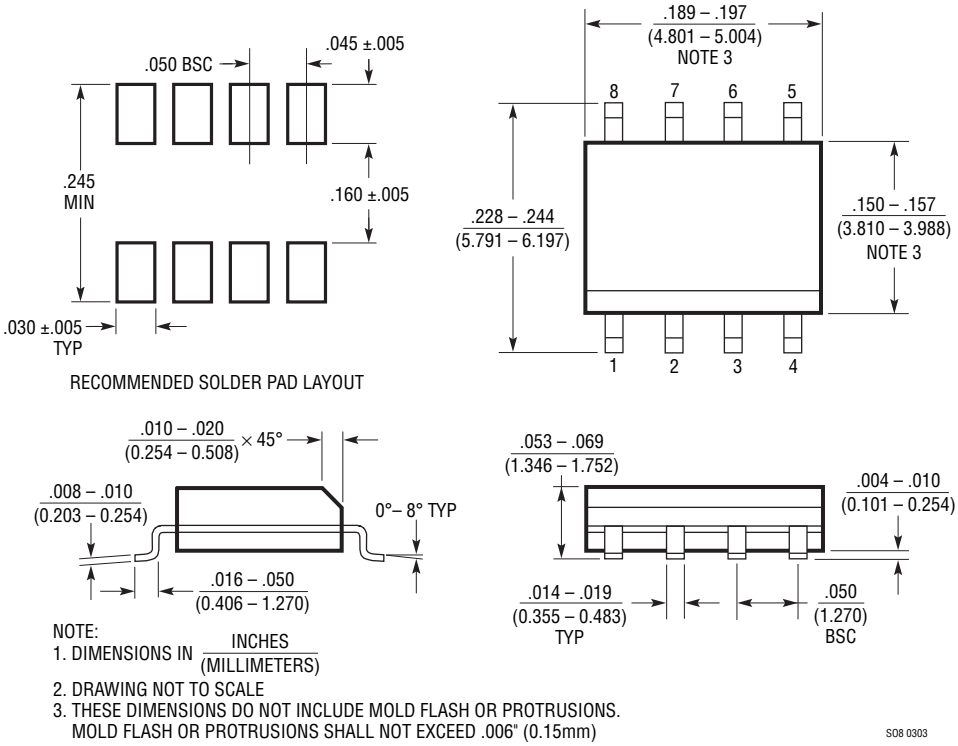

PACKAGE DESCRIPTION

Please refer to http://www.linear.com/designtools/packaging/ for the most recent package drawings.

S Package
14-Lead Plastic Small Outline (Narrow .150 Inch)
(Reference LTC DWG # 05-08-1610)

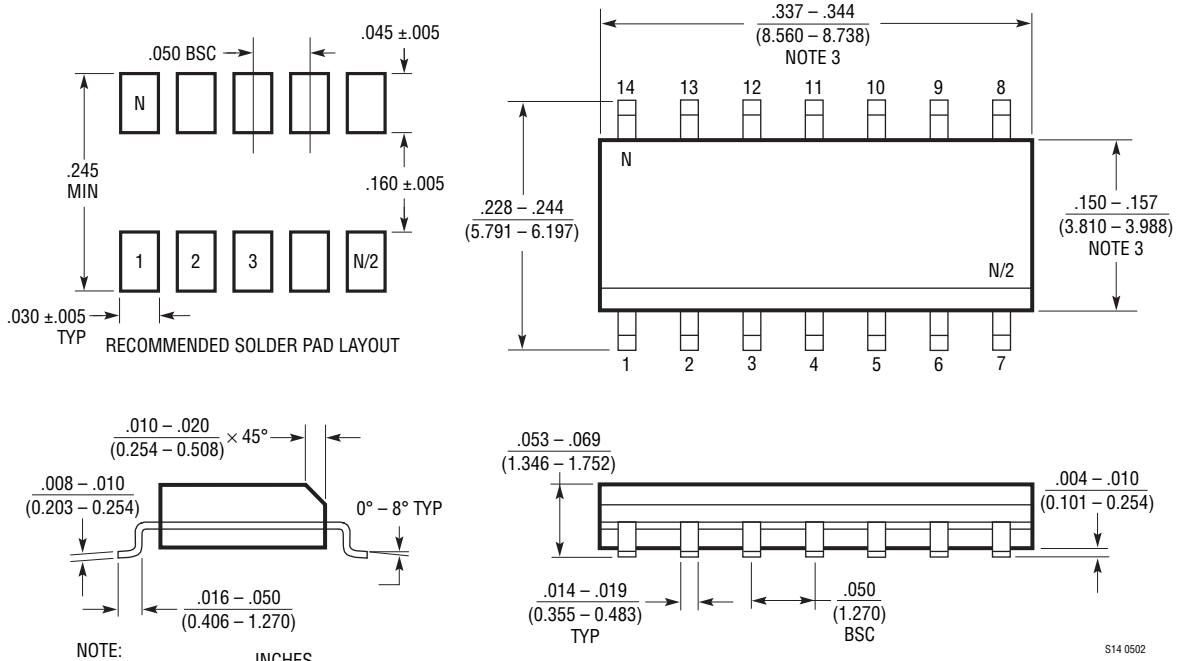

NOTE:
1. DIMENSIONS IN $\frac{\text{INCHES}}{\text{(MILLIMETERS)}}$
2. DRAWING NOT TO SCALE
3. THESE DIMENSIONS DO NOT INCLUDE MOLD FLASH OR PROTRUSIONS. MOLD FLASH OR PROTRUSIONS SHALL NOT EXCEED .006" (0.15mm)

PACKAGE DESCRIPTION

Please refer to http://www.linear.com/designtools/packaging/ for the most recent package drawings.

S5 Package
5-Lead Plastic TSOT-23
(Reference LTC DWG # 05-08-1635)

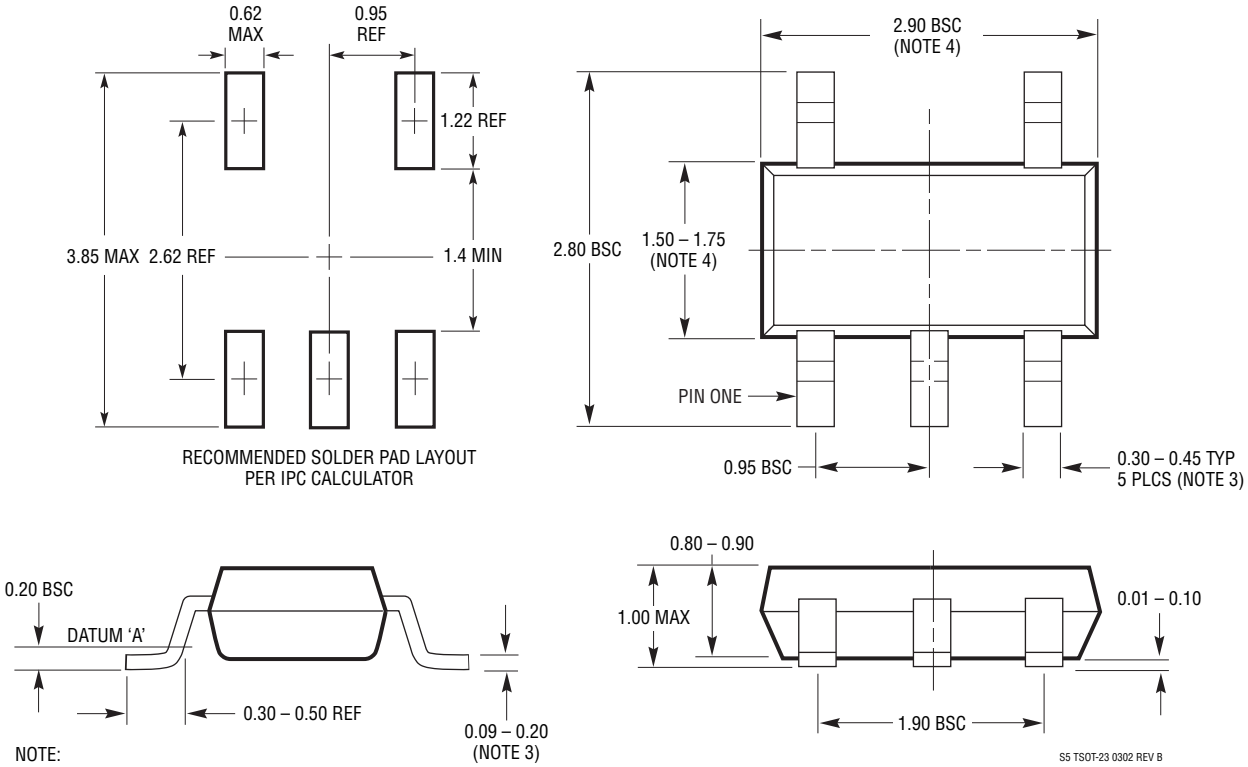

NOTE:
1. DIMENSIONS ARE IN MILLIMETERS
2. DRAWING NOT TO SCALE
3. DIMENSIONS ARE INCLUSIVE OF PLATING
4. DIMENSIONS ARE EXCLUSIVE OF MOLD FLASH AND METAL BURR
5. MOLD FLASH SHALL NOT EXCEED 0.254mm
6. JEDEC PACKAGE REFERENCE IS MO-193

REVISION HISTORY (Revision history begins at Rev C)

REV	DATE	DESCRIPTION	PAGE NUMBER
C	5/11	Revised units to MΩ for Input Resistance Common Mode	3
D	12/11	Corrected LT part number in the Description section	1
		Added H-grade	1-12
		Removed DD package junction temperature and storage temperature range in Absolute Maximum Ratings and revised T_{JMAX} value for S5 and DD packages and θ_{JA} for DD package	2
		Revised V_{OS} conditions in the Electrical Characteristics table	7, 11

Information furnished by Linear Technology Corporation is believed to be accurate and reliable. However, no responsibility is assumed for its use. Linear Technology Corporation makes no representation that the interconnection of its circuits as described herein will not infringe on existing patent rights.

TYPICAL APPLICATION

Low Noise Differential Amplifier with Gain Adjust and Common Mode Control

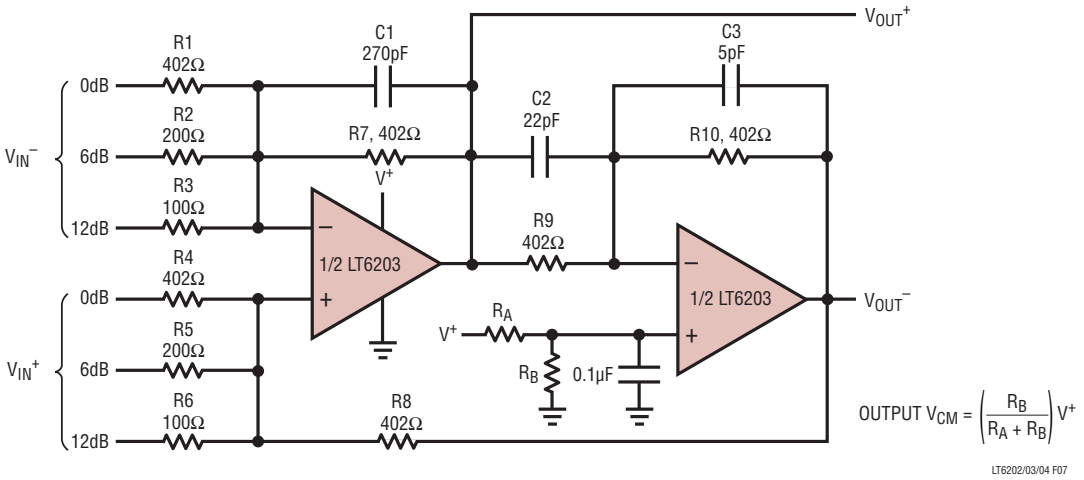

Low Noise Differential Amplifier Frequency Response

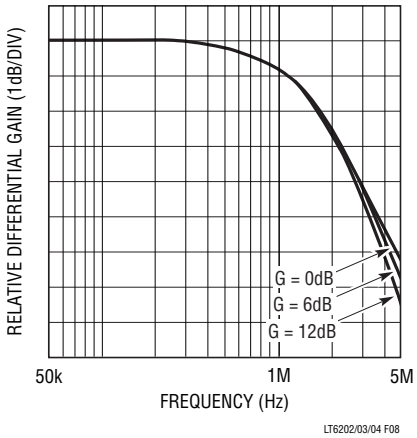

RELATED PARTS

PART NUMBER	DESCRIPTION	COMMENTS
LT1028	Single, Ultralow Noise 50MHz Op Amp	1.1nV/√Hz
LT1677	Single, Low Noise Rail-to-Rail Amplifier	3V Operation, 2.5mA, 4.5nV/√Hz, 60µV Max V_{OS}
LT1722/LT1723/LT1724	Single/Dual/Quad Low Noise Precision Op Amps	70V/µs Slew Rate, 400µV Max V_{OS}, 3.8nV/√Hz, 3.7mA
LT1800/LT1801/LT1802	Single/Dual/Quad Low Power 80MHz Rail-to-Rail Op Amps	8.5nV/√Hz, 2mA Max Supply
LT1806/LT1807	Single/Dual, Low Noise 325MHz Rail-to-Rail Amplifiers	2.5V Operation, 550µV Max V_{OS}, 3.5nV/√Hz
LT6200	Single Ultralow Noise Rail-to-Rail Amplifier	0.95nV/√Hz, 165MHz Gain Bandwidth

Linear Technology Corporation
1630 McCarthy Blvd., Milpitas, CA 95035-7417
(408) 432-1900 • FAX: (408) 434-0507 • www.linear.com
LT 1211 REV D • PRINTED IN USA
LINEAR TECHNOLOGY CORPORATION 2009

Мы молодая и активно развивающаяся компания в области поставок электронных компонентов. Мы поставляем электронные компоненты отечественного и импортного производства напрямую от производителей и с крупнейших складов мира.

Благодаря сотрудничеству с мировыми поставщиками мы осуществляем комплексные и плановые поставки широчайшего спектра электронных компонентов.

Собственная эффективная логистика и склад в обеспечивает надежную поставку продукции в точно указанные сроки по всей России.

Мы осуществляем техническую поддержку нашим клиентам и предпродажную проверку качества продукции. На все поставляемые продукты мы предоставляем гарантию .

Осуществляем поставки продукции под контролем ВП МО РФ на предприятия военно-промышленного комплекса России , а также работаем в рамках 275 ФЗ с открытием отдельных счетов в уполномоченном банке. Система менеджмента качества компании соответствует требованиям ГОСТ ISO 9001.

Минимальные сроки поставки, гибкие цены, неограниченный ассортимент и индивидуальный подход к клиентам являются основой для выстраивания долгосрочного и эффективного сотрудничества с предприятиями радиоэлектронной промышленности, предприятиями ВПК и научно-исследовательскими институтами России.

С нами вы становитесь еще успешнее!

Наши контакты:

Телефон: +7 812 627 14 35

Электронная почта: sales@st-electron.ru

Адрес: 198099, Санкт-Петербург, Промышленная ул, дом № 19, литера Н, помещение 100-Н Офис 331