SERIES 71

.5-.75" Diameter, 1/4 Amp

FEATURES

- Performance and Value Leader
- Molded-In Position Terminals
- Choice of Shaft/Bushing Diameters
- 30° and 36° Angles of Throw
- Military Qualified MIL-DTL-3786/39

DIMENSIONS: Standard and Military in inches (and millimeters)

0.125" Diameter Shaft–Styles A and MA (and sealed versions)

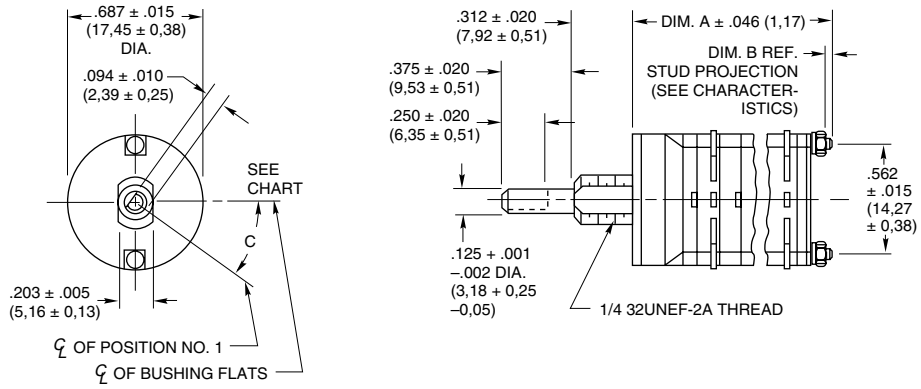

0.250" Diameter Shaft–Styles B and MB (and sealed versions)

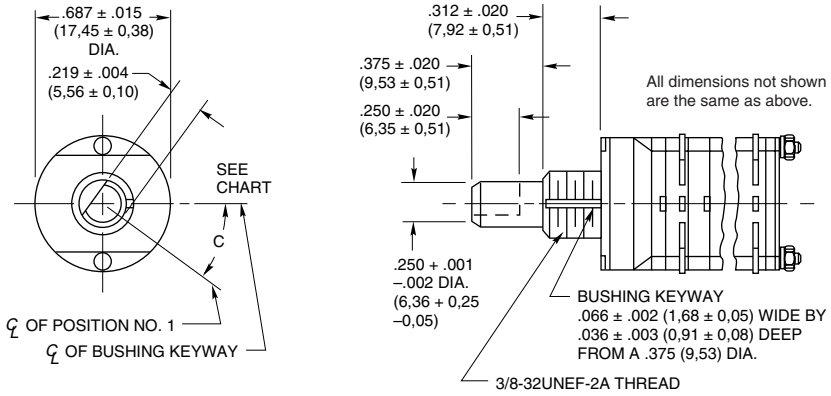

No. of Decks	Dimension A	Dimension B	Approx. Weight Grams	No. of Decks	Dimension A	Dimension B	Approx. Weight Grams
1	.761 (19,33)	.031 (0,79)	14	7	2.349 (59,66)	.312 (7,92)	26
2	.979 (24,87)	.031 (0,79)	16	8	2.567 (65,20)	.312 (7,92)	28
3	1.197 (30,40)	.031 (0,79)	18	9	2.785 (70,74)	.312 (7,92)	30
4	1.415 (35,94)	.031 (0,79)	20	10	3.003 (76,28)	.312 (7,92)	32
5	1.633 (41,48)	.031 (0,79)	22	11	3.221 (81,81)	.312 (7,92)	34
6	2.131 (54,13)	.312 (7,92)	24	12	3.439 (87,35)	.312 (7,92)	36

Angle C is 15° in 12 position switches and 36 ° in 10 position switches.

Grayhill part number and date code marked on detent cover label. Customer part number marked on request. Military part number marked when required.

Rear Views–Style A, B, MA, MB (and sealed versions)

30° and 36° Angle of Throw may be interposed on either shaft diameter.

30° Angle of Throw

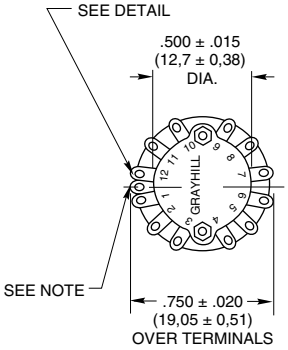

36° Angle of Throw

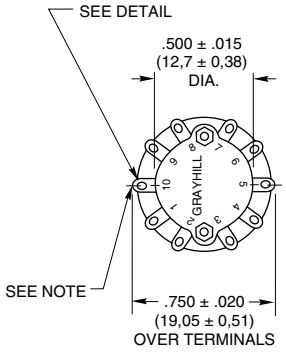

Note: Common location for a single pole per deck switch. For common location on multipole switches see circuit diagrams.

Terminal Detail

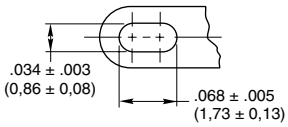

DIMENSIONS: Metric All dimensions are in millimeters

4mm Diameter Shaft–Style E and ES

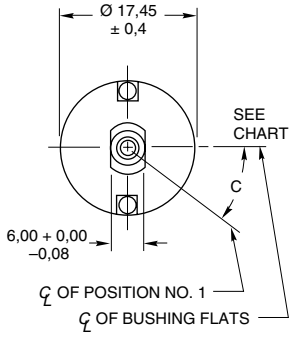

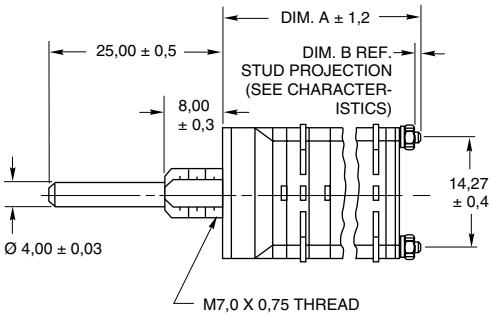

Rear Views

30° Angle of Throw

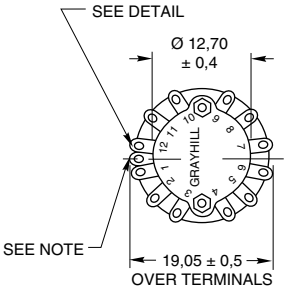

36° Angle of Throw

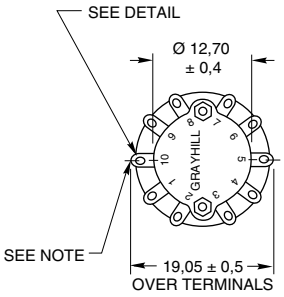

No. of Decks	Dim. A	Dim. B	Approx. Weight Grams
1	19,33	0,79	12
2	24,87	0,79	14
3	30,40	0,79	16
4	35,94	0,79	18
5	41,48	0,79	20
6	54,13	7,92	22
7	59,66	7,92	24
8	65,20	7,92	26
9	70,74	7,92	28
10	76,28	7,92	30
11	81,81	7,92	32
12	87,35	7,92	34

Angle C is 15° in 12 position switches and 36° in 10 position switches.

Terminal Detail

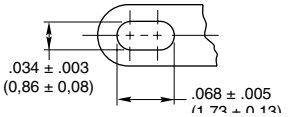

Note: Common location for a single pole per deck switch. For common location on multipole switches see circuit diagrams.

Grayhill part number and date code marked on detent cover label. Customer part number marked on request.

CIRCUIT DIAGRAMS: Standard, Military and Metric

Switch is Viewed From Shaft End and Shown in Position No. 1.
Note: All common terminals are located above base terminals as shown.

30° Angle of Throw

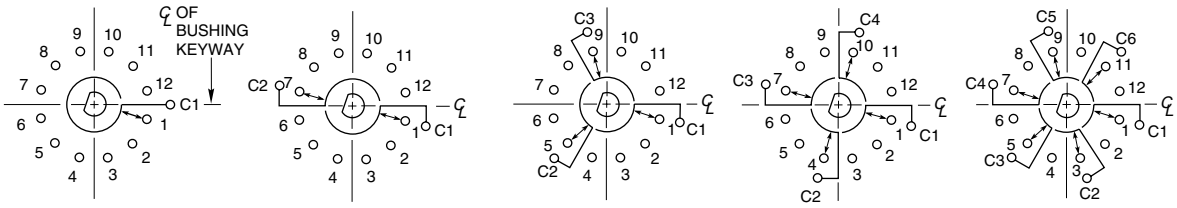

ONE POLE | TWO POLE | THREE POLE | FOUR POLE | FIVE OR SIX POLE

36° Angle of Throw

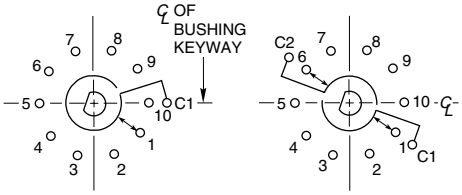

ONE POLE | TWO POLE

SERIES 71

.5-.75" Diameter, 1/4 Amp, PC Mount

FEATURES

- Terminals From One Side
- Minimum Board Footprint
- Choice of Shaft/Bushing Diameters
- 30° and 36° Angles of Throw
- Military Qualified MIL-DTL-3786/39

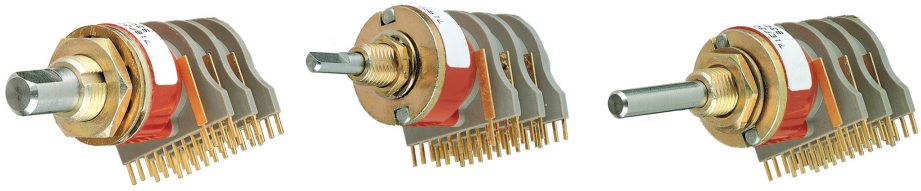

DIMENSIONS: Standard and Military in inches (and millimeters)

0.125" Diameter Shaft: Styles AF and MAF (and sealed versions)

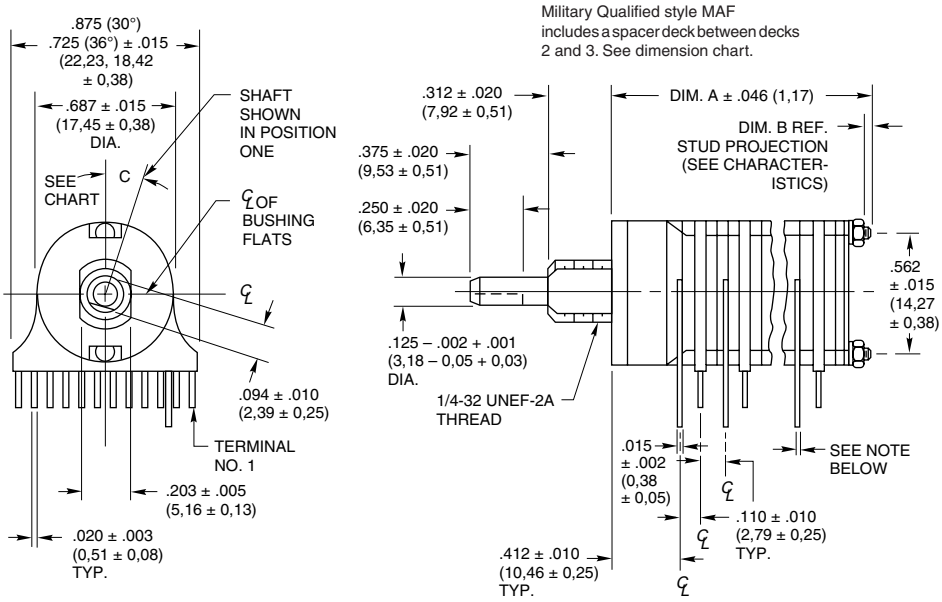

Rear Views: Styles AF, BF, MAF, MBF (and sealed versions)

30° and 36° Angle of Throw may be interposed on either shaft diameter.

30° Angle of Throw

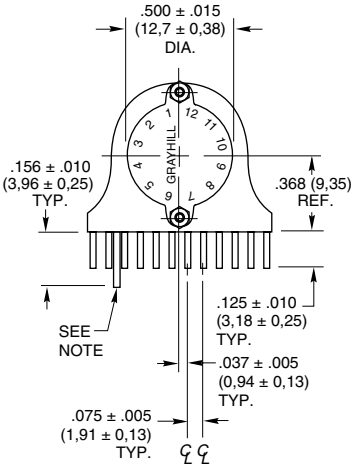

0.250" Diameter Shaft: Styles BF and MBF (and sealed versions)

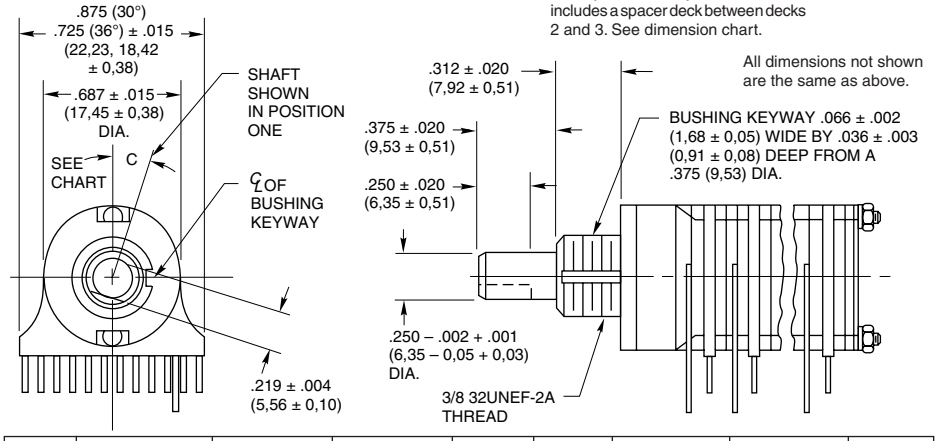

36° Angle of Throw

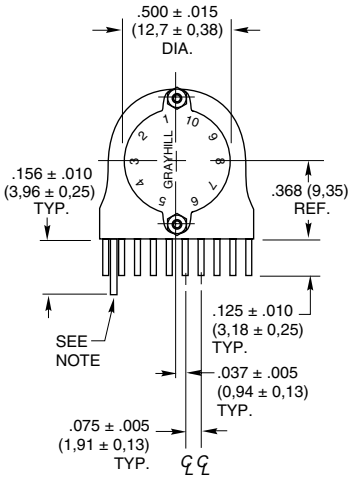

No. of Decks	Dimension A Standard Style	Dimension A Military Style	Dimension B All Styles	Approx. Weight Grams	No. of Decks	Dimension A Standard Style	Dimension B Standard Style	Approx. Weight Grams
1	.761 (19,33)	.761 (19,33)	.031 (0,79)	12	7	2.349 (59,66)	.312 (7,92)	24
2	.979 (24,87)	.979 (24,87)	.031 (0,79)	14	8	2.567 (65,20)	.312 (7,92)	26
3	1.197 (30,40)	1.415 (35,94)	.031 (0,79)	16*	9	2.785 (70,74)	.312 (7,92)	28
4	1.415 (35,94)	1.633 (41,49)	.031 (0,79)	18*	10	3.003 (76,28)	.312 (7,92)	30
5	1.633 (41,48)	N.A.	.031 (0,79)	20	11	3.221 (81,81)	.312 (7,92)	32
6	2.131 (54,13)	N.A.	.312 (7,92)	22	12	3.439 (87,35)	.312 (7,92)	34

Note: Common location for a single pole per deck switch. For common location on two pole switches see circuit diagrams.

Angle C is 15° in 12 position switches and 18° in 10 position switches.
*Military style switch is 18 grams for 3 decks and 20 grams for 4 decks.

Grayhill part number and date code marked on detent cover label. Customer part number marked on request. Military part number marked when required.

DIMENSIONS: Metric All dimensions are in millimeters

4mm Diameter Shaft: Style EF and ESF

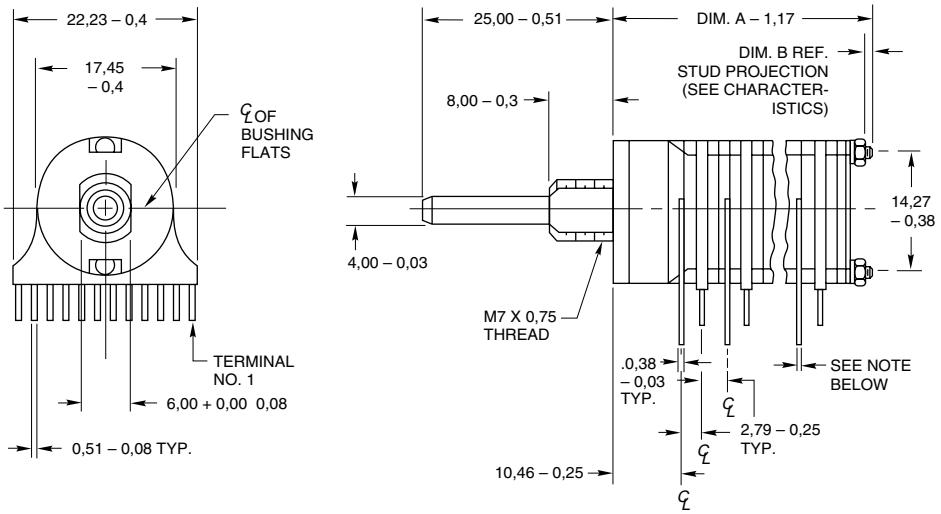

No. of Decks	Dim. A	Dim. B	Approx. Weight Grams	No. of Decks	Dim. A	Dim. B	Approx. Weight Grams
1	19,33	0,79	12	7	59,66	7,92	24
2	24,87	0,79	14	8	65,20	7,92	26
3	30,40	0,79	16	9	70,74	7,92	28
4	35,94	0,79	18	10	76,28	7,92	30
5	41,48	0,79	20	11	81,81	7,92	32
6	54,13	7,92	22	12	87,35	7,92	34

Note: Common location for a single pole per deck switch. For common location on two pole switches see circuit diagrams.

Rear Views

30° and 36° Angle of Throw may be interposed on either shaft diameter.

30° Angle of Throw

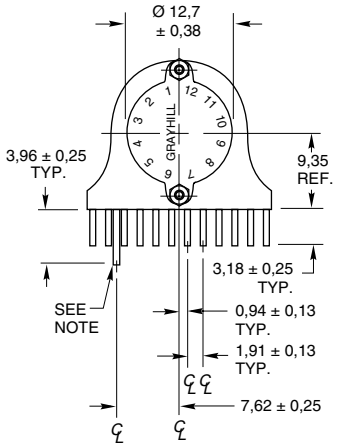

36° Angle of Throw

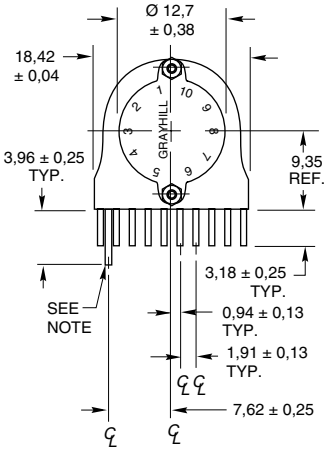

Grayhill part number and date code marked on detent cover label. Customer part number marked on request.

CIRCUIT DIAGRAMS: Standard, Military and Metric PC Mount

Circuit is Viewed From Shaft End and Shown in Position No. 1

30° Angle of Throw

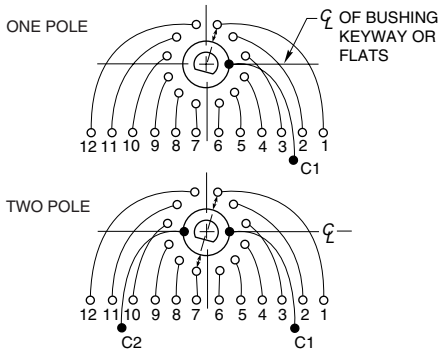

36° Angle of Throw

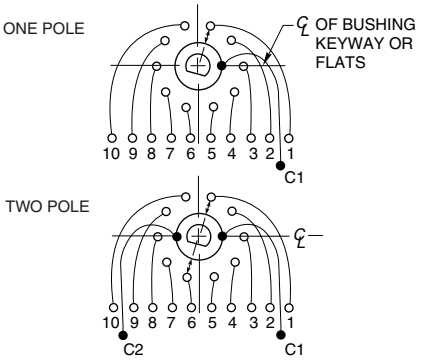

SERIES 71: PC Board Pattern in inches (and millimeters)

All Styles Except 71BT

30° Angle of Throw

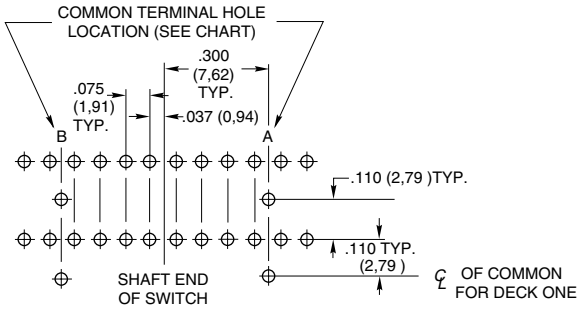

36° Angle of Throw

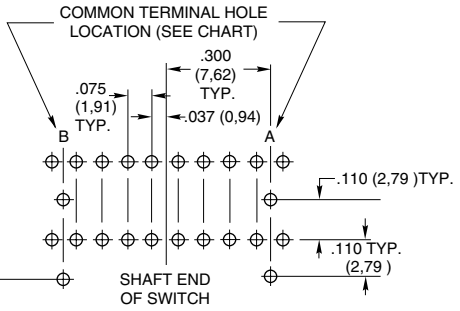

Spacer decks can be supplied to facilitate PC board layouts of three or more decks. A spacer deck does not have any terminals and provides no switching function. Dimensionally, it requires the same space as one normal switch deck. Spacer deck can be placed at any location in the switch, per your instructions. Switches which include spacer decks are procured under a special part number.

Shown for a two deck switch.
Bushing mount is recommended.

Number of Poles Per Deck	Common Terminal Hole Location
1	A
2	A and B

SERIES 71: PC MOUNT ACCESSORY

1/8" and 1/4" Diameter Shaft Styles
in inches (and millimeters)

DIMENSIONS APPLY TO BOTH WASHERS.

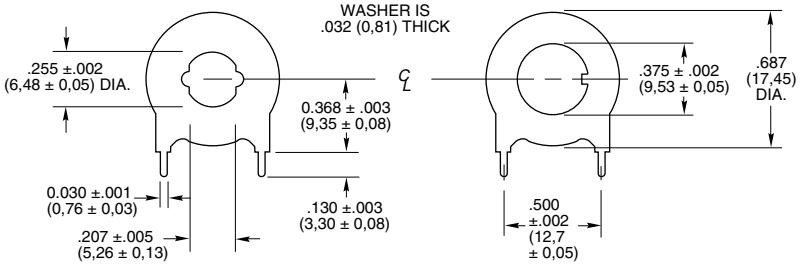

FOR USE WITH
STYLE AF
PART 71C2054

FOR USE WITH
STYLE BF
PART 71C2053

Metric Mount Styles
in millimeters

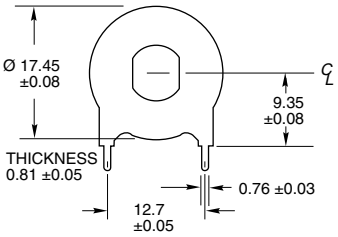

FOR USE WITH
STYLE EF
PART 71C2111

For printed circuit styles. Mounting bushing provides additional support for the front end of the switch. Order separately by appropriate part number. Rotary switch discount applies.

SERIES 71

.5-.75" Diameter, 1/4 Amp, Process Sealed

FEATURES

- No Hand Soldering Required
- Sealed to Resist Intrusion by Flux, Solder and Cleaning Solutions
- .75" Diameter
- 250 mA for 20,000 Cycles
- 36°, 1 or 2 Poles, Up to 5 Decks
- 10 Positions, Continuous Rotation, or 2-9 Positions With Fixed Stops

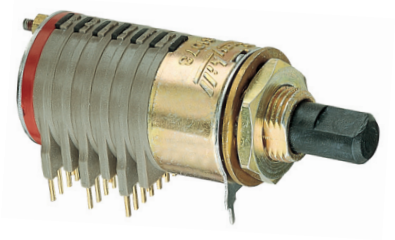

DIMENSIONS: Standard and Military in inches (and millimeters)

Style BT

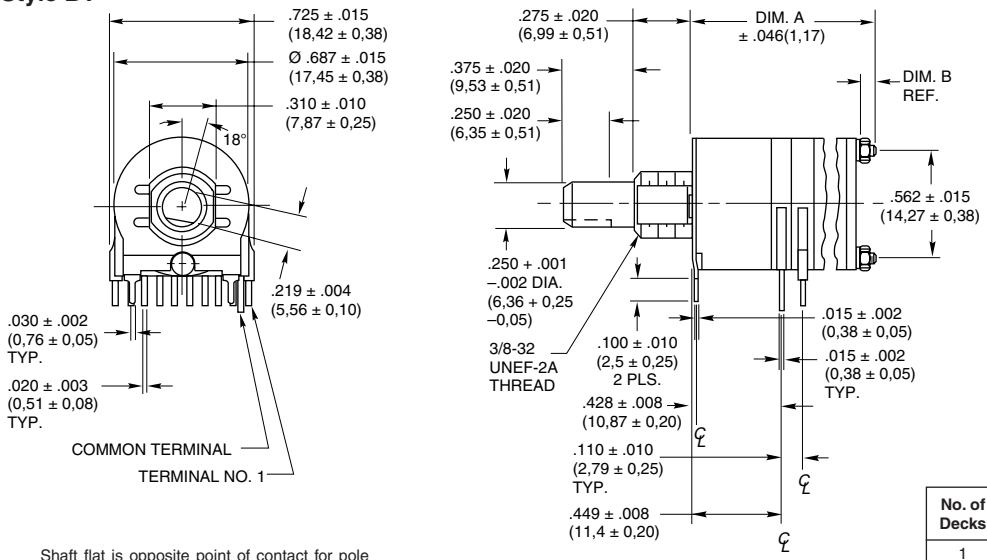

Rear View

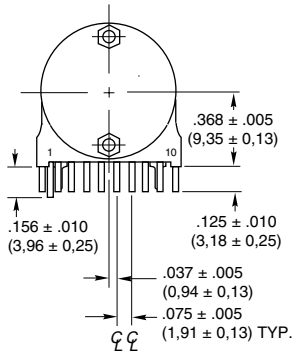

Shaft flat is opposite point of contact for pole number one. Shaft is shown here in position 1.

No. of Decks	Dimension A	Dimension B
1	0.795 (20,19)	0.031 (0,79)
2	1.040 (26,42)	0.053 (1,35)
3	1.285 (32,64)	0.076 (1,93)
4	1.530 (38,86)	0.098 (2,49)
5	1.775 (45,09)	0.120 (3,05)

Grayhill part number and date code marked on detent cover label. Customer part number marked on request.

CIRCUIT DIAGRAMS

Circuit is Viewed From Shaft End and Shown in Position No. 1

36° Angle of Throw

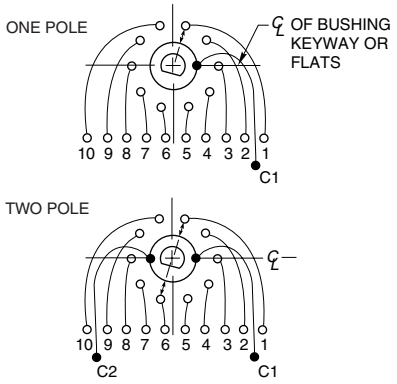

STYLE 71BT: PC Board Pattern

Including Integral Front Plate Standoffs

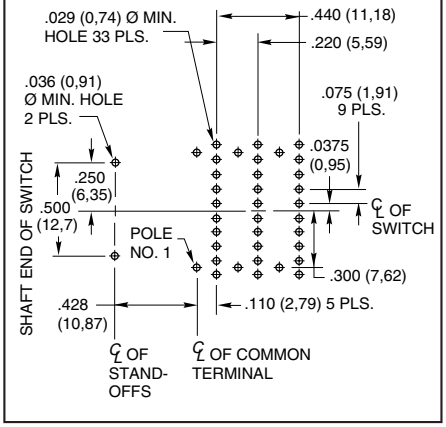

SERIES 71

0.5 to 0.75" Diameter, 1/4 Amp, Concentric Shaft

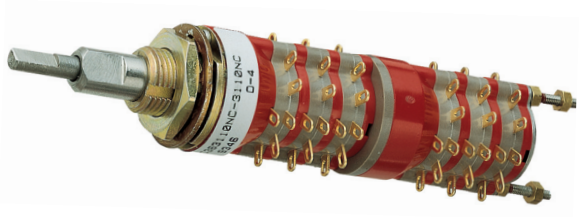

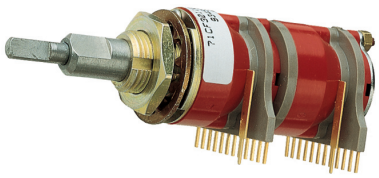

FEATURES

- Two Switches in the Panel Space of a Single Shaft Rotary

DIMENSIONS in inches (and millimeters)

Solder Lug Terminals: Style C

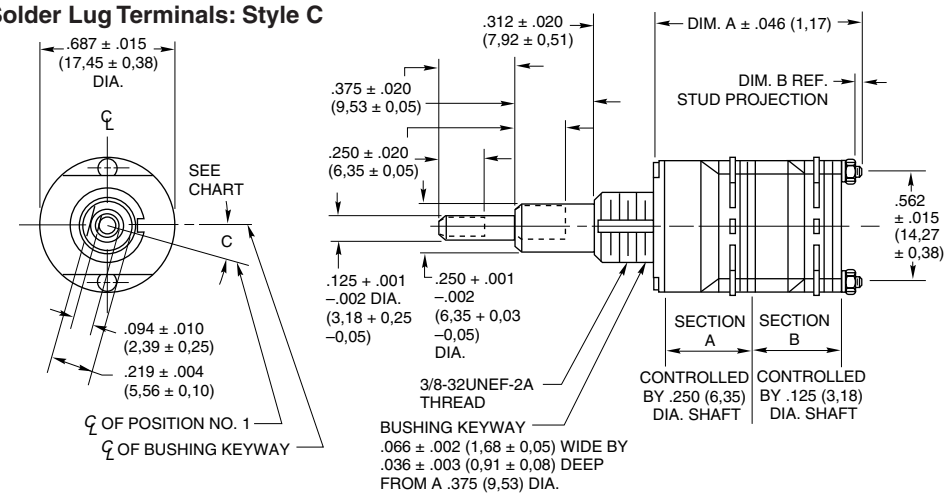

No. of Decks		Dimension A	Dimension B	Approx. Weight Grams
Sec. A	Sec. B			
1	1	1.415 (35,94)	.032 (0,81)	24
2	1	1.633 (41,49)	.032 (0,81)	26
3	1	2.131 (54,13)	.312 (7,92)	28
1	2	1.633 (41,49)	.032 (0,81)	26
2	2	2.131 (54,13)	.312 (7,92)	28
3	2	2.349 (59,66)	.312 (7,92)	30
1	3	2.131 (54,13)	.312 (7,92)	28
2	3	2.349 (59,66)	.312 (7,92)	30
3	3	2.567 (65,20)	.312 (7,92)	32

Angle C is 15° in 12 position switches and 36 ° in 10 position switches.

Terminal Detail

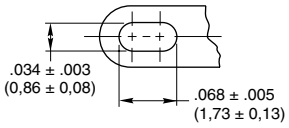

Rear Views

30° and 36° Angle of Throw may be interposed on either shaft diameter.

30° Angle of Throw

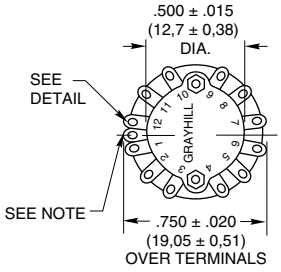

36° Angle of Throw

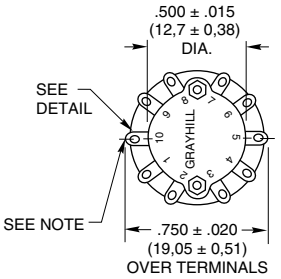

Note: Common location for a single pole per deck switch. For common location on multipole switches see circuit diagrams.

Grayhill part number and date code marked on detent cover label. Customer part number marked on request.

CIRCUIT DIAGRAMS: Solder Lug Terminals

Switch is Viewed From Shaft End and Shown in Position No. 1.

Note: All common terminals are located above base terminals as shown.

30° Angle of Throw

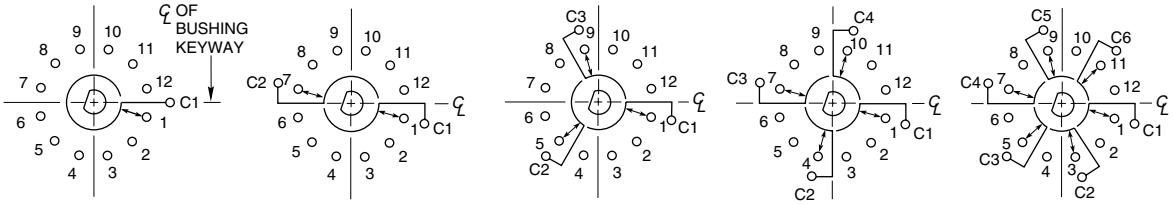

ONE POLE | TWO POLE | THREE POLE | FOUR POLE | FIVE OR SIX POLE

36° Angle of Throw

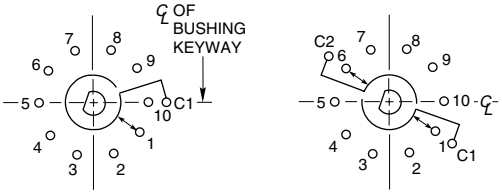

ONE POLE | TWO POLE

ADD-A-POT SWITCHES

Contact Grayhill for Series 71 Concentric Add-A-Pot or Add-A-Switch type switches.

Grayhill, Inc. • 561 Hillgrove Avenue • LaGrange, Illinois 60525-5997 • USA • Phone: 708-354-1040 • Fax: 708-354-2820 • www.grayhill.com

DIMENSIONS in inches (and millimeters)

PC Mount: Style CF

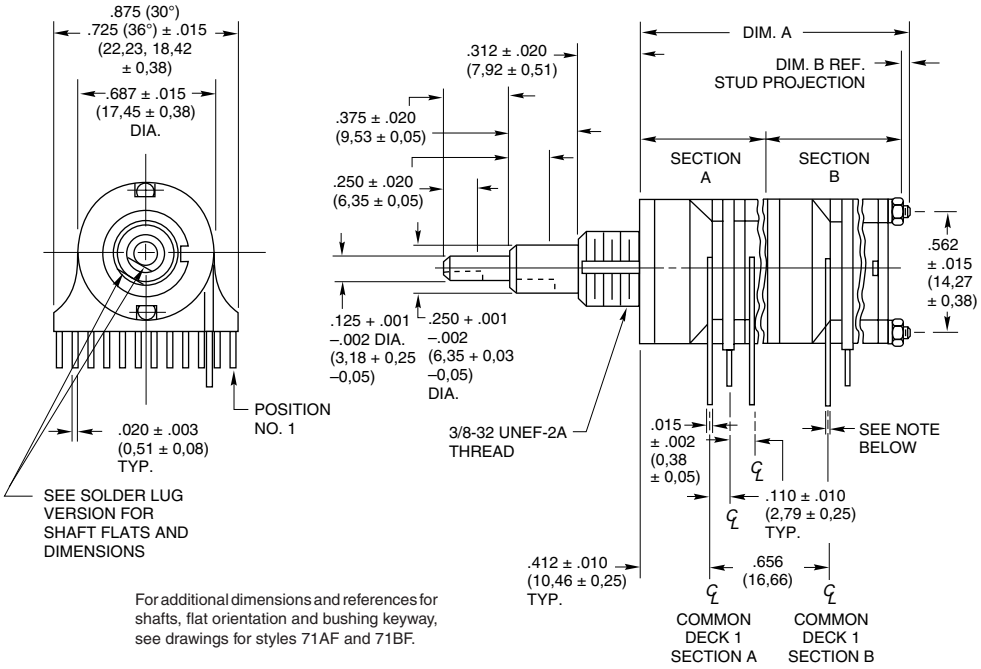

For additional dimensions and references for shafts, flat orientation and bushing keyway, see drawings for styles 71AF and 71BF.

No. of Decks		Dimension A	Dimension B	Approx. Weight Grams
Sec. A	Sec. B			
1	1	1.415 (35,94)	.032 (0,81)	24
2	1	1.633 (41,49)	.032 (0,81)	26
3	1	2.131 (54,13)	.312 (7,92)	28
1	2	1.633 (41,49)	.032 (0,81)	26
2	2	2.131 (54,13)	.312 (7,92)	28
3	2	2.349 (59,66)	.312 (7,92)	30
1	3	2.131 (54,13)	.312 (7,92)	28
2	3	2.349 (59,66)	.312 (7,92)	30
3	3	2.567 (65,20)	.312 (7,92)	32

Grayhill part number and date code marked on detent cover label. Customer part number marked on request.

Rear Views

30° and 36° Angle of Throw may be interposed on either shaft diameter.

30° Angle of Throw

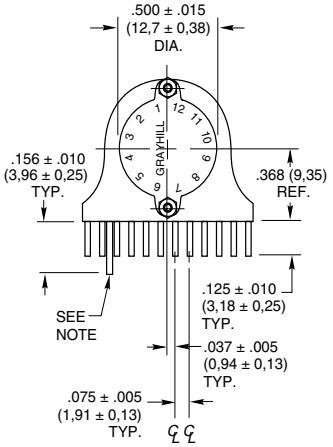

36° Angle of Throw

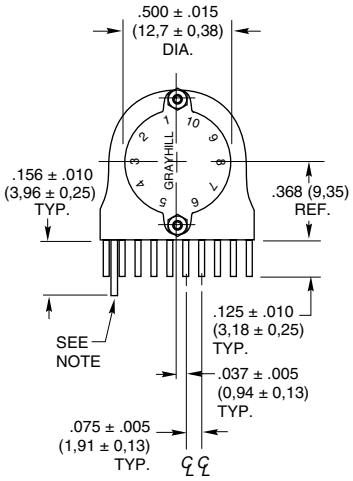

Note: Common location for a Single Pole Per Deck Switch. For common location on multipole switches see circuit diagrams.

CIRCUIT DIAGRAMS: PC Mount Terminals

Switch is Viewed From Shaft End and Shown in Position No. 1.

Note: All common terminals are located above base terminals as shown.

30° Angle of Throw

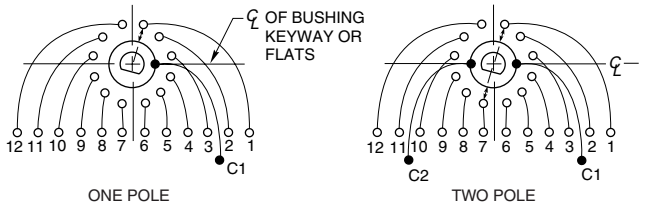

36° Angle of Throw

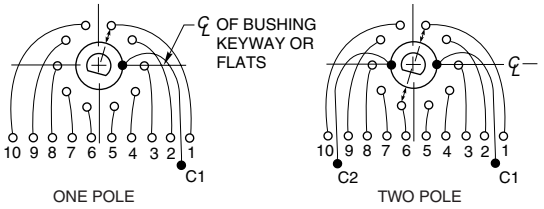

SPECIFICATIONS

Military Qualification MIL-DTL-3786/39

The military style of the Series 71 rotary switch is qualified to MIL-DTL-3786/39. Complete electrical rating information is listed on the following page. The Series 71 rotary switch qualification includes the 30° and the 36° angles of throw, in .125" (3,18) and .250" (6,35) diameter shafts, with solder lug terminals and printed circuit terminals, in sealed and unsealed style switches. Standard variations such as shaft and/or bushing length, etc. that do not affect the switch performance can also be marked as qualified product. Contact Grayhill for complete details.

Dimensionally the military style is the same as the standard style with the exception of the PC version of 3 or 4 decks; a spacer deck between decks 2 and 3 adds another deck length to the switch without increasing the number of operative decks.

Another difference in the standard and military styles is the mounting hardware. Ordered as options with a standard style switch these items are included with the military style switch: non-turn washer with solder lug style and a non-turn washer plus a mounting bushing washer with the PC terminal style.

Complete specification drawings are available from Grayhill, Inc. for the standard military qualified products. Military qualified Series 71 rotary switches may be ordered by the "M" number listed in Military Specification Sheet/39 or by Grayhill part number. All qualified switches will be marked to the specification.

Military Shaft and Panel Seal

A shaft and panel seal is available to provide watertight mounting of the Series 71 standard military style rotary switches. Sealing is accomplished by an O-ring shaft seal and a panel seal washer. Panel seal dimension differences are shown in the dimensional drawings. When the panel seal is compressed, dimensions are approximately the same as an unsealed switch. If the non-turn washer supplied with the switch is used, it should not be allowed to extend entirely through the panel when mounting a sealed switch. However, the bushing may be used as a non-turn device instead. Switches are provided with a double flat bushing in styles which include the letter A and with a bushing which has a keyway in the styles which include the letter B.

SPECIFICATIONS: Materials and Finishes

Materials and Finishes

Standard Style

Cover: Diallyl per (MIL-M-14) ASTM-D-5948 except for 71 BT (see bushing).
Base and Deck Separator: Diallyl per (MIL-M-14) ASTM-D-5948
Rotor Mounting Plate: Thermoplastic
Bushing: Zinc casting, tin/zinc-plated.
Through Bolts and Nuts, Shaft and Rear Support Plate, Stop Pins and Stop Arm (All Others): Stainless steel
Shaft, Stop Plates, Stop Arm (71BT): Reinforced thermoplastic
Detent Rotor: Reinforced thermoplastic for 71BT; phenolic per (MIL-M-14) ASTM-D-5948 for all others
Detent Balls: Steel, nickel-plated
Detent Springs: Tinned music wire
Rotor Contact: Silver alloy and beryllium copper
Base Contacts, Common Plate and Terminals: Brass, Gold plate .000005" minimum over Silver plate .00005" over nickel .00002".
Front Support Plate (71 BT only): Tempered steel, tin/lead-plated.
Interdeck Seal (71 BT Only): Silicone
Extension: Brass, unplated
Mounting Hardware: One mounting nut and one internal tooth lockwasher are supplied with each switch. For switches with A in the style description, the nut is .062" (1,57) thick by .312" (7,92) across flats. For switches with B or C in the style description, the nut is .094" (2,39) thick by .562" (14,27) across flats. Nuts are brass, tin/zinc-plated or stainless steel.

Materials and Finishes

Military Qualified

Cover, Base and Deck Separator: Diallyl per (MIL-M-14) ASTM-D-5948
Rotor Mounting Plate: Thermoplastic
Bushing: Zinc casting, tin/zinc-plated
Through Bolts and Nuts, Shaft Extension, Lockwashers, Shaft and Rear Support Plate, Stop Pins and Stop Arm (All Others): Stainless steel
Detent Balls: Steel, nickel-plated
Detent Springs: Tinned music wire
Rotor Contact: Silver alloy and beryllium copper
Base Contacts, Common Plate and Terminals: Brass, gold plate .000005" minimum over silver plate .00005" over Nickel .00002".
Detent Rotor: Phenolic per (MIL-M-14) ASTM-D-5948
Mounting Hardware: One mounting nut and one internal tooth lockwasher are supplied with each Series 71 switch. For switches with Style A in the description, the nut is .062" (1,57) thick by .312" (7,92) across flats. For switches with Style B or C in the description, the nut is .094" (2,39) thick by .562" (14,27) across flats. Nuts are brass, tin/zinc-plated or stainless steel.
Additional Hardware: Each switch is supplied with a non-turn washer to use if desired. Additionally, each PC mount switch is supplied with a mounting bushing washer (see PC Mount Accessory). For switches with Style A in the description, non-turn washer is stainless steel; for switches with Style B in the description, non-turn washer is stainless steel. Mounting bushing washer (PC Mount Accessory) is brass, tin/zinc-plated.

SPECIFICATIONS: Electrical Ratings, Others

Electrical Ratings
General

Charts: Charts shown are for non-shorting (break before make) contacts. Measurements were made at 25°C and 68% relative humidity. The load life curves show the number of rotational cycles which can be expected for the voltage, current and type of load. Thus, for a standard style switch with a 300 milliampere 115 Vac resistive load, the expected life is 15,000 cycles. Reducing the load to 200 milliamperes increases the life to 25,000 cycles. Life limiting or failure criteria are listed in the rating sections which follow.

Cycles: A cycle is a 360° rotation and a return through all switch positions to the starting position.

Voltage: As listed in charts.

Standard

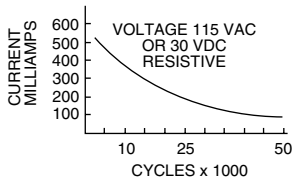

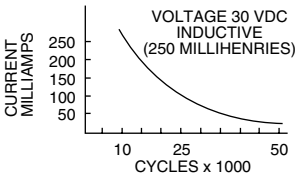

Military

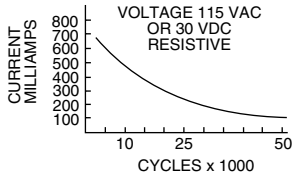

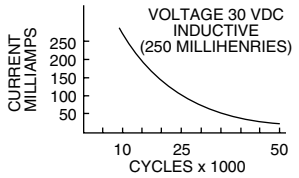

Electrical Ratings
Standard Style

Curves are based on the following failure criteria:

Contact Resistance: 50 milliohms maximum (20 milliohms initially).

Insulation Resistance: 1,000 megohms minimum between terminals and shaft. (50,000 megohms initially).

Voltage Breakdown: 500 Vac minimum between mutually insulated parts.

Current Rating: These switches will carry 4 amperes with a maximum contact temperature rise of 20°C. If the life limiting characteristics are less critical than those shown above, if elevated temperatures or reduced pressures are involved, Grayhill can predict the switch life for the application.

Meet the Following Requirements of MIL-DTL-3786: Moisture Resistance: Medium and High Shock; Vibration (10 to 2,000 cps); Thermal Shock (-65°C to 85°C); Salt Spray, Explosion; and Stop Strength (10 in-lb).

Electrical Ratings
Military Style

Curves are based on the following failure criteria:

Qualified to the following MIL-DTL-3786/39 circuit values: (also see standard style description.) The Series 71 has been tested to meet the requirements of MIL-DTL-3786, Style SR39, the majority of which are listed here. At 85°C approximately 68% relative humidity and sea level pressure, the switches have been tested to make and break the following loads, as stated in MIL-DTL-3786/39: 125 milliamperes at 28 Vdc resistive; 75 milliamperes at 115 Vac resistive.

The switches have also been tested at reduced barometric pressure (70,000 feet), 25°C at approximately 68% relative humidity to make and break the following loads as stated in MIL-DTL-3786/39: 50 milliamperes, 28 Vdc resistive; 20 milliamperes, 115 Vac resistive. When tested to the above loads at stated conditions, the Series 71 switches meet the following life-limiting criteria after 25,000 cycles of operation in accordance with MIL-DTL-3786/39.

Contact Resistance: 50 milliohms maximum after life.

Insulation Resistance: 1,000 megohms minimum between terminals and shaft.

Dielectric Strength: 500 Vac (atmospheric pressure) and 350 Vac (reduced pressure) between mutually insulated parts.

The Series 71 also meets the requirements of MIL-DTL-3786/39 for moisture resistance, stop strength, rotational torque, vibration (10 through 2,000 cps), medium and high shock, salt spray, explosion, thermal shock (-65°C to 85°C) and terminal pull. When tested at sea level, 25°C and 68% relative humidity with failure criteria of 50 milliohms maximum contact resistance and 500 Vac breakdown voltage, these switches will make and break 250 milliamps at 28 Vdc inductive (250 millihenries) 500 milliamps at 28 Vdc resistive: 500 milliamps at 115 volts Vac, 60 hertz resistive, for 10,000 cycles of operation.

Additional Characteristics
Standard and Military Styles

Rotational Torque: 4-32 ounce-inches, (28-230 N•mm) depending on the number of poles per deck and the number of decks.

Contacts: Shorting or non-shorting wiping contacts with over 100 grams of contact force.

Shaft Flat Orientation: Opposite first position pole no. 1 (See Circuit Diagrams).

Terminals: Switches are provided with full circle of terminals regardless of the number of active positions.

Extended Studs: Switches of 6 or more decks (or concentric switches of 4 or more) have longer studs and extra stud nuts for recommended double end mounting. Stud hole size is 1/16" diameter for #0-80 NF-2A thread.

Stop Strength: 10 pound-inches.

Mounting Bushing Strength: 10 pound-inches.

ADJUSTABLE STOPS

Set and Reset Stops to Limit Rotation
Form, Fit, Function Equivalent to Fixed Stop Styles

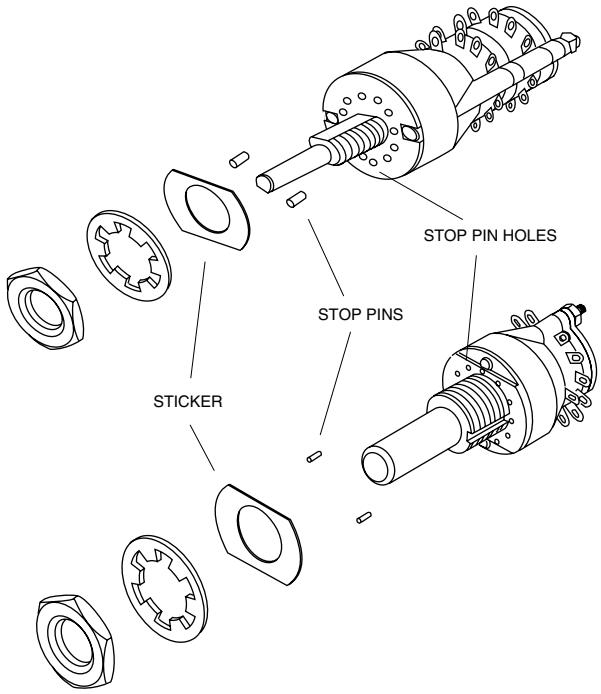

The adjustable stop Series 71 rotary switches allow you to change the number of positions per pole. Simply remove and relocate stop pins in the holes in the front of the switch. The pins are held in place by a self adhesive sticker which fits over the front plate.

This feature is available in the Series 71 single shaft standard switches with either 1/8" or 1/4" diameter shafts with either PC or solder lug terminals. It is not available in military qualified or concentric shaft styles.

All dimensions, ratings and characteristics are the same as the fixed stop equivalent. The chart shown here describes the adjustable stop style substitutions for the fixed stop styles. Although Series 71 is not an exact dimensional equivalent of the fixed stop styles of Series 8 and 9, it most nearly represents a functional substitution.

Fixed Stop Style	Adjustable Stop Substitution
08A	71AD
09A	71AD
71A	71AD
71AF	71ADF
71B	71BD
71BF	71BDF
71E	71ED
71EF	71EDF

SHAFT AND PANEL SEAL

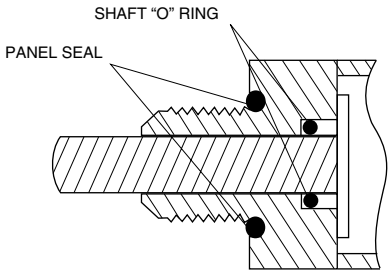

The shaft is sealed by an O-ring inside the bushing. The panel is sealed by an O-ring at the base of the bushing.

The seals do not alter the dimensions as shown in the drawings when the switch is mounted.

The panel seal is silicone rubber. The shaft seal is an O-ring per MIL-P-5516B.

ACCESSORIES: Non-Turn Washers in inches (and millimeters)

1/8" and 1/4" Diameter Shaft Switches

The bushing of the Series 71 switch is designed so the switch will not turn if the panel has been cut to fit the exact bushing shape. The bushing for the 1/8" diameter shaft switch has a double flat; the 1/4" diameter shaft switch has a keyway in the bushing. An alternate means of keeping the switches from turning is to mount them with optional, non-turn washers.

Part number 50J1066 is made of Stainless Steel. It is supplied with military switches with Style A in the description. When ordered for standard product, a like number of switches must be ordered.

Part number 12C1087-1 is Brass, tin/zinc-plated and may be ordered for standard product.

Part number SHH694-5 is Stainless Steel washer supplied with all military style switches with Style B in the description.

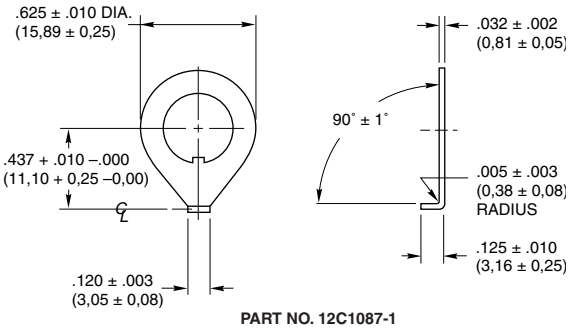

PART NO. 12C1087-1
STANDARD

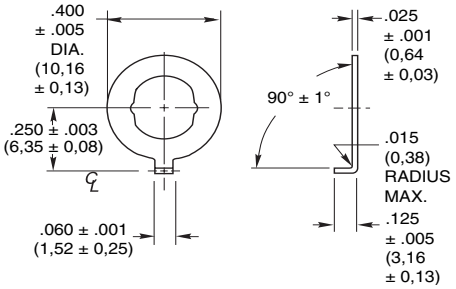

PART NO. 50J1066
MILITARY AND STANDARD
FOR 1/8" DIAMETER SHAFT

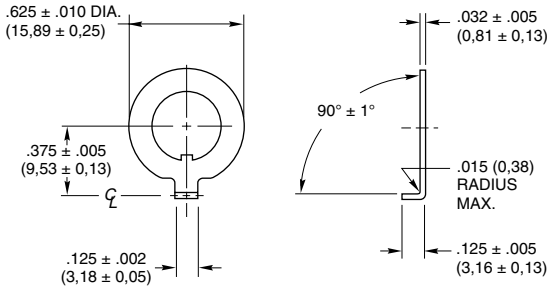

PART NO. SHH694-5
MILITARY
FOR 1/4" DIAMETER SHAFT

4mm Diameter Shaft Switches

Non-Turn Washer
For styles E, ED, EF and EDF.
Mounting bushing washer provides non-turn feature.
302 Stainless Steel.
Part No. 71 J1103. Contact Grayhill for price.

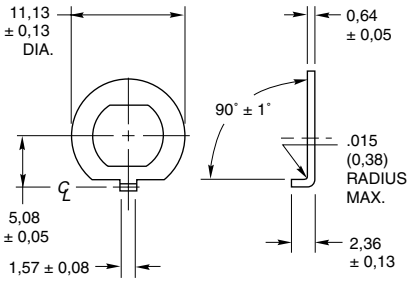

CHOICES AND LIMITATIONS: Series 71

A = 1/8" Diameter Shaft
B = 1/4" Diameter Shaft
E = Metric Mount Shaft & Bushing
D = Adjustable Stops (Adj. Stop)
S = Shaft and Panel Seal (S/P Seal)

F = PC Mount Terminals
T = PC Mount Terminals and Process Sealed Switching Decks & Bushing; no panel seal
M = Military

All switches without F or T have solder lugs
C = Concentric Shaft
2 Switches with same Style and Angle of Throw, one behind the other.
Limits below apply to either switch section (A or B).

Style Choices: Basic Style	Style Choices: With S/P Seal	Style Choices: Adj. Stop	Angle of Throw	No. Of Decks	Poles Per Deck	Positions Per Pole[1]	Shorting Or Non-Shorting
A B E	AS BS ES	AD BD ED	30°	01 thru 12 01 thru 08 01 thru 05 01 thru 04 01 thru 03 01 or 02	1 2 3 4 5[5] 6[5]	02 thru 12[3] 02 thru 06 02 thru 04 02 or 03 02 02	N or S N or S N or S N or S N or S N or S
			36°	01 thru 12 01 thru 08	1 2	02 thru 10[3] 02 thru 05	N or S N or S
AF BF EF	ASF BSF ESF	ADF BDF EDF	30°	01 thru 12 01 thru 08	1 2	02 thru 12[3] 02 thru 06	N or S N or S
			36°	01 thru 12 01 thru 08	1 2	02 thru 10[3] 02 thru 05	N or S N or S
BT	——	——	36°	01 thru 05 01 thru 05	1 2	02 thru 10[3] 02 thru 05	N or S N or S
MA MB	MAS MBS	—— ——	30°	01 thru 05[4] 01 thru 05[4] 01 thru 05[4] 01 thru 04[4] 01 thru 02[4]	1 2 3 4 6	02 thru 12[3] 02 thru 06 02 thru 04 02 or 03 02	N or S N or S N or S N or S N or S
			36°	01 thru 05[4] 01 thru 05[4]	1 2	02 thru 10[3] 02 thru 05	N or S N or S
MAF MBF	MASF MBSF	—— ——	30°	01 thru 04[2,4] 01 thru 04[2,4]	1 2	02 thru 12[3] 02 thru 06	N or S N or S
			36°	01 thru 04[2,4] 01 thru 04[2,4]	1 2	02 thru 10[3] 02 thru 05	N or S N or S
C	——	——	30°	01 thru 03 01 thru 03 01 or 02 01 01 01	1 2 3 4 5 6	02 thru 12[3] 02 thru 06 02 thru 04 02 or 03 02 02	N or S N or S N or S N or S N or S N or S
			36°	01 thru 03 01 thru 03	1 2	02 thru 10[3] 02 thru 05	N or S N or S
CF	——	——	30°	01 thru 03 01 thru 03	1 2	02 thru 12[3] 02 thru 06	N or S N or S
			36°	01 thru 03 01 thru 03	1 2	02 thru 10[3] 02 thru 05	N or S N or S

[1] For Adjustable Stop styles (with the letter D), use AJ instead of number of positions when ordering.
[2] Military Qualified PC mount switches of 3 or 4 operative decks have an additional spacer deck after deck 2. Use total decks to calculate length; but use only the number of *operative* decks when creating the part number.
[3] For 1-pole switches with maximum positions, specify **F**ixed stop after last position or **C**ontinuous rotation when ordering. (Note: 1 p, 71BT, 10 positions, is available only as **C**ontinuous).
[4] In addition to qualified types (Solder lug–5 decks; PC mount–4 decks), Grayhill can provide switches with additional decks in the materials of the 'M' style. Contact Grayhill.
[5] Switches in 30° throw with 5 or 6 poles per deck are not available with adjustable stops.

ORDERING INFORMATION: Single Shaft Switches

71A30–02–1–12N–C

- **Series**
- **Style*:** Letter(s) from the Choices and Limitations chart
- **Angle of Throw:** 30° or 36°
- **Number of Decks:** As limited by Choices and Limitations chart
- **Stop Arrangement:** Use suffix only when ordering 1 pole with maximum positions.
  C = Continuous rotation; F = Stop between last and first positions
- **Type of Contacts:** N = Non-shorting; S = Shorting
- **Positions Per Pole:** 02 to 12 per Choices chart.
  For adjustable stop switches (D) use AJ here.
- **Poles Per Deck:** As limited by the Choices chart

** All rotary switches that are required to have military designated markings and testing adhering to MIL-DTL-3786 are to be ordered by specifying the military part number identified on the appropriate slash sheet.*

ORDERING INFORMATION: Concentric Shaft Switches

71C362110NC–3202S

Entire Switch

- **Series and Style:** 71C or 71CF
- **Angle of Throw:** 30° or 36°. Both switch sections will be the same.

Switch Section A (Front Switch)

- **Number of Decks:** 1 to 3, per Choices and Limitations chart
- **Poles Per Deck:** As limited by the Choices and Limitations chart
- **Positions Per Pole:** 02 to 12 per Choices and Limitations chart
- **Type of Contacts:** N = Non-shorting; S = Shorting
- **Stop Arrangement:** Use suffix only when ordering 1 pole with maximum positions.
  C = Continuous rotation; F = Stop between last and first positions

Switch Section B (Rear Switch)

- **Stop Arrangement:** Use suffix only when ordering 1 pole with maximum positions.
  C = Continuous rotation; F = Stop between last and first positions
- **Type of Contacts:** N = Non-shorting; S = Shorting
- **Positions Per Pole:** 02 to 12 per Choices and Limitations chart.
- **Poles Per Deck:** As limited by the Choices and Limitations chart
- **Number of Decks:** 1 to 3, per Choices and Limitations chart

Available from your local Grayhill Distributor.
For prices and discounts, contact a Local Sales Office, an authorized local Distributor or Grayhill.

Мы молодая и активно развивающаяся компания в области поставок электронных компонентов. Мы поставляем электронные компоненты отечественного и импортного производства напрямую от производителей и с крупнейших складов мира.

Благодаря сотрудничеству с мировыми поставщиками мы осуществляем комплексные и плановые поставки широчайшего спектра электронных компонентов.

Собственная эффективная логистика и склад в обеспечивает надежную поставку продукции в точно указанные сроки по всей России.

Мы осуществляем техническую поддержку нашим клиентам и предпродажную проверку качества продукции. На все поставляемые продукты мы предоставляем гарантию .

Осуществляем поставки продукции под контролем ВП МО РФ на предприятия военно-промышленного комплекса России , а также работаем в рамках 275 ФЗ с открытием отдельных счетов в уполномоченном банке. Система менеджмента качества компании соответствует требованиям ГОСТ ISO 9001.

Минимальные сроки поставки, гибкие цены, неограниченный ассортимент и индивидуальный подход к клиентам являются основой для выстраивания долгосрочного и эффективного сотрудничества с предприятиями радиоэлектронной промышленности, предприятиями ВПК и научно-исследовательскими институтами России.

С нами вы становитесь еще успешнее!

Наши контакты:

Телефон: +7 812 627 14 35

Электронная почта: sales@st-electron.ru

Адрес: 198099, Санкт-Петербург, Промышленная ул, дом № 19, литера Н, помещение 100-Н Офис 331