Crimzon® ZLP32300

Z8® OTP MCU with Infrared Timers

Product Specification

PS020823-0208

Copyright ©2008 by Zilog®, Inc. All rights reserved.
www.zilog.com

Warning: DO NOT USE IN LIFE SUPPORT

LIFE SUPPORT POLICY

ZILOG'S PRODUCTS ARE NOT AUTHORIZED FOR USE AS CRITICAL COMPONENTS IN LIFE SUPPORT DEVICES OR SYSTEMS WITHOUT THE EXPRESS PRIOR WRITTEN APPROVAL OF THE PRESIDENT AND GENERAL COUNSEL OF ZILOG CORPORATION.

As used herein

Life support devices or systems are devices which (a) are intended for surgical implant into the body, or (b) support or sustain life and whose failure to perform when properly used in accordance with instructions for use provided in the labeling can be reasonably expected to result in a significant injury to the user. A critical component is any component in a life support device or system whose failure to perform can be reasonably expected to cause the failure of the life support device or system or to affect its safety or effectiveness.

Document Disclaimer

©2008 by Zilog, Inc. All rights reserved. Information in this publication concerning the devices, applications, or technology described is intended to suggest possible uses and may be superseded. ZILOG, INC. DOES NOT ASSUME LIABILITY FOR OR PROVIDE A REPRESENTATION OF ACCURACY OF THE INFORMATION, DEVICES, OR TECHNOLOGY DESCRIBED IN THIS DOCUMENT. ZILOG ALSO DOES NOT ASSUME LIABILITY FOR INTELLECTUAL PROPERTY INFRINGEMENT RELATED IN ANY MANNER TO USE OF INFORMATION, DEVICES, OR TECHNOLOGY DESCRIBED HEREIN OR OTHERWISE. The information contained within this document has been verified according to the general principles of electrical and mechanical engineering.

Z8, Z8 Encore!, Z8 Encore! XP, Z8 Encore! MC, Crimzon, eZ80, and ZNEO are trademarks or registered trademarks of Zilog, Inc. All other product or service names are the property of their respective owners.

ISO 9001:2000
FS 507510

Zilog products are designed and manufactured under an ISO registered 9001:2000 Quality Management System. For more details, please visit www.zilog.com/quality.

Revision History

Each instance in the Revision History table reflects a change to this document from its previous revision. For more details, refer to the corresponding pages or appropriate link in the table.

Date	Revision Level	Description	Page Number
February 2008	23	Updated Ordering Information section.	87
January 2008	22	Updated Ordering Information section.	87
July 2007	21	Updated Disclaimer section and implemented style guide.	All
February 2007	20	Updated Low-Voltage Detection.	58
May 2006	19	Updated Figure 33 with pin P22 in SMR block input.	52
December 2005	18	Updated Clock and Input/Output Ports sections.	15 and 51

Table of Contents

Architectural Overview **1**
Development Features 2
Functional Block Diagram 3
Pin Description **5**
Pin Functions 10
XTAL1 Crystal 1 (Time-Based Input) 10
XTAL2 Crystal 2 (Time-Based Output) 10
Input/Output Ports 10
RESET (Input, Active Low) 18
Functional Description **19**
Program Memory 19
RAM 19
Expanded Register File 20
Register File 24
Stack 25
Timers 25
Counter/Timer Functional Blocks 33
Interrupts 43
Clock 46
Power Management 47
Port Configuration 48
Stop Mode Recovery 49
Watchdog Timer Mode 55
Low-Voltage Detection 58
Expanded Register File Control Registers (0D) 60
Expanded Register File Control Registers (0F) 65
Standard Control Registers 69
Electrical Characteristics **75**
Absolute Maximum Ratings 75
Standard Test Conditions 75
Capacitance 76
DC Characteristics 76
AC Characteristics 78
Packaging **80**
Ordering Information **87**
Part Number Description 89
Index **91**
Customer Support **95**

Architectural Overview

Zilog's Crimzon® ZLP32300 is an OTP-based member of the MCU family of infrared microcontrollers. With 237 B of general-purpose RAM and 8 KB to 32 KB of OTP, Zilog's CMOS microcontrollers offer fast-executing, efficient use of memory, sophisticated interrupts, input/output bit manipulation capabilities, automated pulse generation/reception, and internal key-scan pull-up transistors.

The Crimzon ZLP32300 architecture (see Figure 1 on page 3) is based on Zilog's 8-bit microcontroller core with an Expanded Register File allowing access to register-mapped peripherals, input/output (I/O) circuits, and powerful counter/timer circuitry. The Z8® CPU offers a flexible I/O scheme, an efficient register and address space structure, and a number of ancillary features that are useful in many consumer, automotive, computer peripheral, and battery-operated hand-held applications.

There are three basic address spaces available to support a wide range of configurations:

1. Program Memory
2. Register File
3. Expanded Register File

The register file is composed of 256 Bytes of RAM. It includes four I/O port registers, 16 control and status registers, and 236 general-purpose registers. The Expanded Register File consists of two additional register groups (F and D).

To unburden the program from coping with such real-time problems as generating complex waveforms or receiving and demodulating complex waveform/pulses, the Crimzon ZLP32300 offers a new intelligent counter/timer architecture with 8-bit and 16-bit counter/timers (see Figure 2 on page 4). Also included are a large number of user-selectable modes and two on-board comparators to process analog signals with separate reference voltages.

Note: *All signals with an overline, "$\overline{}$", are active Low. For example, B/$\overline{W}$, in which WORD is active Low, and $\overline{B}$/W, in which BYTE is active Low.*

Power connections use the conventional descriptions listed in Table 1.

Table 1. Power Connections

Connection	Circuit	Device
Power	V_{CC}	V_{DD}
Ground	GND	V_{SS}

Development Features

Table 2 lists the features of Crimzon ZLP32300 family.

Table 2. Crimzon ZLP32300 MCU Features

Device	OTP(KB)	RAM* (Bytes)	I/O Lines	Voltage Range
Crimzon ZLP32300	8, 16, 32	237	32, 24 or 16	2.0–3.6 V
*General purpose				

The additional features include:

- Low power consumption–11 mW (typical)
- Three standby modes:
  - STOP—1.7 µA (typical)
  - HALT—0.6 mA (typical)
  - Low-voltage reset
- Special architecture to automate both generation and reception of complex pulses or signals:
  - One programmable 8-bit counter/timer with two capture registers and two load registers
  - One programmable 16-bit counter/timer with one 16-bit capture register pair and one 16-bit load register pair
  - Programmable input glitch filter for pulse reception
- Six priority interrupts
  - Three external
  - Two assigned to counter/timers
  - One Low-Voltage Detection interrupt
- Low-Voltage Detection and high voltage detection Flags
- Programmable Watchdog Timer/Power-On Reset (WDT/POR) circuits
- Two independent comparators with programmable interrupt polarity
- Programmable EPROM options
  - Port 0: 0–3 pull-up transistors
  - Port 0: 4–7 pull-up transistors
  - Port 1: 0–3 pull-up transistors
  - Port 1: 4–7 pull-up transistors

- Port 2: 0–7 pull-up transistors
- EPROM Protection
- WDT enabled at POR

Functional Block Diagram

Figure 1 displays the Crimzon ZLP32300 MCU functional block diagram.

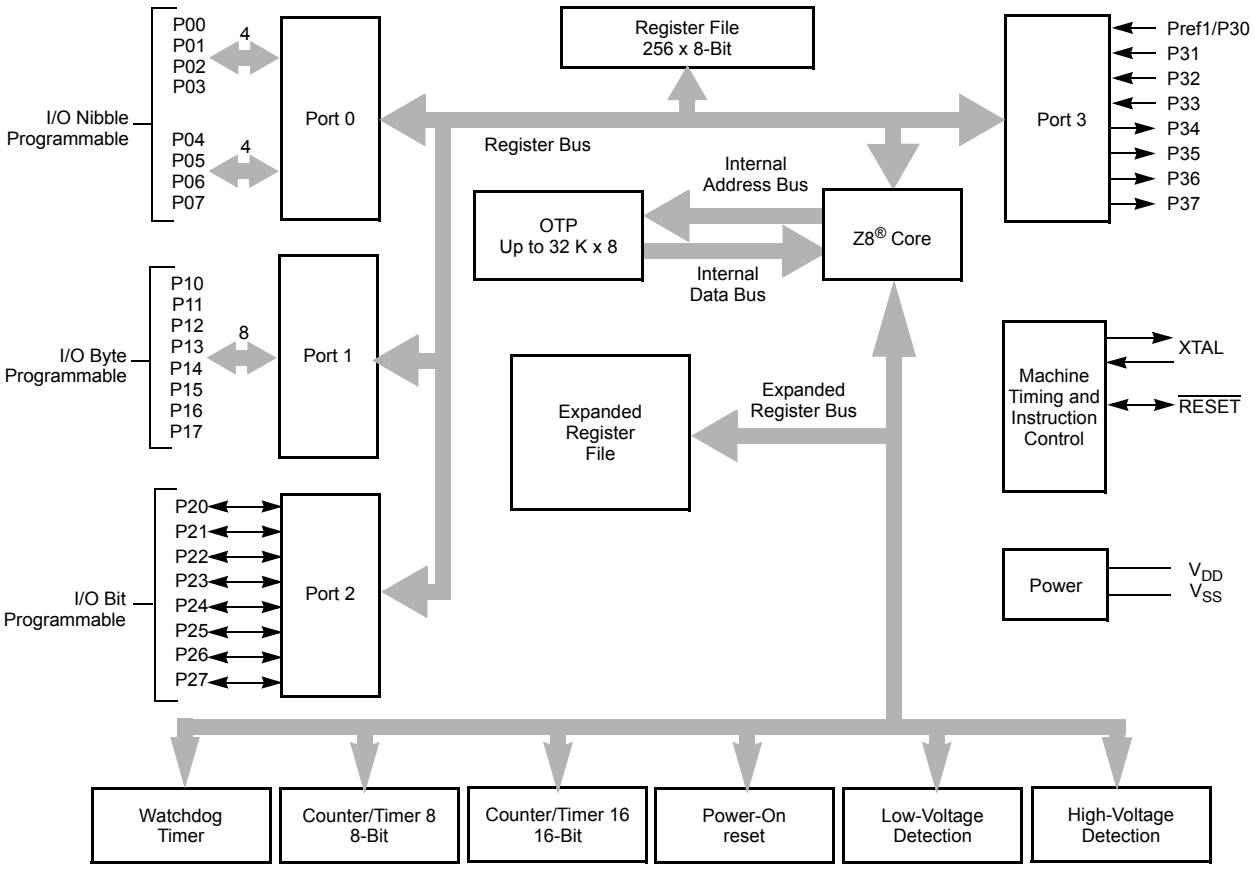

Note: Refer to the specific package for available pins.

Figure 1. Crimzon ZLP32300 MCU Functional Block Diagram

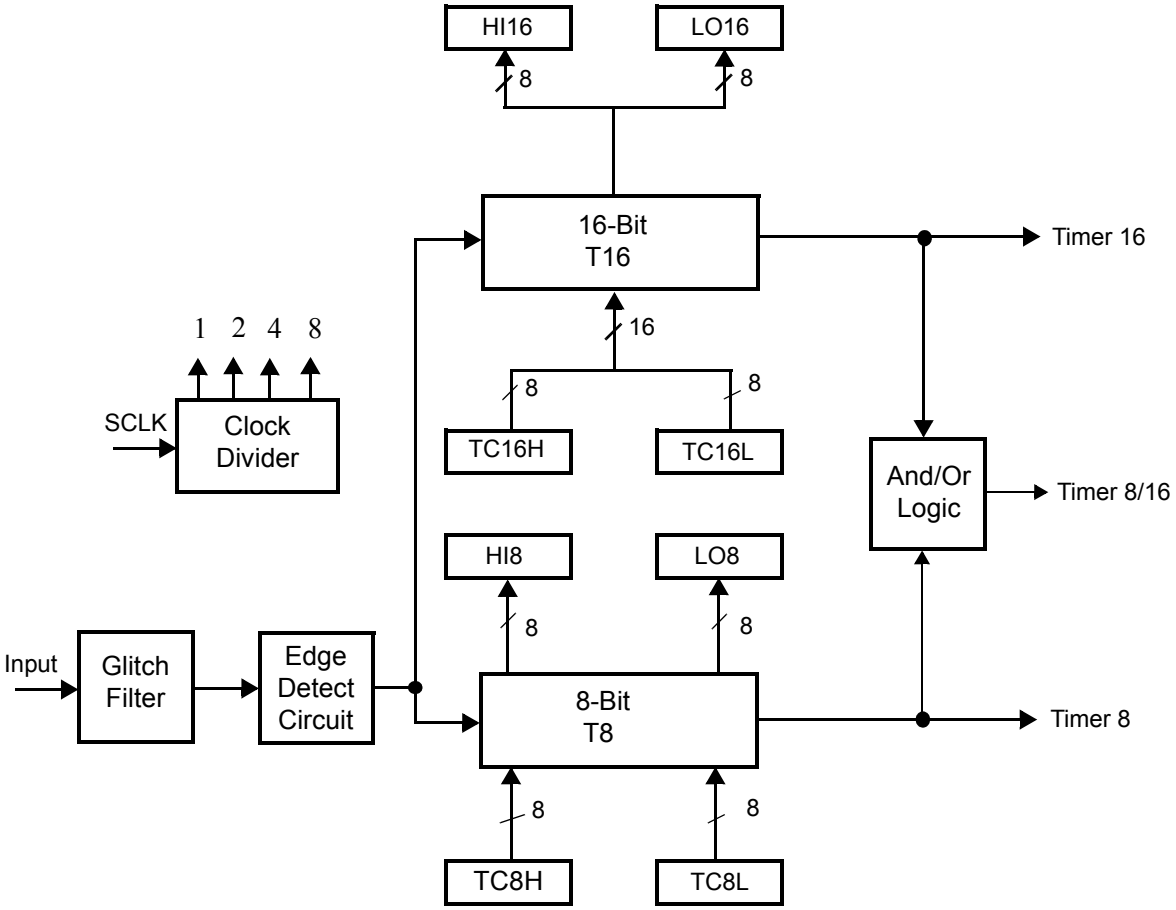

Figure 2. Counter/Timers Diagram

Pin Description

The pin configuration for the 20-pin PDIP/SOIC/SSOP is displayed in Figure 3 and described in Table 3. The pin configuration for the 28-pin PDIP/SOIC/SSOP are depicted in Figure 4 and described in Table 4. The pin configurations for the 40-pin PDIP and 48-pin SSOP versions are displayed in Figure 5, Figure 6, and described in Table 5.

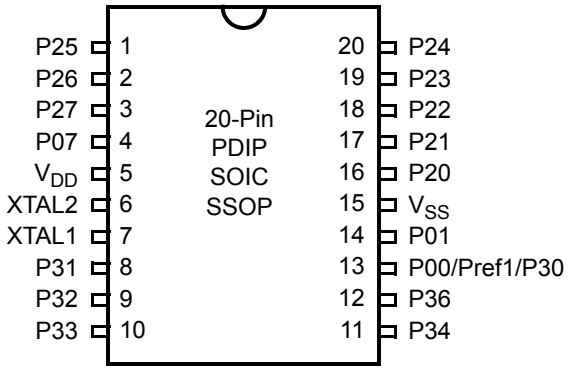

Figure 3. 20-Pin PDIP/SOIC/SSOP Pin Configuration

Table 3. 20-Pin PDIP/SOIC/SSOP Pin Identification

Pin No	Symbol	Function	Direction
1–3	P25–P27	Port 2, Bits 5,6,7	Input/Output
4	P07	Port 0, Bit 7	Input/Output
5	V_{DD}	Power Supply	
6	XTAL2	Crystal Oscillator Clock	Output
7	XTAL1	Crystal Oscillator Clock	Input
8–10	P31–P33	Port 3, Bits 1,2,3	Input
11,12	P34, P36	Port 3, Bits 4,6	Output
13	P00/Pref1/P30	Port 0, Bit 0/Analog reference input Port 3 Bit 0	Input/Output for P00 Input for Pref1/P30
14	P01	Port 0, Bit 1	Input/Output
15	V_{SS}	Ground	
16–20	P20–P24	Port 2, Bits 0,1,2,3,4	Input/Output

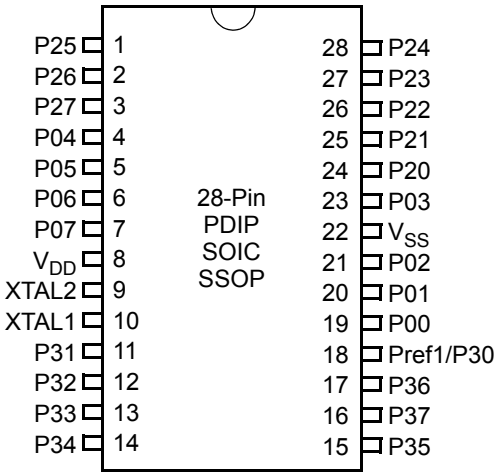

Figure 4. 28-Pin PDIP/SOIC/SSOP Pin Configuration

Table 4. 28-Pin PDIP/SOIC/SSOP Pin Identification

Pin No	Symbol	Direction	Description
1-3	P25-P27	Input/Output	Port 2, Bits 5, 6, 7
4-7	P04-P07	Input/Output	Port 0, Bits 4, 5, 6, 7
8	V_{DD}		Power supply
9	XTAL2	Output	Crystal, oscillator clock
10	XTAL1	Input	Crystal, oscillator clock
11-13	P31-P33	Input	Port 3, Bits 1, 2, 3
14	P34	Output	Port 3, Bit 4
15	P35	Output	Port 3, Bit 5
16	P37	Output	Port 3, Bit 7
17	P36	Output	Port 3, Bit 6
18	Pref1/P30 Port 3 Bit 0	Input	Analog ref input; connect to V_{CC} if not used Input for Pref1/P30
19-21	P00-P02	Input/Output	Port 0, Bits 0, 1, 2
22	V_{SS}		Ground
23	P03	Input/Output	Port 0, Bit 3
24-28	P20-P24	Input/Output	Port 2, Bits 0–4

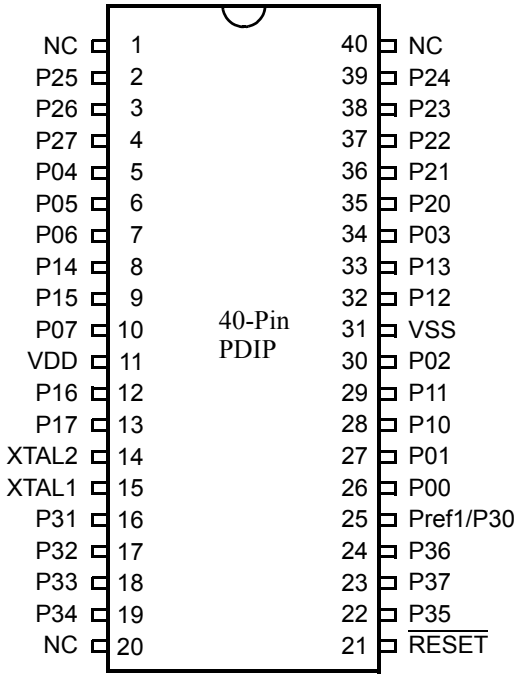

Figure 5. 40-Pin PDIP Pin Configuration

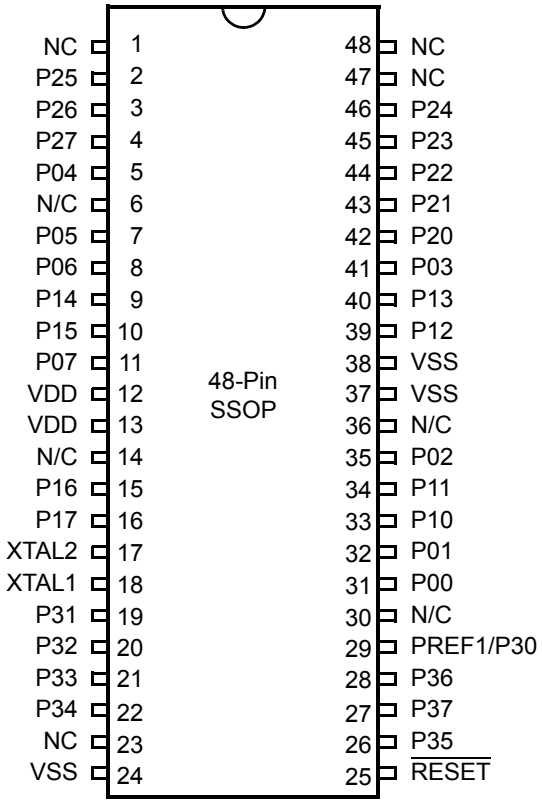

Figure 6. 48-Pin SSOP Pin Configuration

Table 5. 40- and 48-Pin Configuration

40-Pin PDIP No	48-Pin SSOP No	Symbol
26	31	P00
27	32	P01
30	35	P02
34	41	P03
5	5	P04
6	7	P05
7	8	P06
10	11	P07
28	33	P10
29	34	P11

Table 5. 40- and 48-Pin Configuration (Continued)

40-Pin PDIP No	48-Pin SSOP No	Symbol
32	39	P12
33	40	P13
8	9	P14
9	10	P15
12	15	P16
13	16	P17
35	42	P20
36	43	P21
37	44	P22
38	45	P23
39	46	P24
2	2	P25
3	3	P26
4	4	P27
16	19	P31
17	20	P32
18	21	P33
19	22	P34
22	26	P35
24	28	P36
23	27	P37
20	23	NC
40	47	NC
1	1	NC
21	25	$\overline{\text{RESET}}$
15	18	XTAL1
14	17	XTAL2
11	12, 13	V_{DD}
31	24, 37, 38	V_{SS}
25	29	Pref1/P30
	48	NC
	6	NC

Table 5. 40- and 48-Pin Configuration (Continued)

40-Pin PDIP No	48-Pin SSOP No	Symbol
	14	NC
	30	NC
	36	NC

Pin Functions

XTAL1 Crystal 1 (Time-Based Input)

This pin connects a parallel-resonant crystal or ceramic resonator to the on-chip oscillator input. Additionally, an optional external single-phase clock can be coded to the on-chip oscillator input.

XTAL2 Crystal 2 (Time-Based Output)

This pin connects a parallel-resonant crystal or ceramic resonant to the on-chip oscillator output.

Input/Output Ports

Caution: *The CMOS input buffer for each Port 0, 1, or 2 pin is always connected to the pin, even when the pin is configured as an output. If the pin is configured as an open-drain output and no external signal is applied, a High output state can cause the CMOS input buffer to float. This might lead to excessive leakage current of more than 100 µA. To prevent this leakage, connect the pin to an external signal with a defined logic level or ensure its output state is Low, especially during STOP mode.*

Internal pull-ups are disabled on any given pin or group of port pins when programmed into output mode.

Port 0, 1, and 2 have both input and output capability. The input logic is always present no matter whether the port is configured as input or output. When doing a READ instruction, the MCU reads the actual value at the input logic but not from the output buffer. In addition, the instructions of OR, AND, and XOR have the Read-Modify-Write sequence. The MCU first reads the port, and then modifies the value and load back to the port.

Precaution must be taken if the port is configured as open-drain output or if the port is driving any circuit that makes the voltage different from the desired output logic. For example, pins P00–P07 are not connected to anything else. If it is configured as

open-drain output with output logic as ONE, it is a floating port and reads back as ZERO. The following instruction sets P00-P07 all Low.

```
AND P0,#%F0
```

Port 0 (P00–P07)

Port 0 is an 8-bit, bidirectional, CMOS-compatible port. These eight I/O lines are configured under software control as a nibble I/O port. The output drivers are push-pull or open-drain controlled by bit D2 in the PCON register.

If one or both nibbles are needed for I/O operation, they must be configured by writing to the Port 01 mode register (P01M). After a hardware reset or Stop Mode Recovery, Port 0 is configured as an input port.

An optional pull-up transistor is available as a OTP option bit on all Port 0 bits with nibble select.

Note: *The Port 0 direction is reset to be input following an SMR.*

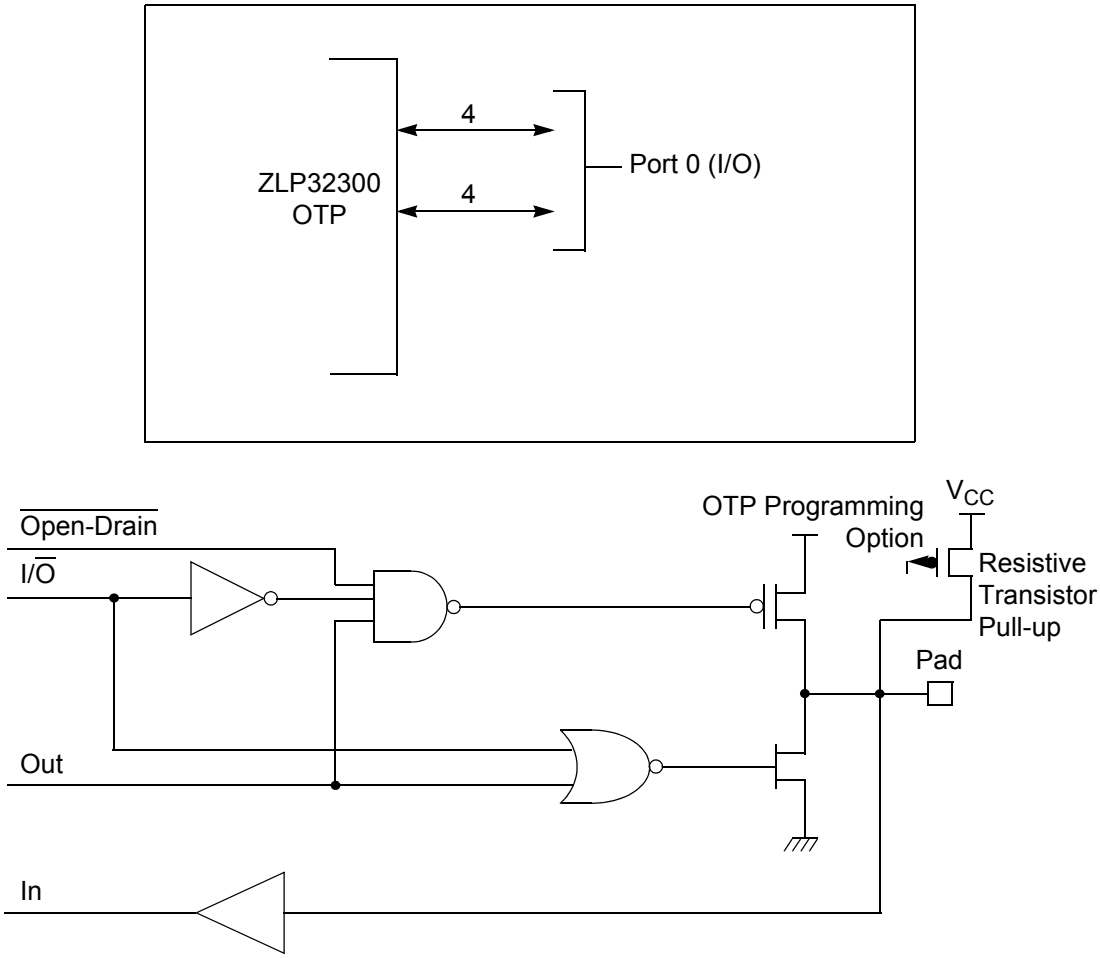

Figure 7. Port 0 Configuration

Port 1 (P17–P10)

Port 1 can be configured for standard port input or output mode (see Figure 8). After POR or Stop Mode Recovery, Port 1 is configured as an input port. The output drivers are either push-pull or open-drain and are controlled by bit D1 in the PCON register.

Notes:
1. *The Port 1 direction is reset to be input following an SMR.*
2. *In 20- and 28-pin packages, Port 1 is reserved. A write to this register will have no effect and will always read FF.*

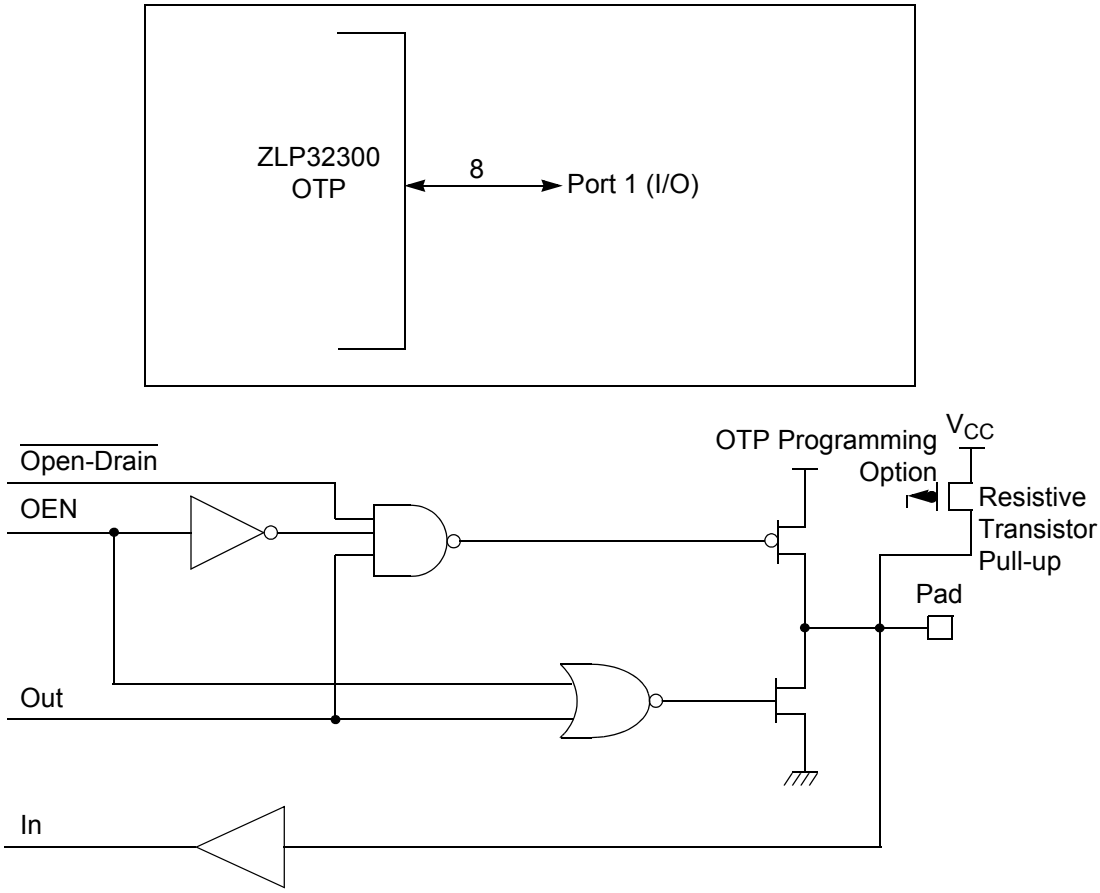

Figure 8. Port 1 Configuration

Port 2 (P27–P20)

Port 2 is an 8-bit, bidirectional, CMOS-compatible I/O port (see Figure 9). These eight I/O lines can be independently configured under software control as inputs or outputs. Port 2 is always available for I/O operation. A EPROM option bit is available to connect eight pull-up transistors on this port. Bits programmed as outputs are globally programmed as either push-pull or open-drain. The POR resets with the eight bits of Port 2 configured as inputs.

Port 2 also has an 8-bit input OR and AND gate, which can be used to wake up the part. P20 can be programmed to access the edge-detection circuitry in DEMODULATION mode.

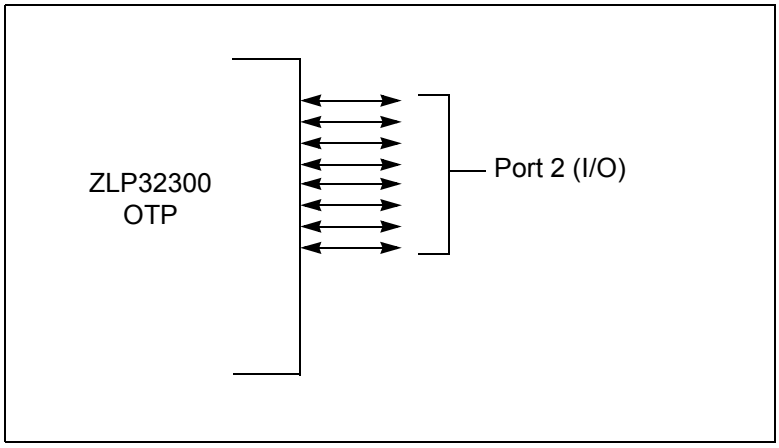

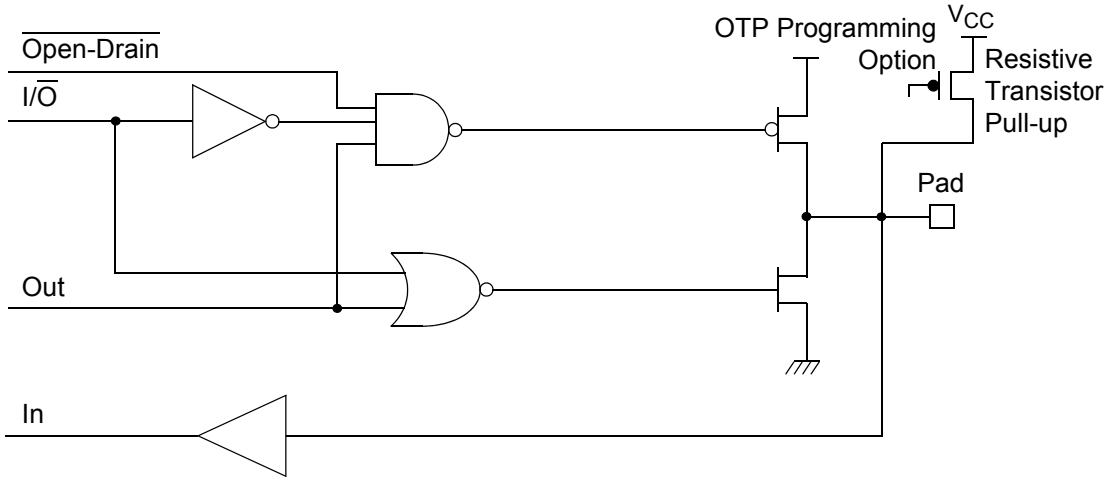

Figure 9. Port 2 Configuration

Port 3 (P37–P30)

Port 3 is a 8-bit, CMOS-compatible fixed I/O port (see Figure 10). Port 3 consists of four fixed input (P33–P30) and four fixed output (P37–P34), which can be configured under software control for interrupt and as output from the counter/timers. P30, P31, P32, and P33 are standard CMOS inputs; P34, P35, P36, and P37 are push-pull outputs.

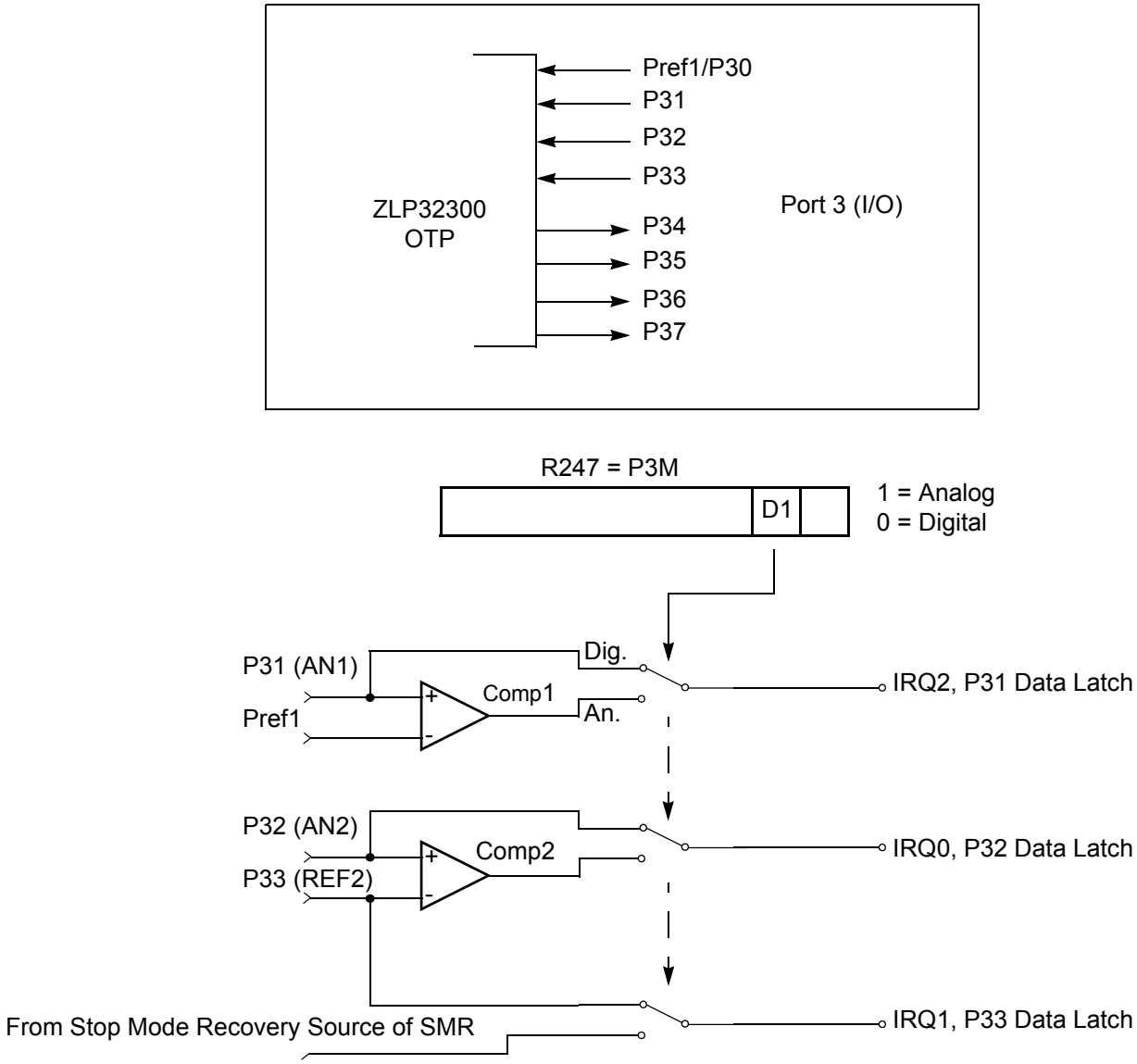

Figure 10. Port 3 Configuration

Two on-board comparators process analog signals on P31 and P32, with reference to the voltage on Pref1 and P33. The Analog function is enabled by programming the Port 3 Mode Register (bit 1). P31 and P32 are programmable as rising, falling, or both edge triggered interrupts (IRQ register bits 6 and 7). Pref1 and P33 are the comparator reference voltage inputs. Access to the Counter Timer edge-detection circuit is through P31 or P20

(see T8 and T16 Common Functions—CTR1(0D)01h on page 28). Other edge detect and IRQ modes are described in Table 6.

Note: *Comparators are powered down by entering STOP mode. For P31–P33 to be used in a Stop Mode Recovery source, these inputs must be placed into DIGITAL mode.*

Table 6. Port 3 Pin Function Summary

Pin	I/O	Counter/Timers	Comparator	Interrupt
Pref1/P30	IN		RF1	
P31	IN	IN	AN1	IRQ2
P32	IN		AN2	IRQ0
P33	IN		RF2	IRQ1
P34	OUT	T8	AO1	
P35	OUT	T16		
P36	OUT	T8/16		
P37	OUT		AO2	
P20	I/O	IN		

Port 3 also provides output for each of the counter/timers and the AND/OR Logic (see Figure 11). Control is performed by programming bits D5–D4 of CTR1, bit 0 of CTR0, and bit 0 of CTR2.

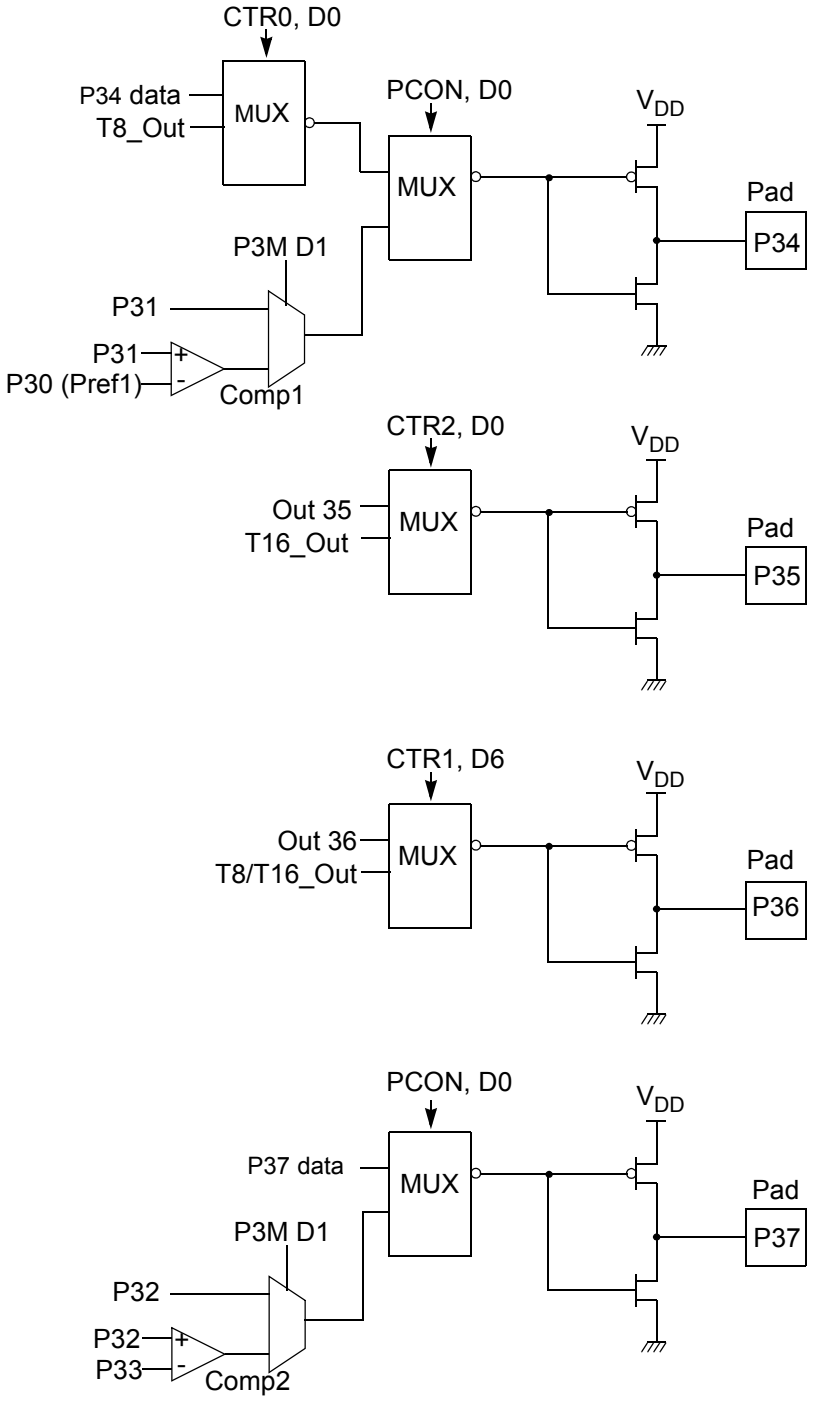

Figure 11. Port 3 Counter/Timer Output Configuration

Comparator Inputs

In ANALOG mode, P31 and P32 have a comparator front end. The comparator reference is supplied to P33 and Pref1. In this mode, the P33 internal data latch and its corresponding IRQ1 are diverted to the SMR sources (excluding P31, P32, and P33) as displayed in Figure 10 on page 15. In DIGITAL mode, P33 is used as D3 of the Port 3 input register, which then generates IRQ1.

Note: *Comparators are powered down by entering STOP mode. For P31–P33 to be used in a Stop Mode Recovery source, these inputs must be placed into DIGITAL mode.*

Comparator Outputs

These channels can be programmed to be output on P34 and P37 through the PCON register.

$\overline{\text{RESET}}$ (Input, Active Low)

Reset initializes the MCU and is accomplished either through Power-On, Watchdog Timer, Stop Mode Recovery, Low-Voltage detection, or external reset. During Power-On Reset and Watchdog Timer Reset, the internally generated reset drives the reset pin Low for the POR time. Any devices driving the external reset line must be open-drain to avoid damage from a possible conflict during reset conditions. Pull-up is provided internally.

When the ZLP32300 asserts (Low) the $\overline{\text{RESET}}$ pin, the internal pull-up is disabled. The ZLP32300 does not assert the $\overline{\text{RESET}}$ pin when under VBO.

Note: *The external Reset does not initiate an exit from STOP mode.*

Functional Description

This device incorporates special functions to enhance the Z8 functionality in consumer and battery-operated applications.

Program Memory

This device addresses 32 KB of OTP memory. The first 12 bytes are reserved for interrupt vectors. These locations contain the six 16-bit vectors that correspond to the six available interrupts. See Figure 12.

RAM

This device features 256 B of RAM.

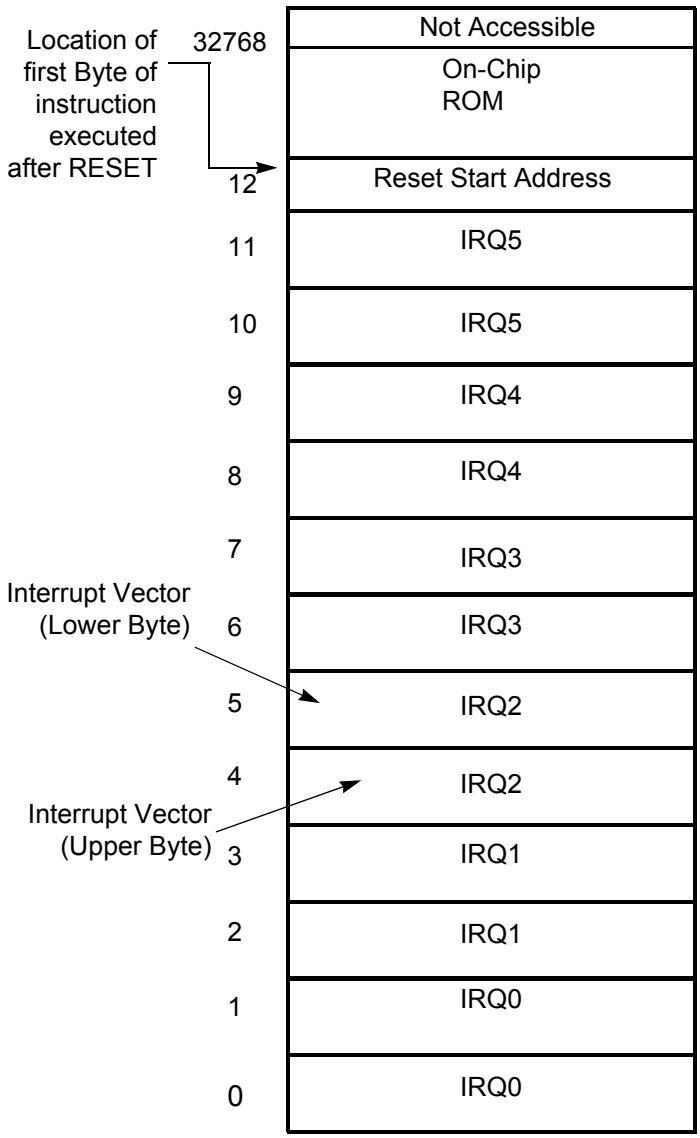

Figure 12. Program Memory Map (32 K OTP)

Expanded Register File

The register file has been expanded to allow for additional system control registers and for mapping of additional peripheral devices into the register address area. The Z8 register address space (R0 through R15) has been implemented as 16 banks, with 16 registers per bank. These register groups are known as the ERF (Expanded Register File). Bits 7–4 of

register RP select the working register group. Bits 3–0 of register RP select the expanded register file bank.

Note: *An expanded register bank is also referred to as an expanded register group (see* Figure 13*).*

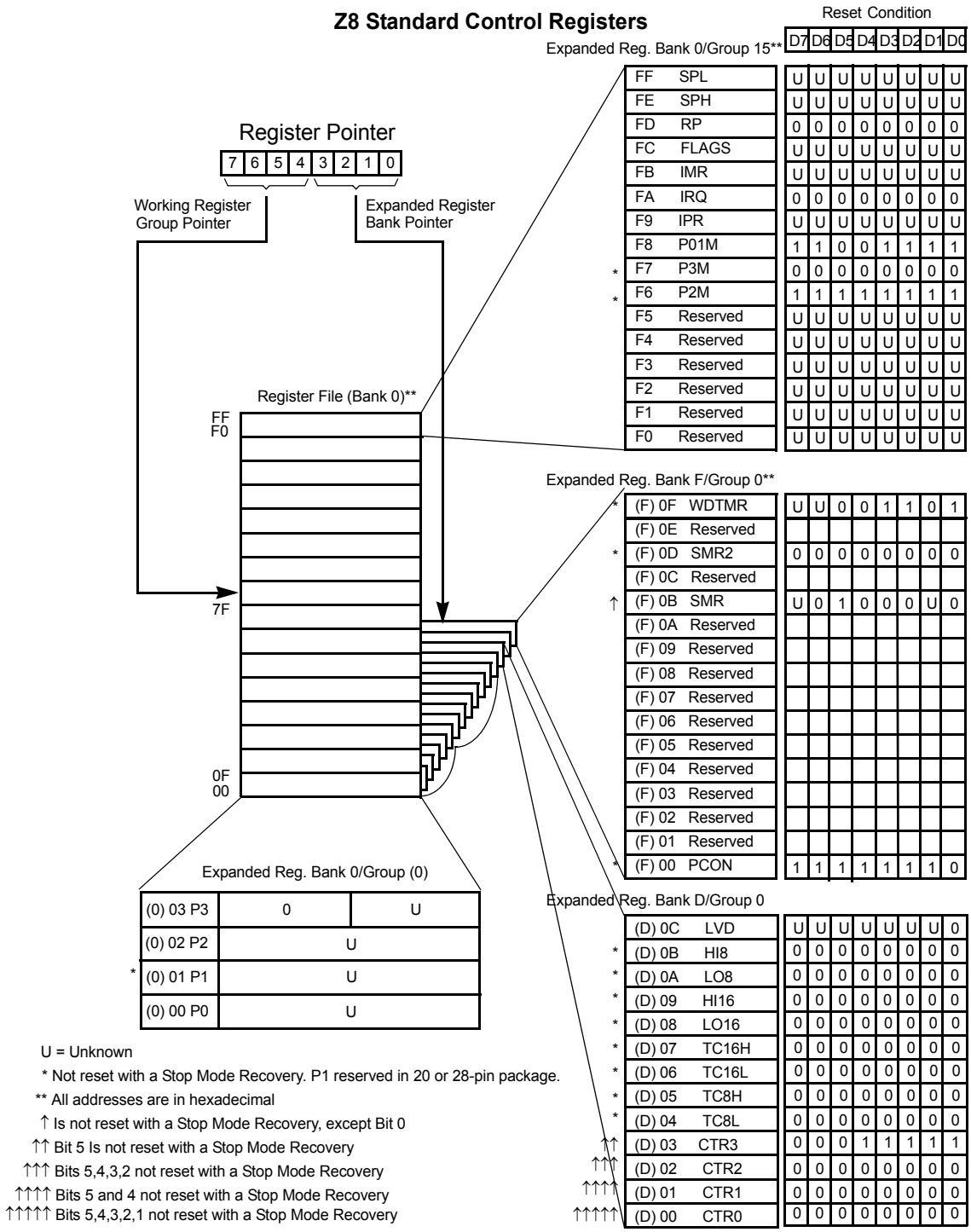

Figure 13. Expanded Register File Architecture

The upper nibble of the register pointer (see Figure 14) selects which working register group, of 16 bytes in the register file, is accessed out of the possible 256. The lower nibble selects the expanded register file bank and, in the case of the Crimzon ZLP32300 family, banks 0, F, and D are implemented. A `0h` in the lower nibble allows the normal register file (bank 0) to be addressed. Any other value from `1h` to `Fh` exchanges the lower 16 registers to an expanded register bank.

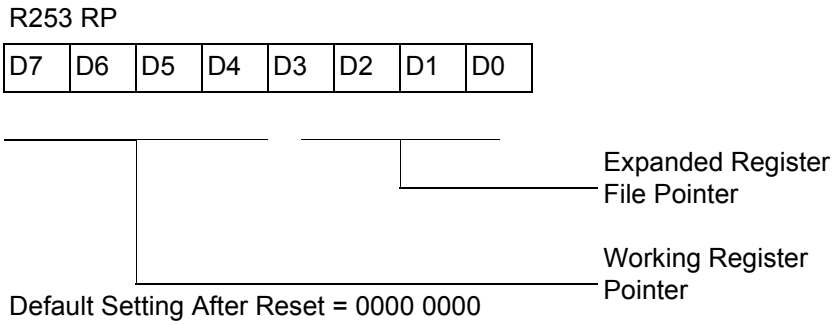

Figure 14. Register Pointer

Example: Crimzon ZLP32300 (see Figure 13 on page 22)

R253 RP = 00h
R0 = Port 0
R1 = Port 1
R2 = Port 2
R3 = Port 3

But if:

R253 RP = 0Dh
R0 = CTR0
R1 = CTR1
R2 = CTR2
R3 = CTR3

The counter/timers are mapped into ERF group D. Access is easily performed using the following:

```
LD                      RP, #0Dh                ; Select ERF D
for access to bank D
                                                ; (working
register group 0)
LD                      R0,#xx                  ; load CTR0
LD                      1, #xx                  ; load CTR1
```

```
LD                      R1, 2                   ; CTR2→CTR1

LD                      RP, #0Dh                ; Select ERF D
for access to bank D
                                                ; (working
register group 0)
LD                      RP, #7Dh                ; Select
expanded register bank D and working            ; register
group 7 of bank 0 for access.
LD                      71h, 2
; CTRL2→register 71h
LD                      R1, 2
; CTRL2→register 71h
```

Register File

The register file (bank 0) consists of 4 I/O port registers, 237 general-purpose registers, 16 control and status registers (R0–R3, R4–R239, and R240–R255, respectively), and two expanded registers groups in Banks D (see Table 7 on page 27) and F. Instructions can access registers directly or indirectly through an 8-bit address field, thereby allowing a short, 4-bit register address to use the Register Pointer (see Figure 15). In the 4-bit mode, the register file is divided into 16 working register groups, each occupying 16 continuous locations. The Register Pointer addresses the starting location of the active working register group.

Note: *Working register group E0–EF can only be accessed through working registers and indirect addressing modes.*

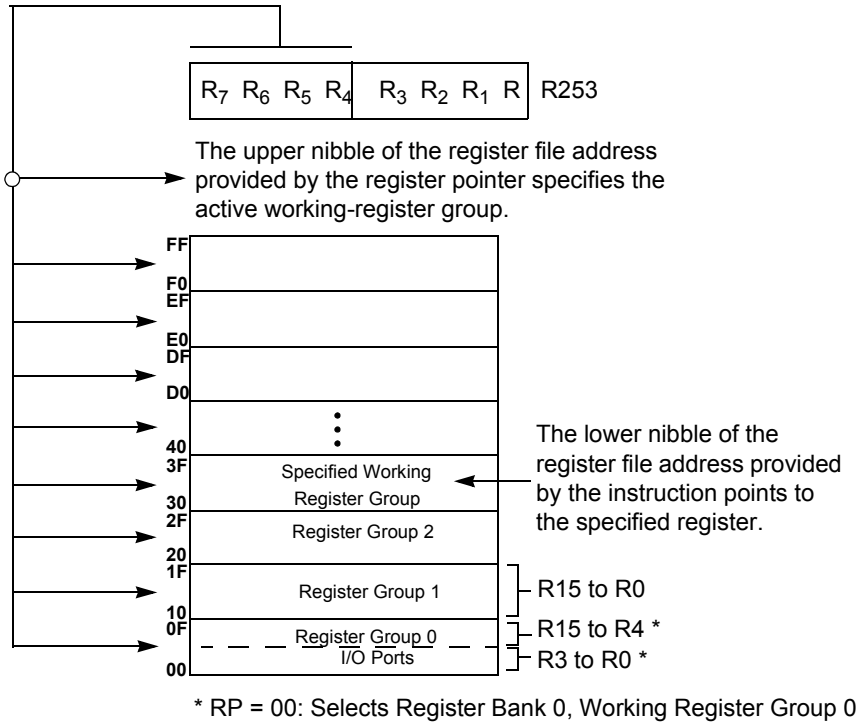

Figure 15. Register Pointer—Detail

Stack

The internal register file is used for the stack. An 8-bit Stack Pointer SPL (R255) is used for the internal stack that resides in the general-purpose registers (R4–R239). SPH (R254) can be used as a general-purpose register.

Timers

T8_Capture_HI—HI8(D)0Bh

This register holds the captured data from the output of the 8-bit Counter/Timer0. Typically, this register holds the number of counts when the input signal is 1.

Field	Bit Position		Description
T8_Capture_HI	[7:0]	R/W	Captured Data—No Effect

T8_Capture_LO—L08(D)0Ah

This register holds the captured data from the output of the 8-bit Counter/Timer0. Typically, this register holds the number of counts when the input signal is 0.

Field	Bit Position		Description
T8_Capture_L0	[7:0]	R/W	Captured Data—No Effect

T16_Capture_HI—HI16(D)09h

This register holds the captured data from the output of the 16-bit Counter/Timer16. This register holds the MS-Byte of the data.

Field	Bit Position		Description
T16_Capture_HI	[7:0]	R/W	Captured Data—No Effect

T16_Capture_LO—L016(D)08h

This register holds the captured data from the output of the 16-bit Counter/Timer16. This register holds the LS-Byte of the data.

Field	Bit Position		Description
T16_Capture_LO	[7:0]	R/W	Captured Data—No Effect

Counter/Timer2 MS-Byte Hold Register—TC16H(D)07h

Field	Bit Position		Description
T16_Data_HI	[7:0]	R/W	Data

Counter/Timer2 LS-Byte Hold Register—TC16L(D)06h

Field	Bit Position		Description
T16_Data_LO	[7:0]	R/W	Data

Counter/Timer8 High Hold Register—TC8H(D)05h

Field	Bit Position		Description
T8_Level_HI	[7:0]	R/W	Data

Counter/Timer8 Low Hold Register—TC8L(D)04h

Field	Bit Position		Description
T8_Level_LO	[7:0]	R/W	Data

CTR0 Counter/Timer8 Control Register—CTR0(D)00h

Table 7 lists and briefly describes the fields for this register.

Table 7. CTR0(D)00h Counter/Timer8 Control Register

Field	Bit Position		Value	Description
T8_Enable	7-------	R/W	0* 1 0 1	Counter Disabled Counter Enabled Stop Counter Enable Counter
Single/Modulo-N	-6-------	R/W	0* 1	Modulo-N Single Pass
Time_Out	--5------	R/W	0** 1 0 1	No Counter Time-Out Counter Time-Out Occurred No Effect Reset Flag to 0
T8 _Clock	---43---	R/W	0 0** 0 1 1 0 1 1	SCLK SCLK/2 SCLK/4 SCLK/8
Capture_INT_Mask	-----2--	R/W	0** 1	Disable Data Capture Interrupt Enable Data Capture Interrupt
Counter_INT_Mask	------1-	R/W	0** 1	Disable Time-Out Interrupt Enable Time-Out Interrupt
P34_Out	-------0	R/W	0* 1	P34 as Port Output T8 Output on P34

*Indicates the value upon Power-On Reset.
**Indicates the value upon Power-On Reset. Not reset with a Stop Mode Recovery.

T8 Enable

This field enables T8 when set (written) to 1.

Single/Modulo-N

When set to 0 (Modulo-N), the counter reloads the initial value when the terminal count is reached. When set to 1 (single-pass), the counter stops when the terminal count is reached.

Timeout

This bit is set when T8 times out (terminal count reached). To reset this bit, write a 1 to its location.

Caution: *Writing a 1 is the only way to reset the Terminal Count status condition. Reset this bit before using/enabling the counter/timers. The first clock of T8 might not have complete clock width and can occur any time when enabled.*

Note: *Ensure to manipulate CTR0, bit 5 and CTR1, bits 0 and 1 (DEMODULATION mode) when using the OR or AND commands. These instructions use a Read-Modify-Write sequence in which the current status from the CTR0 and CTR1 registers is ORed or ANDed with the designated value and then written back into the registers.*

T8 Clock

These bits define the frequency of the input signal to T8.

Capture_INT_Mask

Set this bit to allow an interrupt when data is captured into either LO8 or HI8 upon a positive or negative edge detection in DEMODULATION mode.

Counter_INT_Mask

Set this bit to allow an interrupt when T8 has a timeout.

P34_Out

This bit defines whether P34 is used as a normal output pin or the T8 output.

T8 and T16 Common Functions—CTR1(0D)01h

This register controls the functions in common with the T8 and T16.

Table 8 lists and briefly describes the fields for this register.

Table 8. CTR1(0D)01h T8 and T16 Common Functions

Field	Bit Position		Value	Description
Mode	7-------	R/W	0*	TRANSMIT Mode
			1	DEMODULATION Mode
P36_Out/	-6------	R/W		TRANSMIT Mode
Demodulator_Input			0*	Port Output
			1	T8/T16 Output
				DEMODULATION Mode
			0*	P31
			1	P20
T8/T16_Logic/	--54----	R/W		TRANSMIT Mode
Edge _Detect			00**	AND
			01	OR
			10	NOR
			11	NAND
				DEMODULATION Mode
			00**	Falling Edge
			01	Rising Edge
			10	Both Edges
			11	Reserved
Transmit_Submode/	----32--	R/W		TRANSMIT Mode
Glitch_Filter			00*	Normal Operation
			01	PING-PONG Mode
			10	T16_Out = 0
			11	T16_Out = 1
				DEMODULATION Mode
			00*	No Filter
			01	4 SCLK Cycle
			10	8 SCLK Cycle
			11	Reserved
Initial_T8_Out/	------1-			TRANSMIT Mode
Rising Edge		R/W	0*	T8_OUT is 0 Initially
			1	T8_OUT is 1 Initially
				DEMODULATION Mode
		R	0*	No Rising Edge
			1	Rising Edge Detected
		W	0	No Effect
			1	Reset Flag to 0

Table 8. CTR1(0D)01h T8 and T16 Common Functions (Continued)

Field	Bit Position		Value	Description
Initial_T16_Out/ Falling_Edge	-------0			TRANSMIT Mode
		R/W	0*	T16_OUT is 0 Initially
			1	T16_OUT is 1 Initially
				DEMODULATION Mode
		R	0*	No Falling Edge
			1	Falling Edge Detected
		W	0	No Effect
			1	Reset Flag to 0

*Default at Power-On Reset
**Default at Power-On Reset. Not reset with a Stop Mode Recovery.

Mode

If the result is 0, the counter/timers are in TRANSMIT mode; otherwise, they are in DEMODULATION mode.

P36_Out/Demodulator_Input

In TRANSMIT mode, this bit defines whether P36 is used as a normal output pin or the combined output of T8 and T16.

In DEMODULATION mode, this bit defines whether the input signal to the Counter/Timers is from P20 or P31.

If the input signal is from Port 31, a capture event may also generate an IRQ2 interrupt. To prevent generating an IRQ2, either disable the IRQ2 interrupt by clearing its IMR bit D2 or use P20 as the input.

T8/T16_Logic/Edge _Detect

In TRANSMIT mode, this field defines how the outputs of T8 and T16 are combined (AND, OR, NOR, NAND).

In DEMODULATION mode, this field defines which edge should be detected by the edge detector.

Transmit_Submode/Glitch Filter

In TRANSMIT mode, this field defines whether T8 and T16 are in the PING-PONG mode or in independent normal operation mode. Setting this field to normal operation mode terminates the ‘PING-PONG Mode’ operation. When set to 10, T16 is immediately forced to a 0; a setting of 11 forces T16 to output a 1.

In DEMODULATION mode, this field defines the width of the glitch that must be filtered out.

Initial_T8_Out/Rising_Edge

In TRANSMIT mode, if 0, the output of T8 is set to 0 when it starts to count. If 1, the output of T8 is set to 1 when it starts to count. When the counter is not enabled and this bit is set to 1 or 0, T8_OUT is set to the opposite state of this bit. This ensures that when the clock is enabled, a transition occurs to the initial state set by CTR1, D1.

In DEMODULATION mode, this bit is set to 1 when a rising edge is detected in the input signal. In order to reset the mode, a 1 should be written to this location.

Initial_T16 Out/Falling _Edge

In TRANSMIT mode, if it is 0, the output of T16 is set to 0 when it starts to count. If it is 1, the output of T16 is set to 1 when it starts to count. This bit is effective only in Normal or PING-PONG mode (CTR1, D3; D2). When the counter is not enabled and this bit is set, T16_OUT is set to the opposite state of this bit. This ensures that when the clock is enabled, a transition occurs to the initial state set by CTR1, D0.

In DEMODULATION mode, this bit is set to 1 when a falling edge is detected in the input signal. In order to reset it, a 1 should be written to this location.

Note: *Modifying CTR1 (D1 or D0) while the counters are enabled causes unpredictable output from T8/16_OUT.*

CTR2 Counter/Timer 16 Control Register—CTR2(D)02h

Table 9 lists and briefly describes the fields for this register.

Table 9. CTR2(D)02h: Counter/Timer16 Control Register

Field	Bit Position		Value	Description
T16_Enable	7 - - - - - - -	R	0*	Counter Disabled
			1	Counter Enabled
		W	0	Stop Counter
			1	Enable Counter
Single/Modulo-N	- 6 - - - - - -	R/W		TRANSMIT Mode
			0*	Modulo-N
			1	Single Pass
				DEMODULATION Mode
			0	T16 Recognizes Edge
			1	T16 Does Not Recognize Edge
Time_Out	- - 5 - - - - -	R	0*	No Counter Timeout
			1	Counter Timeout Occurred
		W	0	No Effect
			1	Reset Flag to 0

Table 9. CTR2(D)02h: Counter/Timer16 Control Register (Continued)

Field	Bit Position		Value	Description
T16 _Clock	---43---	R/W	00** 01 10 11	SCLK SCLK/2 SCLK/4 SCLK/8
Capture_INT_Mask	-----2--	R/W	0** 1	Disable Data Capture Int. Enable Data Capture Int.
Counter_INT_Mask	------1-	R/W	0 1	Disable Timeout Int. Enable Timeout Int.
P35_Out	-------0	R/W	0* 1	P35 as Port Output T16 Output on P35

*Indicates the value upon Power-On Reset.
**Indicates the value upon Power-On Reset. Not reset with a Stop Mode Recovery.

T16_Enable

This field enables T16 when set to 1.

Single/Modulo-N

In TRANSMIT mode, when set to 0, the counter reloads the initial value when it reaches the terminal count. When set to 1, the counter stops when the terminal count is reached.

In DEMODULATION mode, when set to 0, T16 captures and reloads on detection of all the edges. When set to 1, T16 captures and detects on the first edge but ignores the subsequent edges. For details, see T16 DEMODULATION Mode on page 41.

Time_Out

This bit is set when T16 times out (terminal count reached). To reset the bit, write a 1 to this location.

T16_Clock

This bit defines the frequency of the input signal to Counter/Timer16.

Capture_INT_Mask

This bit is set to allow an interrupt when data is captured into LO16 and HI16.

Counter_INT_Mask

Set this bit to allow an interrupt when T16 times out.

P35_Out

This bit defines whether P35 is used as a normal output pin or T16 output.

CTR3 T8/T16 Control Register—CTR3(D)03h

Table 10 lists and briefly describes the fields for this register. This register allows the T_8 and T_{16} counters to be synchronized.

Table 10.CTR3 (D)03h: T8/T16 Control Register

Field	Bit Position		Value	Description
T_{16} Enable	7-------	R	0*	Counter Disabled
		R	1	Counter Enabled
		W	0	Stop Counter
		W	1	Enable Counter
T_8 Enable	-6------	R	0*	Counter Disabled
		R	1	Counter Enabled
		W	0	Stop Counter
		W	1	Enable Counter
Sync Mode	--5-----	R/W	0**	Disable Sync Mode
			1	Enable Sync Mode
Reserved	---43210	R	1	Always reads 11111
		W	x	No Effect

*Indicates the value upon Power-On Reset.
**Indicates the value upon Power-On Reset. Not reset with a Stop Mode Recovery.

Counter/Timer Functional Blocks

Input Circuit

The edge detector monitors the input signal on P31 or P20. Based on CTR1 D5–D4, a pulse is generated at the Pos Edge or Neg Edge line when an edge is detected. Glitches in the input signal that have a width less than specified (CTR1 D3, D2) are filtered out (see Figure 16).

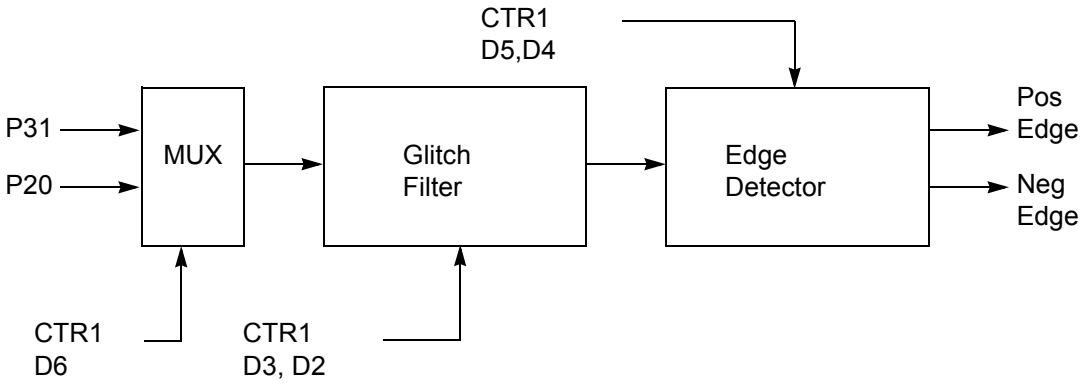

Figure 16. Glitch Filter Circuitry

T8 TRANSMIT Mode

Before T8 is enabled, the output of T8 depends on CTR1, D1. If it is 0, T8_OUT is 1; if it is 1, T8_OUT is 0. See Figure 17.

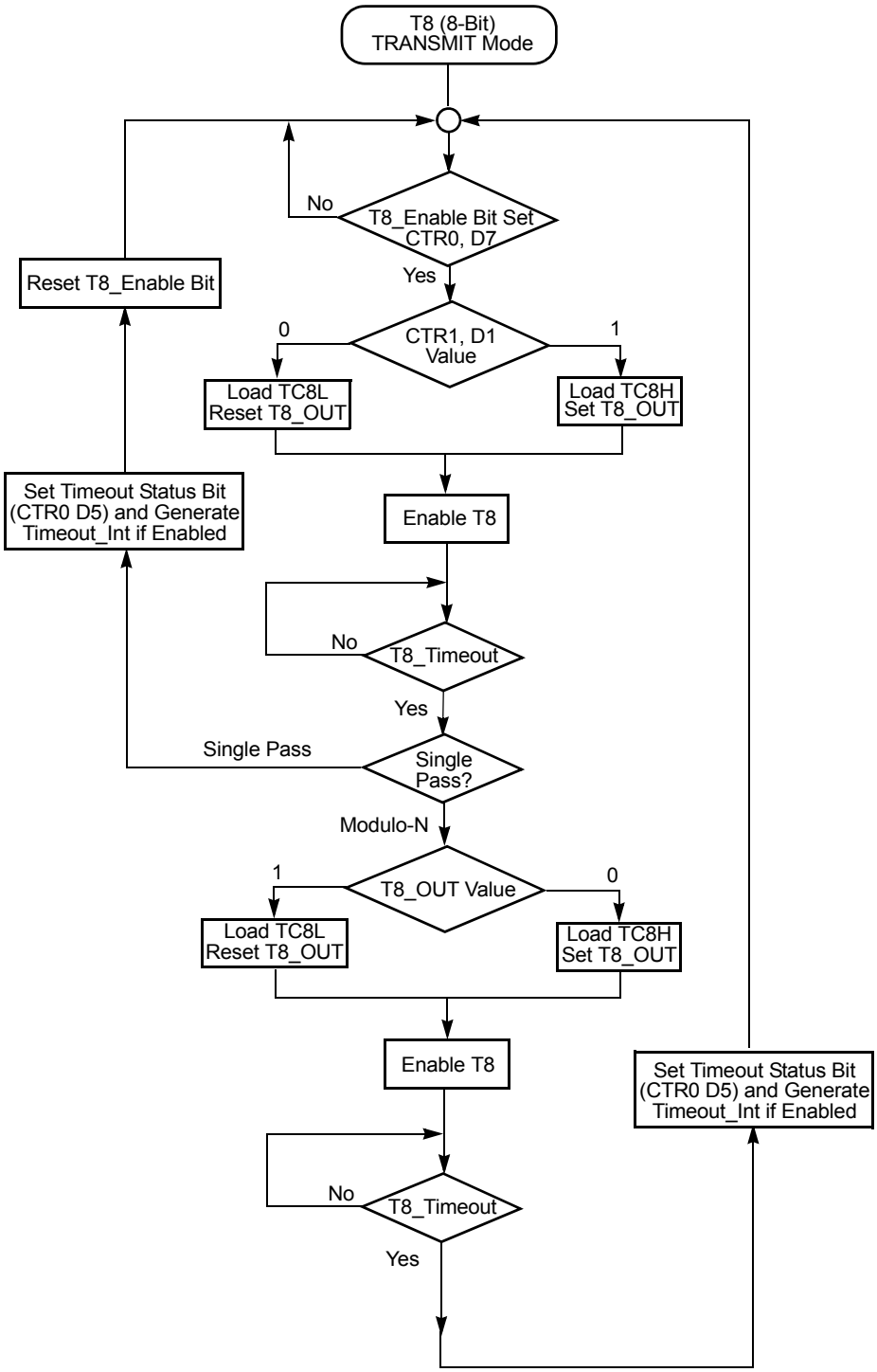

Figure 17. TRANSMIT Mode Flowchart

When T8 is enabled, the output T8_OUT switches to the initial value (CTR1, D1). If the initial value (CTR1, D1) is 0, TC8L is loaded; otherwise, TC8H is loaded into the counter. In SINGLE-PASS mode (CTR0, D6), T8 counts down to 0 and stops, T8_OUT toggles, the time-out status bit (CTR0, D5) is set, and a time-out interrupt can be generated if it is enabled (CTR0, D1). In MODULO-N mode, upon reaching terminal count, T8_OUT is toggled, but no interrupt is generated. From that point, T8 loads a new count (if the T8_OUT level now is 0), TC8L is loaded; if it is 1, TC8H is loaded. T8 counts down to 0, toggles T8_OUT, and sets the time-out status bit (CTR0, D5), thereby generating an interrupt if enabled (CTR0, D1). One cycle is thus completed. T8 then loads from TC8H or TC8L according to the T8_OUT level and repeats the cycle, see Figure 18.

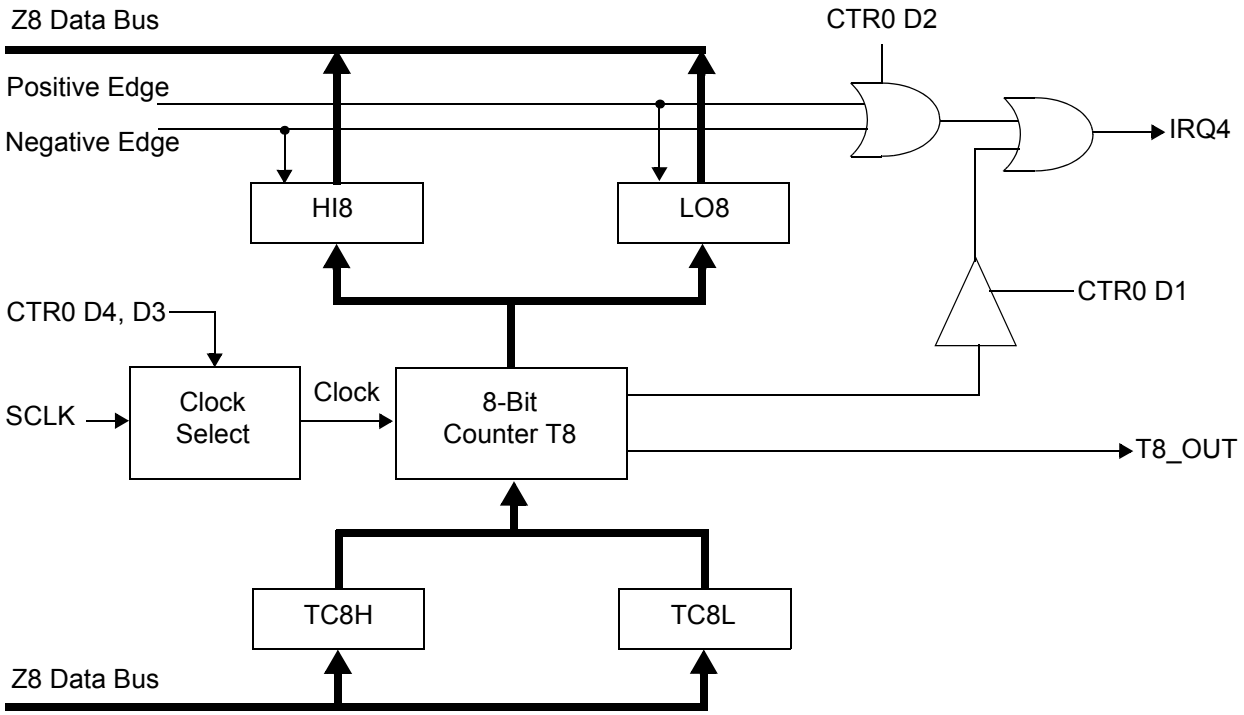

Figure 18. 8-Bit Counter/Timer Circuits

You can modify the values in TC8H or TC8L at any time. The new values take effect when they are loaded.

Caution: *To ensure known operation do not write these registers at the time the values are to be loaded into the counter/timer. An initial count of 1 is not allowed (a non-function occurs). An initial count of 0 causes TC8 to count from 0 to* FFh *to* FEh.

Note: *The letter* h *denotes hexadecimal values.*

Transition from 0 to FFh is not a timeout condition.

Caution: *Using the same instructions for stopping the counter/timers and setting the status bits is not recommended.*

Two successive commands are necessary. First, the counter/timers must be stopped. Second, the status bits must be reset. These commands are required because it takes one counter/timer clock interval for the initiated event to actually occur, see Figure 19 and Figure 20.

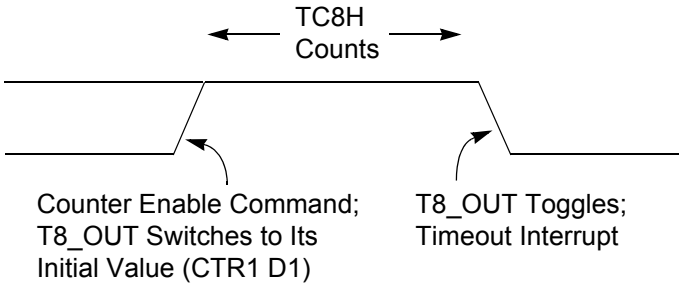

Figure 19. T8_OUT in SINGLE-PASS Mode

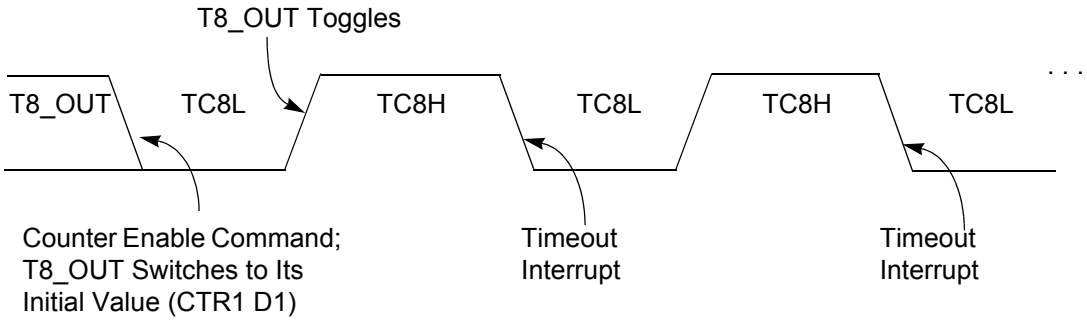

Figure 20. T8_OUT in MODULO-N Mode

T8 DEMODULATION Mode

You must program TC8L and TC8H to FFh. After T8 is enabled, when the first edge (rising, falling, or both depending on CTR1, D5; D4) is detected, it starts to count down. When a subsequent edge (rising, falling, or both depending on CTR1, D5; D4) is detected during counting, the current value of T8 is complemented and put into one of the capture registers. If it is a positive edge, data is put into LO8; if it is a negative edge, data is put into HI8. From that point, one of the edge detect status bits (CTR1, D1; D0) is set, and an interrupt can be generated if enabled (CTR0, D2). Meanwhile, T8 is loaded with FFh and starts counting again. If T8 reaches 0, the time-out status bit (CTR0, D5) is set, and an

interrupt can be generated if enabled (CTR0, D1). T8 then continues counting from FFh (see Figure 21 and Figure 22).

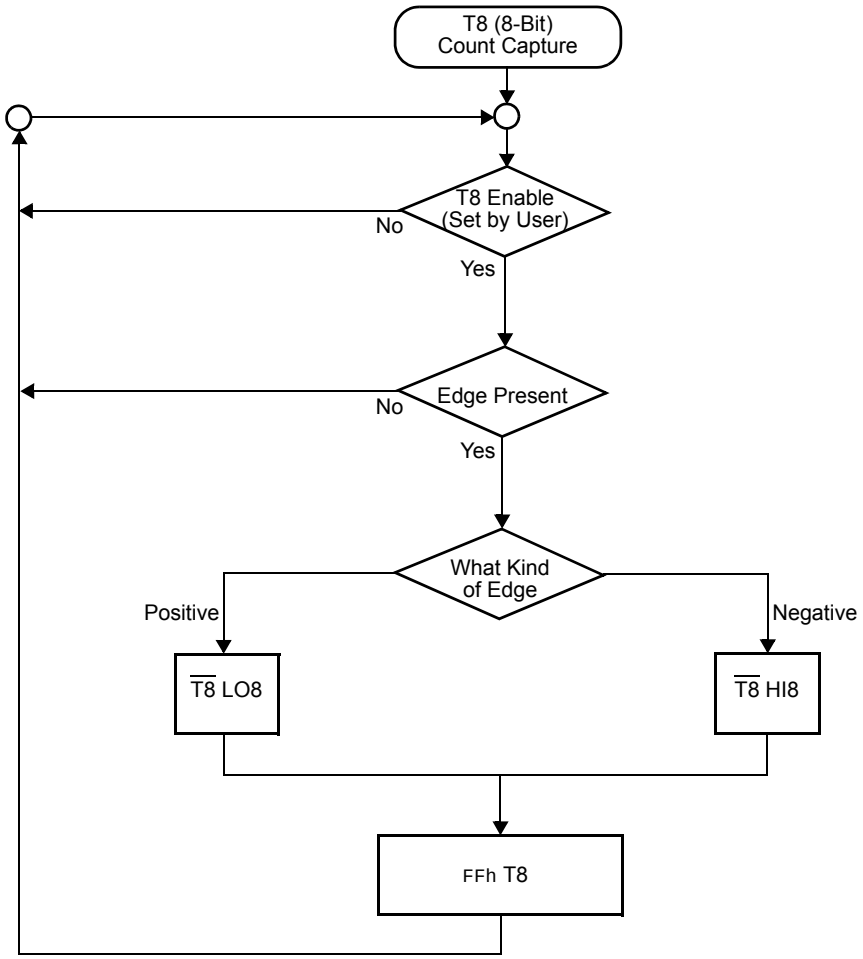

Figure 21. DEMODULATION Mode Count Capture Flowchart

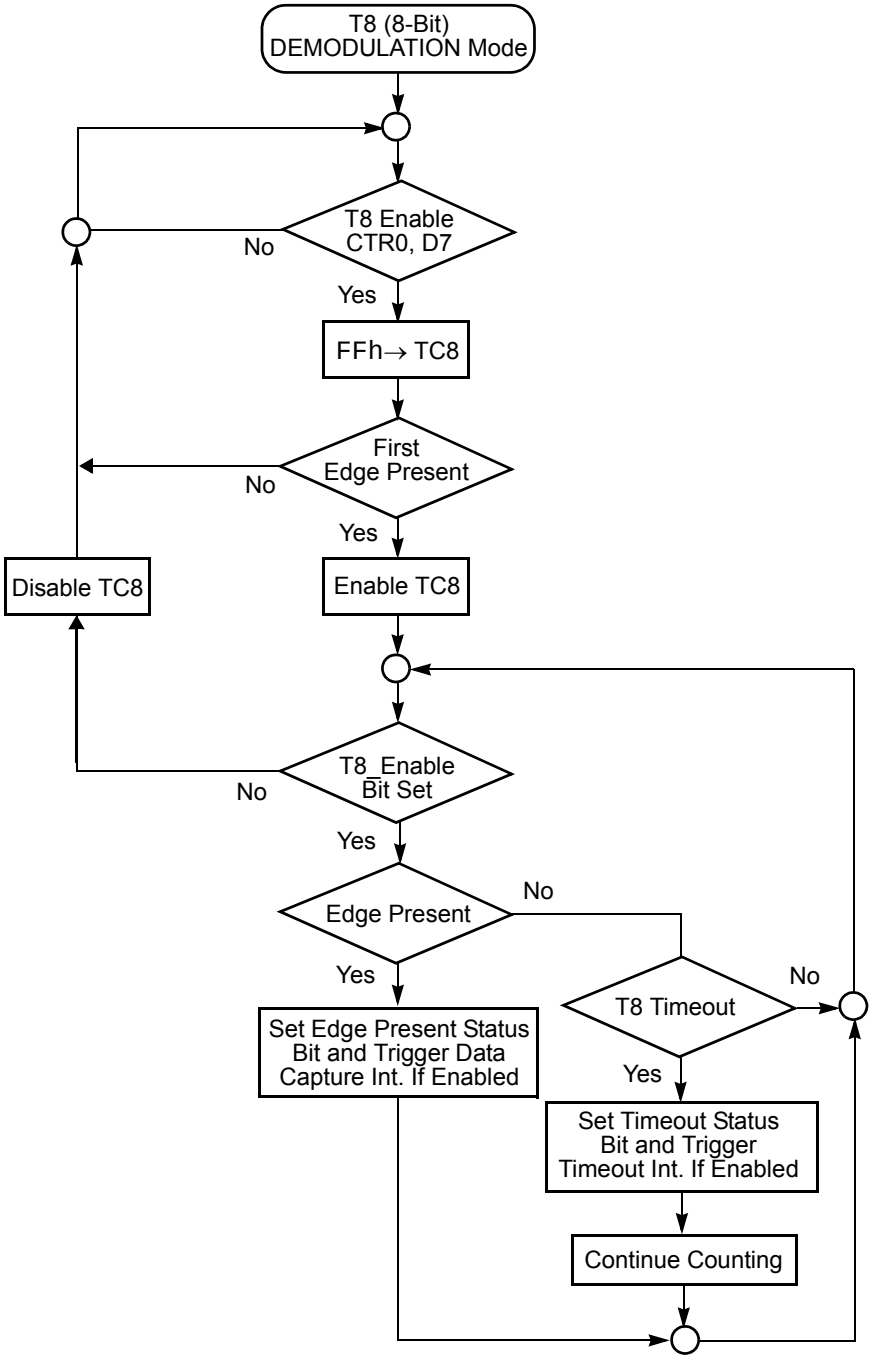

Figure 22. DEMODULATION Mode Flowchart

T16 TRANSMIT Mode

In NORMAL or PING-PONG mode, the output of T16 when not enabled, is dependent on CTR1, D0. If it is a 0, T16_OUT is a 1; if it is a 1, T16_OUT is 0. You can force the output of T16 to either a 0 or 1 whether it is enabled or not by programming CTR1 D3; D2 to a 10 or 11.

When T16 is enabled, TC16H * 256 + TC16L is loaded, and T16_OUT is switched to its initial value (CTR1, D0). When T16 counts down to 0, T16_OUT is toggled (in NORMAL or PING-PONG mode), an interrupt (CTR2, D1) is generated (if enabled), and a status bit (CTR2, D5) is set, see Figure 23.

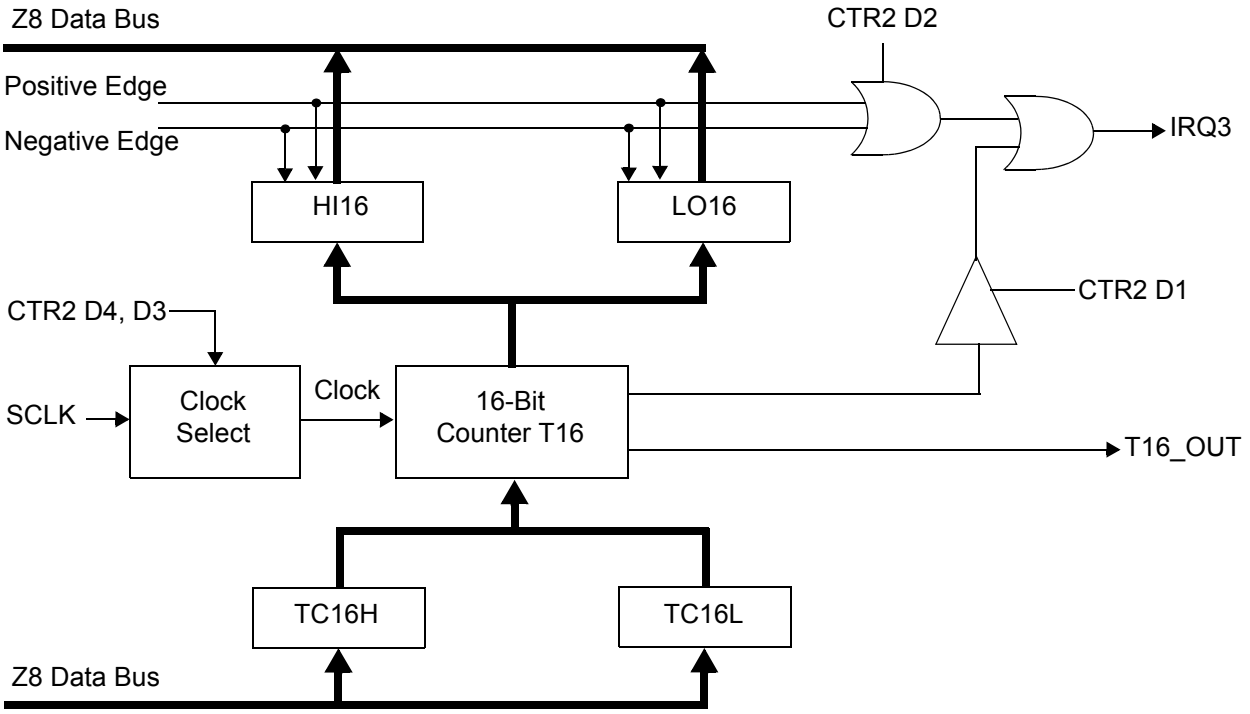

Figure 23. 16-Bit Counter/Timer Circuits

Note: *Global interrupts override this function as described in* Interrupts on page 43.

If T16 is in SINGLE-PASS mode, it is stopped at this point (see Figure 24). If it is in MODULO-N mode, it is loaded with TC16H * 256 + TC16L, and the counting continues (see Figure 25).

You can modify the values in TC16H and TC16L at any time. The new values take effect when they are loaded.

Caution: *Do not load these registers at the time the values are to be loaded into the counter/timer to ensure known operation. An initial count of 1 is not allowed. An initial count of 0 causes T16 to count from 0 to* FFFFh *to* FFFEh. *Transition from 0 to* FFFFh *is not a timeout condition.*

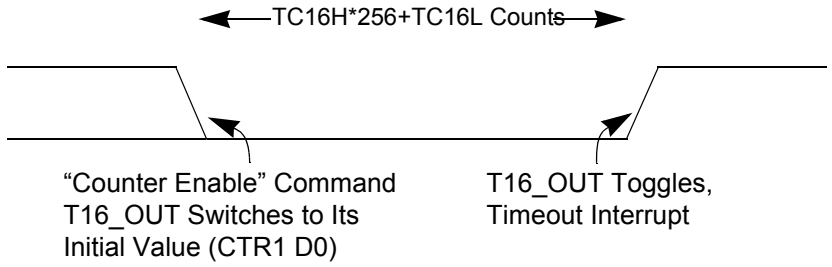

Figure 24. T16_OUT in SINGLE-PASS Mode

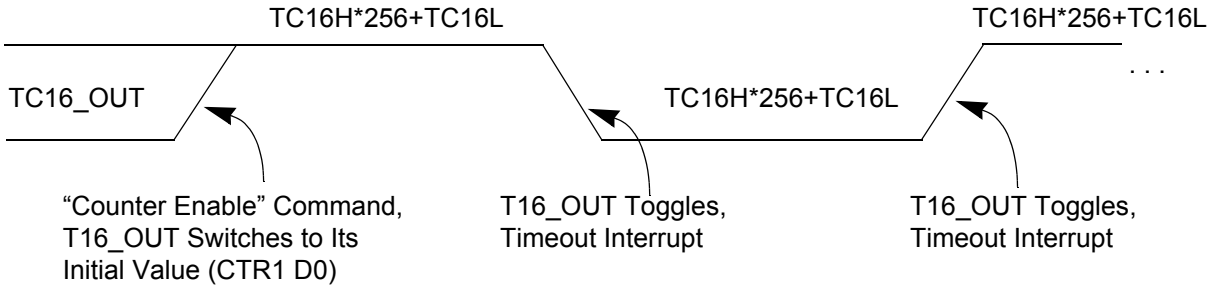

Figure 25. T16_OUT in MODULO-N Mode

T16 DEMODULATION Mode

You must program TC16L and TC16H to FFh. After T16 is enabled, and the first edge (rising, falling, or both depending on CTR1 D5; D4) is detected, T16 captures HI16 and LO16, reloads, and begins counting.

If D6 of CTR2 Is 0

When a subsequent edge (rising, falling, or both depending on CTR1, D5; D4) is detected during counting, the current count in T16 is complemented and put into HI16 and LO16. When data is captured, one of the edge detect status bits (CTR1, D1; D0) is set, and an interrupt is generated if enabled (CTR2, D2). T16 is loaded with FFFFh and starts again.

This T16 mode is generally used to measure space time, the length of time between bursts of carrier signal (marks).

If D6 of CTR2 Is 1

T16 ignores the subsequent edges in the input signal and continues counting down. A timeout of T8 causes T16 to capture its current value and generate an interrupt if enabled (CTR2, D2). In this case, T16 does not reload and continues counting. If the D6 bit of CTR2 is toggled (by writing a 0 then a 1 to it), T16 captures and reloads on the next edge (rising, falling, or both depending on CTR1, D5; D4), continuing to ignore subsequent edges.

This T16 mode generally measures mark time, the length of an active carrier signal burst.

If T16 reaches 0, T16 continues counting from FFFFh. Meanwhile, a status bit (CTR2 D5) is set, and an interrupt timeout can be generated if enabled (CTR2 D1).

PING-PONG Mode

This operation mode is only valid in TRANSMIT mode. T8 and T16 must be programmed in SINGLE-PASS mode (CTR0, D6; CTR2, D6), and PING-PONG mode must be programmed in CTR1, D3; D2. You can begin the operation by enabling either T8 or T16 (CTR0, D7 or CTR2, D7). For example, if T8 is enabled, T8_OUT is set to this initial value (CTR1, D1). According to T8_OUT's level, TC8H or TC8L is loaded into T8. After the terminal count is reached, T8 is disabled, and T16 is enabled. T16_OUT then switches to its initial value (CTR1, D0), data from TC16H and TC16L is loaded, and T16 starts to count. After T16 reaches the terminal count, it stops, T8 is enabled again, repeating the entire cycle. Interrupts can be allowed when T8 or T16 reaches terminal control (CTR0, D1; CTR2, D1). To stop the Ping-Pong operation, write 00 to bits D3 and D2 of CTR1, see Figure 26.

Note: *Enabling Ping-Pong operation while the counter/timers are running might cause intermittent counter/timer function. Disable the counter/timers and reset the status Flags before instituting this operation.*

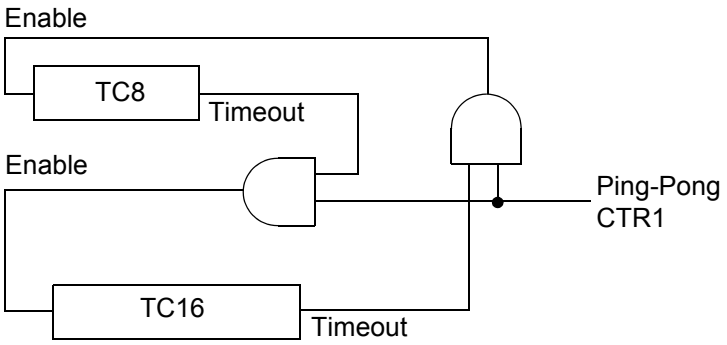

Figure 26. PING-PONG Mode Diagram

Initiating PING-PONG Mode

First, make sure both counter/timers are not running. Set T8 into SINGLE-PASS mode (CTR0, D6), set T16 into SINGLE-PASS mode (CTR2, D6), and set the PING-PONG mode (CTR1, D2; D3). These instructions can be in random order. Finally, start PING-PONG mode by enabling either T8 (CTR0, D7) or T16 (CTR2, D7), see Figure 26.

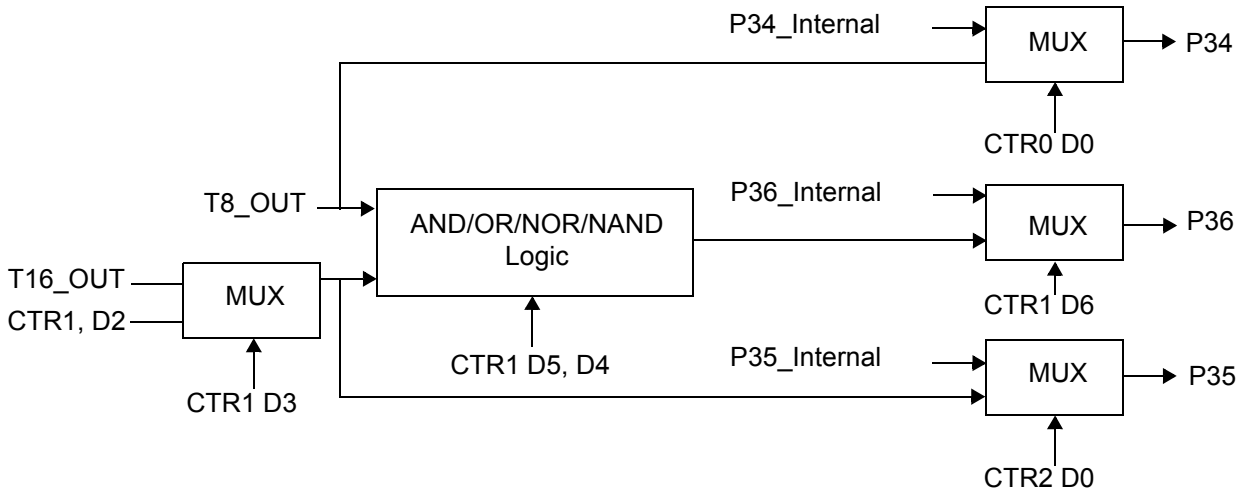

Figure 27. Output Circuit

The initial value of T8 or T16 must not be `1`. If you stop the timer and restart the timer, reload the initial value to avoid an unknown previous value.

During PING-PONG Mode

The enable bits of T8 and T16 (CTR0, D7; CTR2, D7) are set and cleared alternately by hardware. The timeout bits (CTR0, D5; CTR2, D5) are set every time the counter/timers reach the terminal count.

Timer Output

The output logic for the timers is displayed in Figure 27. P34 is used to output T8-OUT when D0 of CTR0 is set. P35 is used to output the value of TI6-OUT when D0 of CTR2 is set. When D6 of CTR1 is set, P36 outputs the logic combination of T8-OUT and T16-OUT determined by D5 and D4 of CTR1.

Interrupts

The Crimzon ZLP32300 features six different interrupts (see Table 11 on page 45). The interrupts are maskable and prioritized (see Figure 28). The six sources are divided as follows: three sources are claimed by Port 3 lines P33–P31, two by the

counter/timers (see Table 11 on page 45) and one for low-voltage detection. The Interrupt Mask Register (globally or individually) enables or disables the six interrupt requests.

The source for IRQ is determined by bit 1 of the Port 3 mode register (P3M). When in DIGITAL mode, Pin P33 is the source. When in ANALOG mode, the output of the Stop Mode Recovery source logic is used as the source for the interrupt, see Figure 33 on page 52.

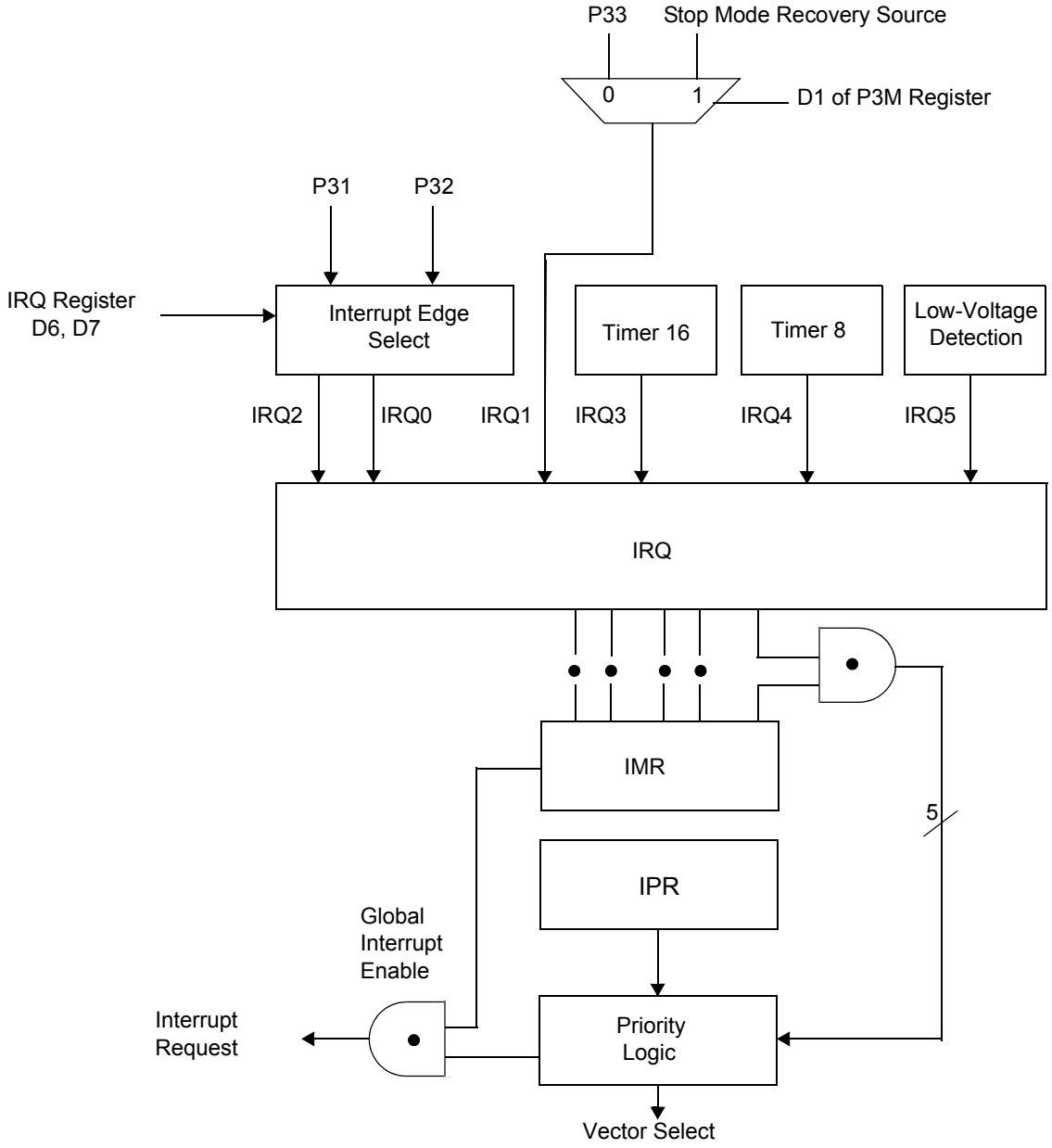

Figure 28. Interrupt Block Diagram

Table 11. Interrupt Types, Sources, and Vectors

Name	Source	Vector Location	Comments
IRQ0	P32	0,1	External (P32), Rising, Falling Edge Triggered
IRQ1	P33	2,3	External (P33), Falling Edge Triggered
IRQ2	P31, T_{IN}	4,5	External (P31), Rising, Falling Edge Triggered
IRQ3	T16	6,7	Internal
IRQ4	T8	8,9	Internal
IRQ5	LVD	10,11	Internal

When more than one interrupt is pending, priorities are resolved by a programmable priority encoder controlled by the Interrupt Priority Register. An interrupt machine cycle activates when an interrupt request is granted. As a result, all subsequent interrupts are disabled, and the Program Counter and Status Flags are saved. The cycle then branches to the program memory vector location reserved for that interrupt. All Crimzon ZLP32300 interrupts are vectored through locations in the program memory. This memory location and the next byte contain the 16-bit address of the interrupt service routine for that particular interrupt request. To accommodate polled interrupt systems, interrupt inputs are masked, and the Interrupt Request register is polled to determine which of the interrupt requests require service.

An interrupt resulting from AN1 is mapped into IRQ2, and an interrupt from AN2 is mapped into IRQ0. Interrupts IRQ2 and IRQ0 can be rising, falling, or both edge triggered. These interrupts are programmable. The software can poll to identify the state of the pin.

Programming bits for the Interrupt Edge Select are located in the IRQ Register (R250), bits D7 and D6. The configuration is indicated in Table 12.

Table 12. IRQ Register

IRQ		Interrupt Edge	
D7	**D6**	**IRQ2 (P31)**	**IRQ0 (P32)**
0	0	F	F
0	1	F	R
1	0	R	F
1	1	R/F	R/F

Note: F = Falling Edge; R = Rising Edge

Clock

The device's on-chip oscillator has a high-gain, parallel-resonant amplifier, for connection to a crystal, ceramic resonator, or any suitable external clock source (XTAL1 = Input, XTAL2 = Output). The crystal must be AT cut, 1 MHz to 8 MHz maximum, with a series resistance (RS) less than or equal to 100 Ω. The on-chip oscillator can be driven with a suitable external clock source.

The crystal must be connected across XTAL1 and XTAL2 using the recommended capacitors from each pin to ground. The typical capacitor value is 10 pF for 8 MHz. Also check with the crystal supplier for the optimum capacitance.

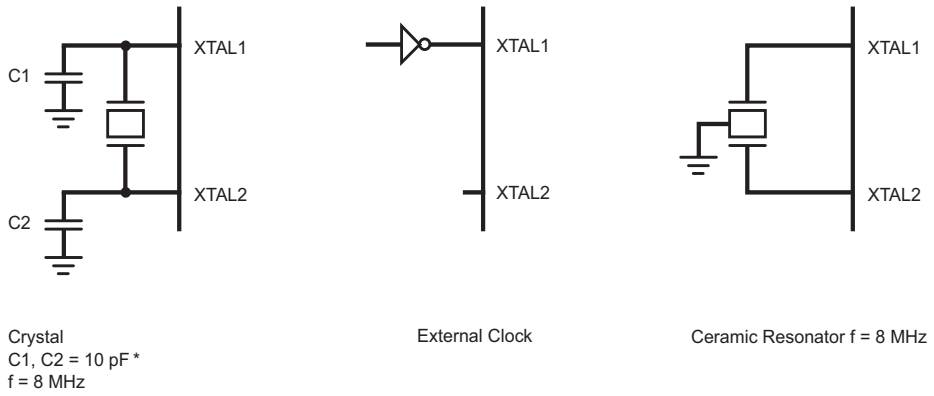

*Note: preliminary value.

Figure 29. Oscillator Configuration

Zilog's IR MCU supports crystal, resonator, and oscillator. Most resonators have a frequency tolerance of less than ±0.5%, which is enough for remote control application. Resonator has a very fast startup time, which is around few hundred microseconds. Most crystals have a frequency tolerance of less than 50 ppm (±0.005%). However, crystal needs longer startup time than the resonator. The large loading capacitance slows down the oscillation startup time. Zilog® suggests not to use more than 10 pF loading capacitor for the crystal. If the stray capacitance of the PCB or the crystal is high, the loading capacitance C1 and C2 must be reduced further to ensure stable oscillation before the T_{POR} (Power-On Reset time is typically 5-6 ms, see Table 20 on page 79).

For Stop Mode Recovery operation, bit 5 of SMR register allows you to select the Stop Mode Recovery delay, which is the T_{POR}. If Stop Mode Recovery delay is not selected, the MCU executes instruction immediately after it wakes up from the STOP mode. If resonator or crystal is used as a clock source then Stop Mode Recovery delay needs to be selected (bit 5 of SMR = 1).

For both resonator and crystal oscillator, the oscillation ground must go directly to the ground pin of the microcontroller. The oscillation ground must use the shortest distance from the microcontroller ground pin and it must be isolated from other connections.

Power Management

Power-On Reset

A timer circuit clocked by a dedicated on-board RC-oscillator is used for the Power-On Reset timer function. The POR time allows V_{DD} and the oscillator circuit to stabilize before instruction execution begins.

The POR timer circuit is a one-shot timer triggered by one of three conditions:

- Power Fail to Power OK status, including Waking up from V_{BO} Standby
- Stop Mode Recovery (if D5 of SMR = 1)
- WDT Timeout

The POR timer is 2.5 ms minimum. Bit 5 of the Stop Mode Register determines whether the POR timer is bypassed after Stop Mode Recovery (typical for external clock).

HALT Mode

This instruction turns off the internal CPU clock, but not the XTAL oscillation. The counter/timers and external interrupts IRQ0, IRQ1, IRQ2, IRQ3, IRQ4, and IRQ5 remain active. The devices are recovered by interrupts, either externally or internally generated. An interrupt request must be executed (enabled) to exit HALT Mode. After the interrupt service routine, the program continues from the instruction after HALT Mode.

STOP Mode

This instruction turns OFF the internal clock and external crystal oscillation, reducing the standby current to 10 µA or less. STOP mode is terminated only by a reset, such as WDT time-out, POR or SMR. This condition causes the processor to restart the application program at address `000Ch`. To enter STOP (or HALT) mode, first flush the instruction pipeline to avoid suspending execution in mid-instruction. Execute a NOP (Opcode = `FFh`) immediately before the appropriate sleep instruction, as follows:

```
FF          NOP         ; clear the pipeline
6F          STOP        ; enter Stop Mode
```

or

```
FF          NOP         ; clear the pipeline
7F          HALT        ; enter HALT Mode
```

Port Configuration

Port Configuration Register

The Port Configuration (PCON) register (see Figure 30) configures the comparator output on Port 3. It is located in the expanded register 2 at Bank F, location 00.

PCON(FH)00h

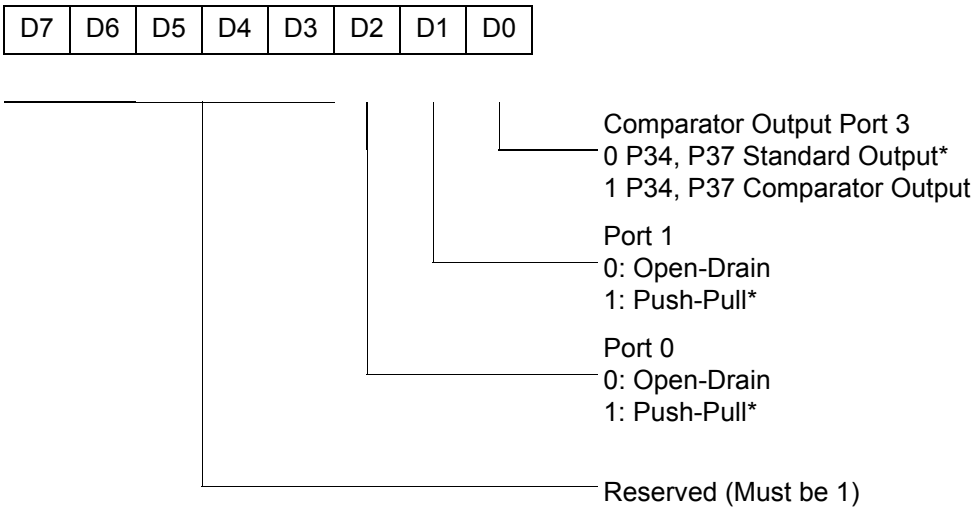

* Default setting after reset

Figure 30. Port Configuration Register (PCON) (Write Only)

Comparator Output Port 3 (D0)

Bit 0 controls the comparator used in Port 3. A 1 in this location brings the comparator outputs to P34 and P37, and a 0 releases the Port to its standard I/O configuration.

Port 1 Output Mode (D1)

Bit 1 controls the output mode of Port 1. A 1 in this location sets the output to push-pull, and a 0 sets the output to open-drain.

Port 0 Output Mode (D2)

Bit 2 controls the output mode of Port 0. A 1 in this location sets the output to push-pull, and a 0 sets the output to open-drain.

Stop Mode Recovery

Stop Mode Recovery Register (SMR)

This register selects the clock divide value and determines the mode of Stop Mode Recovery (see Figure 31). All bits are write only except bit 7, which is read only. Bit 7 is a Flag bit that is hardware set on the condition of Stop recovery and reset by a power-on cycle. Bit 6 controls whether a low level or a high level at the XOR-gate input (see Figure 33 on page 52) is required from the recovery source. Bit 5 controls the reset delay after recovery. Bits D2, D3, and D4 of the SMR register specify the source of the Stop Mode Recovery signal. Bits D0 determines if SCLK/TCLK are divided by 16 or not. The SMR is located in Bank F of the Expanded Register Group at address `0Bh`.

SMR(0F)0Bh

D7	D6	D5	D4	D3	D2	D1	D0

SCLK/TCLK Divide-by-16
0 OFF * *
1 ON

Reserved (Must be 0)

Stop Mode Recovery Source
000 POR Only *
001 Reserved
010 P31
011 P32
100 P33
101 P27
110 P2 NOR 0-3
111 P2 NOR 0-7

Stop Delay
0 OFF
1 ON * * * *

Stop Recovery Level * * *
0 Low *
1 High

Stop Flag
0 POR *
1 Stop Recovery * *

*Default after Power-On Reset or Watchdog Reset
* *Default setting after Reset and Stop Mode Recovery.
* * *At the XOR gate input
* * * *Default setting after reset. Must be 1 if using a crystal or resonator clock source.

Figure 31. Stop Mode Recovery Register

SCLK/TCLK Divide-by-16 Select (D0)

D0 of the SMR controls a divide-by-16 prescaler of SCLK/TCLK (see Figure 32). This control selectively reduces device power consumption during normal processor execution (SCLK control) and/or HALT mode (where TCLK sources interrupt logic). After Stop Mode Recovery, this bit is set to a 0.

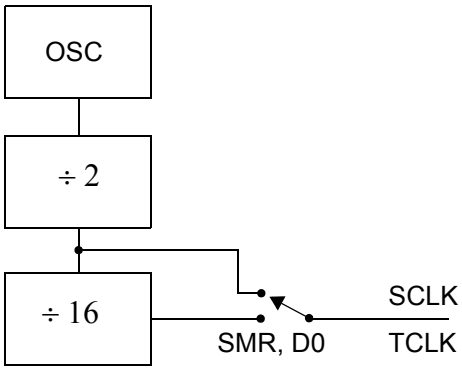

Figure 32. SCLK Circuit

Stop Mode Recovery Source (D2, D3, and D4)

These three bits of the SMR specify the wake-up source of the Stop recovery (see Figure 33 and Table 14).

Stop Mode Recovery Register 2—SMR2(F)0Dh

Table 13 lists and briefly describes the fields for this register.

Table 13. SMR2(F)0Dh:Stop Mode Recovery Register 2*

Field	Bit Position		Value	Description
Reserved	7- - - - - - -		0	Reserved (Must be 0)
Recovery Level	- 6 - - - - - -	W	0†	Low
			1	High
Reserved	- - 5 - - - - -		0	Reserved (Must be 0)

Table 13. SMR2(F)0Dh:Stop Mode Recovery Register 2* (Continued)

Field	Bit Position		Value	Description
Source	---432--	W	000†	A. POR Only
			001	B. NAND of P23–P20
			010	C. NAND of P27–P20
			011	D. NOR of P33–P31
			100	E. NAND of P33–P31
			101	F. NOR of P33–P31, P00, P07
			110	G. NAND of P33–P31, P00, P07
			111	H. NAND of P33–P31, P22–P20
Reserved	------10		00	Reserved (Must be 0)

*Port pins configured as outputs are ignored as an SMR recovery source.
†Indicates the value upon Power-On Reset.

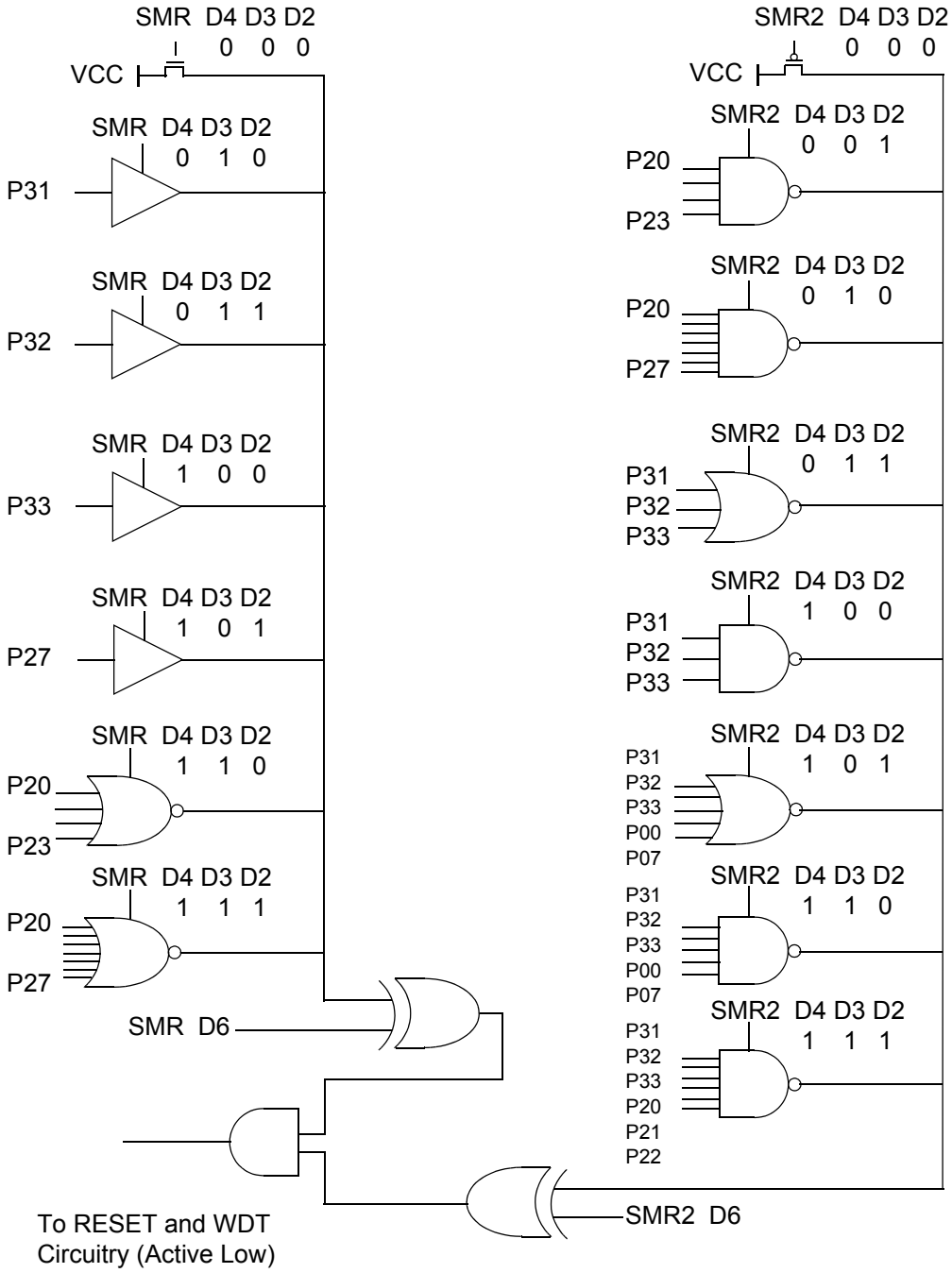

Figure 33. Stop Mode Recovery Source

Table 14. Stop Mode Recovery Source

SMR:432			Operation
D4	**D3**	**D2**	**Description of Action**
0	0	0	POR and/or external reset recovery
0	0	1	Reserved
0	1	0	P31 transition
0	1	1	P32 transition
1	0	0	P33 transition
1	0	1	P27 transition
1	1	0	Logical NOR of P20 through P23
1	1	1	Logical NOR of P20 through P27

Note: *Any Port 2 bit defined as an output drives the corresponding input to the default state. For example, if the NOR of P23-P20 is selected as the recovery source and P20 is configured as an output, the remaining SMR pins (P23-P21) form the NOR equation. This condition allows the remaining inputs to control the AND/OR function, refer to SMR2 register* on page 54 *for other recover sources.*

Stop Mode Recovery Delay Select (D5)

This bit, if low, disables the T_{POR} delay after Stop Mode Recovery. The default configuration of this bit is 1. If the 'fast' wake up is selected, the Stop Mode Recovery source must be kept active for at least 10 TpC.

Note: *This bit must be set to 1 if a crystal or resonator clock source is used. The T_{POR} delay allows the clock source to stabilize before executing instructions.*

Stop Mode Recovery Edge Select (D6)

A 1 in this bit position indicates that a High level on any one of the recovery sources wakes the Crimzon ZLP32300 from STOP mode. A 0 indicates Low level recovery. The default is 0 on POR.

Cold or Warm Start (D7)

This bit is read only. It is set to 1 when the device is recovered from STOP mode. The bit is set to 0 when the device reset is other than Stop Mode Recovery.

Stop Mode Recovery Register 2 (SMR2)

This register determines the mode of Stop Mode Recovery for SMR2 (see Figure 34).

SMR2(0F)Dh

D7	D6	D5	D4	D3	D2	D1	D0

Reserved (Must be 0)

Reserved (Must be 0)

Stop Mode Recovery Source 2
000 POR Only *
001 NAND P20, P21, P22, P23
010 NAND P20, P21, P22, P23, P24, P25, P26, P27
011 NOR P31, P32, P33
100 NAND P31, P32, P33
101 NOR P31, P32, P33, P00, P07
110 NAND P31, P32, P33, P00, P07
111 NAND P31, P32, P33, P20, P21, P22

Reserved (Must be 0)

Recovery Level * *
0 Low *
1 High

Reserved (Must be 0)

If used in conjunction with SMR, either of the two specified events causes a Stop Mode Recovery.
*Default setting after reset.
* *At the XOR gate input.

Figure 34. Stop Mode Recovery Register 2 ((0F)DH:D2–D4, D6 Write Only)

If SMR2 is used in conjunction with SMR, either of the specified events causes a Stop Mode Recovery.

Note: *Port pins configured as outputs are ignored as an SMR or SMR2 recovery source. For example, if the NAND or P23–P20 is selected as the recovery source and P20 is configured as an output, the remaining SMR pins (P23–P21) form the NAND equation.*

Watchdog Timer Mode

Watchdog Timer Mode Register (WDTMR)

The Watchdog Timer is a retriggerable one-shot timer that resets the Z8® if it reaches its terminal count. The WDT must initially be enabled by executing the WDT instruction. On subsequent executions of the WDT instruction, the WDT is refreshed. The WDT circuit is driven by an on-board RC-oscillator. The WDT instruction affects the Zero (Z), Sign (S), and Overflow (V) Flags.

The POR clock source the internal RC-oscillator. Bits 0 and 1 of the WDT register control a tap circuit that determines the minimum time-out period. Bit 2 determines whether the WDT is active during HALT, and Bit 3 determines WDT activity during Stop. Bits 4 through 7 are reserved (see Figure 35). This register is accessible only during the first 60 processor cycles (120 XTAL clocks) from the execution of the first instruction after Power-on reset, Watchdog Reset, or a Stop Mode Recovery (see Figure 34). After this point, the register cannot be modified by any means (intentional or otherwise). The WDTMR cannot be read. The register is located in Bank F of the Expanded Register Group at address location `0Fh`. It is organized as shown in Figure 35.

WDTMR(0F)0Fh

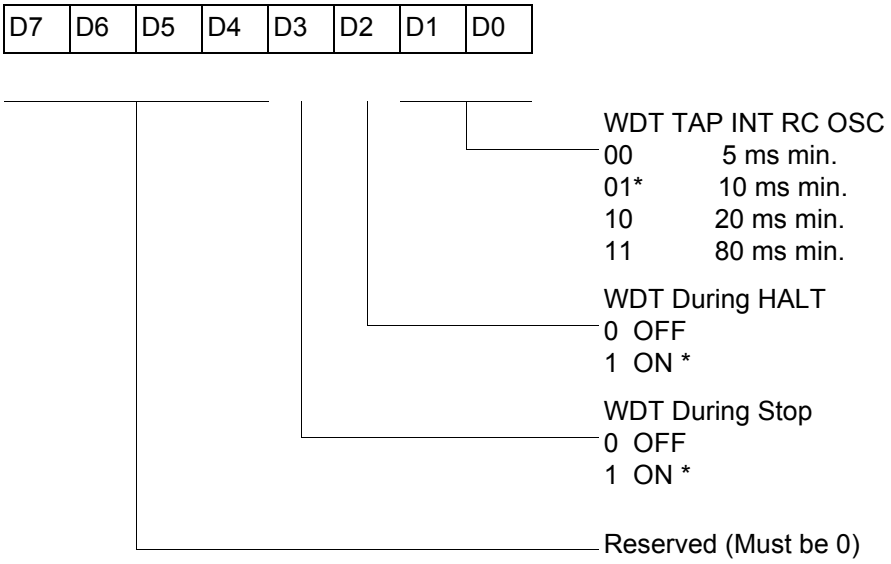

*Default setting after reset

Figure 35. Watchdog Timer Mode Register (Write Only)

WDT Time Select (D0, D1)

This bit selects the WDT time period. It is configured as indicated in Table 15.

Table 15. Watchdog Timer Time Select

D1	D0	Timeout of Internal RC-Oscillator
0	0	5 ms min
0	1	10 ms min
1	0	20 ms min
1	1	80 ms min

WDTMR During Halt (D2)

This bit determines whether or not the WDT is active during HALT mode. A 1 indicates active during HALT. The default is 1, see Figure 36.

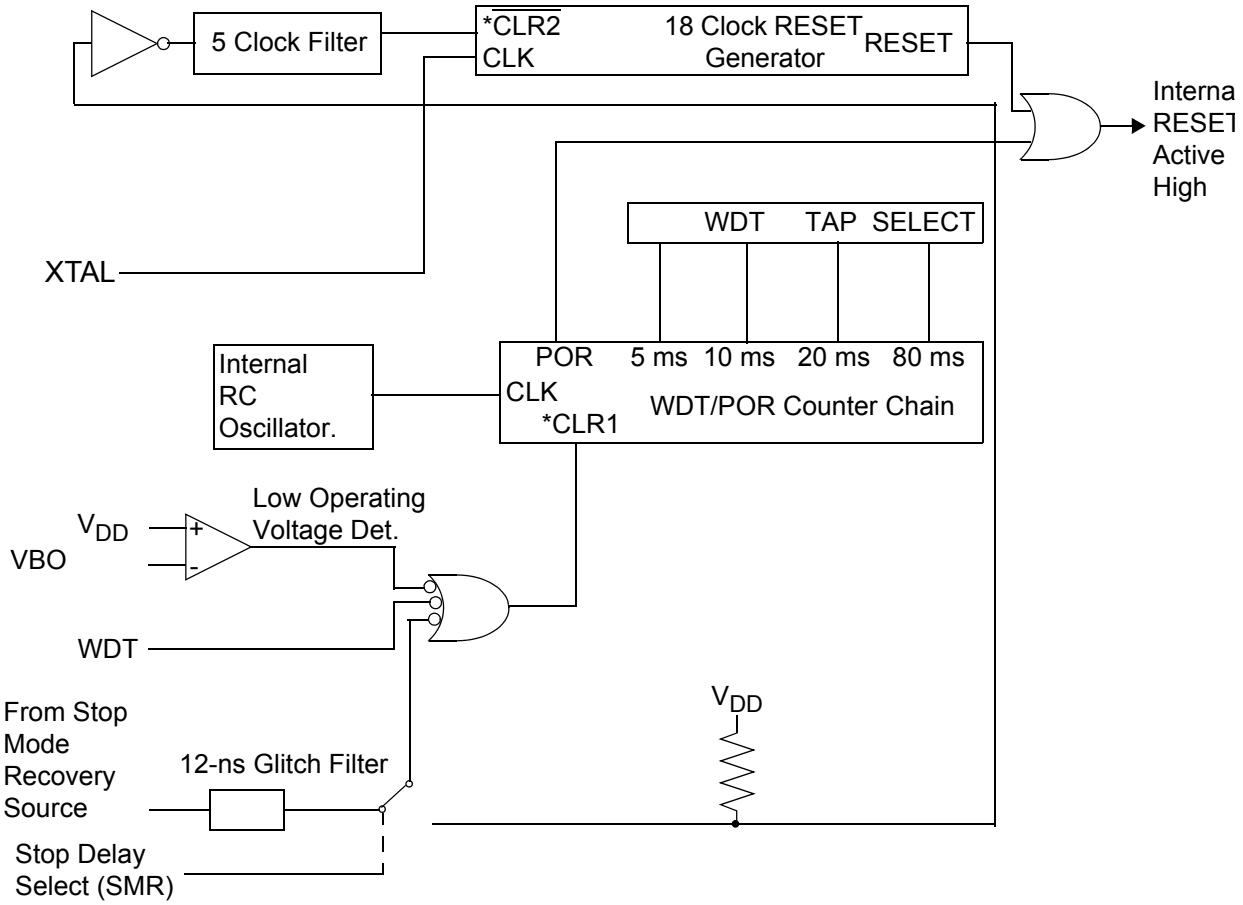

* CLR1 and $\overline{\text{CLR2}}$ enable the WDT/POR and 18 Clock Reset timers respectively upon a Low-to-High

Figure 36. Resets and WDT

WDTMR During STOP (D3)

This bit determines whether or not the WDT is active during STOP mode. A 1 indicates active during Stop. The default is 1.

EPROM Selectable Options

There are seven EPROM Selectable Options to choose from based on ROM code requirements. These are listed in Table 16.

Table 16. EPROM Selectable Options

Port 00–03 Pull-Ups	ON/OFF
Port 04–07 Pull-Ups	ON/OFF
Port 10–13 Pull-Ups	ON/OFF
Port 14–17 Pull-Ups	ON/OFF
Port 20–27 Pull-Ups	ON/OFF
EPROM Protection	ON/OFF
Watchdog Timer at Power-On Reset	ON/OFF

Voltage Brownout/Standby

An on-chip Voltage Comparator checks that the V_{DD} is at the required level for correct operation of the device. Reset is globally driven when V_{DD} falls below V_{BO}. A small drop in V_{DD} causes the XTAL1 and XTAL2 circuitry to stop the crystal or resonator clock. If the V_{DD} is allowed to stay above V_{RAM}, the RAM content is preserved. When the power level is returned to above V_{BO}, the device performs a POR and functions normally.

Low-Voltage Detection

Low-Voltage Detection Register—LVD(D)0Ch

Note: *Voltage detection does not work at STOP mode.*

Field	Bit Position			Description
LVD	76543---			Reserved No Effect
	-----2--	R	1 0*	HVD Flag set HVD Flag reset
	------1-	R	1 0*	LVD Flag set LVD Flag reset
	-------0	R/W	1 0*	Enable VD Disable VD
*Default after POR				

Note: *Do not modify register P01M while checking a low-voltage condition. Switching noise of both Ports 0 and 1 together might trigger the LVD Flag.*

Voltage Detection and Flags

The Voltage Detection register (LVD, register `0Ch` at the expanded register bank `0Dh`) offers an option of monitoring the V_{CC} voltage. The Voltage Detection is enabled when bit 0 of LVD register is set. Once Voltage Detection is enabled, the V_{CC} level is monitored in real time. The HVD Flag (bit 2 of the LVD register) is set only if V_{CC} is higher than $V_{HVD.}$ The LVD Flag (bit 1 of the LVD register) is set only if V_{CC} is lower than the V_{LVD}. When Voltage Detection is enabled, the LVD Flag also triggers IRQ5. The IRQ bit 5 latches the low-voltage condition until it is cleared by instructions or reset. The IRQ5 interrupt is served if it is enabled in the IMR register. Otherwise, bit 5 of IRQ register is latched as a Flag only.

Note: *If it is necessary to receive an LVD interrupt upon power-up at an operating voltage lower than the low battery detect threshold, enable interrupts using the Enable Interrupt (EI) instruction prior to enabling the voltage detection.*

Expanded Register File Control Registers (0D)

The expanded register file control registers (0D) are displayed in Figure 37 through Figure 41.

CTR0(0D)00H

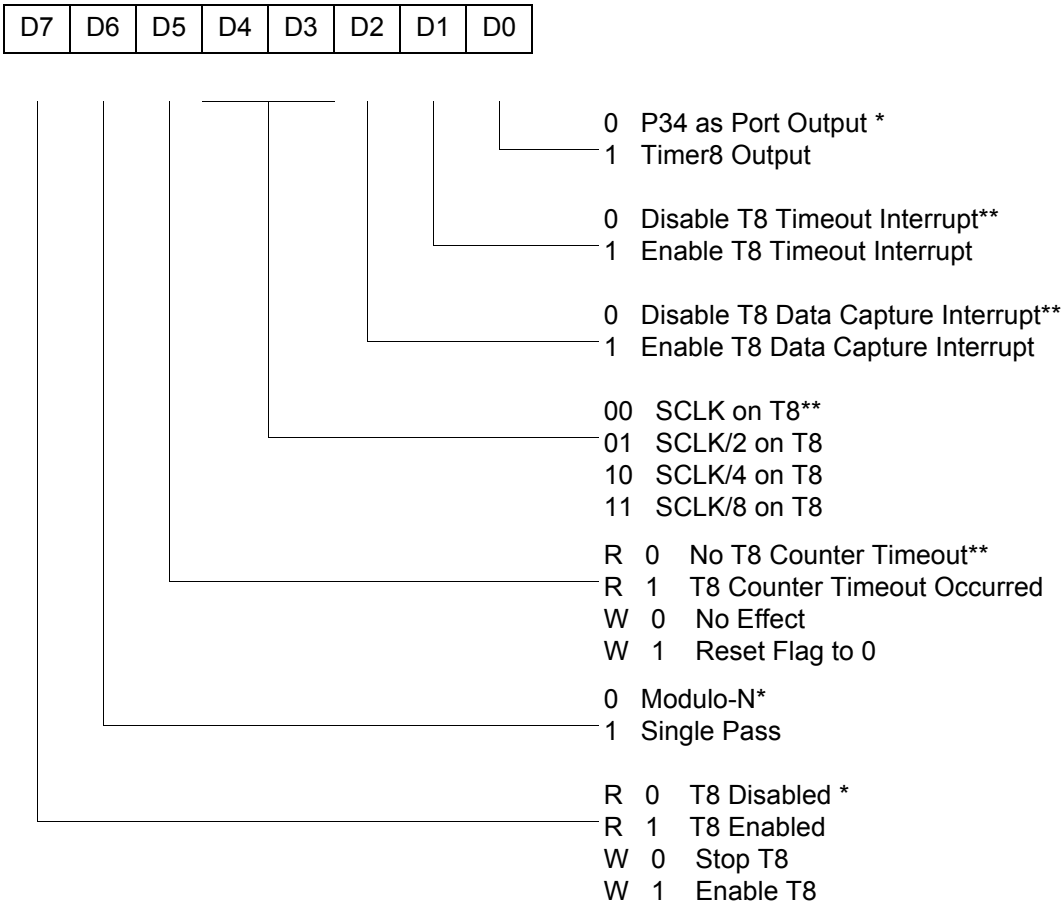

*Default setting after reset.
**Default setting after reset. Not reset with a Stop Mode Recovery.

Figure 37. TC8 Control Register ((0D)O0H: Read/Write Except Where Noted)

CTR1(0D)01H

D7	D6	D5	D4	D3	D2	D1	D0

TRANSMIT Mode*
R/W 0 T16_OUT is 0 initially*
1 T16_OUT is 1 initially
DEMODULATION Mode
R 0 No Falling Edge Detection
R 1 Falling Edge Detection
W 0 No Effect
W 1 Reset Flag to 0

TRANSMIT Mode*
R/W 0 T8_OUT is 0 initially*
1 T8_OUT is 1 initially
DEMODULATION Mode
R 0 No Rising Edge Detection
R 1 Rising Edge Detection
W 0 No Effect
W 1 Reset Flag to 0

TRANSMIT Mode*
0 0 Normal Operation*
0 1 PING-PONG Mode
1 0 T16_OUT = 0
1 1 T16_OUT = 1
DEMODULATION Mode
0 0 No Filter
0 1 4 SCLK Cycle Filter
1 0 8 SCLK Cycle Filter
1 1 Reserved

TRANSMIT Mode/T8/T16 Logic
0 0 AND**
0 1 OR
1 0 NOR
1 1 NAND
DEMODULATION Mode
0 0 Falling Edge Detection
0 1 Rising Edge Detection
1 0 Both Edge Detection
1 1 Reserved

TRANSMIT Mode
0 P36 as Port Output *
1 P36 as T8/T16_OUT
DEMODULATION Mode
0 P31 as Demodulator Input
1 P20 as Demodulator Input

TRANSMIT/DEMODULATION Mode
0 TRANSMIT Mode *
1 DEMODULATION Mode

*Default setting after reset
**Default setting after Reset. Not reset with a Stop Mode Recovery.

Figure 38. T8 and T16 Common Control Functions ((0D)01H: Read/Write)

Notes:

1. *Ensure to differentiate the TRANSMIT mode from DEMODULATION mode. Depending on which of these two modes is operating, the CTR1 bit has different functions.*
2. *Changing from one mode to another cannot be performed without disabling the counter/timers.*

CTR2(0D)02H

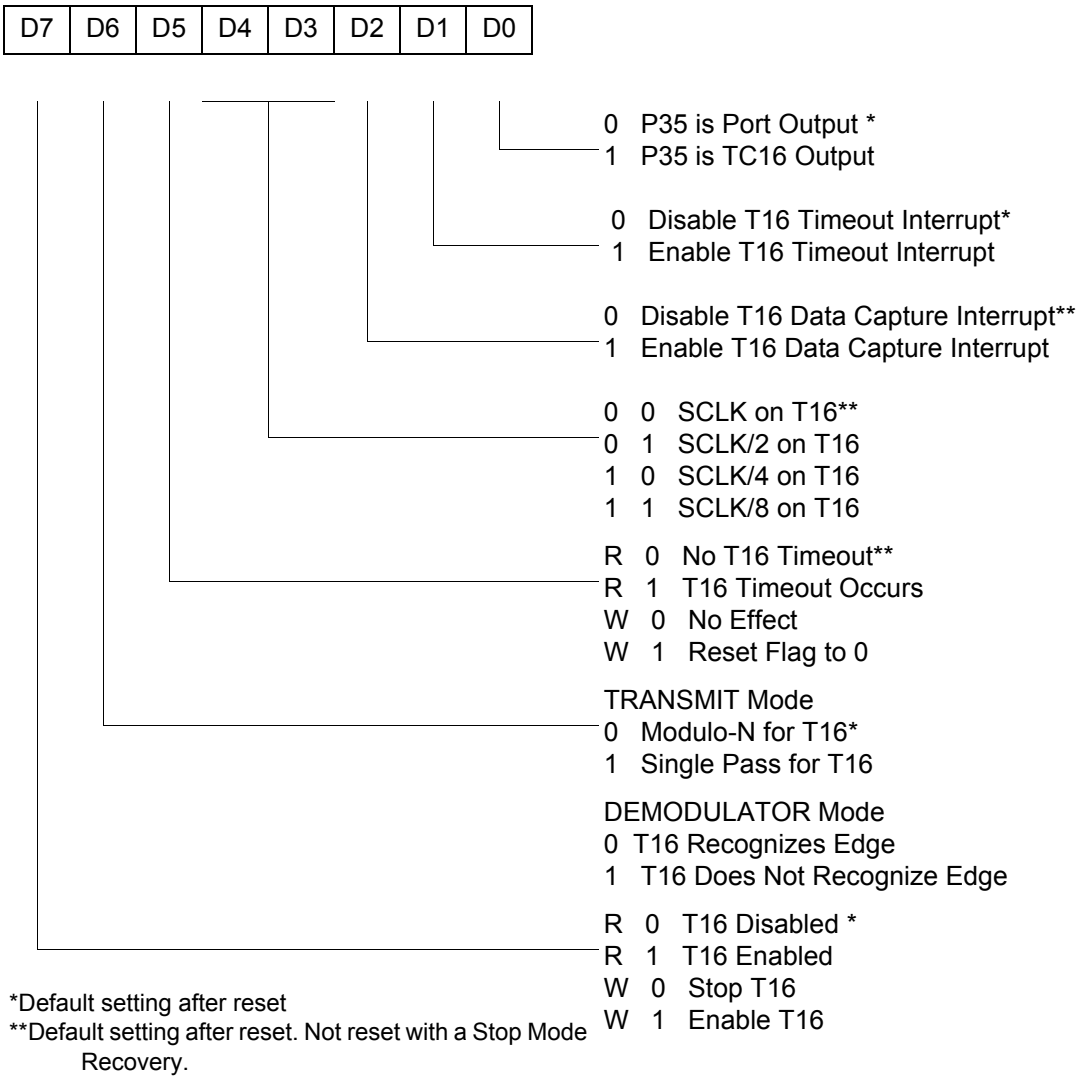

Figure 39. T16 Control Register ((0D) 2H: Read/Write Except Where Noted)

CTR3(0D)03H

D7	D6	D5	D4	D3	D2	D1	D0

Reserved
No effect when written
Always reads 11111

Sync Mode
0* Disable Sync Mode**
1 Enable Sync Mode

T_8 Enable
R 0* T_8 Disabled
R 1 T_8 Enabled
W0 Stop T_8
W1 Enable T_8

T_{16} Enable
R 0* T_{16} Disabled
R 1 T_{16} Enabled
W 0 Stop T_{16}
W 1 Enable T_{16}

*Default setting after reset.
**Default setting after reset. Not reset with a Stop Mode Recovery.

Figure 40. T8/T16 Control Register (0D)03H: Read/Write (Except Where Noted)

Note: *If Sync Mode is enabled, the first pulse of T8 carrier is always synchronized with T16 (demodulated signal). It can always provide a full carrier pulse.*

LVD(0D)0CH

D7	D6	D5	D4	D3	D2	D1	D0

Voltage Detection
0: Disable *
1: Enable

LVD Flag (Read only)
0: LVD Flag reset *
1: LVD Flag set

HVD Flag (Read only)
0: HVD Flag reset *
1: HVD Flag set

Reserved (Must be 0)

*Default setting after reset.

Figure 41. Voltage Detection Register

Note: *Do not modify register P01M while checking a low-voltage condition. Switching noise of both Ports 0 and 1 together might trigger the LVD Flag.*

Expanded Register File Control Registers (0F)

The expanded register file control registers (0F) are displayed in Figure 42 through Figure 55 on page 74.

PCON(0F)00H

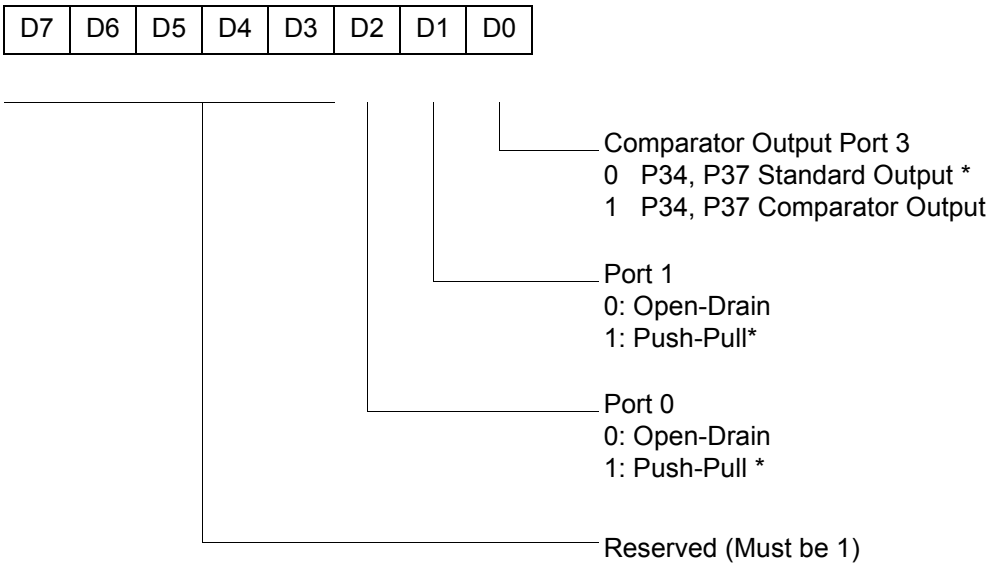

*Default setting after reset

Figure 42. Port Configuration Register (PCON)(0F)00H: Write Only)

SMR(0F)0BH

D7	D6	D5	D4	D3	D2	D1	D0

SCLK/TCLK Divide-by-16
0 OFF *
1 ON

Reserved (Must be 0)

Stop Mode Recovery Source
000 POR Only *
001 Reserved
010 P31
011 P32
100 P33
101 P27
110 P2 NOR 0–3
111 P2 NOR 0–7

Stop Delay
0 OFF
1 ON * * * *

Stop Recovery Level * * *
0 Low *
1 High

Stop Flag
0 POR * * * * *
1 Stop Recovery * *

*Default setting after Reset
* *Set after Stop Mode Recovery
* * *At the XOR gate input
* * * *Default setting after Reset. Must be 1 if using a crystal or resonator clock source.
* * * * *Default setting after Power-On Reset. Not Reset with a Stop Mode Recovery.

Figure 43. Stop Mode Recovery Register ((0F)0BH: D6–D0=Write Only, D7=Read Only)

SMR2(0F)0DH

D7	D6	D5	D4	D3	D2	D1	D0

Reserved (Must be 0)

Reserved (Must be 0)

Stop Mode Recovery Source 2
000 POR Only *
001 NAND P20, P21, P22, P23
010 NAND P20, P21, P22, P23, P24, P25, P26, P27
011 NOR P31, P32, P33
100 NAND P31, P32, P33
101 NOR P31, P32, P33, P00, P07
110 NAND P31, P32, P33, P00, P07
111 NAND P31, P32, P33, P20, P21, P22

Reserved (Must be 0)

Recovery Level * *
0 Low
1 High

Reserved (Must be 0)

If used in conjunction with SMR, either of the two specified events causes a Stop Mode Recovery.
*Default setting after reset. Not Reset with a Stop Mode Recovery.
* *At the XOR gate input

Figure 44. Stop Mode Recovery Register 2 ((0F)0DH:D2–D4, D6 Write Only)

WDTMR(0F)0FH

D7	D6	D5	D4	D3	D2	D1	D0

WDT TAP INT RC OSC
00 5 ms min.
01* 10 ms min.
10 20 ms min.
11 80 ms min.

WDT During HALT
0 OFF
1 ON *

WDT During Stop
0 OFF
1 ON *

Reserved (Must be 0)

*Default setting after reset. Not Reset with a Stop Mode Recovery.

Figure 45. Watchdog Timer Register ((0F) 0FH: Write Only)

Standard Control Registers

The standard control registers are displayed in Figure 46 through Figure 55 on page 74.

R246 P2M(F6H)

D7	D6	D5	D4	D3	D2	D1	D0

P27–P20 I/O Definition
0 Defines bit as OUTPUT
1 Defines bit as INPUT *

*Default setting after reset. Not Reset with a Stop Mode Recovery.

Figure 46. Port 2 Mode Register (F6H: Write Only)

R247 P3M(F7H)

D7	D6	D5	D4	D3	D2	D1	D0

0: Port 2 Open Drain *
1: Port 2 Push-Pull

0= P31, P32 DIGITAL Mode*
1= P31, P32 ANALOG Mode

Reserved (Must be 0)

*Default setting after reset. Not Reset with a Stop Mode Recovery.

Figure 47. Port 3 Mode Register (F7H: Write Only)

R248 P01M(F8H)

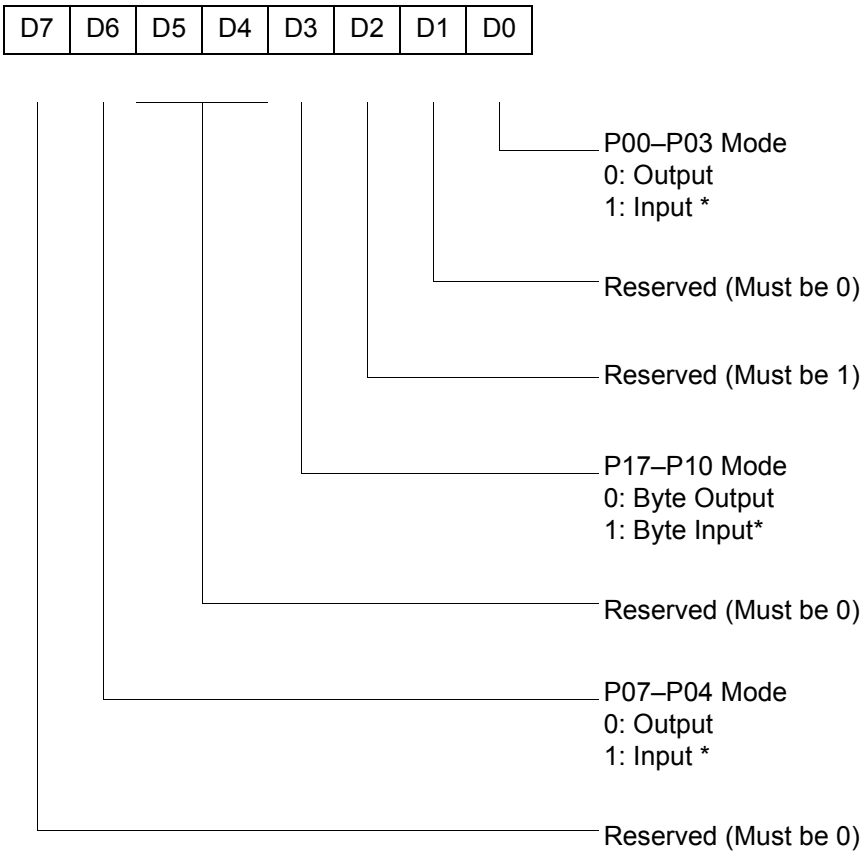

*Default setting after reset; only P00, P01 and P07 are available on Crimzon ZLP32300 20-pin configurations.

Figure 48. Port 0 and 1 Mode Register (F8H: Write Only)

R249 IPR(F9H)

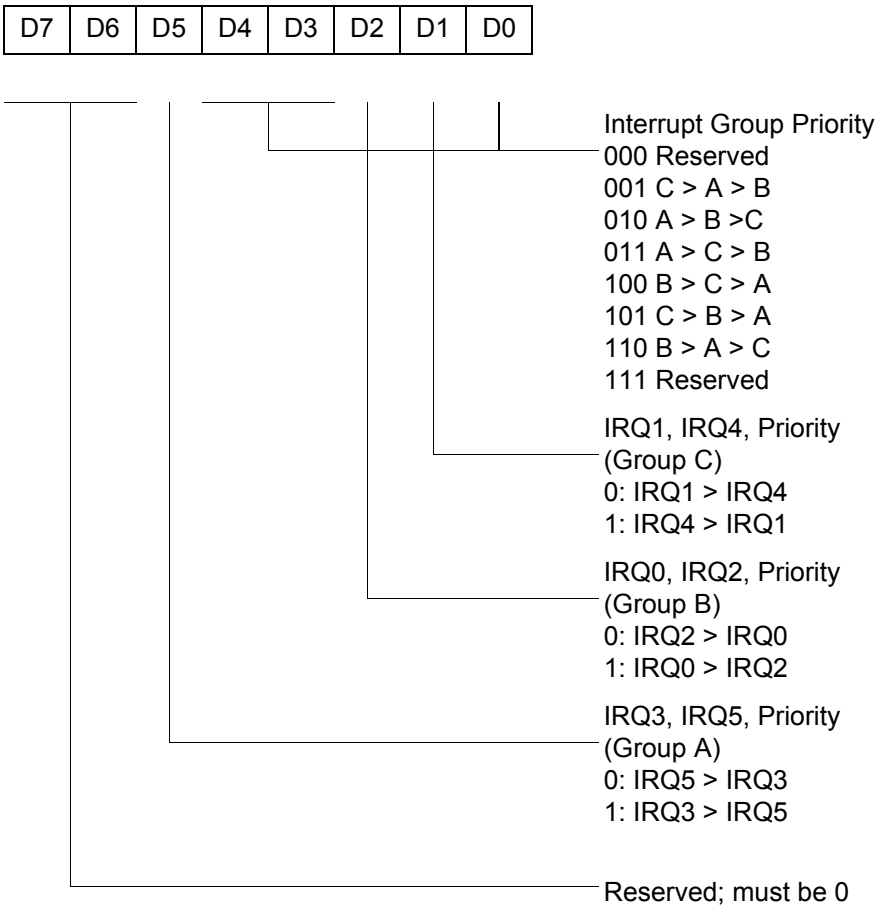

Figure 49. Interrupt Priority Register (F9H: Write Only)

R250 IRQ(FAH)

D7	D6	D5	D4	D3	D2	D1	D0

IRQ0 = P32 Input
IRQ1 = P33 Input
IRQ2 = P31 Input
IRQ3 = T16
IRQ4 = T8
IRQ5 = LVD

Inter Edge
P31↓ P32↓ = 00
P31↓ P32↑ = 01
P31↑ P32↓ = 10
P31↑↓ P32↑↓ = 11

Figure 50. Interrupt Request Register (FAH: Read/Write)

R251 IMR(FBH)

D7	D6	D5	D4	D3	D2	D1	D0

1 Enables IRQ5–IRQ0
(D0 = IRQ0)

Reserved (Must be 0)

0 Master Interrupt Disable *
1 Master Interrupt Enable * *

*Default setting after reset
* *Only by using EI, DI instruction; DI is required before changing the IMR register

Figure 51. Interrupt Mask Register (FBH: Read/Write)

R252 Flags(FCH)

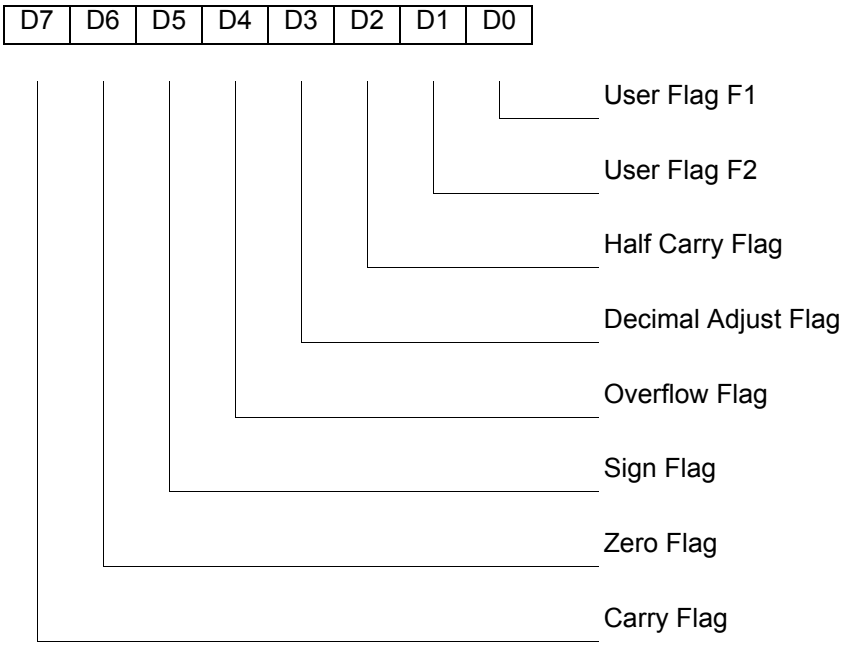

Figure 52. Flag Register (FCH: Read/Write)

R253 RP(FDH)

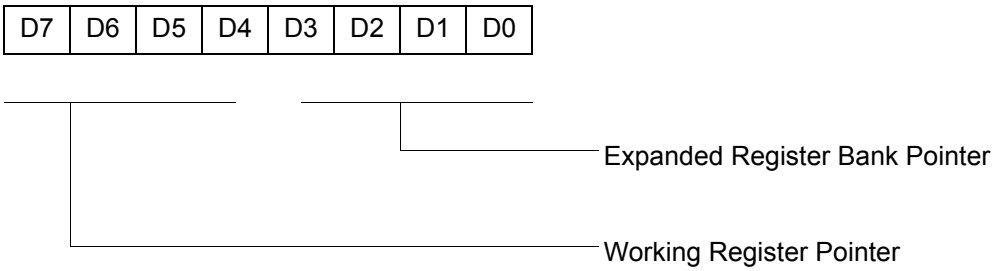

Default setting after reset = 0000 0000

Figure 53. Register Pointer (FDH: Read/Write)

R254 SPH(FEH)

D7	D6	D5	D4	D3	D2	D1	D0

General-Purpose Register

Figure 54. Stack Pointer High (FEH: Read/Write)

R255 SPL(FFH)

D7	D6	D5	D4	D3	D2	D1	D0

Stack Pointer Low Byte (SP7–SP0)

Figure 55. Stack Pointer Low (FFH: Read/Write)

Electrical Characteristics

Absolute Maximum Ratings

Stresses greater than those listed in Table 18 might cause permanent damage to the device. This rating is a stress rating only. Functional operation of the device at any condition above those indicated in the operational sections of these specifications is not implied. Exposure to absolute maximum rating conditions for an extended period might affect device reliability.

Table 17. Absolute Maximum Ratings

Parameter	Minimum	Maximum	Units	Notes
Ambient temperature under bias	0	+70	C	
Storage temperature	–65	+150	C	
Voltage on any pin with respect to V_{SS}	–0.3	+5.5	V	1
Voltage on V_{DD} pin with respect to V_{SS}	–0.3	+3.6	V	
Maximum current on input and/or inactive output pin	–5	+5	µA	
Maximum output current from active output pin	–25	+25	mA	
Maximum current into V_{DD} or out of V_{SS}		75	mA	

[1]This voltage applies to all pins except the following: V_{DD}, P32, P33 and $\overline{\text{RESET}}$.

Standard Test Conditions

The characteristics listed in this product specification apply for standard test conditions as noted. All voltages are referenced to GND. Positive current flows into the referenced pin (see Figure 56).

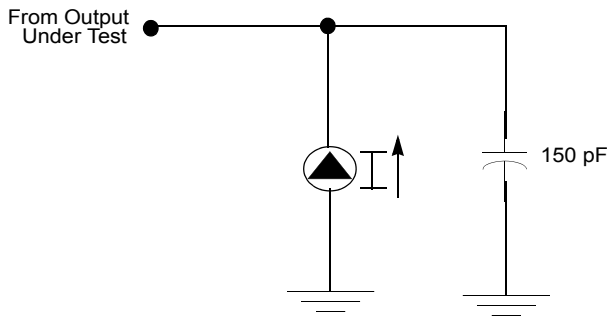

Figure 56. Test Load Diagram

Capacitance

Table 18 lists the capacitances.

Table 18. Capacitance

Parameter	Maximum
Input capacitance	12 pF
Output capacitance	12 pF
I/O capacitance	12 pF
T_A = 25 °C, V_{CC} = GND = 0 V, f = 1.0 MHz, unmeasured pins returned to GND	

DC Characteristics

Table 19 describes the DC characteristics.

Table 19. DC Characteristics

			T_A= 0 °C to +70 °C					
Symbol	**Parameter**	**V_{CC}**	**Min**	**Typ[7]**	**Max**	**Units**	**Conditions**	**Notes**
V_{CC}	Supply Voltage		2.0		3.6	V	See Notes	5
V_{CH}	Clock Input High Voltage	2.0-3.6	0.8 V_{CC}		V_{CC}+0.3	V	Driven by External Clock Generator	
V_{CL}	Clock Input Low Voltage	2.0-3.6	V_{SS}–0.3		0.4	V	Driven by External Clock Generator	
V_{IH}	Input High Voltage	2.0-3.6	0.7 V_{CC}		V_{CC}+0.3	V		
V_{IL}	Input Low Voltage	2.0-3.6	V_{SS}–0.3		0.2 V_{CC}	V		
V_{OH1}	Output High Voltage	2.0-3.6	V_{CC}–0.4			V	I_{OH} = –0.5 mA	
V_{OH2}	Output High Voltage (P36, P37, P00, P01)	2.0-3.6	V_{CC}–0.8			V	I_{OH} = –7 mA	
V_{OL1}	Output Low Voltage	2.0-3.6			0.4	V	I_{OL} = 4.0 mA	
V_{OL2}	Output Low Voltage (P00, P01, P36, P37)	2.0-3.6			0.8	V	I_{OL} = 10 mA	
V_{OFFSET}	Comparator Input Offset Voltage	2.0-3.6			25	mV		
V_{REF}	Comparator Reference Voltage	2.0-3.6	0		V_{CC} -1.75	V		

Table 19. DC Characteristics (Continued)

			T_A= 0 °C to +70 °C					
Symbol	**Parameter**	**V_{CC}**	**Min**	**Typ(7)**	**Max**	**Units**	**Conditions**	**Notes**
I_{IL}	Input Leakage	2.0-3.6	–1		1	µA	V_{IN} = 0 V, V_{CC} Pull-ups disabled	
R_{PU}	Pull-Up Resistance	2.0 3.6	225 75		675 275	kΩ kΩ	V_{IN} = 0 V, Pull-ups selected by mask option	
I_{OL}	Output Leakage	2.0-3.6	–1		1	µA	V_{IN} = 0 V, V_{CC}	
I_{CC}	Supply Current	2.0 3.6		1 5	3 10	mA mA	at 8.0 MHz at 8.0 MHz	1, 2 1, 2
I_{CC1}	Standby Current (HALT Mode)	2.0 3.6		0.5 0.8	1.6 2.0	mA	V_{IN} = 0V, V_{CC} at 8.0 MHz Same as above	1, 2, 6 1, 2, 6
I_{CC2}	Standby Current (STOP Mode)	2.0 3.6 2.0 3.6		1.6 1.8 5 8	8 10 20 30	µA µA µA µA	V_{IN} = 0 V, V_{CC} WDT is not Running Same as above V_{IN} = 0 V, V_{CC} WDT is Running Same as above	3 3 3 3
I_{LV}	Standby Current (Low Voltage)			1.2	6	µA	Measured at 1.3 V	4
V_{BO}	V_{CC} Low Voltage Protection			1.9	2.0	V	8 MHz maximum Ext. CLK Freq.	
V_{LVD}	Vcc Low Voltage Detection			2.4		V		
V_{HVD}	Vcc High Voltage Detection			2.7		V		

Notes

1. All outputs unloaded, inputs at rail.
2. CL1 = CL2 = 100 pF.
3. Oscillator stopped.
4. Oscillator stops when V_{CC} falls below V_{BO} limit.
5. It is strongly recommended to add a filter capacitor (minimum 0.1 µF), physically close to VDD and V_{SS} pins if operating voltage fluctuations are anticipated, such as those resulting from driving an infrared LED.
6. Comparator and Timers are on. Interrupt disabled.
7. Typical values shown are at 25 ºC.

AC Characteristics

Figure 57 and Table 20 describe the Alternating Current (AC) characteristics.

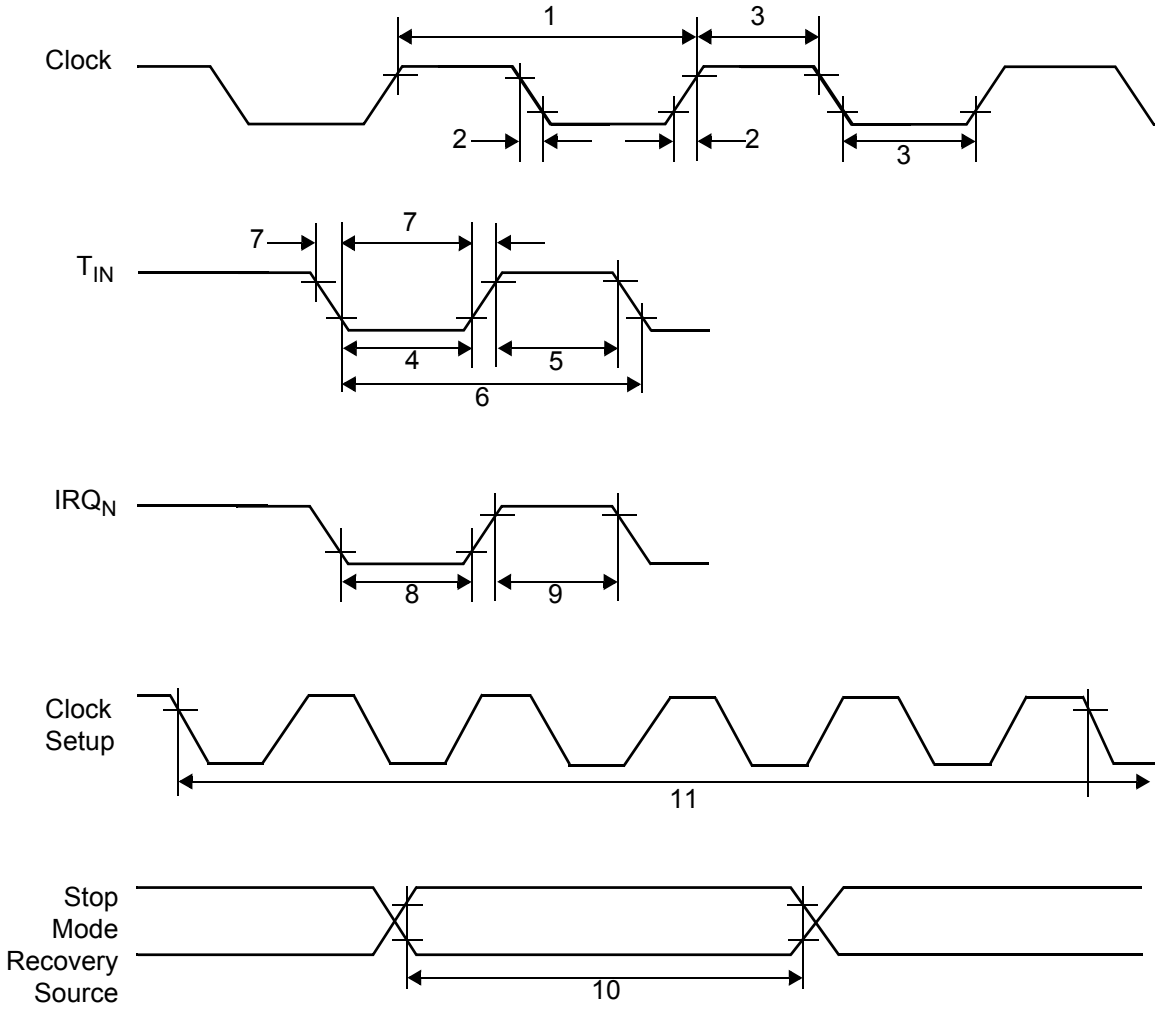

Figure 57. AC Timing Diagram

Table 20. AC Characteristics

			T_A=0 °C to +70 °C 8.0 MHz					Watchdog Timer Mode Register (D1, D0)
No	**Symbol**	**Parameter**	**V_{CC}**	**Minimum**	**Maximum**	**Units**	**Notes**	
1	TpC	Input Clock Period	2.0–3.6	121	DC	ns	1	
2	TrC,TfC	Clock Input Rise and Fall Times	2.0–3.6		25	ns	1	
3	TwC	Input Clock Width	2.0–3.6	37		ns	1	
4	TwTinL	Timer Input Low Width	2.0 3.6	100 70		ns	1	
5	TwTinH	Timer Input High Width	2.0–3.6	3TpC			1	
6	TpTin	Timer Input Period	2.0–3.6	8TpC			1	
7	TrTin,TfTin	Timer Input Rise and Fall Timers	2.0–3.6		100	ns	1	
8	TwIL	Interrupt Request Low Time	2.0 3.6	100 70		ns	1, 2	
9	TwIH	Interrupt Request Input High Time	2.0–3.6	5TpC			1, 2	
10	Twsm	Stop Mode Recovery Width Spec	2.0–3.6	12 10TpC		ns	3 4	
11	Tost	Oscillator Start-Up Time	2.0–3.6		5TpC		4	
12	Twdt	Watchdog Timer Delay Time	2.0–3.6 2.0–3.6 2.0–3.6 2.0–3.6	5 10 20 80		ms ms ms ms		0, 0 0, 1 1, 0 1, 1
13	T_{POR}	Power-on reset	2.0–3.6	2.5	10	ms		

Notes
1. Timing Reference uses 0.9 V_{CC} for a logic 1 and 0.1 V_{CC} for a logic 0.
2. Interrupt request through Port 3 (P33–P31).
3. SMR–D5 = 1.
4. SMR–D5 = 0.

Packaging

Package information for all versions of Crimzon ZLP32300 is displayed in Figure 58 through Figure 65.

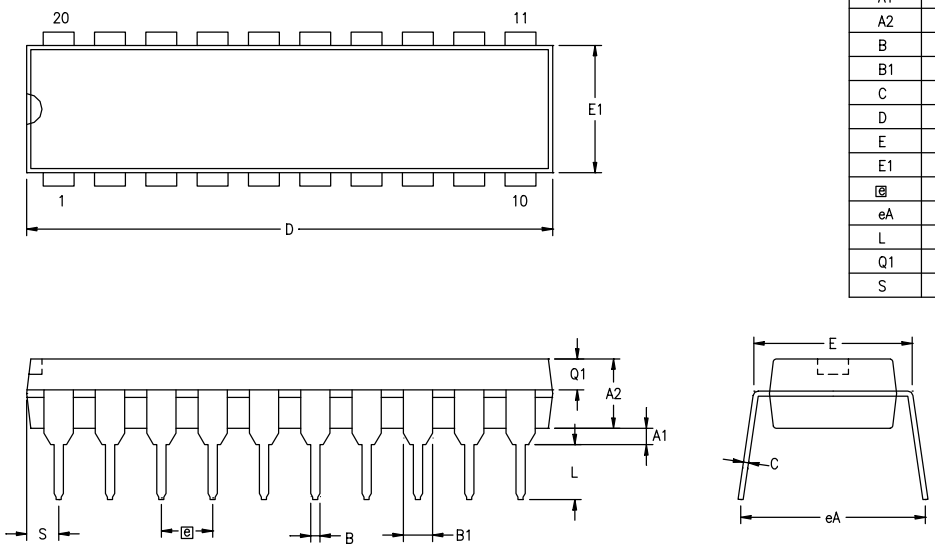

SYMBOL	MILLIMETER		INCH	
	MIN	MAX	MIN	MAX
A1	0.38	0.81	.015	.032
A2	3.25	3.68	.128	.145
B	0.41	0.51	.016	.020
B1	1.47	1.57	.058	.062
C	0.20	0.30	.008	.012
D	25.65	26.16	1.010	1.030
E	7.49	8.26	.295	.325
E1	6.10	6.65	.240	.262
e	2.54 BSC		.100 BSC	
eA	7.87	9.14	.310	.360
L	3.18	3.43	.125	.135
Q1	1.42	1.65	.056	.065
S	1.52	1.65	.060	.065

CONTROLLING DIMENSIONS : INCH

Figure 58. 20-Pin PDIP Package Diagram

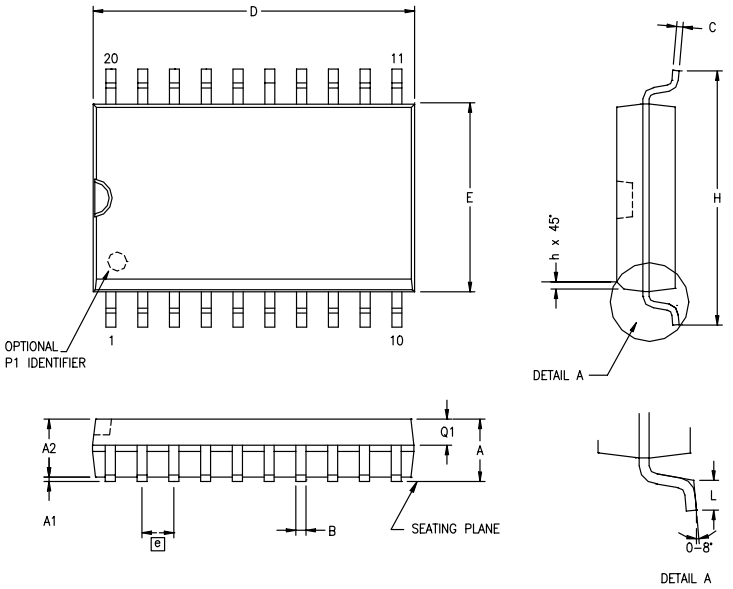

SYMBOL	MILLIMETER		INCH	
	MIN	MAX	MIN	MAX
A	2.40	2.65	.094	.104
A1	0.10	0.30	.004	.012
A2	2.24	2.44	.088	.096
B	0.36	0.46	.014	.018
C	0.23	0.30	.009	.012
D	12.60	12.95	**.496**	.510
E	7.40	7.60	.291	.299
e	1.27 BSC		.050 BSC	
H	10.00	10.65	.394	.419
h	0.30	0.40	.012	.016
L	0.60	1.00	.024	.039
Q1	0.97	1.07	.038	.042

CONTROLLING DIMENSIONS : MM
LEADS ARE COPLANAR WITHIN .004 INCH.

Figure 59. 20-Pin SOIC Package Diagram

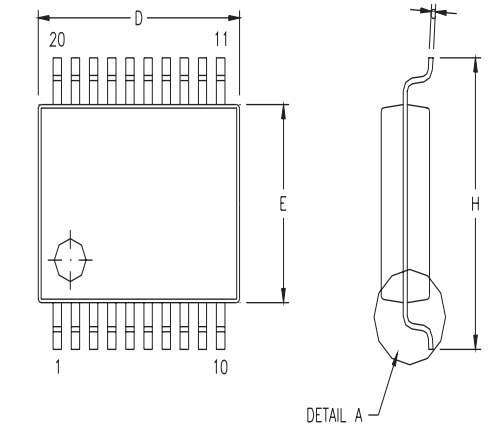

SYMBOL	MILLIMETER			INCH		
	MIN	NOM	MAX	MIN	NOM	MAX
A	1.73	1.85	1.98	0.068	0.073	0.078
A1	0.05	0.13	0.21	0.002	0.005	0.008
A2	1.68	1.73	1.83	0.066	0.068	0.072
B	0.25	0.30	0.38	0.010	0.012	0.015
C	0.13	0.15	0.22	0.005	0.006	0.009
D	7.07	7.20	7.33	0.278	0.283	0.289
E	5.20	5.30	5.38	0.205	0.209	0.212
e	0.65 BSC			0.0256 BSC		
H	7.65	7.80	7.90	0.301	0.307	0.311
L	0.56	0.75	0.94	0.022	0.030	0.037
Q1	0.74	0.78	0.82	0.029	0.031	0.032

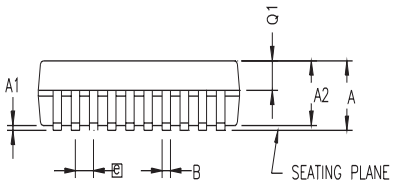

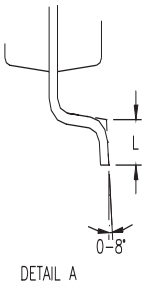

CONTROLLING DIMENSIONS : MM
LEADS ARE COPLANAR WITHIN .004 INCH.

Figure 60. 20-Pin SSOP Package Diagram

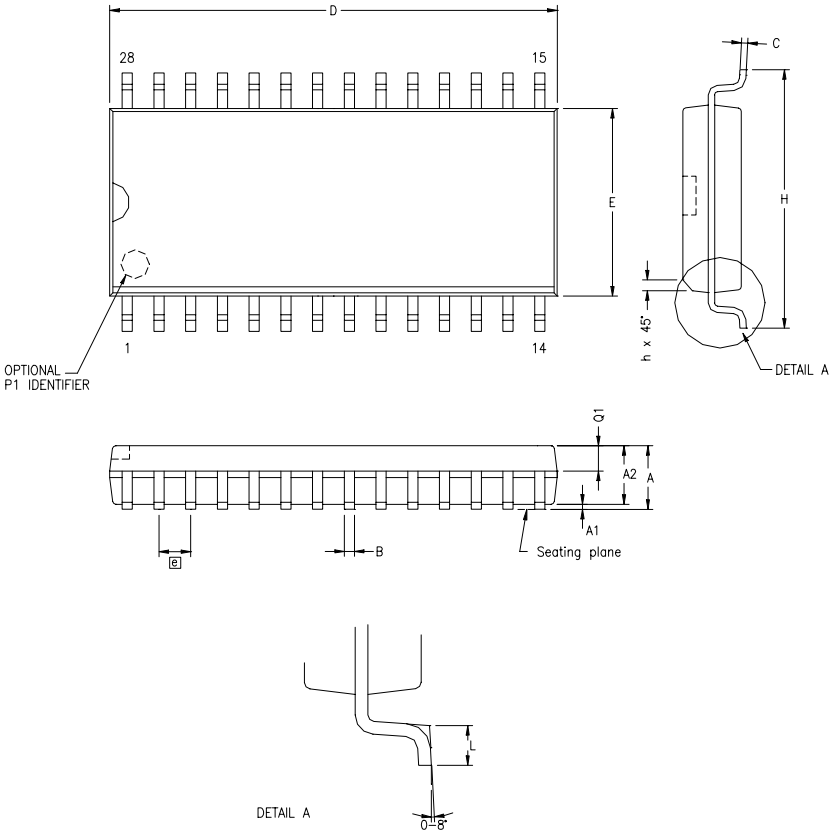

SYMBOL	MILLIMETER		INCH	
	MIN	MAX	MIN	MAX
A	2.40	2.64	.094	.104
A1	0.10	0.30	.004	.012
A2	2.24	2.44	.088	.096
B	0.36	0.46	.014	.018
C	0.23	0.30	.009	.012
D	17.78	18.00	.700	.710
E	7.40	7.60	.291	.299
e	1.27 BSC		.050 BSC	
H	10.00	10.65	.394	.419
h	0.30	0.71	.012	.028
L	0.61	1.00	.024	.039
Q1	0.97	1.09	.038	.043

CONTROLLING DIMENSIONS : MM
LEADS ARE COPLANAR WITHIN .004 INCH.

Figure 61. 28-Pin SOIC Package Diagram

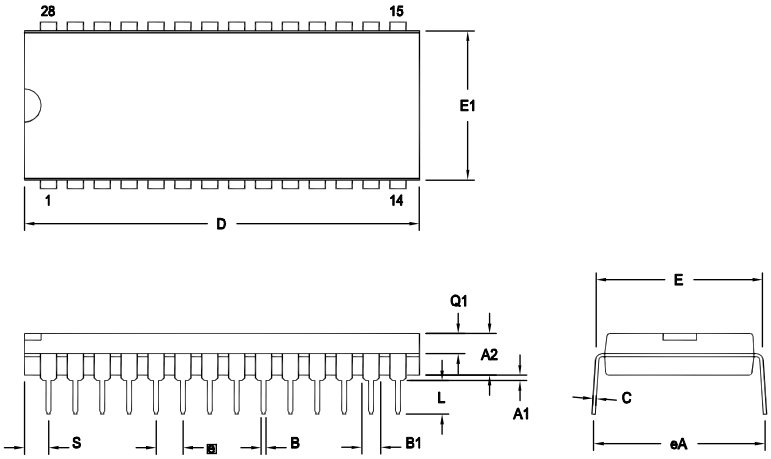

SYMBOL	OPT #	MILLIMETER		INCH	
		MIN	MAX	MIN	MAX
A1		0.38	1.02	.015	.040
A2		3.18	4.19	.125	.165
B		0.38	0.53	.015	.021
B1	01	1.40	1.65	.055	.065
	02	1.14	1.40	.045	.055
C		0.23	0.38	.009	.015
D	01	36.58	37.34	1.440	1.470
	02	35.31	35.94	1.390	1.415
E		15.24	15.75	.600	.620
E1	01	13.59	14.10	.535	.555
	02	12.83	13.08	.505	.515
e		2.54 TYP		.100 BSC	
eA		15.49	16.76	.610	.660
L		3.05	3.81	.120	.150
Q1	01	1.40	1.91	.055	.075
	02	1.40	1.78	.055	.070
S	01	1.52	2.29	.060	.090
	02	1.02	1.52	.040	.060

CONTROLLING DIMENSIONS : INCH

OPTION TABLE	
OPTION #	PACKAGE
01	STANDARD
02	IDF

Note: ZiLOG supplies both options for production. Component layout PCB design should cover bigger option 01.

Figure 62. 28-Pin PDIP Package Diagram

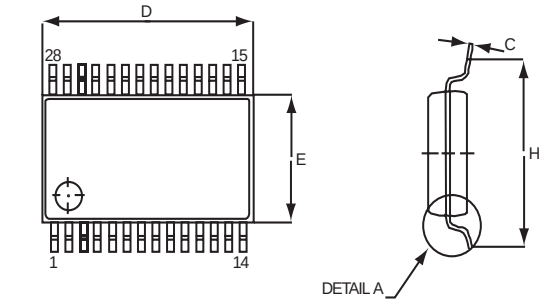

SYMBOL	MILLIMETER			INCH		
	MIN	NOM	MAX	MIN	NOM	MAX
A	1.73	1.86	1.99	0.068	0.073	0.078
A1	0.05	0.13	0.21	0.002	0.005	0.008
A2	1.68	1.73	1.78	0.066	0.068	0.070
B	0.25		0.38	0.010		0.015
C	0.09	–	0.20	0.004	0.006	0.008
D	10.07	10.20	10.33	0.397	0.402	0.407
E	5.20	5.30	5.38	0.205	0.209	0.212
e	0.65 TYP			0.0256 TYP		
H	7.65	7.80	7.90	0.301	0.307	0.311
L	0.63	0.75	0.95	0.025	0.030	0.037

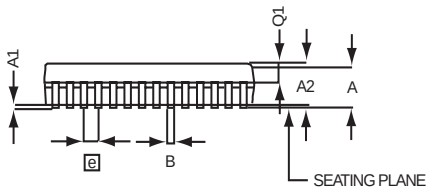

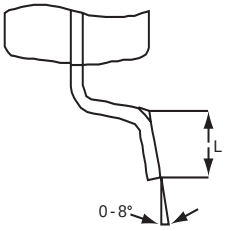

DETAIL 'A'

CONTROLLING DIMENSIONS: MM
LEADS ARE COPLANAR WITHIN .004 INCHES.

Figure 63. 28-Pin SSOP Package Diagram

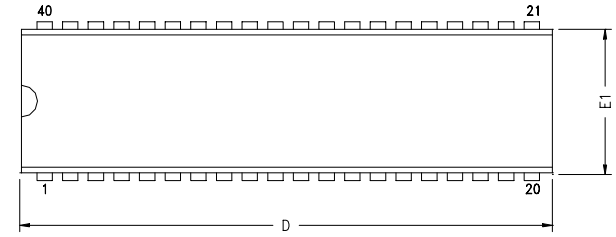

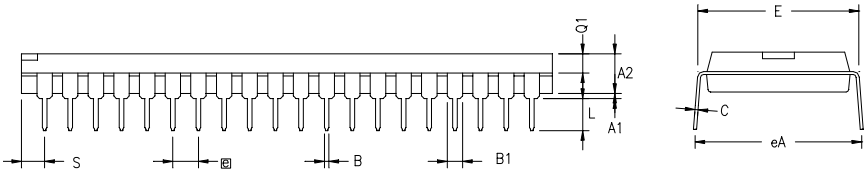

SYMBOL	MILLIMETER		INCH	
	MIN	MAX	MIN	MAX
A1	0.51	1.02	.020	.040
A2	3.18	3.94	.125	.155
B	0.38	0.53	.015	.021
B1	1.02	1.52	.040	.060
C	0.23	0.38	.009	.015
D	52.07	52.58	2.050	2.070
E	15.24	15.75	.600	.620
E1	13.59	14.22	.535	.560
e	2.54 TYP		.100 TYP	
eA	15.49	16.76	.610	.660
L	3.05	3.81	.120	.150
Q1	1.40	1.91	.055	.075
S	1.52	2.29	.060	.090

CONTROLLING DIMENSIONS : INCH

Figure 64. 40-Pin PDIP Package Diagram

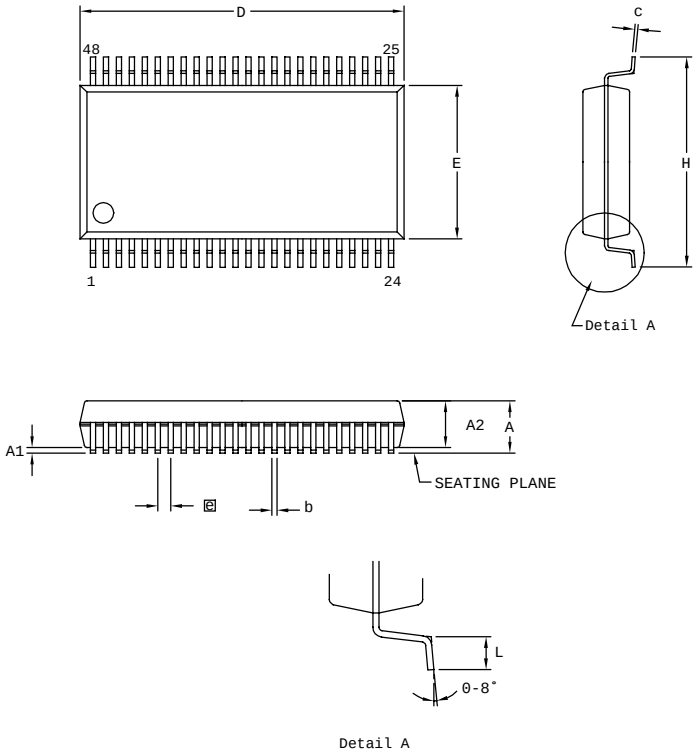

SYMBOL	MILLIMETER		INCH	
	MIN	MAX	MIN	MAX
A	2.41	2.79	0.095	0.110
A1	0.23	0.38	0.009	0.015
A2	2.18	2.39	0.086	0.094
b	0.20	0.34	0.008	0.0135
c	0.13	0.25	0.005	0.010
D	15.75	16.00	0.620	0.630
E	7.39	7.59	0.291	0.299
e	0.635 BSC		0.025 BSC	
H	10.16	10.41	0.400	0.410
L	0.51	1.016	0.020	0.040

CONTROLLING DIMENSIONS : MM
LEADS ARE COPLANAR WITHIN .004 INCH

Figure 65. 48-Pin SSOP Package Design

Note: *Contact Zilog® on the actual bonding diagram and coordinate for chip-on-board assembly.*

Ordering Information

The Crimzon ZLP32300 is available for the following parts:

Device	Part Number	Description
Crimzon ZLP32300	ZLP32300H4832G	48-pin SSOP 32 K OTP
	ZLP32300P4032G	40-pin PDIP 32 K OTP
	ZLP32300H2832G	28-pin SSOP 32 K OTP
	ZLP32300P2832G	28-pin PDIP 32 K OTP
	ZLP32300S2832G	28-pin SOIC 32 K OTP
	ZLP32300H2032G	20-pin SSOP 32 K OTP
	ZLP32300P2032G	20-pin PDIP 32 K OTP
	ZLP32300S2032G	20-pin SOIC 32 K OTP
	ZLP32300H4816G	48-pin SSOP 16 K OTP
	ZLP32300P4016G	40-pin PDIP 16 K OTP
	ZLP32300H2816G	28-pin SSOP 16 K OTP
	ZLP32300P2816G	28-pin PDIP 16 K OTP
	ZLP32300S2816G	28-pin SOIC 16 K OTP
	ZLP32300H2016G	20-pin SSOP 16 K OTP
	ZLP32300P2016G	20-pin PDIP 16 K OTP
	ZLP32300S2016G	20-pin SOIC 16 K OTP
	ZLP32300H4808G	48-pin SSOP 8 K OTP
	ZLP32300P4008G	40-pin PDIP 8 K OTP
	ZLP32300H2808G	28-pin SSOP 8 K OTP
	ZLP32300P2808G	28-pin PDIP 8 K OTP
	ZLP32300S2808G	28-pin SOIC 8 K OTP
	ZLP32300H2008G	20-pin SSOP 8 K OTP

Device	Part Number	Description
	ZLP32300P2008G	20-pin PDIP 8 K OTP
	ZLP32300S2008G	20-pin SOIC 8 K OTP
	ZLP32300H4804G	48-pin SSOP 4 K OTP
	ZLP32300P4004G	40-pin PDIP 4 K OTP
	ZLP32300H2804G	28-pin SSOP 4 K OTP
	ZLP32300P2804G	28-pin PDIP 4 K OTP
	ZLP32300S2804G	28-pin SOIC 4 K OTP
	ZLP32300H2004G	20-pin SSOP 4 K OTP
	ZLP32300P2004G	20-pin PDIP 4 K OTP
	ZLP32300S2004G	20-pin SOIC 4 K OTP
	ZLP323ICE01ZAC*	40-PDIP/48-SSOP Accessory Kit
	Note: *ZLP323ICE01ZAC has been replaced by an improved version, ZCRMZNICE02ZACG.	
	ZLP128ICE01ZEMG	In-Circuit Emulator
	Note: *ZLP128ICE01ZEMG has been replaced by an improved version, ZCRMZNICE01ZEMG.	
	ZCRMZNICE01ZEMG	Crimzon In-Circuit Emulator
	ZCRMZN00100KITG	Crimzon In-Circuit Emulator Development Kit
	ZCRMZNICE01ZACG	20-Pin Accessory Kit
	ZCRMZNICE02ZACG	40/48-Pin Accessory Kit

Notes
1. Replace C with G for Lead-Free Packaging.
2. Contact www.zilog.com for the die form.

For fast results, contact your local Zilog® sales office for assistance in ordering the part(s) desired.

Part Number Description

Zilog® part numbers consist of a number of components, as shown below. ZLP32300H2832G is a Crimzon ZLP32300 OTP product in a 28-pin SSOP package, with 32 KB of OTP and built with lead-free solder.

Z LP 32300 H 28 32 G

Environmental Flow
G = Lead Free

Memory Size
32 = 32 KB
16 = 16 KB
8 = 8 KB
4 = 4 KB

Number of Pins in Package
48 = 48 Pins
40 = 40 Pins
28 = 28 Pins
20 = 20 Pins

Package Type
H = SSOP
P = PDIP
S = SOIC

Product Number
32300

Product Line
Crimzon ZLP32300 OTP

Zilog Product Prefix

Index

Numerics

16-bit counter/timer circuits 40
20-pin DIP package diagram 80
20-pin SSOP package diagram 82
28-pin DIP package diagram 84
28-pin SOIC package diagram 83
28-pin SSOP package diagram 85
40-pin DIP package diagram 85
48-pin SSOP package diagram 86
8-bit counter/timer circuits 36

A

absolute maximum ratings 75
AC
    characteristics 78
    timing diagram 78
address spaces, basic 1
architecture 1
    expanded register file 22

B

basic address spaces 1
block diagram, ZLP32300 functional 3

C

capacitance 76
characteristics
    AC 78
    DC 76
clock 46
comparator inputs/outputs 18
configuration
    port 0 12
    port 1 13
    port 2 14
    port 3 15
    port 3 counter/timer 17
counter/timer
    16-bit circuits 40
    8-bit circuits 36
    brown-out voltage/standby 58
    clock 46
    demodulation mode count capture flowchart 38
    demodulation mode flowchart 39
    EPROM selectable options 58
    glitch filter circuitry 34
    halt instruction 47
    input circuit 33
    interrupt block diagram 44
    interrupt types, sources and vectors 45
    oscillator configuration 46
    output circuit 43
    port configuration register 48
    resets and WDT 57
    SCLK circuit 50
    stop instruction 47
    stop mode recovery register 49
    stop mode recovery register 2 54
    stop mode recovery source 52
    T16 demodulation mode 41
    T16 transmit mode 40
    T16_OUT in modulo-N mode 41
    T16_OUT in single-pass mode 41
    T8 demodulation mode 37
    T8 transmit mode 34
    T8_OUT in modulo-N mode 37
    T8_OUT in single-pass mode 37
    transmit mode flowchart 35
    voltage detection and flags 59
    watch-dog timer mode register 55
    watch-dog timer time select 56
CTR(D)01h T8 and T16 Common Functions 29

D

DC characteristics 76
demodulation mode
    count capture flowchart 38
    flowchart 39
    T16 41

T8 37
description
functional 19
general 3
pin 5

E

EPROM
selectable options 58
expanded register file 20
expanded register file architecture 22
expanded register file control registers 64
flag 73
interrupt mask register 72
interrupt priority register 71
interrupt request register 72
port 0 and 1 mode register 70
port 2 configuration register 69
port 3 mode register 69
port configuration register 69
register pointer 73
stack pointer high register 74
stack pointer low register 74
stop mode recovery register 66
stop mode recovery register 2 67
T16 control register 62
T8 and T16 common control functions register 61
T8/T16 control register 63
TC8 control register 60
watchdog timer register 68

F

features
standby modes 2
ZLP32300 2
functional description
counter/timer functional blocks 33
CTR(D)01h register 28
CTR0(D)00h register 27
CTR2(D)02h register 31
CTR3(D)03h register 33
expanded register file 20
expanded register file architecture 22
HI16(D)09h register 26
HI8(D)0Bh register 25
L08(D)0Ah register 26
L0I6(D)08h register 26
program memory map 20
RAM 19
register description 58
register file 24
register pointer 23
register pointer detail 25
SMR2(F)0D1h register 33
stack 25
TC16H(D)07h register 26
TC16L(D)06h register 26
TC8H(D)05h register 27
TC8L(D)04h register 27

G

glitch filter circuitry 34

H

halt instruction, counter/timer 47

I

input circuit 33
interrupt block diagram, counter/timer 44
interrupt types, sources and vectors 45

L

low-voltage detection register 58

M

memory, program 19
modulo-N mode
T16_OUT 41
T8_OUT 37

O

oscillator configuration 46
output circuit, counter/timer 43

P

package information
    20-pin DIP package diagram 80
    20-pin SSOP package diagram 82
    28-pin DIP package diagram 84
    28-pin SOIC package diagram 83
    28-pin SSOP package diagram 85
    40-pin DIP package diagram 85
    48-pin SSOP package diagram 86
part number format 89
pin configuration
    20-pin DIP/SOIC/SSOP 5
    28-pin DIP/SOIC/SSOP 6
    40- and 48-pin 8
    40-pin DIP 7
    48-pin SSOP 8
pin functions
    port 0 (P07 - P00) 11
    port 0 (P17 - P10) 12
    port 0 configuration 12
    port 1 configuration 13
    port 2 (P27 - P20) 13
    port 2 (P37 - P30) 14
    port 2 configuration 14
    port 3 configuration 15
    port 3 counter/timer configuration 17
    reset) 18
    XTAL1 (time-based input 10
    XTAL2 (time-based output) 10
port 0 configuration 12
port 0 pin function 11
port 1 configuration 13
port 1 pin function 12
port 2 configuration 14
port 2 pin function 13
port 3 configuration 15
port 3 pin function 14
port 3counter/timer configuration 17
port configuration register 48
power connections 1
power supply 5
program memory 19
    map 20

R

ratings, absolute maximum 75
register 54
    CTR(D)01h 28
    CTR0(D)00h 27
    CTR2(D)02h 31
    CTR3(D)03h 33
    flag 73
    HI16(D)09h 26
    HI8(D)0Bh 25
    interrupt priority 71
    interrupt request 72
    interruptmask 72
    L016(D)08h 26
    L08(D)0Ah 26
    LVD(D)0Ch 58
    pointer 73
    port 0 and 1 70
    port 2 configuration 69
    port 3 mode 69
    port configuration 48, 69
    SMR2(F)0Dh 33
    stack pointer high 74
    stack pointer low 74
    stop mode recovery 49
    stop mode recovery 2 54
    stop mode recovery 66
    stop mode recovery 2 67
    T16 control 62
    T8 and T16 common control functions 61
    T8/T16 control 63
    TC16H(D)07h 26
    TC16L(D)06h 26
    TC8 control 60
    TC8H(D)05h 27
    TC8L(D)04h 27
    voltage detection 64
    watch-dog timer 68

register description
Counter/Timer2 LS-Byte Hold 26
Counter/Timer2 MS-Byte Hold 26
Counter/Timer8 Control 27
Counter/Timer8 High Hold 27
Counter/Timer8 Low Hold 27
CTR2 Counter/Timer 16 Control 31
CTR3 T8/T16 Control 33
Stop Mode Recovery2 33
T16_Capture_LO 26
T8 and T16 Common functions 28
T8_Capture_HI 25
T8_Capture_LO 26
register file 24
expanded 20
register pointer 23
detail 25
reset pin function 18
resets and WDT 57

S

SCLK circuit 50
single-pass mode
T16_OUT 41
T8_OUT 37
stack 25
standard test conditions 75
standby modes 2
stop instruction, counter/timer 47
stop mode recovery
2 register 54
source 52
stop mode recovery 2 54
stop mode recovery register 49

T

T16 transmit mode 40
T16_Capture_HI 26
T8 transmit mode 34
T8_Capture_HI 25
test conditions, standard 75
test load diagram 75
timing diagram, AC 78
transmit mode flowchart 35

V

VCC 5
voltage
brown-out/standby 58
detection and flags 59
voltage detection register 64

W

watchdog timer
mode register watchdog timer mode register 55
time select 56

X

XTAL1 5
XTAL1 pin function 10
XTAL2 5
XTAL2 pin function 10

Z

ZLP32300 family members 2

Customer Support

For answers to technical questions about the product, documentation, or any other issues with Zilog's offerings, please visit Zilog's Knowledge Base at http://www.zilog.com/kb.

For any comments, detail technical questions, or reporting problems, please visit Zilog's Technical Support at http://support.zilog.com.

Мы молодая и активно развивающаяся компания в области поставок электронных компонентов. Мы поставляем электронные компоненты отечественного и импортного производства напрямую от производителей и с крупнейших складов мира.

Благодаря сотрудничеству с мировыми поставщиками мы осуществляем комплексные и плановые поставки широчайшего спектра электронных компонентов.

Собственная эффективная логистика и склад в обеспечивает надежную поставку продукции в точно указанные сроки по всей России.

Мы осуществляем техническую поддержку нашим клиентам и предпродажную проверку качества продукции. На все поставляемые продукты мы предоставляем гарантию .

Осуществляем поставки продукции под контролем ВП МО РФ на предприятия военно-промышленного комплекса России , а также работаем в рамках 275 ФЗ с открытием отдельных счетов в уполномоченном банке. Система менеджмента качества компании соответствует требованиям ГОСТ ISO 9001.

Минимальные сроки поставки, гибкие цены, неограниченный ассортимент и индивидуальный подход к клиентам являются основой для выстраивания долгосрочного и эффективного сотрудничества с предприятиями радиоэлектронной промышленности, предприятиями ВПК и научно-исследовательскими институтами России.

С нами вы становитесь еще успешнее!

Наши контакты:

Телефон: +7 812 627 14 35

Электронная почта: sales@st-electron.ru

Адрес: 198099, Санкт-Петербург, Промышленная ул, дом № 19, литера Н, помещение 100-Н Офис 331