RoHS Recast Compliant

Industrial Micro SD 3.0

microSDHC Product Specifications

December 22, 2014

Version 1.2

Apacer Technology Inc.
1F, No.32, Zhongcheng Rd., Tucheng Dist., New Taipei City, Taiwan, R.O.C
Tel: +886-2-2267-8000 Fax: +886-2-2267-2261
www.apacer.com

FEATURES:

- **Fully compatible with SD Card Association specifications**
  - Part 1, Physical Layer Specification, Ver 3.01 Final
  - Part 2, File System Specification, Ver 3.00
  - Part 3, Security Specification, Ver 3.00 Final
- **Capacity range**
  - 4, 8, 16, 32 GB
- **Performance***
  - Sustained Read: Up to 34 MB/sec
  - Sustained Write: Up to 25 MB/sec
- **SD-protocol compatible**
- **Supports SD SPI mode**
- **Backward compatible with 2.0**
- **NAND Flash Type: MLC**
- **Write Protect feature**
- **UHS-I bus speed mode**
- **Flash management**
  - Built-in advanced ECC algorithm
  - Wear-leveling
  - Flash bad-block management
  - SMART
- **Temperature ranges**
  - Operating temperature:
    Commercial: -25 ~ +85°C
    Extended: -40 ~ +85°C
  - Storage temperature: -40°C ~ +85°C
- **Operating voltage: 2.7V ~ 3.6V**
- **Power consumption***
  - Operating: 55 mA
  - Standby: 135 uA
- **Physical dimension :**
  15mm(L) x 11mm(W) x 1mm(H)
- **RoHS Recast Compliant**

*Performance values presented here are typical and may vary depending on settings and platforms.

© 2014 Apacer Technology, Inc.

TABLE OF CONTENTS

1. General Description 3

1.1 Product Function Block 3
1.2 Flash Management 3
1.2.1 Bad Block Management *3*
1.2.2 Powerful ECC Algorithms *3*
1.2.3 Wear Leveling *4*
1.2.4 S.M.A.R.T. *4*

2. Electrical characteristics 5

2.1 Card Architecture 5
2.2 Pin Assignment 5
2.3 Capacity Specification 6
2.4 Performance 6
2.5 Electrical 6

3. Physical Characteristics 7

3.1 Physical Dimension 7
3.2 Environmental Specifications 9

4. AC Characteristics 10

4.1 Micro SD Interface Timing (Default) 10
4.2 Micro SD Interface Timing (High Speed Mode) 11
4.3 SD Interface Timing (SDR12, SDR25 and SDR50 Modes) Input 12
4.3.1 SDR50 Input Timing *13*
4.3.2 Output *13*
4.3.3 SD Interface Timing (DDR50 Mode) *14*
4.3.4 Bus Timings – Parameters Values (DDR50 Mode) *15*

5. Product Ordering Information 16

5.1 Product Code Designations 16
5.2 Valid Combinations 17
5.2.1 Standard Temperature *17*
5.2.2 Extended Temperature *17*

© 2014 Apacer Technology, Inc.

1. General Description

The Micro Secure Digital (microSD) card version 3.0 is fully compliant to the specification released by SD Card Association. The Command List supports [Part 1 Physical Layer Specification Ver3.01 Final] definitions. Card Capacity of Non-secure Area, Secure Area Supports [Part 3 Security Specification Ver3.00 Final] Specifications.

The microSD 3.0 card comes with 8-pin interface, designed to operate at optimal performance. It can alternate communication protocol between the SD mode and SPI mode. It performs data error detection and correction with very low power consumption.

Apacer Industrial micro Secure Digital 3.0 card is ideal for its high performance, good reliability and wide compatibility. Not to mention that it's well adapted for hand-held applications in semi-industrial/medical markets already. The new microSD 3.0 card is capable of delivering better performance and P/E cycles.

1.1 Product Function Block

The Micro SD contains a card controller and a memory core for the SD standard interface.

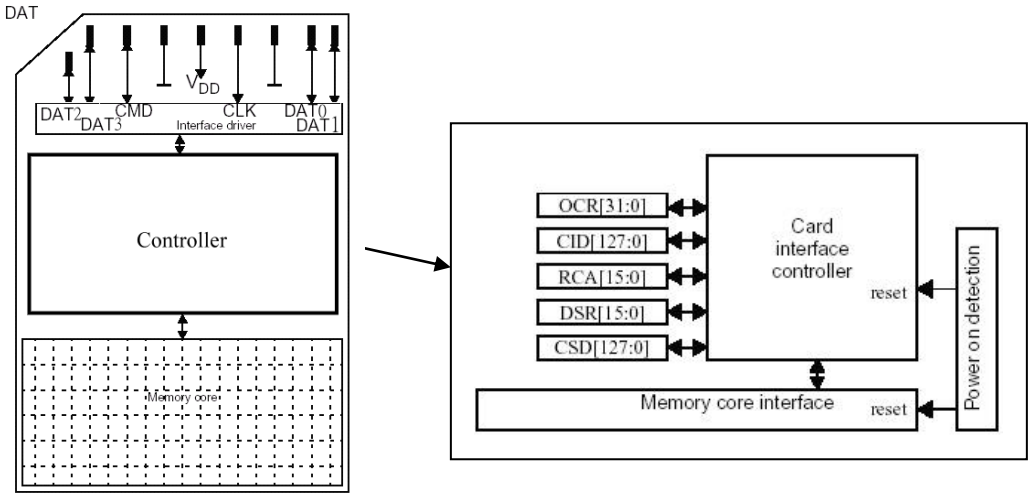

1.2 Flash Management

1.2.1 Bad Block Management

Bad blocks are blocks that include one or more invalid bits, and their reliability is not guaranteed. Blocks that are identified and marked as bad by the manufacturer are referred to as "Initial Bad Blocks". Bad blocks that are developed during the lifespan of the flash are named "Later Bad Blocks". Apacer implements an efficient bad block management algorithm to detect the factory-produced bad blocks and manages any bad blocks that appear with use. This practice further prevents data being stored into bad blocks and improves the data reliability.

1.2.2 Powerful ECC Algorithms

Flash memory cells will deteriorate with use, which might generate random bit errors in the stored data. Thus, the microSD card applies the BCH ECC Algorithm, which can detect and correct errors occur during read process, ensure data been read correctly, as well as protect data from corruption.

© 2014 Apacer Technology, Inc.

1.2.3 Wear Leveling

NAND Flash devices can only undergo a limited number of program/erase cycles, and in most cases, the flash media are not used evenly. If some area get updated more frequently than others, the lifetime of the device would be reduced significantly. Thus, Wear Leveling technique is applied to extend the lifespan of NAND Flash by evenly distributing writes and erase cycles across the media.
Apacer provides advanced Wear Leveling algorithm, which can efficiently spread out the flash usage through the whole flash media area. Moreover, by implementing both dynamic and static Wear Leveling algorithms, the life expectancy of the NAND Flash is greatly improved.

1.2.4 S.M.A.R.T.

SMART, an acronym for Self-Monitoring, Analysis and Reporting Technology, is an special function that allows a memory device to automatically monitor its health. Apacer provides a program named SmartInfo Tool to observe Apacer's SD and microSD cards. Note that this tool can only support Apacer's industrial SD and microSD cards. This tool will display firmware version, endurance life ratio, good block ratio, and so forth.

© 2014 Apacer Technology, Inc.

2. Electrical characteristics

2.1 Card Architecture

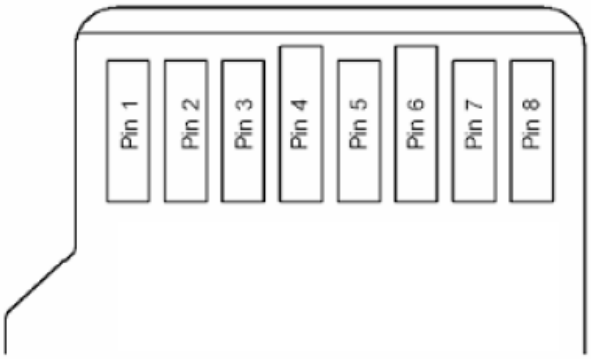

2.2 Pin Assignment

Table 2-1: Ping Descriptions

Pin	SD Mode		SPI Mode	
	Name	Description	Name	Description
1	DAT2	Data line[bit 2]	Reserved	
2	CD/DAT3 [2]	Card Detect/Data line [bit 3]	CS	Chip select
3	CMD	Command/Response	DI	Data in
4	VDD	Supply voltage	VDD	Supply voltage
5	CLK	Clock	SCLK	Clock
6	VSS	Supply voltage ground	VSS	Supply voltage ground
7	DAT0	Data line[bit 0]	DO	Data out
8	DAT1	Data line[bit 1]	Reserved	

© 2014 Apacer Technology, Inc.

2.3 Capacity Specification

The following table shows the specific capacity for the SD 3.0 card.

Table 2-2: Capacity

Capacity	Total Bytes
4 GB	3,972,005,888
8 GB	7,960,788,992
16 GB	16,013,852,672
32 GB	32,099,008,512

Note: total bytes are viewed under Windows operating system and were measured by SD format too.

2.4 Performance

Performances of the SD 3.0 card are shown in the table below.

Table 2-3: Performance

Capacity / Modes	4 GB	8 GB	16 GB	32 GB
Read (MB/s)	35	34	34	34
Write (MB/s)	11	22	25	25

Note: results may vary depending on settings and platforms.

2.5 Electrical

Table 2-4: Operating Voltages

Symbol	Parameter	Min.	Max.	Unit
V_{DD}	Power Supply Voltage	2.7	3.6	V

Table 2-5: Power consumption

Capacity / Modes	4 GB	8 GB	16 GB	32 GB
Operating (**mA**)	55	70	90	140
Standby (**uA**)	135	145	155	200

Note: results may vary depending on settings and platforms.

© 2014 Apacer Technology, Inc.

3. Physical Characteristics

3.1 Physical Dimension

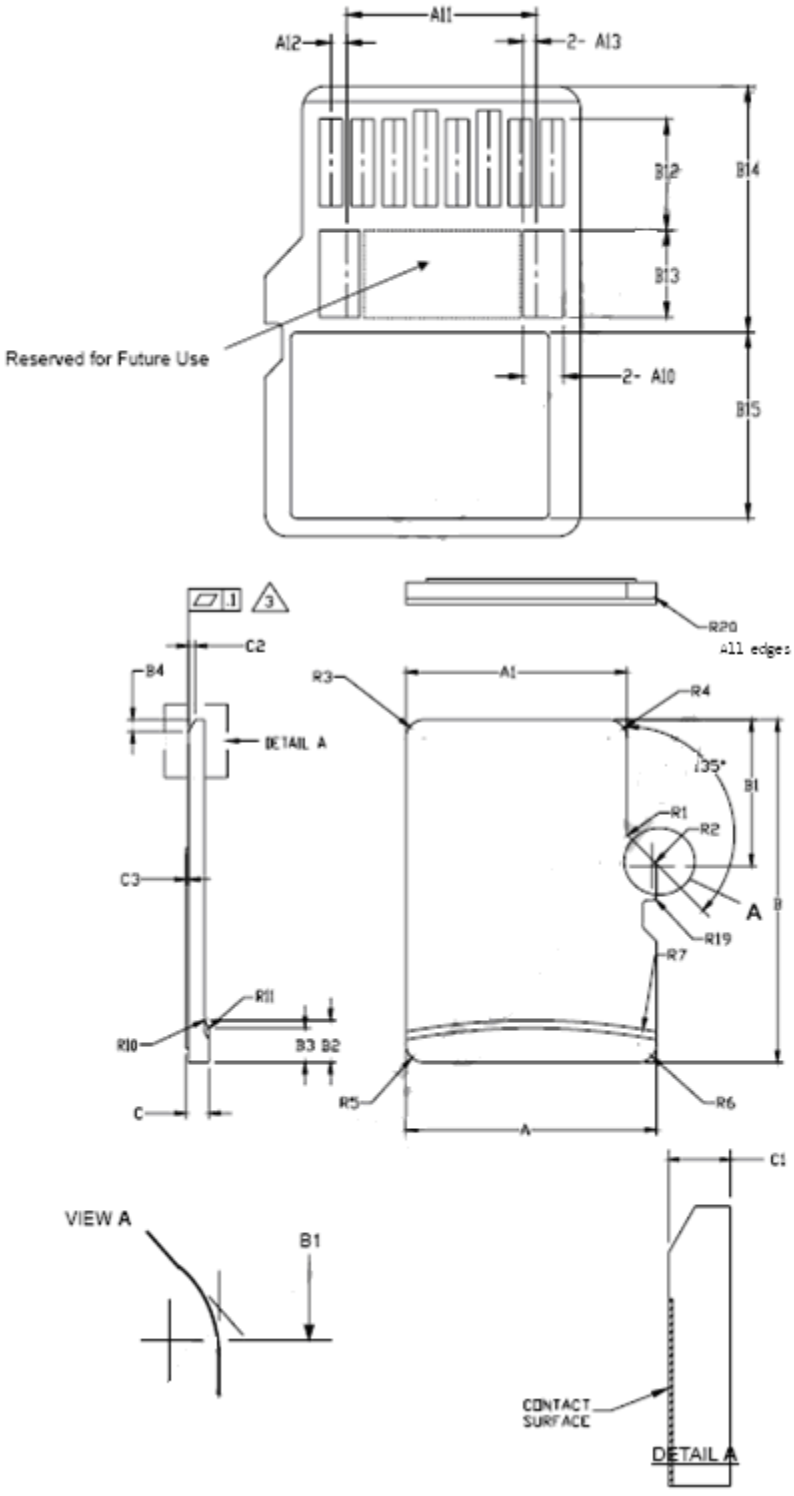

© 2014 Apacer Technology, Inc.

	COMMON DIMENSIONS			
SYMBOL	MIN	NOM	MAX	NOTE
A	10.90	11.00	11.10	
A1	9.60	9.70	9.80	
A2	-	3.85	-	BASIC
A3	7.60	7.70	7.80	
A4	-	1.10	-	BASIC
A5	0.75	0.80	0.85	
A6	-	-	8.50	
A7	0.90	-	-	
A8	0.60	0.70	0.80	
A9	0.80	-	-	
A10	1.35	1.40	1.45	
A11	6.50	6.60	6.70	
A12	0.50	0.55	0.60	
A13	0.40	0.45	0.50	
B	14.90	15.00	15.10	
B1	6.30	6.40	6.50	
B2	1.64	1.84	2.04	
B3	1.30	1.50	1.70	
B4	0.42	0.52	0.62	
B5	2.80	2.90	3.00	
B6	5.50	-	-	
B7	0.20	0.30	0.40	
B8	1.00	1.10	1.20	
B9	-	-	9.00	
B10	7.80	7.90	8.00	
B11	1.10	1.20	1.30	
B12	3.60	3.70	3.80	
B13	2.80	2.90	3.00	
B14	8.20	-	-	
B15	-	-	6.20	
C	0.90	1.00	1.10	
C1	0.60	0.70	0.80	
C2	0.20	0.30	0.40	
C3	0.00	-	0.15	
D1	1.00	-	-	
D2	1.00	-	-	
D3	1.00	-	-	
R1	0.20	0.40	0.60	
R2	0.20	0.40	0.60	
R3	0.70	0.80	0.90	
R4	0.70	0.80	0.90	
R5	0.70	0.80	0.90	
R6	0.70	0.80	0.90	
R7	29.50	30.00	30.50	
R10	-	0.20	-	
R11	-	0.20	-	
R17	0.10	0.20	0.30	
R18	0.20	0.40	0.60	
R19	0.05	-	0.20	
R20	0.02	-	0.15	

Notes:

1. DIMENSIONING AND TOLERANCING PER ASME Y14.5M-1994.
2. DIMENSIONS ARE IN MILLIMETERS.
3. COPLANARITY IS ADDITIVE TO C1 MAX. THICKNESS.

© 2014 Apacer Technology, Inc.

3.2 Environmental Specifications

Table 3-1: Environment specifications

Environment	Specification
Temperature	-25°C to 85°C (Operating) -40°C to 85°C (Extended)
	-40°C to 85°C (in storage)
Humidity	RH 90% under 40°C
Shock	1500G, 0.5ms
Vibration	20Hz~80Hz/1.52mm (frequency/displacement) 80Hz~2000Hz/20G (frequency/displacement) X, Y, Z axis/60mins each
Drop	150cm free fall, 6 face of each
Bending	≧10N, hold 1min/5times
Torque	0.1N-m or 2.5deg, hold 5min/5times
Salt spray	Concentration: 3% NaCl at 35°C (storage for 24 hours)
Waterproof	JIS IPX7 compliance Water temperature 25°C Water depth: the lowest point of unit is locating 1000mm below surface (storage for 30 mins)
X-Ray Exposure	0.1 Gy of medium-energy radiation (70 KeV to 140 KeV, cumulative dose per year) to both sides of the card (storage for 30 mins)
Switch cycle	0.4~0.5N, 1000 times
Durability	10,000 times mating cycle
ESD	Pass

© 2014 Apacer Technology, Inc.

4. AC Characteristics

4.1 Micro SD Interface Timing (Default)

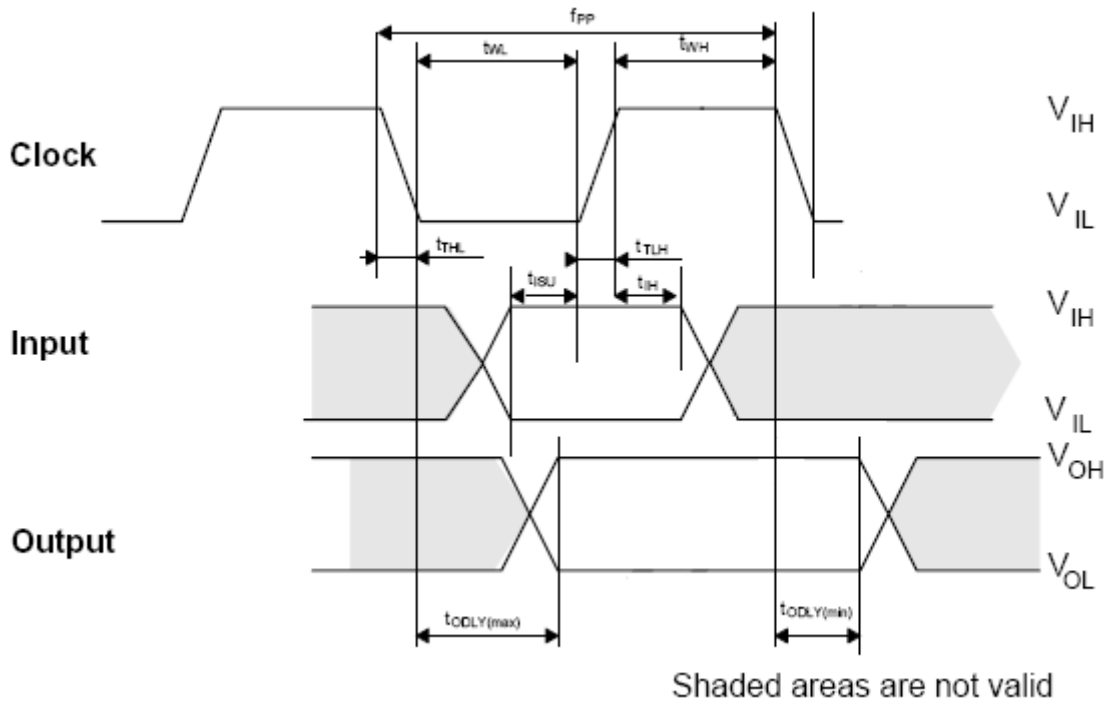

SYMBOL	PARAMETER	MIN	MAX	UNIT	Note
Clock CLK (All values are referred to min(V_{IH}) and max(V_{IL})					
f_{PP}	Clock frequency Data Transfer Mode	0	25	MHz	C_{card}≤10 pF (1 card)
f_{OD}	Clock frequency Identification Mode	$0_{(1)}$/100	400	kHz	C_{card}≤10 pF (1 card)
t_{WL}	Clock low time	10	-	ns	C_{card}≤10 pF (1 card)
t_{WH}	Clock high time	10	-	ns	C_{card}≤10 pF (1 card)
t_{TLH}	Clock rise time	-	10	ns	C_{card}≤10 pF (1 card)
t_{THL}	Clock fall time	-	10	ns	C_{card}≤10 pF (1 card)
t_{ISU}	Input setup time	5	-	ns	C_{card}≤10 pF (1 card)
t_{IH}	Input hold time	5	-	ns	C_{card}≤10 pF (1 card)

© 2014 Apacer Technology, Inc.

t_{ODLY}	Output delay time	0	14	ns	C_L≤40 pF (1 card)
t_{ODLY}	Output Delay time during Identification Mode	0	50	ns	C_L≤40 pF (1 card)

(1)0Hz means to stop the clock. The given minimum frequency range is for cases that requires the clock to be continued.

4.2 Micro SD Interface Timing (High Speed Mode)

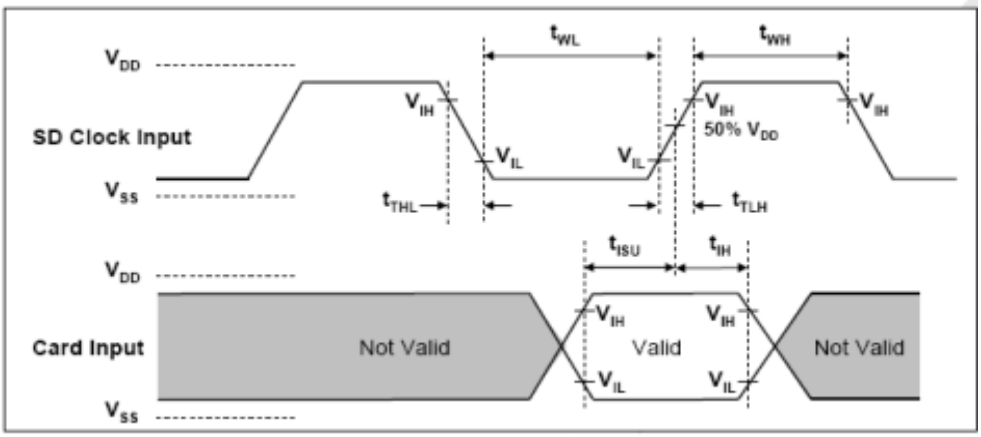

Card Input Timing (High Speed Card)

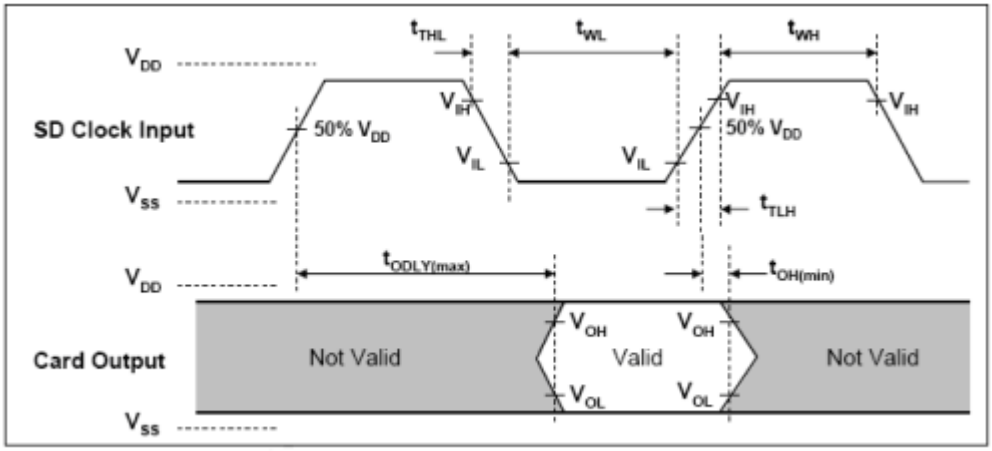

Card Output Timing (High Speed Mode)

SYMBOL	PARAMETER	MIN	MAX	UNIT	Note
f_{PP}	Clock frequency data transfer mode	0	50	MHz	Ccard≤10 pF (1 card)
t_{WL}	Clock low time	7	-	ns	Ccard≤10 pF (1 card)
t_{WH}	Clock high time	7	-	ns	Ccard≤10 pF (1 card)
t_{TLH}	Clock rise time	-	3	ns	Ccard≤10 pF (1 card)
t_{THL}	Clock fall time	-	3	ns	Ccard≤10 pF (1 card)
t_{ISU}	Input setup time	6	-	ns	Ccard≤10 pF (1 card)

© 2014 Apacer Technology, Inc.

t_{IH}	Input hold time	2	-	ns	Ccard≦10 pF (1 card)
t_{ODLY}	Output delay time		14	ns	CL≤40 pF (1 card)
t_{OH}	Output hold time	2.5	50	ns	CL≤15 pF (1 card)
C_L	System capacitance of each line*		40	pF	CL≤15 pF (1 card)

*In order to satisfy severe timing, host shall run on only one card

4.3 SD Interface Timing (SDR12, SDR25 and SDR50 Modes) Input

Symbol	Min	Max	Unit	Remark
t_{CLK}	4.80	-	ns	208MHz (Max.), Between rising edge, VCT= 0.975V
t_{CR}, t_{CF}	-	0.2* t_{CLK}	ns	t_{CR}, t_{CF} < 2.00ns (max.) at 100MHz, CCARD=10pF
Clock Duty	30	70	%	

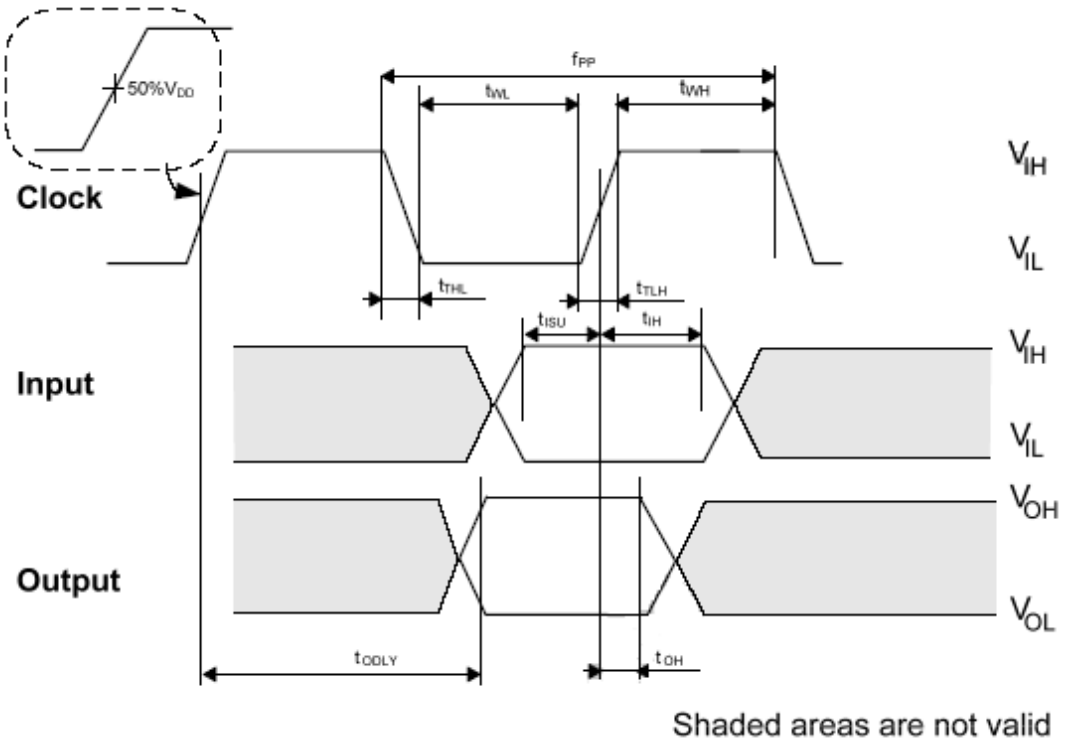

© 2014 Apacer Technology, Inc.

4.3.1 SDR50 Input Timing

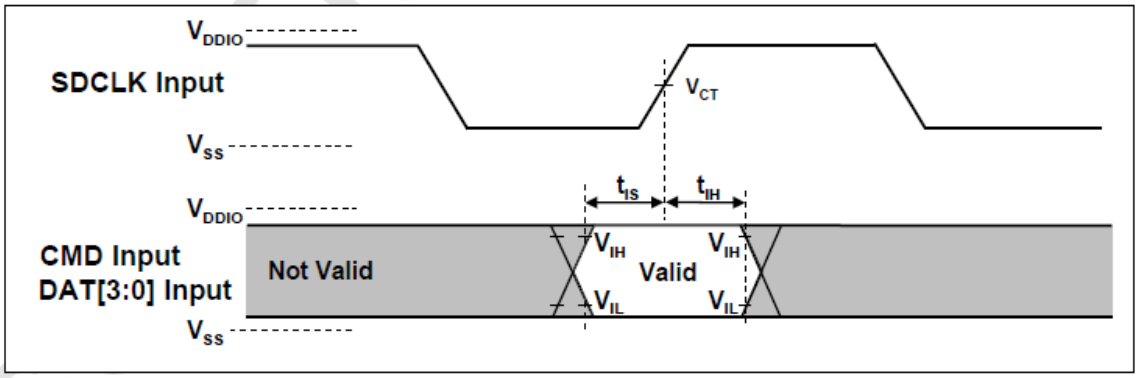

Card Input Timing

Symbol	Min	Max	Unit	SDR50 Mode
t_{IS}	3.00	-	ns	CCARD =10pF, VCT= 0.975V
t_{IH}	0.80	-	ns	CCARD =5pF, VCT= 0.975V

4.3.2 Output

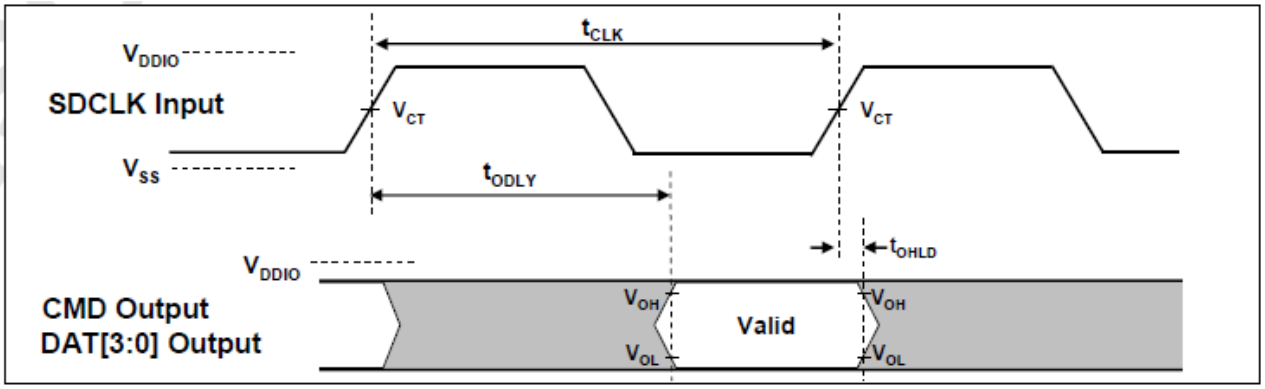

Output Timing of Fixed Data Window

Symbol	Min	Max	Unit	Remark
t_{ODLY}	-	7.5	ns	t_{CLK}>=10.0ns, CL=30pF, using driver Type B, for SDR50
t_{ODLY}	-	14	ns	t_{CLK}>=20.0ns, CL=40pF, using driver Type B, for SDR25 and SDR12,
T_{OH}	1.5	-	ns	Hold time at the t_{ODLY} (min.), CL=15pF

© 2014 Apacer Technology, Inc.

4.3.3 SD Interface Timing (DDR50 Mode)

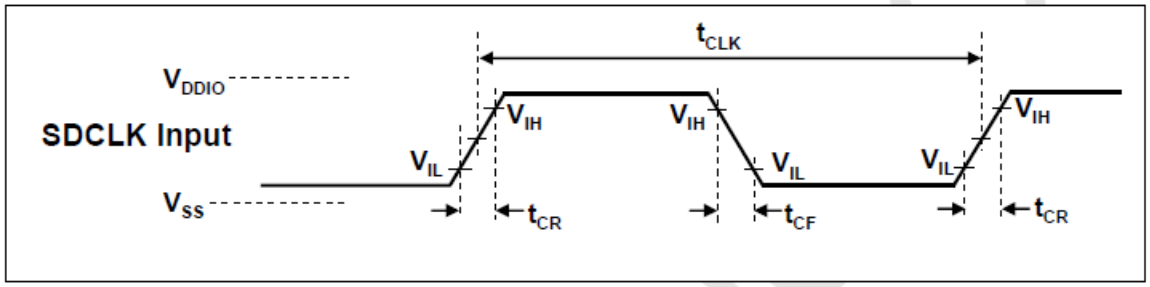

Clock Signal Timing

Symbol	Min	Max	Unit	Remark
t_{CLK}	20	-	ns	50MHz (Max.), Between rising edge
t_{CR}, t_{CF}	-	0.2* t_{CLK}	ns	t_{CR}, t_{CF} < 4.00ns (max.) at 50MHz, CCARD=10pF
Clock Duty	45	55	%	

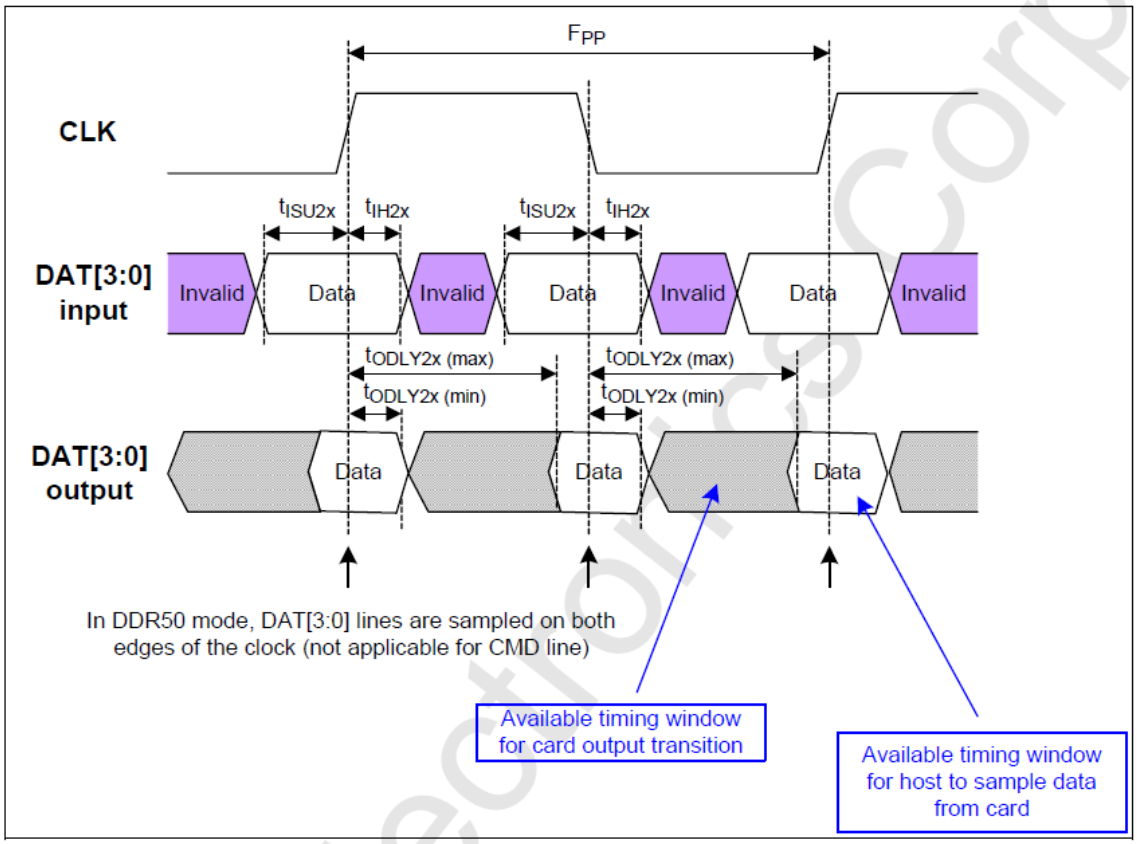

Timing Diagram DAT Inputs/Outputs Referenced to CLK in DDR50 Mode

© 2014 Apacer Technology, Inc.

4.3.4 Bus Timings – Parameters Values (DDR50 Mode)

Symbol	Parameters	Min	Max	Unit	Remark
Input CMD (referenced to CLK rising edge)					
t_{ISU}	Input set-up time	6	-	ns	C_{card}≤10 pF (1 card)
t_{IH}	Input hold time	0.8	-	ns	C_{card}≤10 pF (1 card)
Output CMD (referenced to CLK rising edge)					
t_{ODLY}	Output Delay time during Data Transfer Mode	-	13.7	ns	C_L≤30 pF (1 card)
T_{OH}	Output Hold time	1.5	-	ns	C_L≥15 pF (1 card)
Inputs DAT (referenced to CLK rising and falling edges)					
t_{ISU2x}	Input set-up time	3	-	ns	C_{card}≤10 pF (1 card)
t_{IH2x}	Input hold time	0.8	-	ns	C_{card}≤10 pF (1 card)
Outputs DAT (referenced to CLK rising and falling edges)					
t_{ODLY2x}	Output Delay time during Data Transfer Mode	-	7.0	ns	C_L≤25 pF (1 card)
T_{OH2x}	Output Hold time	1.5	-	ns	C_L≥15 pF (1 card)

© 2014 Apacer Technology, Inc.

5. Product Ordering Information

5.1 Product Code Designations

A P – MSD x x x X A – 1A TM

- TM: **Flash Type**
- 1A: **F/W**
- A: **CTL Solution**
- X: **Temperature:**
  - **C: Commercial Temperature**
  - **I: Extended Temperature**
- x x x: **Capacities:**
  - **04G: 4 GB**
  - **08G: 8 GB**
  - **16G: 16 GB**
  - **32G: 32 GB**
- MSD: **Model Name**
- AP: **Apacer Product Code**

© 2014 Apacer Technology, Inc.

5.2 Valid Combinations

5.2.1 Standard Temperature

Capacity	*AP/N*
4 GB	AP-MSD04GCA-1ATM
8 GB	AP-MSD08GCA-1ATM
16 GB	AP-MSD16GCA-1ATM
32 GB	AP-MSD32GCA-1ATM

5.2.2 Extended Temperature

Capacity	*AP/N*
4 GB	AP-MSD04GIA-1ATM
8 GB	AP-MSD08GIA-1ATM
16 GB	AP-MSD16GIA-1ATM
32 GB	AP-MSD32GIA-1ATM

Note: Please consult with Apacer sales representatives for availabilities.

© 2014 Apacer Technology, Inc.

Revision History

Revision	Description	Date
0.1	Preliminary	09/30/2014
1.0	Official release	10/03/2014
1.1	Revised Features. Modified SMART statement. Revised the Total Bytes of 16 GB capacity. Revised Micro SD Interface Timing (High Speed Mode) – tOH.	11/05/2014
1.2	Added 4 GB & 32 GB specifications.	12/22/2014

© 2014 Apacer Technology, Inc.

Global Presence

Taiwan (Headquarters)

Apacer Technology Inc.
1F., No.32, Zhongcheng Rd., Tucheng Dist.,
New Taipei City 236, Taiwan R.O.C.
Tel: 886-2-2267-8000
Fax: 886-2-2267-2261
amtsales@apacer.com

U.S.A.

Apacer Memory America, Inc.
386 Fairview Way, Suite102,
Milpitas, CA 95035
Tel: 1-408-518-8699
Fax: 1-408-935-9611
sa@apacerus.com

Japan

Apacer Technology Corp.
5F, Matsura Bldg., Shiba, Minato-Ku
Tokyo, 105-0014, Japan
Tel: 81-3-5419-2668
Fax: 81-3-5419-0018
jpservices@apacer.com

Europe

Apacer Technology B.V.
Science Park Eindhoven 5051 5692 EB Son,
The Netherlands
Tel: 31-40-267-0000
Fax: 31-40-267-0000#6199
sales@apacer.nl

China

Apacer Electronic (Shanghai) Co., Ltd
1301, No.251,Xiaomuqiao Road, Shanghai,
200032, China
Tel: 86-21-5529-0222
Fax: 86-21-5206-6939
sales@apacer.com.cn

India

Apacer Technologies Pvt Ltd,
535, 1st Floor, 8th cross, JP Nagar 3rd Phase,
Bangalore – 560078, India
Tel: 91-80-4152-9061
sales_india@apacer.com

© 2014 Apacer Technology, Inc.

Стандарт Электрон Связь

Мы молодая и активно развивающаяся компания в области поставок электронных компонентов. Мы поставляем электронные компоненты отечественного и импортного производства напрямую от производителей и с крупнейших складов мира.

Благодаря сотрудничеству с мировыми поставщиками мы осуществляем комплексные и плановые поставки широчайшего спектра электронных компонентов.

Собственная эффективная логистика и склад в обеспечивает надежную поставку продукции в точно указанные сроки по всей России.

Мы осуществляем техническую поддержку нашим клиентам и предпродажную проверку качества продукции. На все поставляемые продукты мы предоставляем гарантию .

Осуществляем поставки продукции под контролем ВП МО РФ на предприятия военно-промышленного комплекса России , а также работаем в рамках 275 ФЗ с открытием отдельных счетов в уполномоченном банке. Система менеджмента качества компании соответствует требованиям ГОСТ ISO 9001.

Минимальные сроки поставки, гибкие цены, неограниченный ассортимент и индивидуальный подход к клиентам являются основой для выстраивания долгосрочного и эффективного сотрудничества с предприятиями радиоэлектронной промышленности, предприятиями ВПК и научно-исследовательскими институтами России.

С нами вы становитесь еще успешнее!

Наши контакты:

Телефон: +7 812 627 14 35

Электронная почта: sales@st-electron.ru

Адрес: 198099, Санкт-Петербург,
Промышленная ул, дом № 19, литера Н,
помещение 100-Н Офис 331