Demo Kit Manual

AS3956

Standard Board

AS3956-WL_DK_ST

Content Guide

1 General Description 4
1.1 Kit Content 4
1.2 Compatibility 5
2 Hardware Description 5
2.1 Controller Board Description 5
2.1.1 Controller Board Layout and Schematics 5
2.1.2 Bill of Materials 8
2.2 Tag Description 9
2.2.1 Tag Layout 9
2.2.1.1 20x25 mm tag 9
2.2.1.2 22x38 mm tag 9
2.2.1.3 32x45 mm tag 9
3 Software Description 9
3.1 AS395x Evaluation Software 10
4 AS395x Evaluation Software User Guide 12
4.1 Type 2 Tag tab 12
4.2 Type 4 Tag tab 16
4.3 File Transfer tab 16
4.4 Memory Map tab 18
4.5 Advanced tab 19
5 Data protection 24
6 Configure and Use Example 25
6.1 AS3956 with AS3911 25
6.1.1 NFC T2T 25
6.1.2 NFC T4T 25
6.1.2.1 Powered from USB port 25
6.1.2.2 Powered from AS3956 (energy harvesting) 25
6.2 AS3956 with NFC Enabled Android Smartphone 25
6.2.1 NFC T2T 25
6.2.2 NFC T4T 25
6.2.2.1 Powered from USB port 25
6.2.2.2 Powered from AS3956 (energy harvesting) 25
7 Ordering & Contact Information 27
8 Copyrights & Disclaimer 28

9 Revision Information 29

1 General Description

This application note describes the AS3956 General Purpose Demo Kit and its usage. The purpose of the demonstrator is to show all the features and functionalities of the AS3956. The demonstration works in combination with a reader (AS3911 GP demonstrator) and/or NFC enabled smartphone. The main features of the demonstrator are:

- Demonstration of a Tag 4 Type (T4T) operation
- Demonstration of a Tag 2 Type (T2T) operation

The Evaluation Kit allows you to supply all components by the PC USB Port. No external supply or battery is needed. Except the USB cable (included), no wiring is needed. This allows a fast and convenient evaluation of the AS3956.

1.1 Kit Content

The AS3956 Demo Kit includes the following items:

- AS3956 tags (3 pcs.)
- Controller Board with USB interface
- USB Cable
- USB Data Stick

Figure 1: Demo kit content

1.2 Compatibility

This demo works with

- AS395x GP GUI version 1.0.11.0 or higher and FW 1.0.9 or higher

2 Hardware Description

The AS3956 demo kit is composed of 3 tags and a controller board. The tag consists of the AS3956, antenna and a connector. The tag (unpowered) works like a standard NFC-Forum T2T.

Connector provides all connections required for the microcontroller:

- VSS
- SPI/I2C
- /IRQ
- VPREG

2.1 Controller Board Description

The controller board mainly consists of the USB connector, PIC24FJ128GB202 microcontroller and an 8MHz crystal. The board is powered by USB or by RF field energy extracted by AS3956.

2.1.1 Controller Board Layout and Schematics

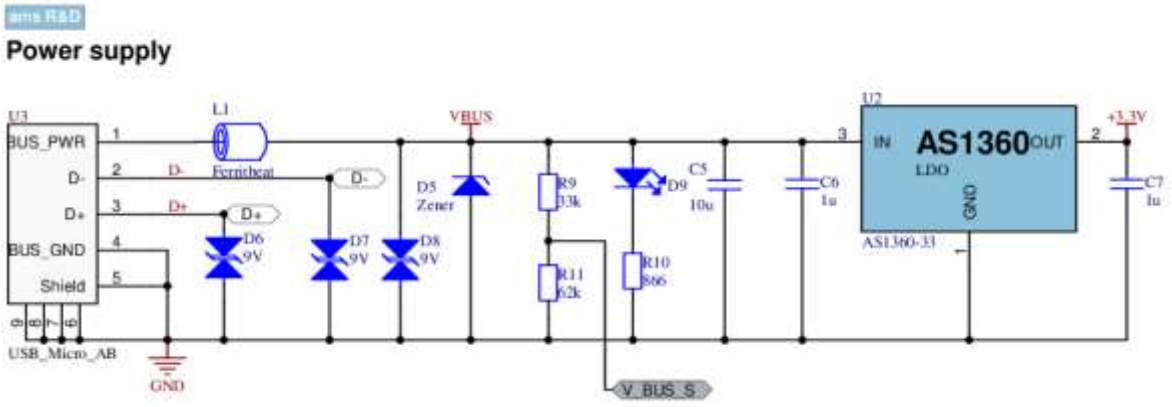

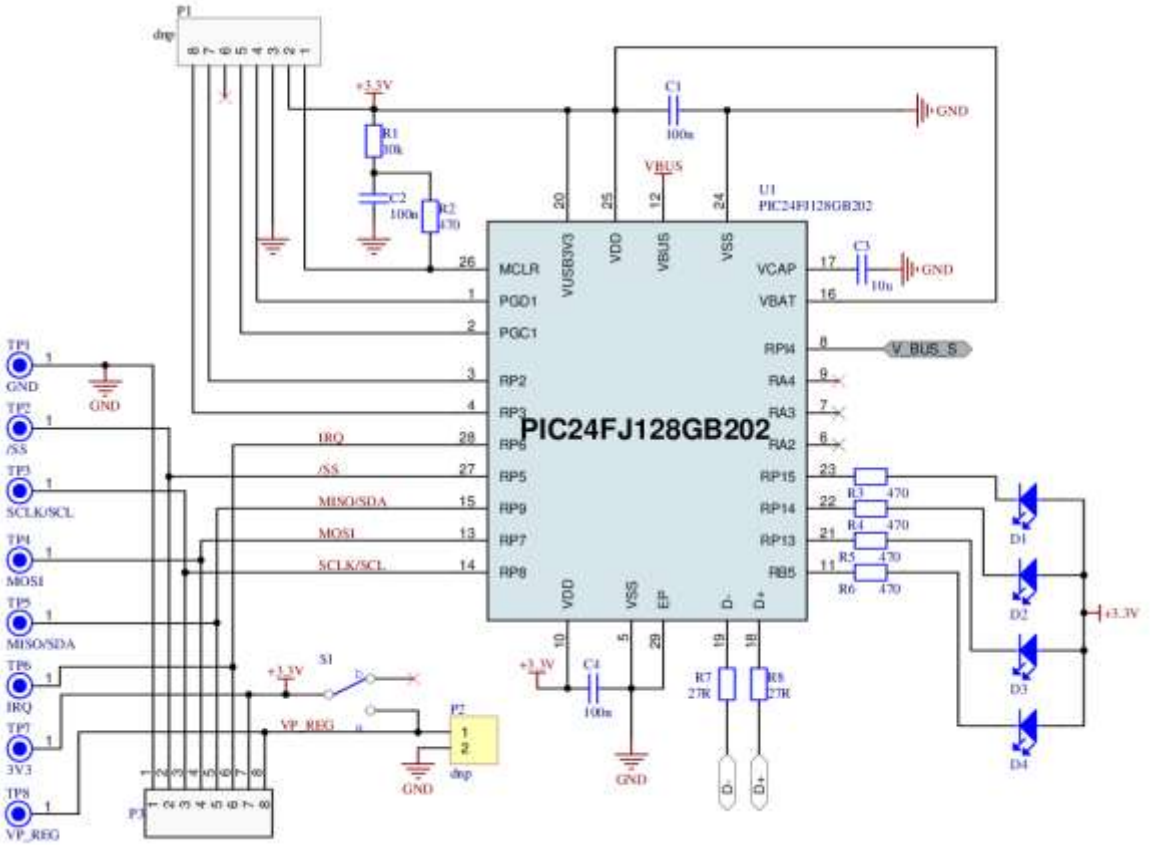

3D View | Top Layer | Bottom Layer

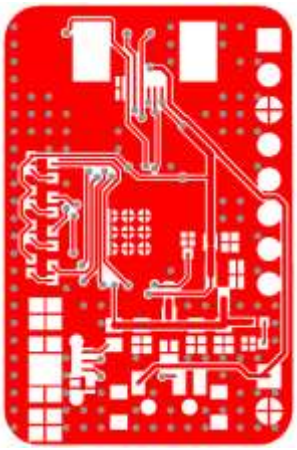

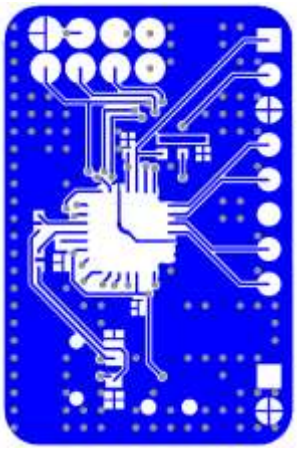

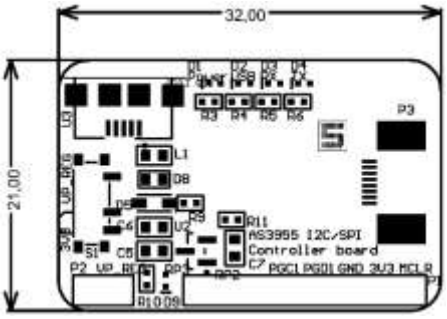
32,00
21,00
AS3955 I2C/SPI
Controller board

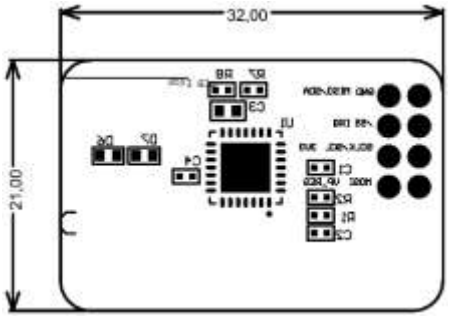
32,00
21,00

2.1.2 Bill of Materials

Bill of Materials

Company: ams AG
Application Engineer: dstr
Product Number: AS3956
ARS Project Name: AS3956 Demo Kit
Boardtype & Version: Controllerboard V1.0
Release Date: 28/8/2017
Revision: Rev 1.0.0

#	Designator	Comment	Manufacturer	Manufacturer Part Number	Quantity
	C1, C2, C4	100n	MULTICOMP	MC0402X104K160CT	3
	C3, C5	10u	TDK	C1608X5R1A106K080AC	2
	C6, C7	1u	KEMET	C0603C105K9RACTU	2
	D1, D2, D3, D4, D9	LED_LUMEX	KINGBRIGHT	KPHHS-1005QBC-D-V	5
	D5	Zener	ON SEMICONDUCTOR	MM3Z6V8T1G	1
	D6, D7, D8	9V	EPCOS	CDS3C09GTA.	3
	L1	Ferritbeat	MURATA	BLM18EG471SN1D	1
	Logo1				1
	P3	89212_Connector	TE CONNECTIVIY / AMP	1734592-8	1
	R1	10k	TE CONNECTIVITY	CRG0402J10K	1
	R10	866	MULTICOMP	MCMR04X8660FTL	1
	R11	62k	MULTICOMP	MCSR04X6202FTL	1
	R2, R3, R4, R5, R6	470	MULTICOMP	MCMR04X4700FTL	5
	R7, R8	27R	YAGEO (PHYCOMP)	RC0402FR-0727RL	2
	R9	33k	MULTICOMP	MCMR04X3302FTL	1
	S1	SW_DPST1_THMD	C & K COMPONENTS	PCM12SMTR	1
	U1	PIC24FJ128GB202	MICROCHIP	PIC24FJ128GB202-I/MM	1
	U2	AS1360-33	ams	AS1360-33-T	1
	U3	USB_Micro_AB	Hirose Electric Co Ltd	ZX62-AB-5PA(11)	1

34

2.2 Tag Description

Tag consists of AS3956 IC, Coil antenna and an FCC connector.

2.2.1 Tag Dimensions

2.2.1.1 20x25 mm tag

2.2.1.2 22x38 mm tag

2.2.1.3 32x45 mm tag

3 Software Description

The AS3956 IC natively behaves like a T2T with NDEF message. It can be used with a standard NFC enabled phone. The AS395x Evaluation Software package includes a general purpose AS395x Evaluation Software (Desktop GUI)

3.1 AS395x Evaluation Software

With the AS395x Evaluation Software users can:

- Change the AS3956 configuration – setup to operate as a T4T or T2T, enable energy harvesting, data protection, silent mode and other advanced features
- Manipulate the contents of the NDEF message, both for T2T and T4T
- Do data transfer between the Desktop GUI and the Android demo app. Currently data transfer is supported only in extended mode, tunneling mode will added in the future versions.

The AS395x Evaluation SW can be downloaded from the following destinations:

	Software	FTP site	User	Password
AS395x GUI	General purpose	TBD	TBD	TBD

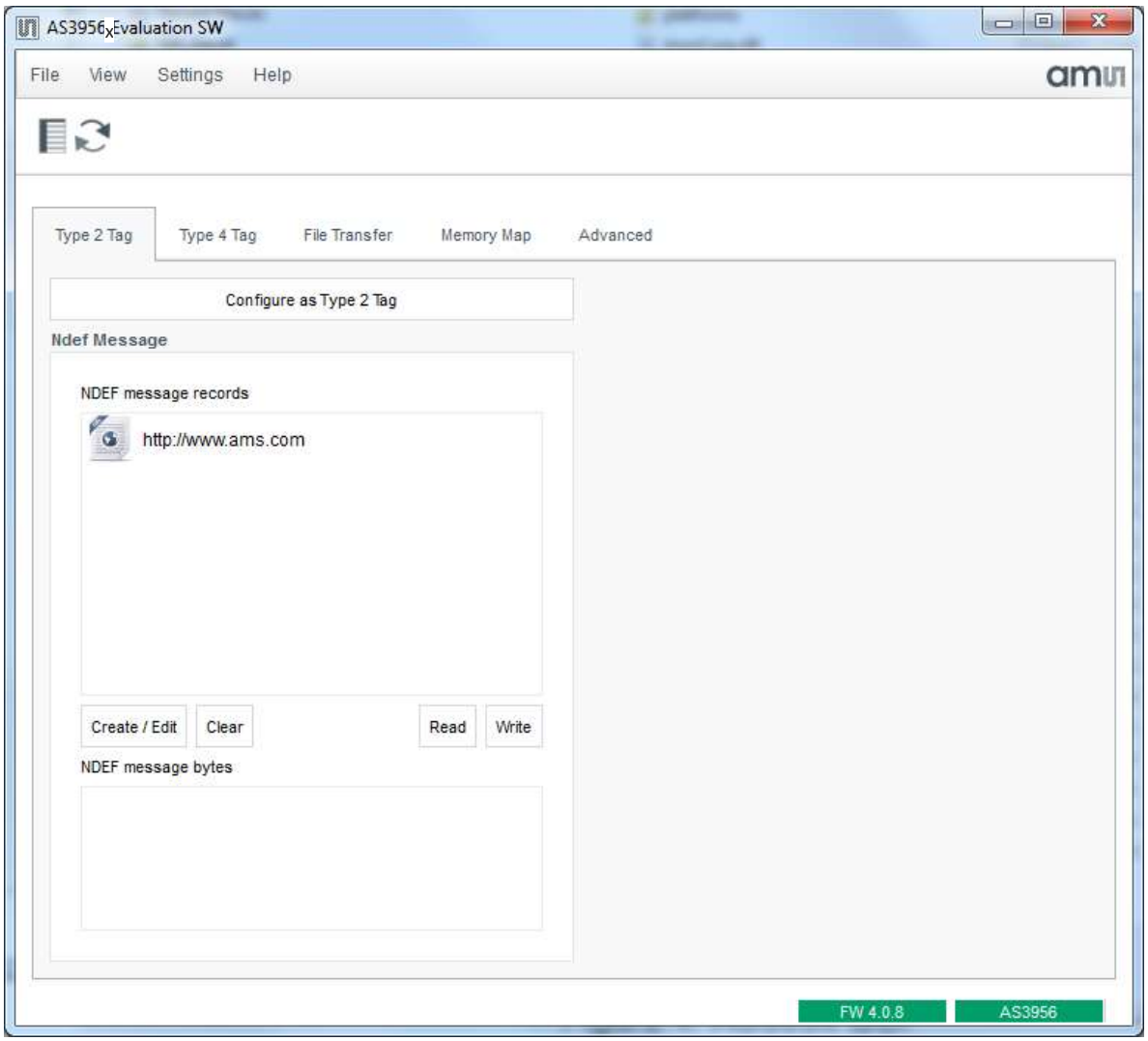

Figure 2: AS395x GUI

Figure 3: AS395x GUI Version

4 AS395x Evaluation Software User Guide

4.1 Type 2 Tag tab

From this tab the AS3956 can be configured to operate as an NFC Forum Type 2 Tag. Here the NDEF message can also be read or written.

To setup the AS3956 as a T2T click on *Configure as Type 2 Tag* button.

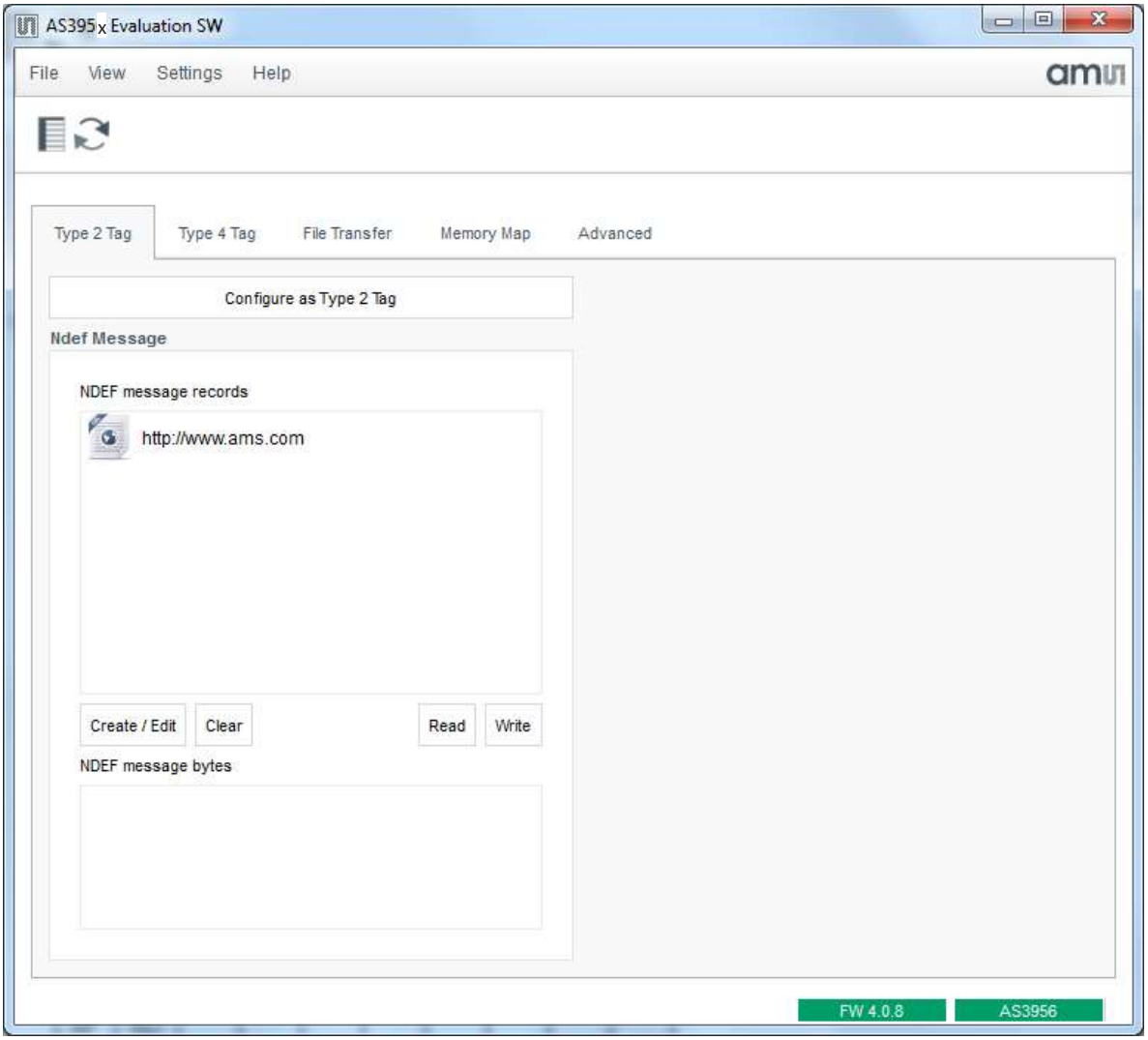

Figure 6: AS395x GUI - Type 2 Tag tab

To clear the NDEF message, click on the *Clear* button, pressing the *Write* button after that is not necessary.

To change or create the NDEF message, click on *Create/Edit* button to bring the NDEF message dialog.

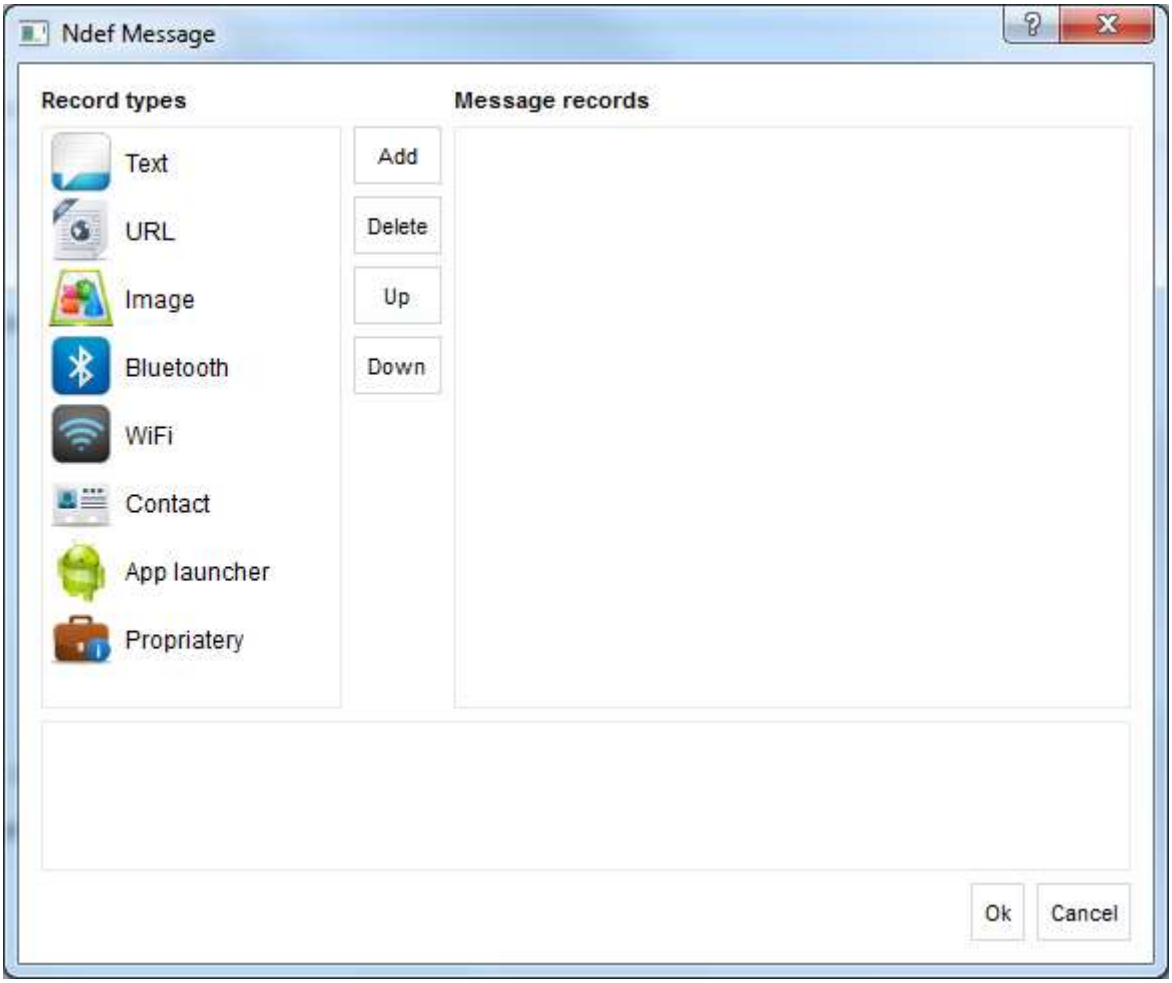

Figure 7: AS395x GUI – NDEF Message Dialog

Select the desired record type from the *Record types* list on left handside of the screen and then click *Add*. A record with the selected record type will be added to the *Message records* list. Now enter the URL text in the text box.

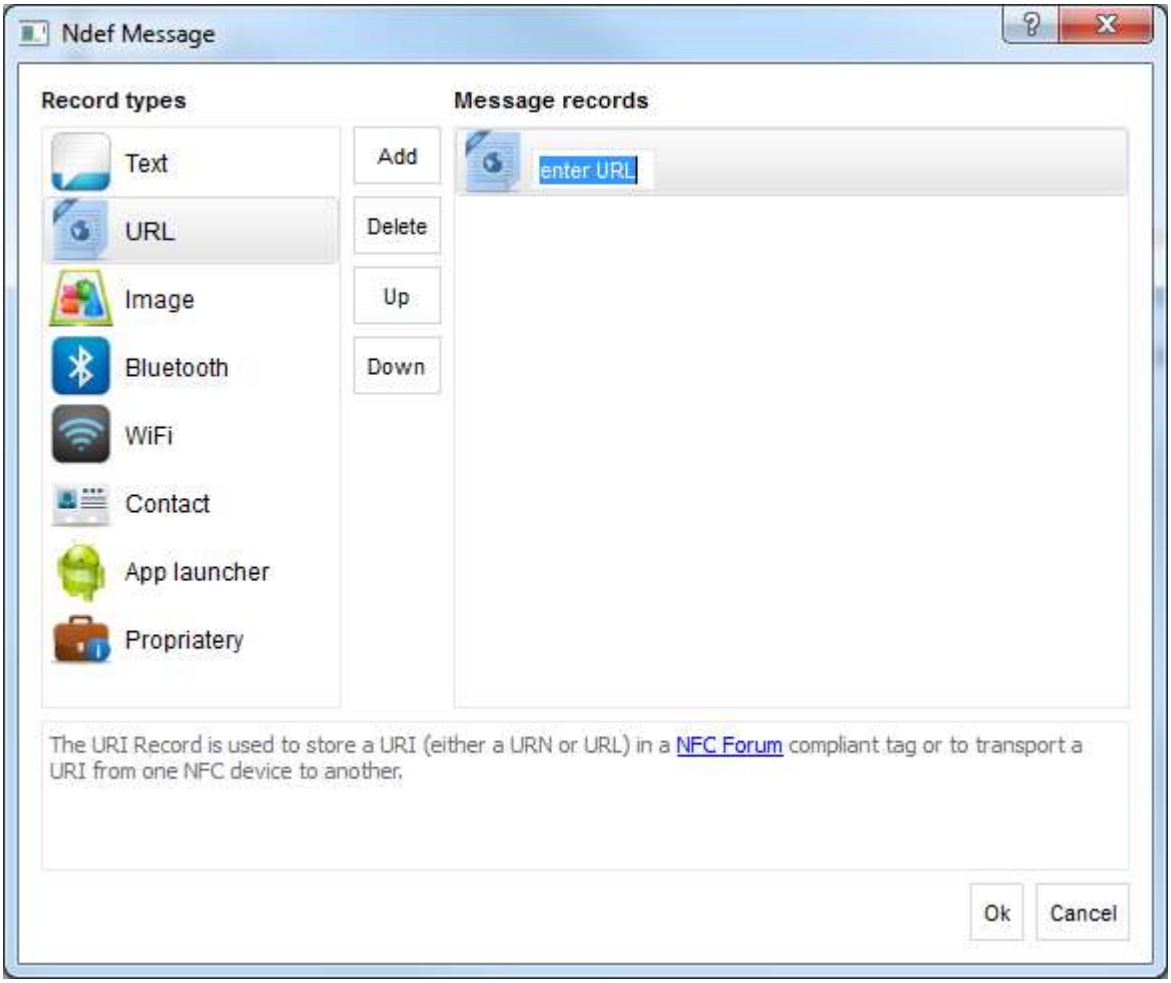

Figure 8: AS395x GUI – Create NDEF Message

When ready, press *Ok* to close the NDEF message dialog and go back to the *Type 2 Tag* tab and there press *Write*. A message box will pop up to inform if writing the NDEF message was successful.

Figure 9: AS395x GUI – NDEF Message Created

The message is written into the AS3956 EEPROM and the board can be disconnected from USB. Any reader/NFC enabled phone will be able to read out the NDEF message.

4.2 Type 4 Tag tab

From this tab the AS3956 can be configured to operate as an NFC Forum Type 4 Tag and as in T2T, the NDEF message can also be read or written.

To setup the AS3956 as a T4T click on *Configure as Type 4 Tag* button.

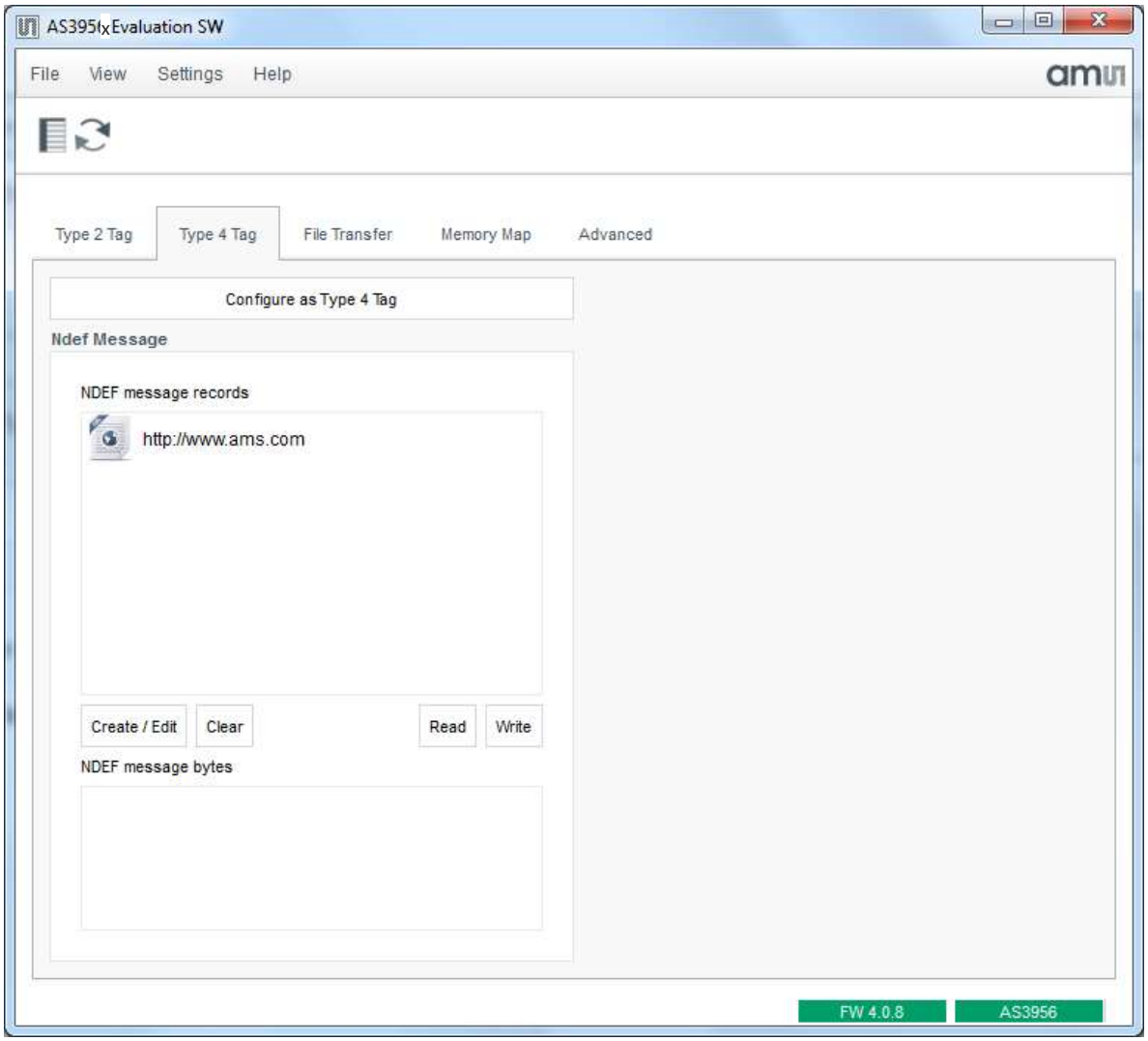

Figure 10: AS395x GUI – Type 4 Tag tab

Changing/creating the NDEF message follows the same procedure as in T2T NDEF message configuration. The difference is that in this case the NDEF message will go to the MCU's flash memory, not to the AS3956 EEPROM. MCU must be on for readers/NFC phones to read out the message, so either energy harvesting must be enabled or the MCU should be externally supplied (USB cable ex.). The GUI can be closed.

4.3 File Transfer tab

This tab is for demonstrating the data transfer application. There are several options for data transfer.

- Files can be received or sent from/to an NFC phone. Smartphone App is currently not available for AS3956. This feature will be added in the future.

4.4 Memory Map tab

In this tab the complete EEPROM memory can read or written.

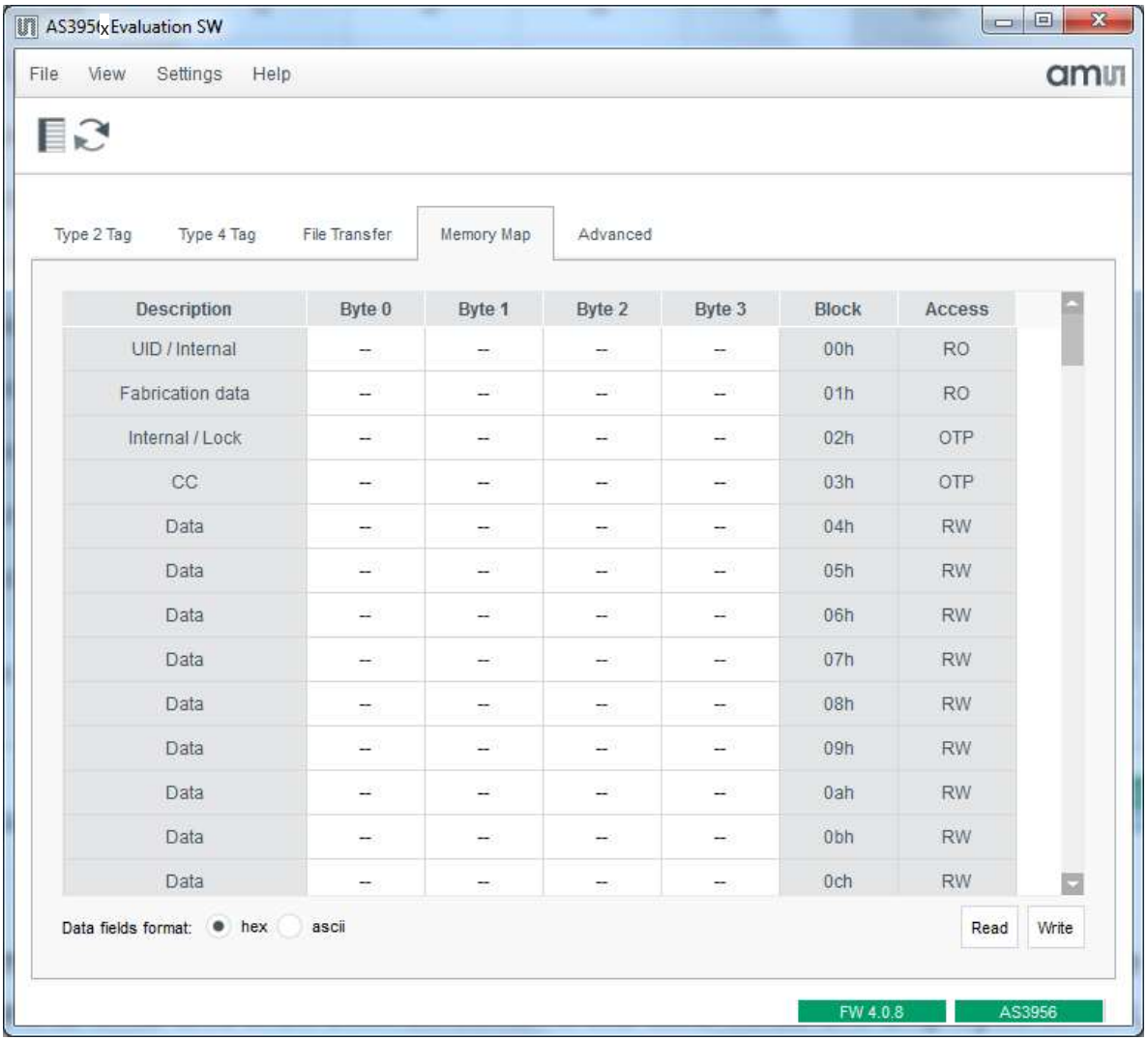

Figure 13: AS3956x GUI – Memory Map tab

To read the tag memory, press on *Read*. To change contents of the memory, change the bytes of the block you want to write and then click on *Write*. If the data fields are displayed in hex, enter the new data in hex. If data fields are displayed in ASCII, then data should be entered as text. The cells to be changed will be marked in red.

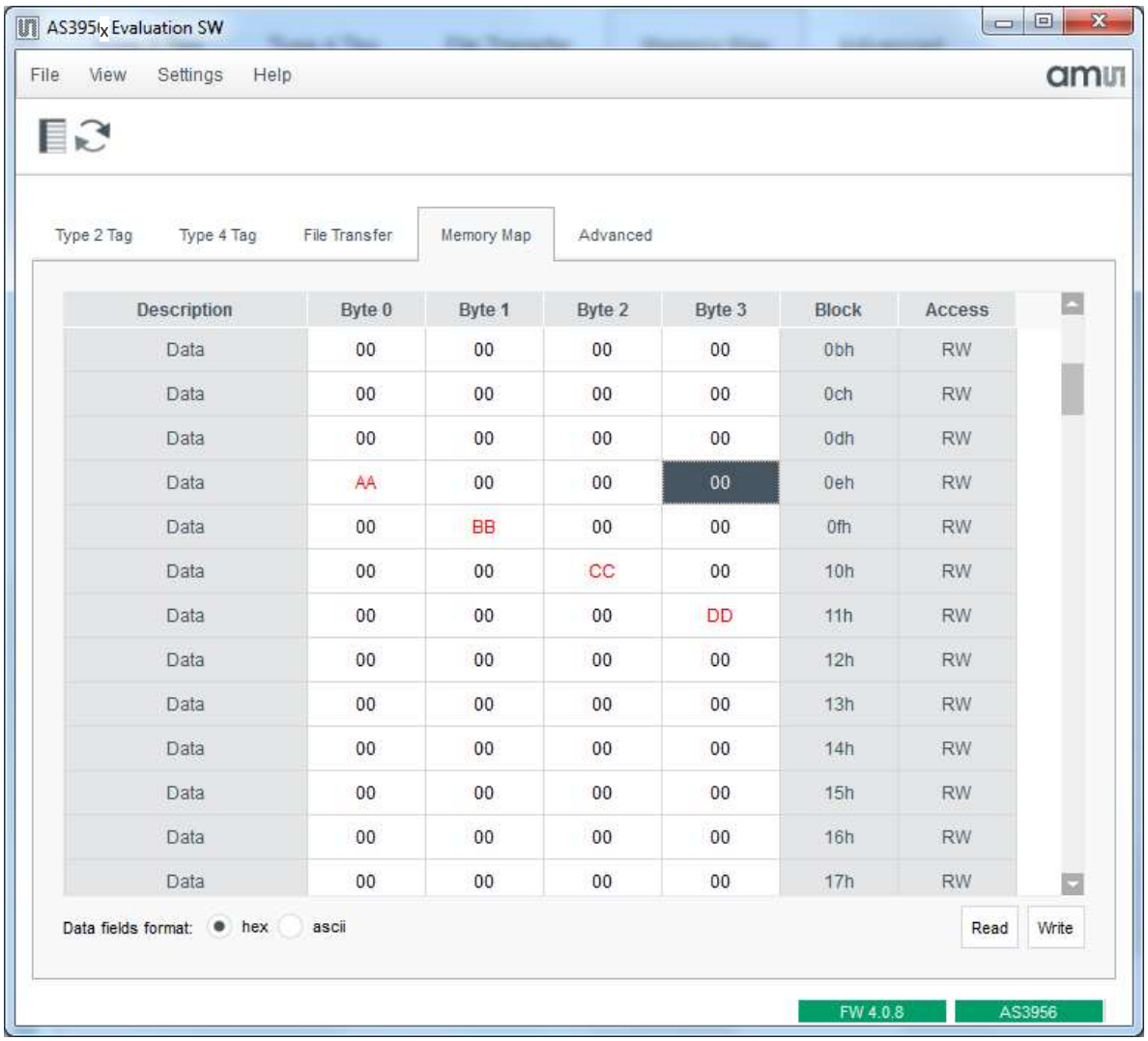

Figure 13: AS395x GUI – Memory Map tab, data enter

When the content of the tag memory was changed from the RF interface, reading again with the GUI will show the text in the cells in blue, indicating that the content in these cells changed since the last read.

4.5 Advanced tab

The *Advanced* tab has four sections:

- IC Configuration

  Part of the settings saved in the AS3956 EEPROM configuration words can be changed here. Refer to the datasheet for information on what each options means.

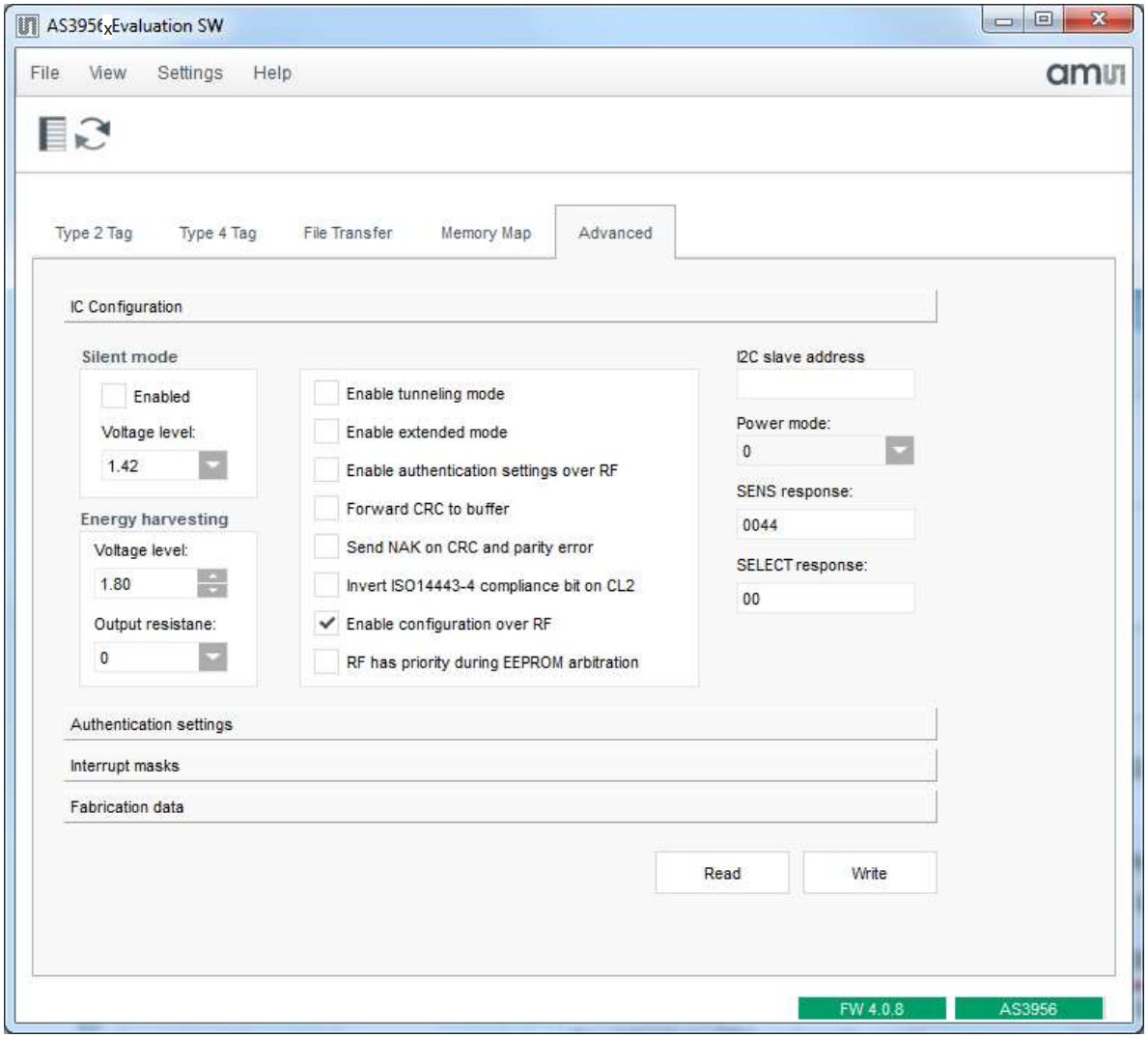

Figure 14: AS395x GUI – Advanced tab

- Authentication settings – for details on each option, refer to the datasheet.

  To enable password authentication:

  - Click on the *Authentication settings* section in the *Advanced* tab.
  - Enter the block number where protection should start in the *Start address* text box. Protected blocks will be all the blocks from the start address to the end of the memory address space. If the start address is beyond the valid addresses, data protection will be disabled.
  - Select which EEPROM operations (read and/or write) require authentication. If nothing is selected, data protection will be disabled.
  - Optionally change the authentication counter to a valid value (1-7).
  - Click *Write* to write the settings to the EEPROM.

  To disable password authentication:

  - Click on the *Authentication settings* section in the *Advanced* tab.

- In the *Start address* text box enter a value that is beyond the valid addresses, ex. FFh and/or uncheck the *EEPROM Read* and *EEPROM Write* check boxes.
- Click *Write* to write the new settings to the EEPROM.

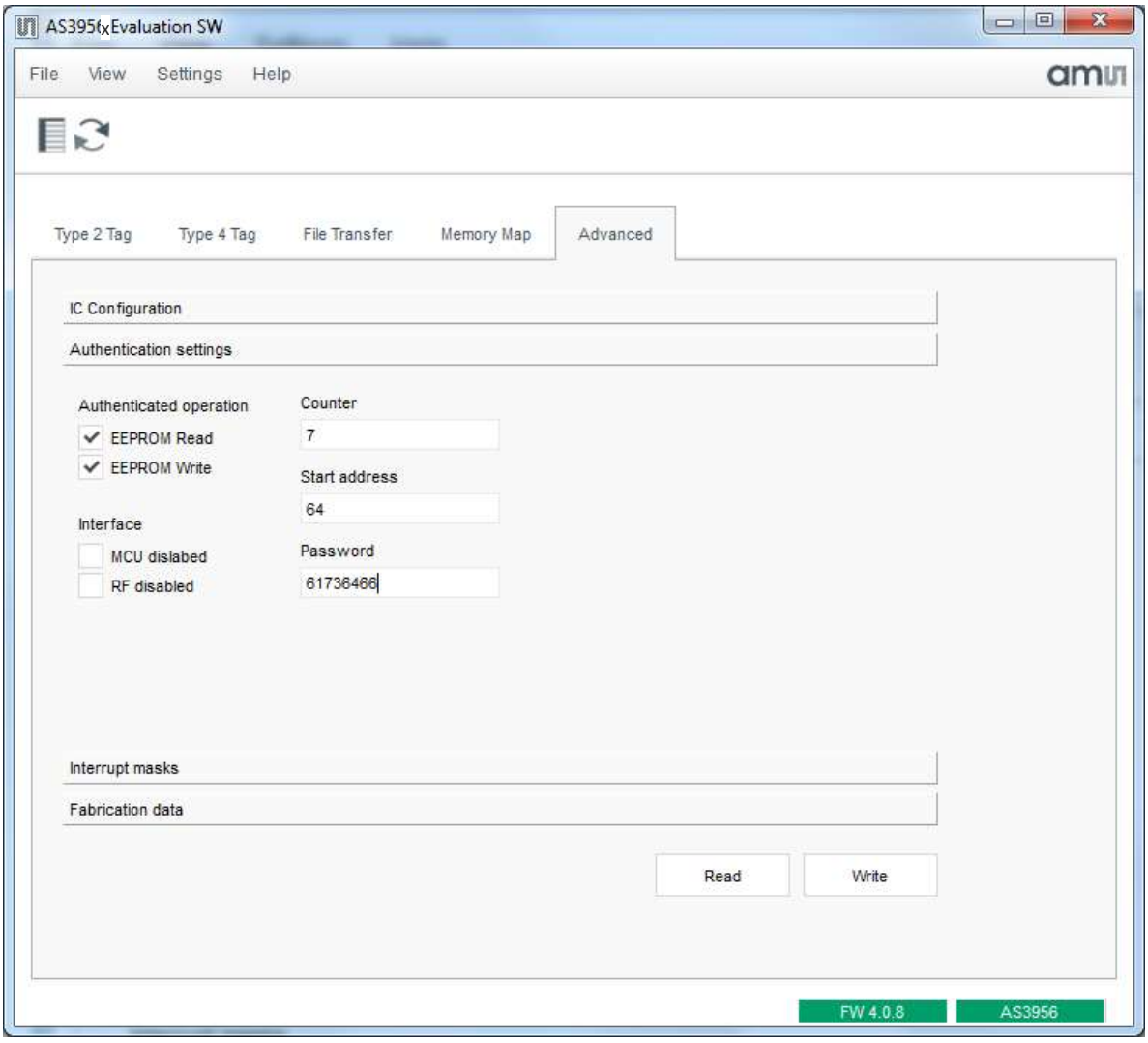

Figure 15: AS395x GUI – Advanced tab, Authentication Settings

- Interrupt masks – define which interrupt sources will trigger an IRQ. Checking a source will disable it. This part and the IC Configuration comprise the contents of the AS3956 configuration words.

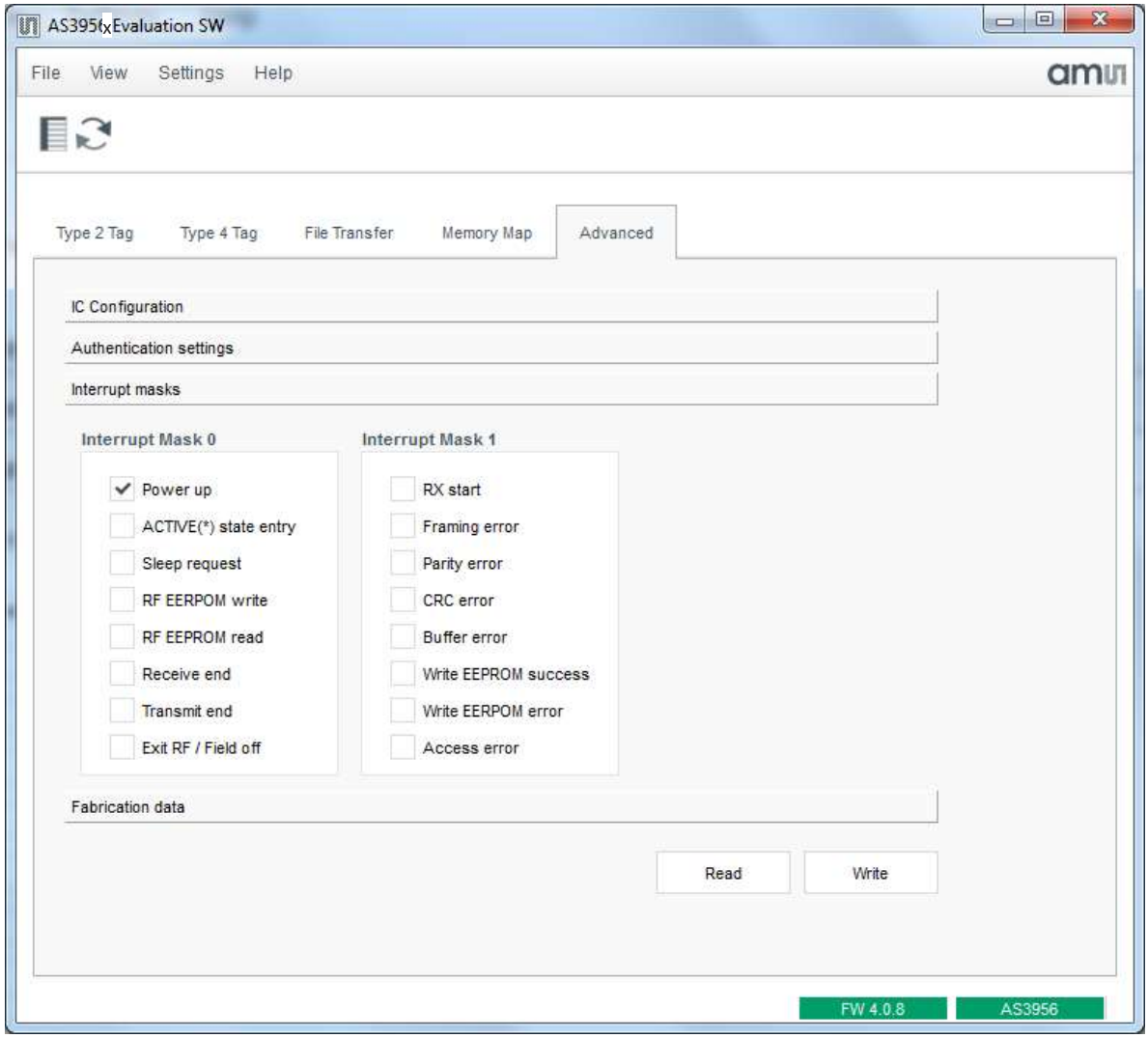

Figure 16: AS395x GUI – Advanced tab, Interrupt masks

- Fabrication data – the read only configuration data of the AS3956 are written at production time

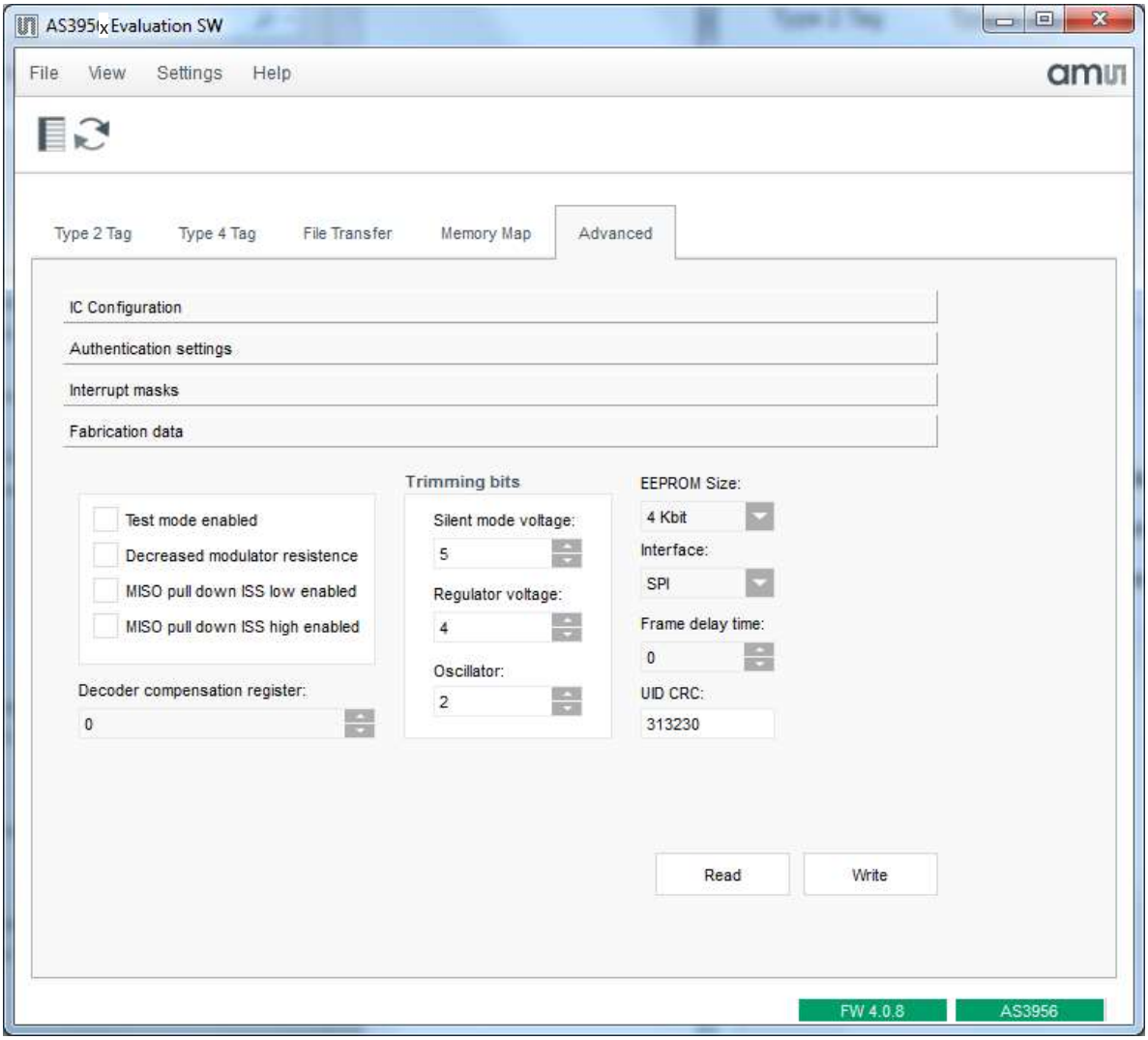

Figure 17: AS395x GUI – Advanced tab, Fabrication data

5 Data protection

Data protection can be enabled from the GUI when authentication settings over RF is set to be allowed in the AS3956 IC's configuration settings.

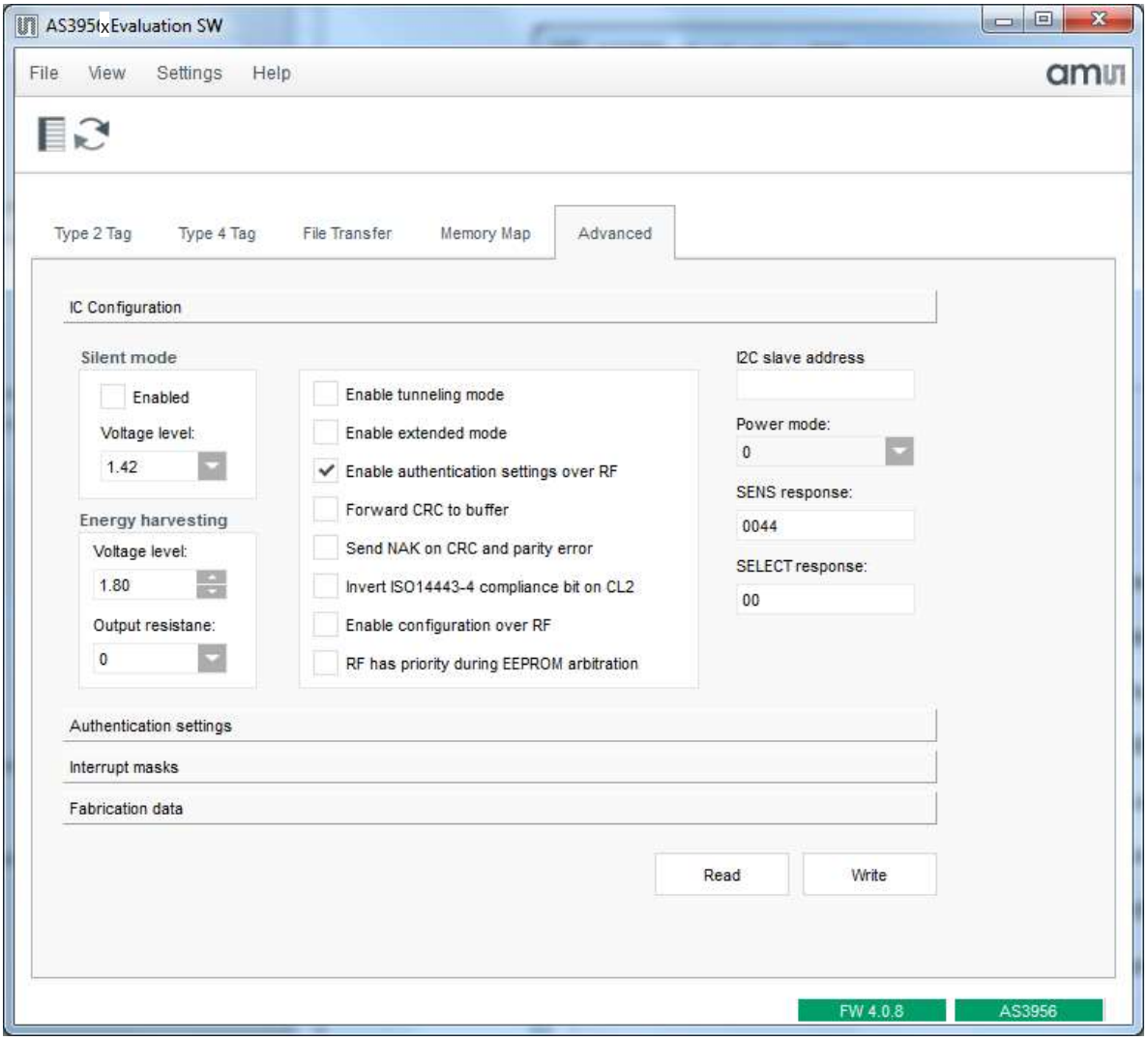

Figure 35: AS395x GUI – Enable auth settings from RF

How to enable/disable from the GUI refer to the AS395x Evaluation Software User Guide section of this document.

6 Configure and Use Example

6.1 AS3956 with NFC Enabled Android Smartphone[1]

6.1.1 NFC T2T

- Connect the Controller board to the computer with USB cable and start the *AS395x Evaluation Software*.
- Click on the *Type 2 Tag* tab.
- Click on *Configure as Type 2 Tag*. The AS3956 is now configured as T2T.
- Disconnect the USB cable.
- Place the tag on the back of the smartphone. Smartphone will detect the tag and take appropriate action.[2]

6.1.2 NFC T4T

6.1.2.1 Powered from USB port

- Connect the AS3956 Controller board to the computer with USB cable and start the *AS3956 Evaluation Software*.
- Click on the *Type 4 Tag* tab.
- Click on *Configure as Type 4 Tag*. The AS3956 is now configured as T4T.
- Place the tag on the back of the smartphone. Smartphone will detect the tag and take appropriate action. [3]

6.1.2.2 Powered from AS3956 (energy harvesting)

Connect the Controller board to the computer with USB cable and start the *AS395x Evaluation Software*.

- Click on the *Type 4 Tag* tab.
- Click on *Configure as Type 4 Tag*. The AS3956 is now configured as T4T.
- Click on the *Advanced* tab.
- Click on the *IC Configuration*.
- Click the *Read* button. To read the current settings of AS3956.
- In the *Energy harvesting* box click up arrow until the *Voltage level>* is set to *3,30*. To set the regulated output voltage value.
- With the drop-down menu set the *Output resistance:* to *25*. To set the output resistance of voltage regulator.
- Click *Write*. To write the settings to AS3956.
- Disconnect the USB cable from the controller board and move the switch on controller board to position *VP_REG.*

---

[1] For this application note Samsung Galaxy S4 was used. Android version 5.0.2
[2] NFC must be enabled
[3] NFC must be enabled

- Place the tag on the back of the smartphone. Smartphone will detect the tag and take appropriate action. [4]

[4] NFC must be enabled

7 Ordering & Contact Information

Ordering Code	Description
AS3956-WL_DK_ST	AS3956 Demo Kit Standard Board

Buy our products or get free samples online at:
www.ams.com/ICdirect

Technical Support is available at:
www.ams.com/Technical-Support

Provide feedback about this document at:
www.ams.com/Document-Feedback

For further information and requests, e-mail us at:
ams_sales@ams.com

For sales offices, distributors and representatives, please visit:
www.ams.com/contact

Headquarters
ams AG
Tobelbaderstrasse 30
8141 Unterpremstaetten
Austria, Europe

Tel: +43 (0) 3136 500 0
Website: www.ams.com

8 Copyrights & Disclaimer

Copyright ams AG, Tobelbader Strasse 30, 8141 Unterpremstaetten, Austria-Europe. Trademarks Registered. All rights reserved. The material herein may not be reproduced, adapted, merged, translated, stored, or used without the prior written consent of the copyright owner.

Demo Kits, Evaluation Kits and Reference Designs are provided to recipient on an “as is” basis for demonstration and evaluation purposes only and are not considered to be finished end-products intended and fit for general consumer use, commercial applications and applications with special requirements such as but not limited to medical equipment or automotive applications. Demo Kits, Evaluation Kits and Reference Designs have not been tested for compliance with electromagnetic compatibility (EMC) standards and directives, unless otherwise specified. Demo Kits, Evaluation Kits and Reference Designs shall be used by qualified personnel only.

ams AG reserves the right to change functionality and price of Demo Kits, Evaluation Kits and Reference Designs at any time and without notice.

Any express or implied warranties, including, but not limited to the implied warranties of merchantability and fitness for a particular purpose are disclaimed. Any claims and demands and any direct, indirect, incidental, special, exemplary or consequential damages arising from the inadequacy of the provided Demo Kits, Evaluation Kits and Reference Designs or incurred losses of any kind (e.g. loss of use, data or profits or business interruption however caused) as a consequence of their use are excluded.

ams AG shall not be liable to recipient or any third party for any damages, including but not limited to personal injury, property damage, loss of profits, loss of use, interruption of business or indirect, special, incidental or consequential damages, of any kind, in connection with or arising out of the furnishing, performance or use of the technical data herein. No obligation or liability to recipient or any third party shall arise or flow out of ams AG rendering of technical or other services.

9 Revision Information

Changes from previous version to current revision 1-2 (2017-Oct-30)	Page
Initial version 1-00	

Note: Page numbers for the previous version may differ from page numbers in the current revision.

Стандарт Электрон Связь

Мы молодая и активно развивающаяся компания в области поставок электронных компонентов. Мы поставляем электронные компоненты отечественного и импортного производства напрямую от производителей и с крупнейших складов мира.

Благодаря сотрудничеству с мировыми поставщиками мы осуществляем комплексные и плановые поставки широчайшего спектра электронных компонентов.

Собственная эффективная логистика и склад в обеспечивает надежную поставку продукции в точно указанные сроки по всей России.

Мы осуществляем техническую поддержку нашим клиентам и предпродажную проверку качества продукции. На все поставляемые продукты мы предоставляем гарантию .

Осуществляем поставки продукции под контролем ВП МО РФ на предприятия военно-промышленного комплекса России , а также работаем в рамках 275 ФЗ с открытием отдельных счетов в уполномоченном банке. Система менеджмента качества компании соответствует требованиям ГОСТ ISO 9001.

Минимальные сроки поставки, гибкие цены, неограниченный ассортимент и индивидуальный подход к клиентам являются основой для выстраивания долгосрочного и эффективного сотрудничества с предприятиями радиоэлектронной промышленности, предприятиями ВПК и научно-исследовательскими институтами России.

С нами вы становитесь еще успешнее!

Наши контакты:

Телефон: +7 812 627 14 35

Электронная почта: sales@st-electron.ru

Адрес: 198099, Санкт-Петербург,
Промышленная ул, дом № 19, литера Н,
помещение 100-Н Офис 331