# SMD Multilayer Chip Varistor

## AMCV-1206H

**RoHS Compliant**

**3.2 x 1.6 x 1.05mm**

## FEATURES:

- SMD type, small size suitable for high density mounting
- Excellent clamping ratio and strong capability of voltage surge suppression
- Excellent solderability (Ni, Sn plating)

## APPLICATIONS:

- Transient voltage protection and voltage surge suppression for LED lighting
- Suitable for LCD-TV, STB, Switch, Router, PLC, Security System, smart meters, mobile phones
- Suppressing Induced / switching over-voltage caused by lightning and power
- Protecting DC-DC Module, I/O ports, IC driver

## STANDARD SPECIFICATIONS:

**Operating Temperature:** -55˚C ~ +125˚C

**Storage Temperature:** -10˚C ~ +40˚C and RH 70% (Max.)

| Part Number | Max. Working Voltage | | Varistor Voltage | Max. Clamping Voltage | | Rated Single Pulse Transient | | Typical Capacitance |
|---|---|---|---|---|---|---|---|---|
| Test Condition | <20µA | | @1mA DC | 8/20µs | ESD | Energy 10/1000µs | Peak Current 8/20µs | @1$V_{rms}$, 1kHz |
| | DC | AC RMS | | | | | | |
| Units | Volts | Volts | Volts | Volts | Amps | Joules | Amps | pF |
| Symbol | $V_{WDC}$ | $V_{WAC}$ | $V_B$ | $V_C$ | $I_C$ | $E_T$ | $I_P$ | $C_P$ |
| AMCV-1206H-5R5 | 5.5 | 4.0 | 12.0 [10.0-14.0] | 18 | 5.0 | 0.7 | 300 | 2400 |
| AMCV-1206H-090 | 9 | 6.4 | 14.0 [12.0-16.0] | 20 | 5.0 | 0.7 | 300 | 2000 |
| AMCV-1206H-120 | 12 | 8.5 | 16.0 [13.0-19.0] | 25 | 5.0 | 0.7 | 300 | 1600 |
| AMCV-1206H-140 | 14 | 10.0 | 19.0 [16.0-22.0] | 30 | 5.0 | 0.7 | 300 | 1500 |
| AMCV-1206H-180 | 18 | 12.7 | 25.0 [22.0-28.0] | 40 | 5.0 | 0.7 | 300 | 1300 |
| AMCV-1206H-220 | 22 | 15.6 | 30.0 [26.0-34.0] | 45 | 5.0 | 0.7 | 300 | 1100 |
| AMCV-1206H-260 | 26 | 18.4 | 35.0 [31.0-38.0] | 58 | 5.0 | 0.7 | 250 | 900 |
| AMCV-1206H-300 | 30 | 21.3 | 42.0 [37.0-46.0] | 65 | 5.0 | 0.7 | 250 | 800 |
| AMCV-1206H-380 | 38 | 30.0 | 50.0 [46.0-54.0] | 75 | 5.0 | 1.0 | 250 | 500 |
| AMCV-1206H-480 | 48 | 34.1 | 60.0 [54.0-67.0] | 100 | 5.0 | 1.0 | 250 | 300 |
| AMCV-1206H-560 | 56 | 40.0 | 68.0 [61.0-75.0] | 120 | 5.0 | 1.0 | 250 | 250 |
| AMCV-1206H-600 | 60 | 46.0 | 76.0 [69.0-83.0] | 130 | 5.0 | 1.0 | 250 | 200 |
| AMCV-1206H-650 | 65 | 50.0 | 82.0 [73.0-91.0] | 140 | 5.0 | 1.2 | 250 | 160 |
| AMCV-1206H-750 | 75 | 55.0 | 94.0 [85.0-103.0] | 160 | 5.0 | 1.2 | 250 | 140 |
| AMCV-1206H-850 | 85 | 60.0 | 100.0 [90.0-110.0] | 170 | 5.0 | 1.2 | 250 | 120 |
| AMCV-1206H-101 | 100 | 75.0 | 120.0 [108.0-132.0] | 200 | 5.0 | 1.2 | 250 | 80 |

Unless otherwise specified, the standard atmospheric conditions for measurement/test as:

a. Ambient Temperature: 20±15°C

b. Relative Humidity: 65±20%

c. Air Pressure: 86 kPa to 106 kPa

| Items | Test Methods and Remarks |
|---|---|
| Varistor Voltage at 1mA DC ($V_B$) | Measuring current: 1mA DC<br>Duration: 0.2 to 2 sec |
| Capacitance (C) | Measure source: 1.0 $V_{RMS}$<br>Test frequency: 1kHz. |
| Clamping Voltage ($V_C$) | Measuring source: 8/20us waveform |



30332 Esperanza, Rancho Santa Margarita, California 92688
tel 949-546-8000 | fax 949-546-8001 | www.abracon.com

# SMD Multilayer Chip Varistor

## AMCV-1206H

**RoHS Compliant**

**3.2 x 1.6 x 1.05mm**

## OPTIONS AND PART IDENTIFICATION:

AMCV-1206H-[ ]-[ ]

| Voltage Code |
|---|
| Please refer to the table above |

| Packaging |
|---|
| T: Tape and Reel (3kpcs / reel) |

## V/I CHARACTERISTICS

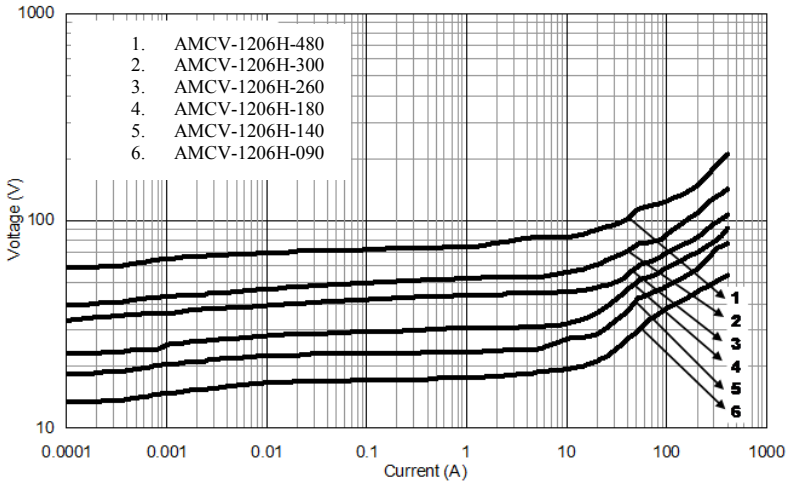


## OUTLINE DIMENSION:

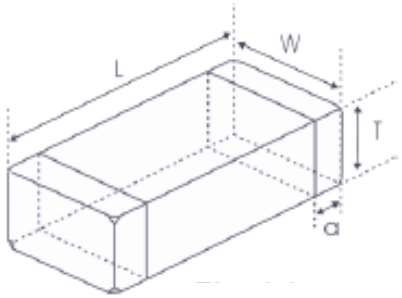


| L | W | T | a |
|---|---|---|---|
| 3.2±0.2 | 1.6±0.2 | 1.05 Max. | 0.2~0.8 |

**Recommended Land Pattern**

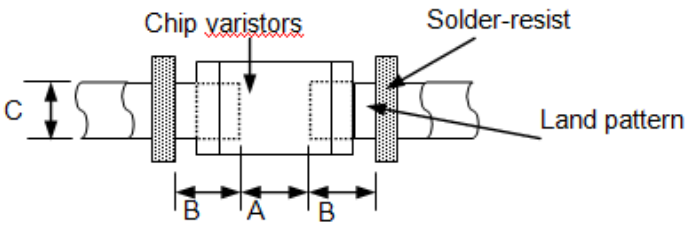


| A | B | C |
|---|---|---|
| 1.8~2.5 | 1.0~1.5 | 1.2~2.0 |

**Dimension: mm**



30332 Esperanza, Rancho Santa Margarita, California 92688
tel 949-546-8000 | fax 949-546-8001 | www.abracon.com

# SMD Multilayer Chip Varistor

## AMCV-1206H

**RoHS**
**Compliant**

**3.2 x 1.6 x 1.05mm**

### Materials

Side View

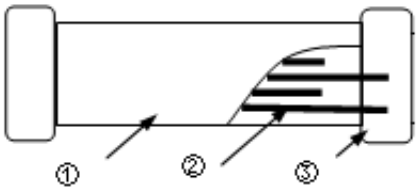


Top View

| | Part Name | Material |
|---|---|---|
| 1 | **Base Material** | **ZnO** |
| 2 | **Internal Conductor** | **Ag-Pd** |
| 3 | **Terminal Electrode** | **Ag (Inner layer)**<br>**Ni-Sn (Outer layer)** |

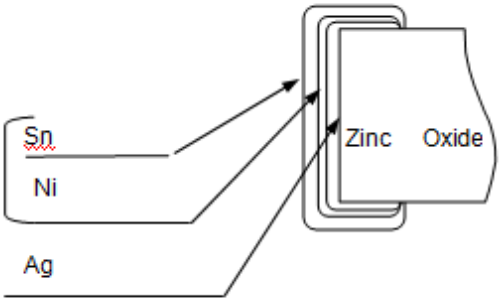


## REFLOW PROFILE:

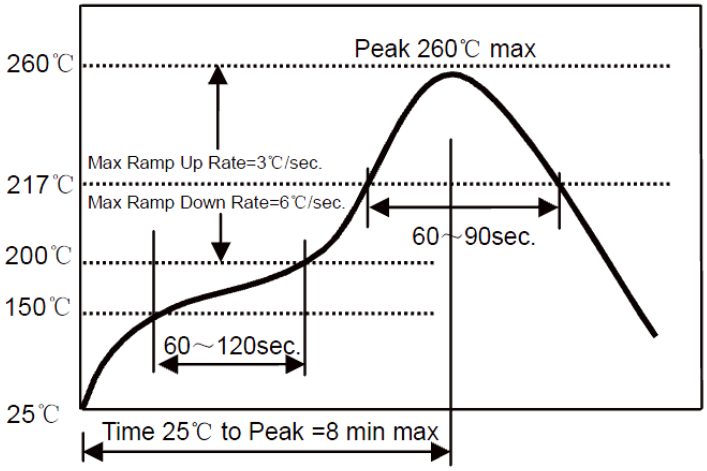


| | |
|---|---|
| **Preheat Condition** | 150 to 200 ˚C; 60 to 120 sec. |
| **Allowed time above 217 ˚C** | 60 to 90 sec. |
| **Max temperature** | 260 ˚C |
| **Max time at max temperature** | 10 sec. |
| **Solder paste** | Sn/3.0Ag/0.5Cu |
| **Allowed Reflow time** | 2x max. |



30332 Esperanza, Rancho Santa Margarita, California 92688
tel 949-546-8000 | fax 949-546-8001 | www.abracon.com

# SMD Multilayer Chip Varistor

AMCV-1206H

RoHS Compliant

3.2 x 1.6 x 1.05mm

## TAPE & REEL:

**T: 3,000pcs / reel**

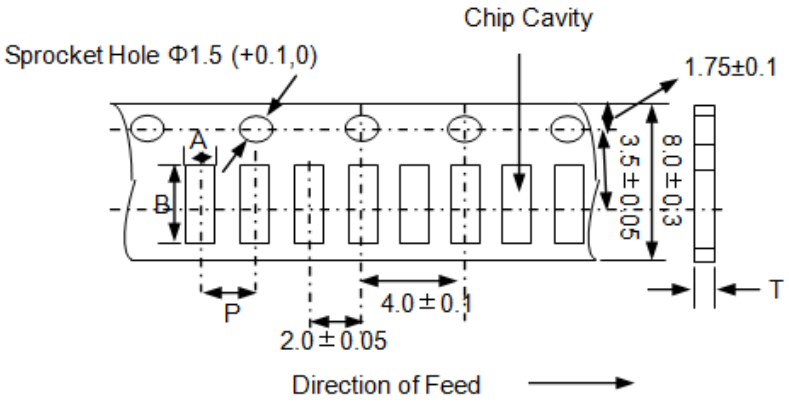


| A | B | P | T (max) |
|---|---|---|---|
| 1.90 | 3.50 | 4.0 | 1.10 |

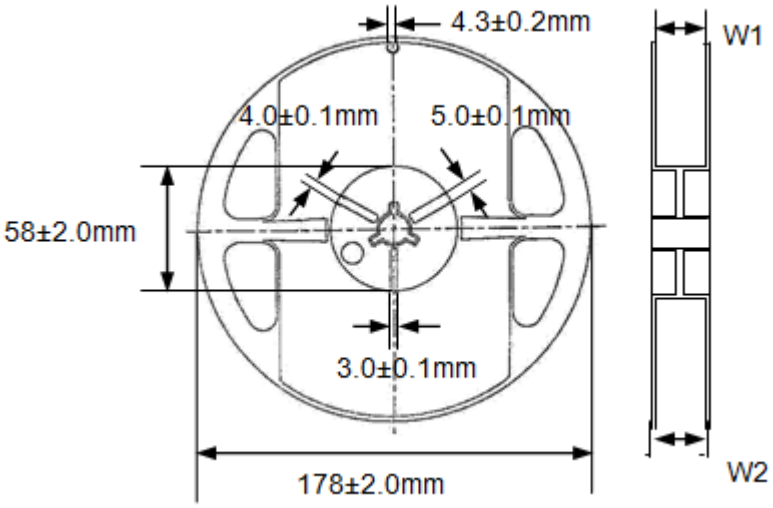


| W1 | W2 |
|---|---|
| 10.0±0.5 | 12.5±0.5 |

### Storage Conditions

a. The solderability of the external electrode may be deteriorated if packages are stored where they are exposed to high humidity Package must be stored at 40°Cor less and 70% RH or less.

b. The solderability of the external electrode may be deteriorated if packages are stored where they are exposed to dust of harmful gas (e.g. HCI, sulfurous gas of $H_2S$).

c. Packaging material may be deformed if package are stored where they are exposed to heat of direct sunlight.

d. Solderability shall be guaranteed for 6 months from the date of delivery on condition that they are stored at the environment specified in **1.3**. The parts that are stored more than 6 months shall be checked solderability before use.

**Dimension: mm**

**ATTENTION:** Abracon Corporation's products are COTS – Commercial-Off-The-Shelf products; suitable for Commercial, Industrial and, where designated, Automotive Applications. Abracon's products are not specifically designed for Military, Aviation, Aerospace, Life-dependant Medical applications or any application requiring high reliability where component failure could result in loss of life and/or property. For applications requiring high reliability and/or presenting an extreme operating environment, written consent and authorization from Abracon Corporation is required. Please contact Abracon Corporation for more information.



30332 Esperanza, Rancho Santa Margarita, California 92688
tel 949-546-8000 | fax 949-546-8001 | www.abracon.com

Мы молодая и активно развивающаяся компания в области поставок электронных компонентов. Мы поставляем электронные компоненты отечественного и импортного производства напрямую от производителей и с крупнейших складов мира.

Благодаря сотрудничеству с мировыми поставщиками мы осуществляем комплексные и плановые поставки широчайшего спектра электронных компонентов.

Собственная эффективная логистика и склад в обеспечивает надежную поставку продукции в точно указанные сроки по всей России.

Мы осуществляем техническую поддержку нашим клиентам и предпродажную проверку качества продукции. На все поставляемые продукты мы предоставляем гарантию .

Осуществляем поставки продукции под контролем ВП МО РФ на предприятия военно-промышленного комплекса России , а также работаем в рамках 275 ФЗ с открытием отдельных счетов в уполномоченном банке. Система менеджмента качества компании соответствует требованиям ГОСТ ISO 9001.

Минимальные сроки поставки, гибкие цены, неограниченный ассортимент и индивидуальный подход к клиентам являются основой для выстраивания долгосрочного и эффективного сотрудничества с предприятиями радиоэлектронной промышленности, предприятиями ВПК и научно-исследовательскими институтами России.

С нами вы становитесь еще успешнее!

**Наши контакты:**

**Телефон:** +7 812 627 14 35

**Электронная почта:** sales@st-electron.ru

**Адрес:** 198099, Санкт-Петербург, Промышленная ул, дом № 19, литера Н, помещение 100-Н Офис 331