19-2818; Rev 3; 6/11

EVALUATION KIT AVAILABLE

Multirate Laser Driver with Extinction Ratio Control

MAX3737

General Description

The MAX3737 is a 3.3V laser driver designed for multirate transceiver modules with data rates from 155Mbps to 2.7Gbps. Lasers can be DC-coupled to the MAX3737 for reduced component count and ease of multirate operation.

Laser extinction ratio control (ERC) combines the features of automatic power control (APC), modulation compensation, and built-in thermal compensation. The APC loop maintains constant average optical power. Modulation compensation increases the modulation current in proportion to the bias current. These control loops combined with thermal compensation maintain a constant optical extinction ratio over temperature and lifetime.

The MAX3737 accepts differential data input signals. The wide 5mA to 60mA (up to 85mA AC-coupled) modulation current range and up to 100mA bias current range makes the MAX3737 ideal for driving FP/DFB lasers in fiber-optic modules. External resistors set the required laser current levels. The MAX3737 provides transmit disable control (TX_DISABLE), single-point fault tolerance, bias-current monitoring, modulation-current monitoring, and photocurrent monitoring. The device also offers a latched failure output (TX_FAULT) to indicate faults, such as when the APC loop is no longer able to maintain the average optical power at the required level. The MAX3737 is compliant with the SFF-8472 transmitter diagnostic and SFP MSA timing requirements.

The MAX3737 is offered in a 5mm x 5mm 32-pin thin QFN and QFN package and operates over the -40°C to +85°C extended temperature range.

Applications

Multirate OC-3 to OC-48 FEC Transceivers

Gigabit Ethernet SFF/SFP and GBIC Transceivers

1Gbps/2Gbps Fibre Channel SFF/SFP and GBIC Transceivers

Functional Diagram and Typical Application Circuit appear at end of data sheet.

Features

- ♦ **Single 3.3V Power Supply**
- ♦ **47mA Power-Supply Current**
- ♦ **85mA Modulation Current**
- ♦ **100mA Bias Current**
- ♦ **Automatic Power Control (APC)**
- ♦ **Modulation Compensation**
- ♦ **On-Chip Temperature Compensation**
- ♦ **Self-Biased Inputs for AC-Coupling**
- ♦ **Ground-Referenced Current Monitors**
- ♦ **Laser Safety, Shutdown, and Alarm Outputs**

Ordering Information

PART	TEMP RANGE	PIN-PACKAGE
MAX3737ETJ	-40°C to +85°C	32 Thin QFN-EP*
MAX3737ETJ+	-40°C to +85°C	32 Thin QFN-EP*
MAX3737EGJ	-40°C to +85°C	32 QFN-EP*

+Denotes a lead(Pb)-free/RoHS-compliant package.
**EP = Exposed pad.*

Pin Configurations

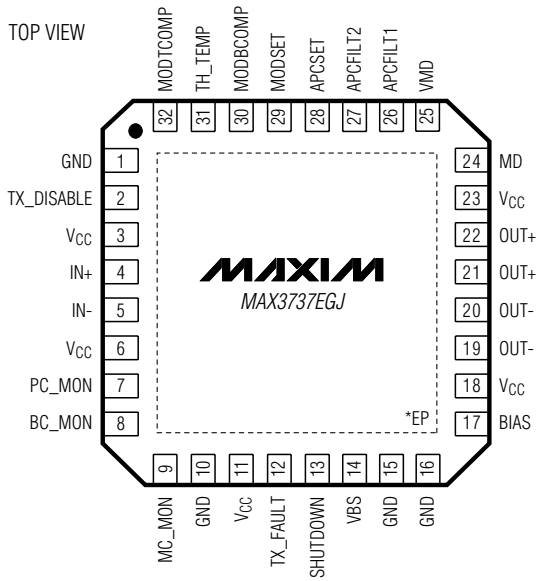

5mm x 5mm QFN

*THE EXPOSED PADDLE MUST BE SOLDERED TO SUPPLY GROUND TO ACHIEVE SPECIFIED PERFORMANCE.

Pin Configurations continued at end of data sheet.

For pricing, delivery, and ordering information, please contact Maxim Direct at 1-888-629-4642, or visit Maxim's website at www.maxim-ic.com.

Multirate Laser Driver with Extinction Ratio Control

ABSOLUTE MAXIMUM RATINGS

Supply Voltage V_{CC} .....-0.5V to +6.0V
IN+, IN-, TX_DISABLE, TX_FAULT, SHUTDOWN, MC_MON, BC_MON, PC_MON, VBS, VMD, APCFILT1, APCFILT2, MD, TH_TEMP, MODTCOMP, MODBCOMP, MODSET, and APCSET Voltage .....-0.5V to V_{CC} + 0.5V
OUT+, OUT-, BIAS Current .....-20mA to +150mA
Continuous Power Dissipation (T_A = +85°C)
QFN/TQFN (derate 21.2mW/°C above +85°C) 1.3W
Operating Junction Temperature Range .....-55°C to +150°C
Storage Temperature Range .....-55°C to +150°C
Lead Temperature (soldering, 10s) .....+300°C
Soldering Temperature (reflow)
Lead(Pb)-free .....+260°C
Containing lead(Pb) .....+240°C

Stresses beyond those listed under "Absolute Maximum Ratings" may cause permanent damage to the device. These are stress ratings only, and functional operation of the device at these or any other conditions beyond those indicated in the operational sections of the specifications is not implied. Exposure to absolute maximum rating conditions for extended periods may affect device reliability.

ELECTRICAL CHARACTERISTICS

(V_{CC} = 2.97V to 3.63V, T_A = -40°C to +85°C. Typical values are at V_{CC} = 3.3V, I_{BIAS} = 60mA, I_{MOD} = 60mA, T_A = +25°C, unless otherwise noted.) (Notes 1, 2)

PARAMETER	SYMBOL	CONDITIONS		MIN	TYP	MAX	UNITS
POWER SUPPLY							
Supply Current	I_{CC}	(Note 3)			47	60	mA
Power-Supply Noise Rejection	PSNR	f ≤ 1MHz, 100mV_{P-P} (Notes 4, 6)			33		dB
I/O SPECIFICATIONS							
Differential Input Swing	V_{ID}	DC-coupled, Figure 1		0.2		2.4	V_{P-P}
Common-Mode Input	V_{CM}			1.7		V_{CC} - V_{ID}/4	V
LASER BIAS							
Bias-Current Setting Range				1		100	mA
Bias Off Current		TX_DISABLE = high				0.1	mA
Bias-Current Monitor Ratio		I_{BIAS}/I_{BC_MON}		62	76	90	mA/mA
LASER MODULATION							
Modulation-Current Setting Range	I_{MOD}	(Note 5)		5		85	mA
Output Edge Speed		20% to 80% (Notes 6, 7)	5mA ≤ I_{MOD} ≤ 10mA		71	80	ps
			10mA < I_{MOD} ≤ 85mA		52	80	
Output Overshoot/Undershoot		(Note 7)			±6		%
Random Jitter		(Notes 6, 7)			0.65	1.3	ps
Deterministic Jitter (Notes 6, 8)		2.7Gbps	5mA ≤ I_{MOD} ≤ 10mA		25.6	40	ps_{P-P}
			10mA < I_{MOD} ≤ 85mA		16	40	
		1.25Gbps	5mA ≤ I_{MOD} ≤ 10mA		32	41	
			10mA < I_{MOD} ≤ 85mA		15	41	
		622Mbps	5mA ≤ I_{MOD} ≤ 10mA		39	46	
			10mA < I_{MOD} ≤ 85mA		21	46	
		155Mbps	5mA ≤ I_{MOD} ≤ 10mA		65	100	
			10mA < I_{MOD} ≤ 85mA		46	70	
Modulation-Current Temperature Stability		(Note 6)			±150	±480	ppm/°C

ELECTRICAL CHARACTERISTICS (continued)

(V_{CC} = 2.97V to 3.63V, T_A = -40°C to +85°C. Typical values are at V_{CC} = 3.3V, I_{BIAS} = 60mA, I_{MOD} = 60mA, T_A = +25°C, unless otherwise noted.) (Notes 1, 2)

PARAMETER	SYMBOL	CONDITIONS		MIN	TYP	MAX	UNITS
Modulation-Current Setting Error		15Ω load, T_A = +25°C	5mA ≤ I_{MOD} ≤ 10mA			±20	%
			10mA < I_{MOD} ≤ 85mA			±15	
Modulation Off Current		TX_DISABLE = high				0.1	mA
Modulation-Current Monitor Ratio		I_{MOD}/I_{MC_MON}		223	262	302	mA/mA
EXTINCTION RATIO CONTROLS							
Monitor-Diode Input Current Range	I_{MD}	Average current into the MD pin		18		1500	µA
MD Pin Voltage						1.4	V
MD-Current Monitor Ratio		I_{MD}/I_{PC_MON}		0.85	1.0	1.15	mA/mA
APC Loop Time Constant		C_{APC_FILT} = 0.01µF, $\Delta I_{MD}/\Delta I_{BIAS}$ = 1/70			3.3		µs
APC Setting Stability					±100	±480	ppm/°C
APC Setting Accuracy		T_A = +25°C				±15	%
I_{MOD} Compensation Setting Range by Bias	K	$K = \Delta I_{MOD}/\Delta I_{BIAS}$		0		1.5	mA/mA
I_{MOD} Compensation Setting Range by Temperature	TC	$TC = \Delta I_{MOD}/\Delta T$ (Note 6)		0		1.0	mA/°C
Threshold Setting Range for Temperature Compensation	T_{TH}	(Note 6)		10		60	°C
LASER SAFETY AND CONTROL							
Bias and Modulation Turn-Off Delay		C_{APC_FILT} = 0.01µF, $\Delta I_{MD}/\Delta I_{BIAS}$ = 1/80 (Note 6)				5	µs
Bias and Modulation Turn-On Delay		C_{APC_FILT} = 0.01µF, $\Delta I_{MD}/\Delta I_{BIAS}$ = 1/80 (Note 6)				600	µs
Threshold Voltage at Monitor Pins	V_{REF}	Figure 5		1.14	1.3	1.39	V
INTERFACE SIGNALS							
TX_DISABLE Input High	V_{HI}			2.0			V
TX_DISABLE Input Low	V_{LO}	R_{PULL} = 7.5kΩ				0.8	V
TX_DISABLE Input Current		$V_{HI} = V_{CC}$				15	µA
		V_{LO} = GND			-450	-800	
TX_FAULT Output Low		Sinking 1mA, open collector				0.4	V
Shutdown Output High		Sourcing 100µA		V_{CC} - 0.4			V
Shutdown Output Low		Sinking 100µA				0.4	V

Note 1: AC characterization is performed using the circuit in Figure 2 using a PRBS 2^{23} - 1 or equivalent test pattern.
Note 2: Specifications at -40°C are guaranteed by design and characterization.
Note 3: Excluding I_{BIAS} and I_{MOD}. Input data is AC-coupled. TX_FAULT open, SHUTDOWN open.
Note 4: Power-supply noise rejection (PSNR) = $20\log_{10}(V_{noise\ (on\ VCC)}/\Delta V_{OUT})$. V_{OUT} is the voltage across the 15Ω load when IN+ is high.
Note 5: The minimum required voltage at the OUT+ and OUT- pins is +0.75V.
Note 6: Guaranteed by design and characterization.
Note 7: Tested with 00001111 pattern at 2.7Gbps.
Note 8: DJ includes pulse-width distortion (PWD).

Multirate Laser Driver with Extinction Ratio Control

Typical Operating Characteristics

(V_{CC} = 3.3V, C_{APC} = 0.01µF, I_{BIAS} = 20mA, I_{MOD} = 30mA, T_A = +25°C, unless otherwise noted.)

OPTICAL EYE DIAGRAM (2.7Gbps, 2^7 - 1PRBS, 2.3GHz FILTER)

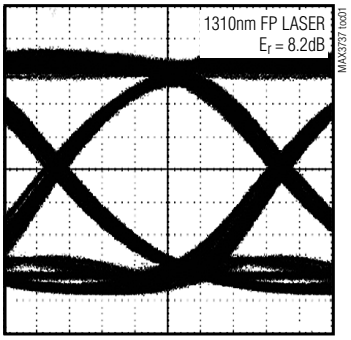

54ps/div

OPTICAL EYE DIAGRAM (1.25Gbps, 2^7 - 1PRBS, 940MHz FILTER)

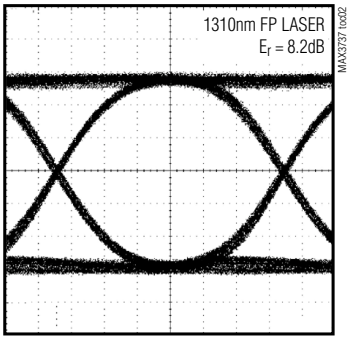

116ps/div

OPTICAL EYE DIAGRAM (155Mbps, 2^7 - 1PRBS, 117MHz FILTER, C_{APC} = 0.1µF)

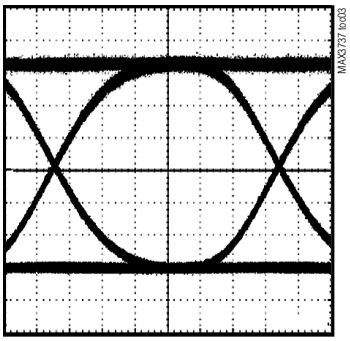

920ps/div

ELECTRICAL EYE DIAGRAM (I_{MOD} = 30mA, 2.7Gbps, 2^7 - 1PRBS)

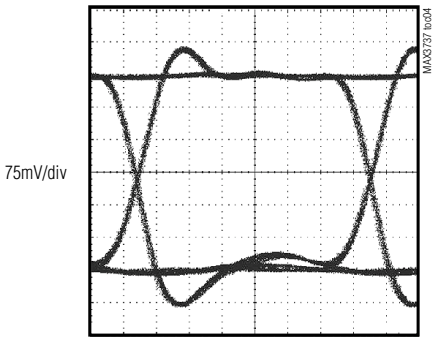

52ps/div

SUPPLY CURRENT (I_{CC}) vs. TEMPERATURE (EXCLUDES BIAS AND MODULATION CURRENTS)

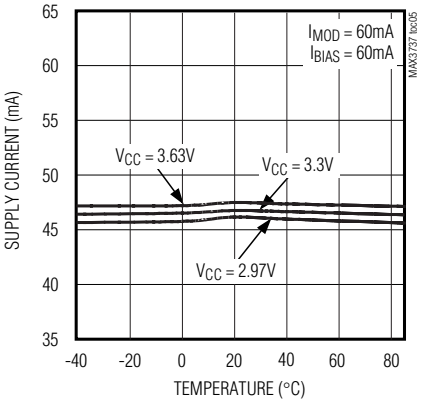

BIAS-CURRENT MONITOR GAIN vs. TEMPERATURE

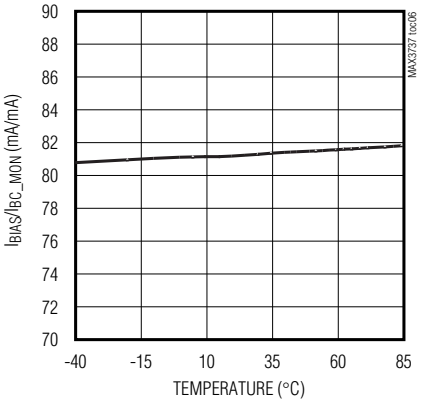

PHOTO-CURRENT MONITOR GAIN vs. TEMPERATURE

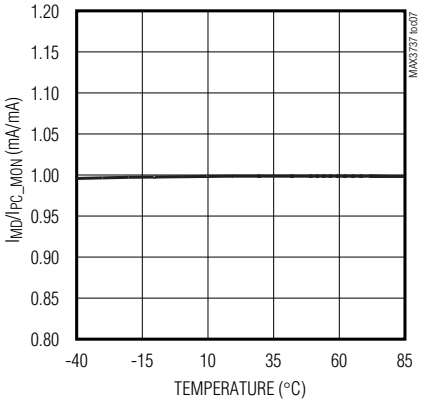

Typical Operating Characteristics (continued)

(V_{CC} = 3.3V, C_{APC} = 0.01µF, I_{BIAS} = 20mA, I_{MOD} = 30mA, T_A = +25°C, unless otherwise noted.)

MODULATION-CURRENT MONITOR GAIN vs. TEMPERATURE

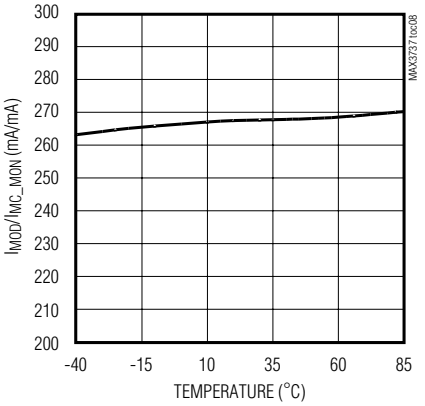

MODULATION CURRENT vs. R_{MODSET}

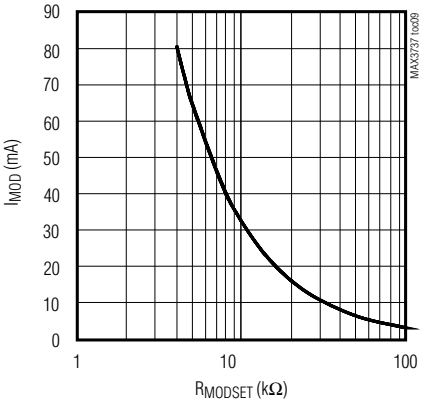

PHOTODIODE CURRENT vs. R_{APCSET}

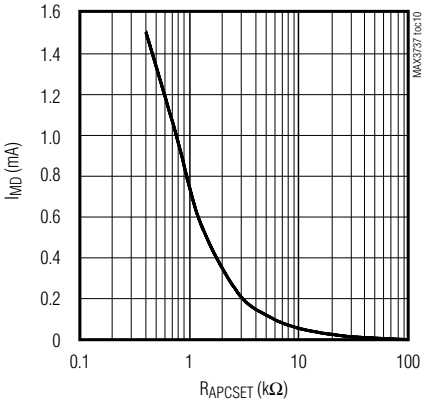

DETERMINISTIC JITTER vs. MODULATION CURRENT

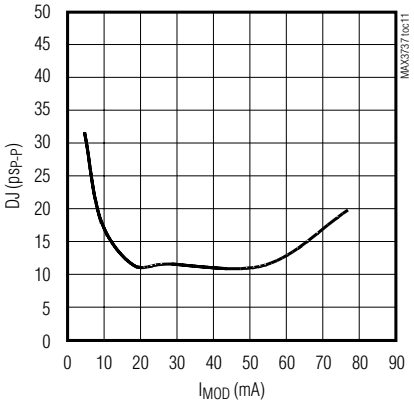

RANDOM JITTER vs. MODULATION CURRENT

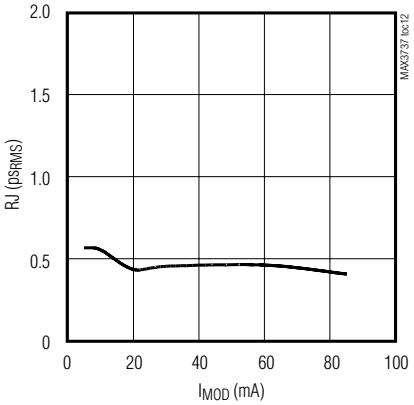

COMPENSATION (K) vs. $R_{MODBCOMP}$

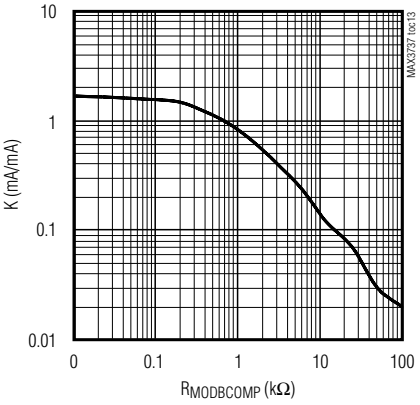

TEMPERATURE COMPENSATION vs. R_{TH_TEMP} ($R_{MODTCOMP}$ = 500Ω)

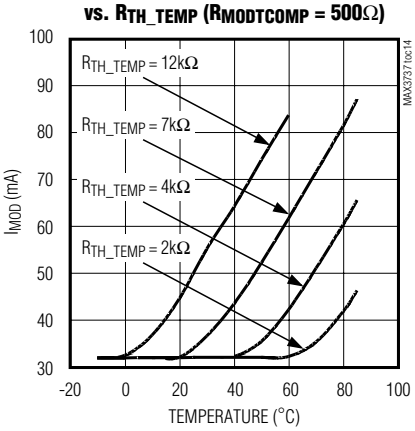

Multirate Laser Driver with Extinction Ratio Control

Typical Operating Characteristics (continued)

(V_{CC} = 3.3V, C_{APC} = 0.01µF, I_{BIAS} = 20mA, I_{MOD} = 30mA, T_A = +25°C, unless otherwise noted.)

TEMPERATURE COMPENSATION vs. R_{TH_TEMP} ($R_{MODTCOMP}$ = 10kΩ)

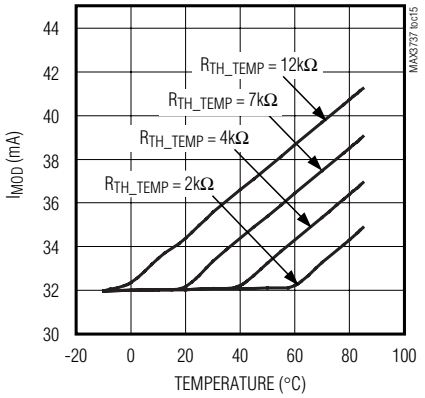

HOT PLUG WITH TX_DISABLE LOW

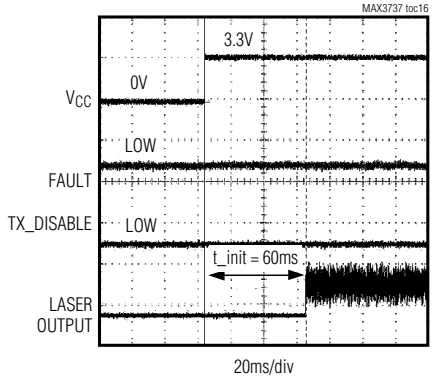

TRANSMITTER ENABLE

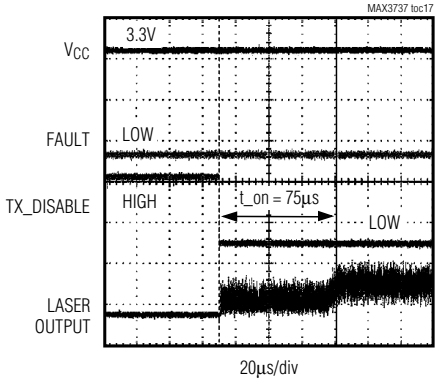

TRANSMITTER DISABLE

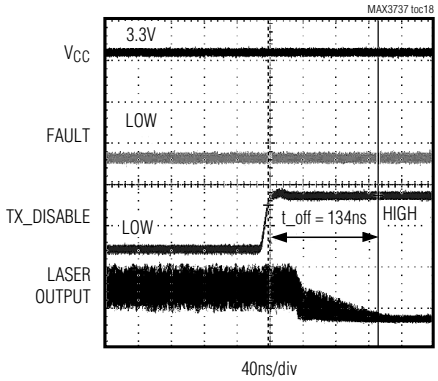

RESPONSE TO FAULT

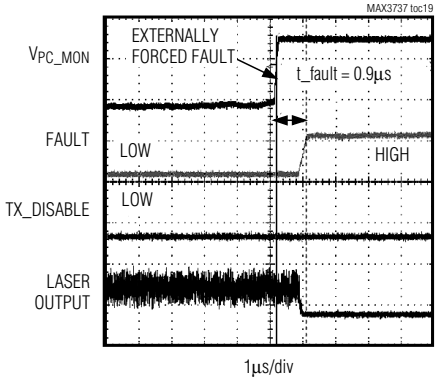

FAULT RECOVERY TIME

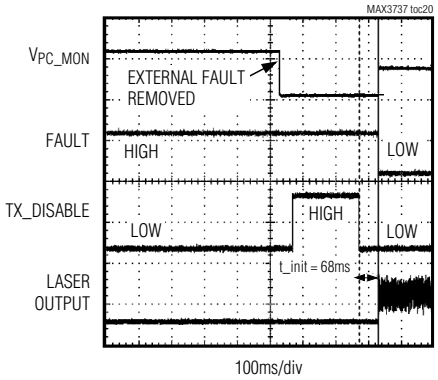

Pin Description

PIN	NAME	FUNCTION
1, 10, 15, 16	GND	Ground
2	TX_DISABLE	Transmitter Disable, TTL. Laser output is disabled when TX_DISABLE is asserted high or left unconnected. The laser output is enabled when this pin is asserted low.
3, 6, 11, 18, 23	V_{CC}	3.3V Supply Voltage
4	IN+	Noninverted Data Input
5	IN-	Inverted Data Input
7	PC_MON	Photodiode-Current Monitor Output. Current out of this pin develops a ground-referenced voltage across an external resistor that is proportional to the monitor-diode current.
8	BC_MON	Bias-Current Monitor Output. Current out of this pin develops a ground-referenced voltage across an external resistor that is proportional to the bias current.
9	MC_MON	Modulation-Current Monitor Output. Current out of this pin develops a ground-referenced voltage across an external resistor that is proportional to the modulation current amplitude.
12	TX_FAULT	Open-Collector Transmit Fault Indicator (Table 1)
13	SHUTDOWN	Shutdown Driver Output. Voltage output to control an external transistor for optional shutdown circuitry.
14	VBS	Bias Voltage Sense. Isolated tap (3kΩ ±15%) on the bias output reduces component count when a precision bias sense resistor is used.
17	BIAS	Laser Bias-Current Output
19, 20	OUT-	Inverted Modulation-Current Output (Connect Pins 19 and 20 Together). I_{MOD} flows into this pin when input data is low.
21, 22	OUT+	Noninverted Modulation-Current Output (Connect Pins 21 and 22 Together). I_{MOD} flows into this pin when input data is high.
24	MD	Monitor Photodiode Input. Connect this pin to the anode of a monitor photodiode. A capacitor to ground is required to filter the high-speed AC monitor photocurrent.
25	VMD	Monitor Photodiode Voltage Sense. Isolated tap (3kΩ ±15%) on the MD input reduces component count when a precision photodiode current-sense resistor is used.
26	APCFILT1	Connect a capacitor (C_{APC}) between pin 26 (APCFILT1) and pin 27 (APCFILT2) to set the dominant pole of the APC feedback loop.
27	APCFILT2	(See Pin 26.) The maximum capacitance allowed on this pin is 10pF.
28	APCSET	A resistor connected from this pin to ground sets the desired average optical power. The maximum capacitance allowed on this pin is 10pF.
29	MODSET	A resistor connected from this pin to ground sets the desired constant portion of the modulation current.
30	MODBCOMP	Modulation-Current Compensation from Bias. Couples the bias current to the modulation current. Mirrors I_{BIAS} through an external resistor. Leave open for zero coupling.
31	TH_TEMP	Threshold for Temperature Compensation. A resistor at this pin programs the temperature, above which compensation is added to the modulation current.
32	MODTCOMP	Modulation-Current Compensation from Temperature. A resistor at this pin sets the temperature coefficient of the modulation current when above the threshold temperature. Leave open for zero temperature compensation.
—	EP	Exposed Pad. Solder the exposed pad to the circuit board ground for specified thermal and electrical performance.

Multirate Laser Driver with Extinction Ratio Control

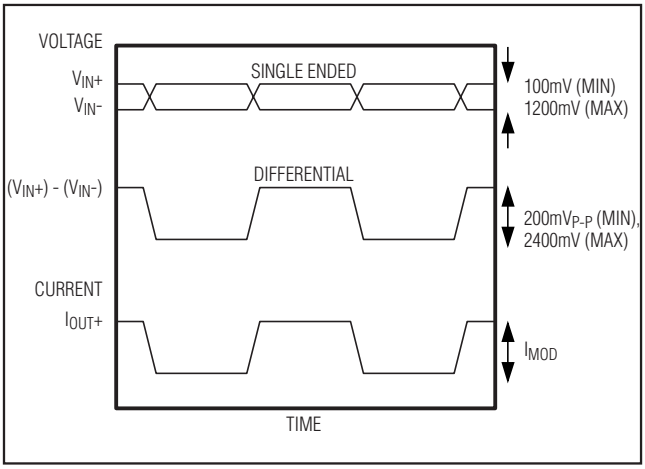

Figure 1. Required Input Signal and Output Polarity

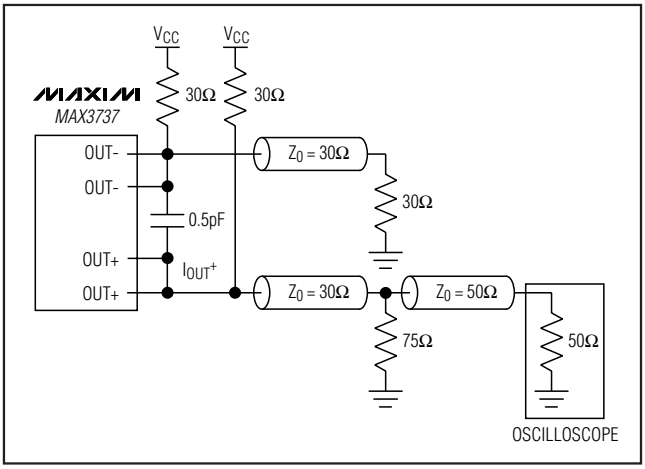

Figure 2. Test Circuit for Characterization

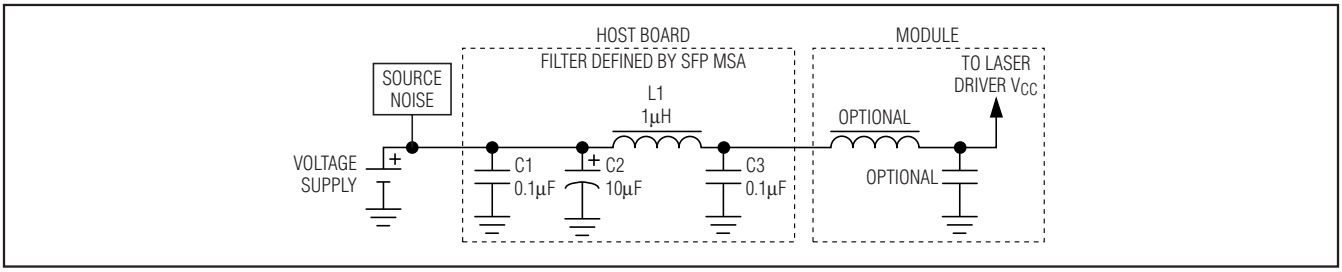

Figure 3. Supply Filter

Detailed Description

The MAX3737 laser driver consists of three main parts: a high-speed modulation driver, biasing block with ERC, and safety circuitry. The circuit design is optimized for high-speed, low-voltage (3.3V) operation (Figure 4).

High-Speed Modulation Driver

The output stage is composed of a high-speed differential pair and a programmable modulation current source. The MAX3737 is optimized for driving a 15Ω load. The minimum instantaneous voltage required at OUT+ is 0.7V for modulation current up to 60mA and 0.75V for currents from 60mA to 85mA. Operation above 60mA can be accomplished by AC-coupling or with sufficient voltage at the laser to meet the driver output voltage requirement.

To interface with the laser diode, a damping resistor (R_D) is required. The combined resistance due to the series damping resistor and the equivalent series resistance (ESR) of the laser diode should equal 15Ω. To further damp aberrations caused by laser diode parasitic inductance, an RC shunt network may be necessary. Refer to Application Note 274: *HFAN-02.0: Interfacing Maxim Laser Drivers with Laser Diodes* for more information.

At data rates of 2.7Gbps, any capacitive load at the cathode of a laser diode degrades optical output performance. Because the BIAS output is directly connected to the laser cathode, minimize the parasitic capacitance associated with the pin by using an inductor to isolate the BIAS pin parasitics from the laser cathode.

Extinction Ratio Control

The extinction ratio (r_e) is the laser on-state power divided by the off-state power. Extinction ratio remains constant if peak-to-peak and average power are held constant:

$$r_e = (2P_{AVG} + P_{P-P}) / (2P_{AVG} - P_{P-P})$$

Average power is regulated using APC, which keeps constant current from a photodiode coupled to the laser. Peak-to-peak power is maintained by compensating the modulation current for reduced slope efficiency (η) of the laser over time and temperature:

$$P_{AVG} = \frac{I_{MD}}{\rho_{MON}}$$

$$P_{P-P} = \eta \times I_{MOD}$$

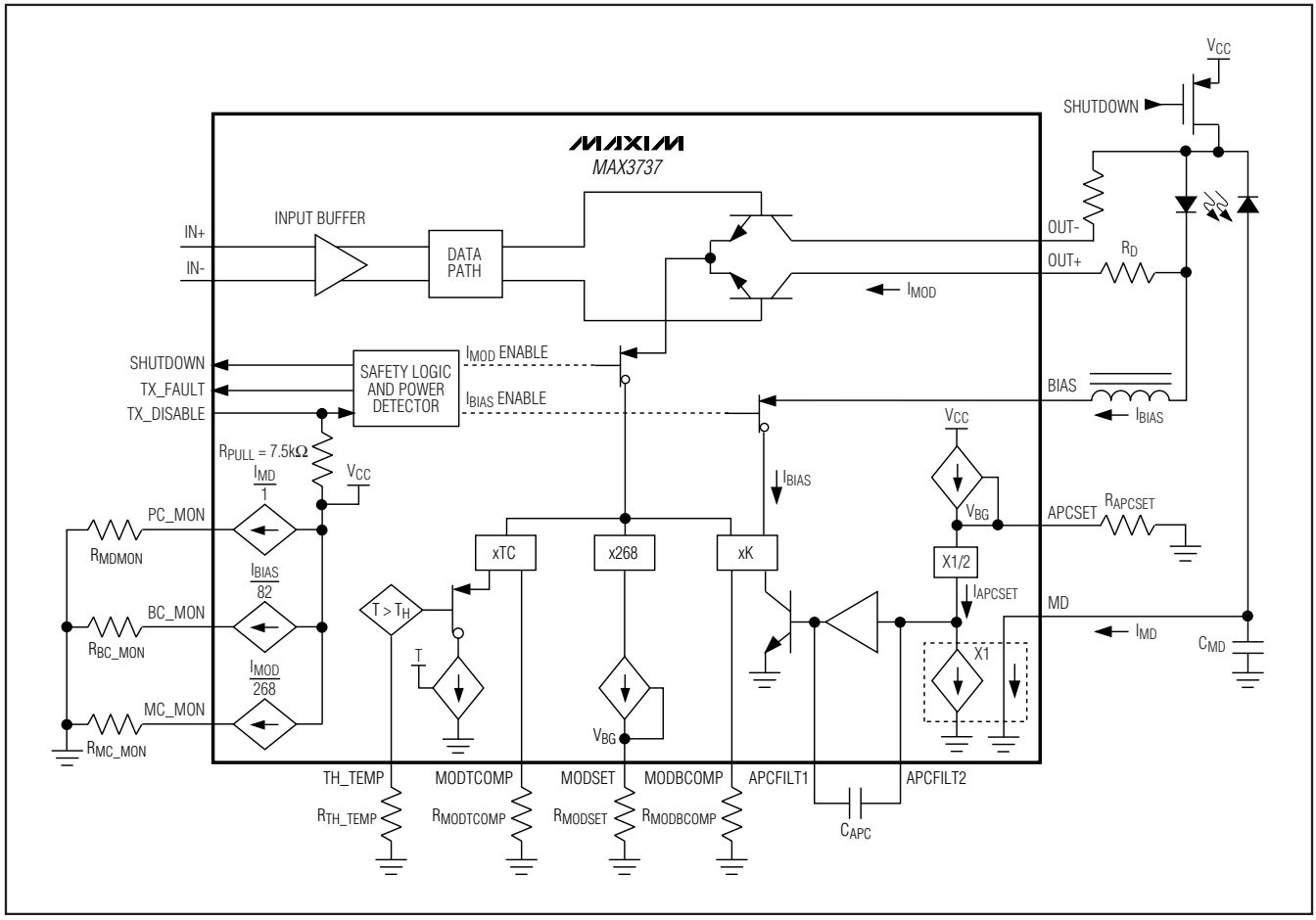

Figure 4. Functional Diagram

Modulation compensation from bias increases the modulation current by a user-selected proportion (K) needed to maintain peak-to-peak laser power as bias current increases with temperature. Refer to Maxim Application Note 1119: *HFAN-02.2.1: Maximizing the Extinction Ratio of Optical Transmitters Using K-Factor Control* for details:

$$K = \frac{\Delta I_{MOD}}{\Delta I_{BIAS}}$$

This provides a first-order approximation of the current increase needed to maintain peak-to-peak power. Slope efficiency decreases more rapidly as temperature increases. The MAX3737 provides additional temperature compensation as temperature increases past a user-defined threshold (T_{TH}).

Safety Circuitry

The safety circuitry contains a disable, input (TX_DISABLE), a latched fault output (TX_FAULT), and fault detectors (Figure 5). This circuitry monitors the operation of the laser driver and forces a shutdown if a fault is detected (Table 1). The TX_FAULT pin should be pulled high with a 4.7kΩ to 10kΩ resistor to V_{CC} as required by the SFP MSA. A single-point fault can be a short to V_{CC} or GND. See Table 2 to view the circuit response to various single-point failures. The transmit fault condition is latched until reset by a toggle of TX_DISABLE or V_{CC}. The laser driver offers redundant laser diode shutdown through the optional shutdown circuitry as shown in the *Typical Operating Circuit*. This shutdown transistor prevents a single-point fault at the laser from creating an unsafe condition.

Multirate Laser Driver with Extinction Ratio Control

Table 1. Typical Fault Conditions

1	If any of the I/O pins is shorted to GND or V_{CC} (single-point failure; see Table 2), and the bias current or the photocurrent exceed the programmed threshold.
2	End-of-life (EOL) condition of the laser diode. The bias current and/or the photocurrent exceed the programmed threshold.
3	Laser cathode is grounded and photocurrent exceeds the programming threshold.
4	No feedback for the APC loop (broken interconnection, defective monitor photodiode), and the bias current exceeds the programmed threshold.

Table 2. Circuit Responses to Various Single-Point Faults

PIN	CIRCUIT RESPONSE TO OVERVOLTAGE OR SHORT TO V_{CC}	CIRCUIT RESPONSE TO UNDERVOLTAGE OR SHORT TO GROUND
TX_FAULT	Does not affect laser power.	Does not effect laser power.
TX_DISABLE	Modulation and bias currents are disabled.	Normal condition for circuit operation.
IN+	The optical average power increases and a fault occurs if V_{PC_MON} exceeds the threshold. The APC loop responds by decreasing the bias current.	The optical average power decreases and the APC loop responds by increasing the bias current. A fault state occurs if V_{BC_MON} exceeds the threshold voltage.
IN-	The optical average power decreases and the APC loop responds by increasing the bias current. A fault state occurs if V_{BC_MON} exceeds the threshold voltage.	The optical average power increases and a fault occurs if V_{PC_MON} exceeds the threshold. The APC loop responds by decreasing the bias current.
MD	This disables bias current. A fault state occurs.	The APC circuit responds by increasing bias current until a fault is detected, then a fault* state occurs.
SHUTDOWN	Does not affect laser power. If the shutdown circuitry is used, laser current is disabled.	Does not affect laser power.
BIAS	In this condition, laser forward voltage is 0V and no light is emitted.	Fault state* occurs. If the shutdown circuitry is used, laser current is disabled.
OUT+	The APC circuit responds by increasing the bias current until a fault is detected, then a fault state* occurs.	Fault state* occurs. If the shutdown circuitry is used, laser current is disabled.
OUT-	Does not affect laser power.	Does not affect laser power.
PC_MON	Fault state* occurs.	Does not affect laser power.
BC_MON	Fault state* occurs.	Does not affect laser power.
MC_MON	Fault state* occurs.	Does not affect laser power.
APCFILT1	I_{BIAS} increases until V_{BC_MON} exceeds the threshold voltage.	I_{BIAS} increases until V_{BC_MON} exceeds the threshold voltage.
APCFILT2	I_{BIAS} increases until V_{BC_MON} exceeds the threshold voltage.	I_{BIAS} increases until V_{BC_MON} exceeds the threshold voltage.
MODSET	Does not affect laser power.	Fault state* occurs.
APCSET	Does not affect laser power.	Fault state* occurs.

**A fault state asserts the TX_FAULT pin, disables the modulation and bias currents, and asserts the SHUTDOWN pin.*

Safety Circuitry Current Monitors

The MAX3737 features monitors (MC_MON, BC_MON, PC_MON) for modulation current (I_{MOD}), bias current (I_{BIAS}), and photocurrent (I_{MD}). The monitors are realized by mirroring a fraction of the currents and developing voltages across external resistors connected to ground. Voltages greater than V_{REF} at MC_MON, PC_MON, or BC_MON result in a fault state. For example, connecting a

100Ω resistor to ground at each monitor output gives the following relationships:

$$V_{MC_MON} = (I_{MOD} / 268) \times 100\Omega$$

$$V_{BC_MON} = (I_{BIAS} / 82) \times 100\Omega$$

$$V_{PC_MON} = I_{MD} \times 100\Omega$$

External sense resistors can be used for high-accuracy measurement of bias and photodiode currents. On-chip isolation resistors are included to reduce the number of components needed to implement this function.

Design Procedure

When designing a laser transmitter, the optical output is usually expressed in terms of average power and extinction ratio. Table 3 gives relationships that are helpful in converting between the optical average power and the modulation current. These relationships are valid if the mark density and duty cycle of the optical waveform are 50%.

For a desired laser average optical power (P_{AVG}) and optical extinction ratio (r_e), the required bias and modulation currents can be calculated using the equations in Table 3. Proper setting of these currents requires knowledge of the laser to monitor transfer (ρ_{MON}) and slope efficiency (η).

Programming the Monitor Diode Current Set Point

The MAX3737 operates in APC mode at all times. The bias current is automatically set so average laser power is determined by the APCSET resistor:

$$P_{AVG} = \frac{I_{MD}}{\rho_{MON}}$$

The APCSET pin controls the set point for the monitor-diode current. An internal current regulator establishes the APCSET current in the same manner as the MODSET pin. See the I_{MD} vs. R_{APCSET} graph in the *Typical Operating Characteristics* and select the value of R_{APCSET} that corresponds to the required current at +25°C:

$$I_{MD} = \frac{1}{2} \times \frac{V_{REF}}{R_{APCSET}}$$

The laser driver automatically adjusts the bias to maintain the constant average power. For DC-coupled laser diodes:

$$I_{AVG} = I_{BIAS} + \frac{I_{MOD}}{2}$$

Programming the Modulation Current with Compensation

Determine the modulation current from the laser slope efficiency:

$$I_{MOD} = 2 \times \frac{P_{AVG}}{\eta} \times \frac{r_e - 1}{r_e + 1}$$

The modulation current of the MAX3737 consists of a static modulation current (I_{MODS}), a current proportional to I_{BIAS}, and a current proportional to temperature. The portion of I_{MOD} set by MODSET is established by an internal current regulator, which maintains the reference voltage of V_{REF} across the external programming resistor. See to the I_{MOD} vs. R_{MODSET} graph in the *Typical Operating Characteristics* and select the value of R_{MODSET} that corresponds to the required current at +25°C:

Table 3. Optical Power Relations

PARAMETER	SYMBOL	RELATION
Average power	P_{AVG}	$P_{AVG} = (P_0 + P_1) / 2$
Extinction ratio	r_e	$r_e = P_1 / P_0$
Optical power of a 1	P_1	$P_1 = 2P_{AVG}\, r_e / (r_e + 1)$
Optical power of a zero	P_0	$P_0 = 2P_{AVG} / (r_e + 1)$
Optical amplitude	P_{P-P}	$P_{P-P} = P_1 - P_0$
Laser slope efficiency	η	$\eta = P_{P-P} / I_{MOD}$
Modulation current	I_{MOD}	$I_{MOD} = P_{P-P} / \eta$
Threshold current	I_{TH}	P_0 at $I \geq I_{TH}$
Bias current (AC-coupled)	I_{BIAS}	$I_{BIAS} \geq I_{TH} + I_{MOD} / 2$
Laser to monitor transfer	ρ_{MON}	I_{MD} / P_{AVG}

Note: *Assuming a 50% average input duty cycle and mark density.*

Multirate Laser Driver with Extinction Ratio Control

$$I_{MOD} = I_{MODS} + K \times I_{BIAS} + I_{MODT}$$

$$I_{MODS} = 268 \times \frac{V_{REF}}{R_{MODSET}}$$

$$I_{MODT} = TC \times (T - T_{TH}) \mid T > T_{TH}$$
$$I_{MODT} = 0 \mid T \le T_{TH}$$

An external resistor at the MODBCOMP pin sets current proportional to I_{BIAS}. Open circuiting the MODBCOMP pin can turn off the interaction between I_{BIAS} and I_{MOD}:

$$K = \frac{1700}{1000 + R_{MODBCOMP}} \pm 10\%$$

If I_{MOD} must be increased from I_{MOD1} to I_{MOD2} to maintain the extinction ratio at elevated temperature, the required compensation factor is:

$$K = \frac{I_{MOD2} - I_{MOD1}}{I_{BIAS2} - I_{BIAS1}}$$

A threshold for additional temperature compensation can be set with a programming resistor at the TH_TEMP pin:

$$T_{TH} = -70°C + \frac{1.45M\Omega}{9.2k\Omega + R_{TH_TEMP}} °C \pm 10\%$$

The temperature coefficient of thermal compensation above T_{TH} is set by $R_{MODTCOMP}$. Leaving the MODTCOMP pin open disables additional thermal compensation:

$$TC = \frac{1}{0.5 + R_{MODTCOMP}(k\Omega)} \frac{mA}{°C} \pm 10\%$$

Current Compliance ($I_{MOD} \le 60mA$), DC-Coupled

The minimum voltage at the OUT+ and OUT- pins is 0.7V.

For:

V_{DIODE}—Diode bias point voltage (1.2V typ)

R_L—Diode bias point resistance (5Ω typ)

R_D—Series matching resistor (20Ω typ)

For compliance:

$$V_{OUT+} = V_{CC} - V_{DIODE} - I_{MOD} \times (R_D + R_L) - I_{BIAS} \times R_L \ge 0.7V$$

Current Compliance ($I_{MOD} > 60mA$), AC-Coupled

For applications requiring modulation current greater than 60mA, headroom is insufficient for proper operation of the laser driver if the laser is DC-coupled. To avoid this problem, the MAX3737's modulation output can be AC-coupled to the cathode of a laser diode. An external pullup inductor is necessary to DC-bias the modulation output at V_{CC}. Such a configuration isolates laser forward voltage from the output circuitry and allows the output at OUT+ to swing above and below the supply voltage (V_{CC}). When AC-coupled, the MAX3737 modulation current can be programmed up to 85mA. Refer to Application Note 274: *HFAN-02.0: Interfacing Maxim Laser Drivers with Laser Diodes* for more information on AC-coupling laser drivers to laser diodes.

For compliance:

$$V_{OUT+} = V_{CC} - \frac{I_{MOD}}{2} \times (R_D + R_L) \ge 0.75V$$

Determine C_{APC}

The APC loop filter capacitor C_{APC} must be selected to balance the requirements for fast turn-on and minimal interaction with low frequencies in the data pattern. The low-frequency cutoff is:

$$C_{APC}(\mu F) \approx \frac{68}{f_{3DB}(kHz)} \times (\eta \times \rho_{MON})^{1.1}$$

High-frequency noise can be filtered with an additional cap C_{MD} from the MD pin to ground:

$$C_{MD} \approx \frac{C_{APC}}{4}$$

The MAX3737 is designed so that turn-on time is faster than 1ms for most laser gain values ($\eta \times \rho_{MON}$). Choosing a smaller value of C_{APC} reduces turn-on time. Careful balance between turn-on time and low-frequency cutoff may be needed at low data rates for some values of laser gain.

Interface Models

Figures 6 and 7 show simplified input and output circuits for the MAX3737 laser driver. If dice are used, replace package parasitic elements with bondwire parasitic elements.

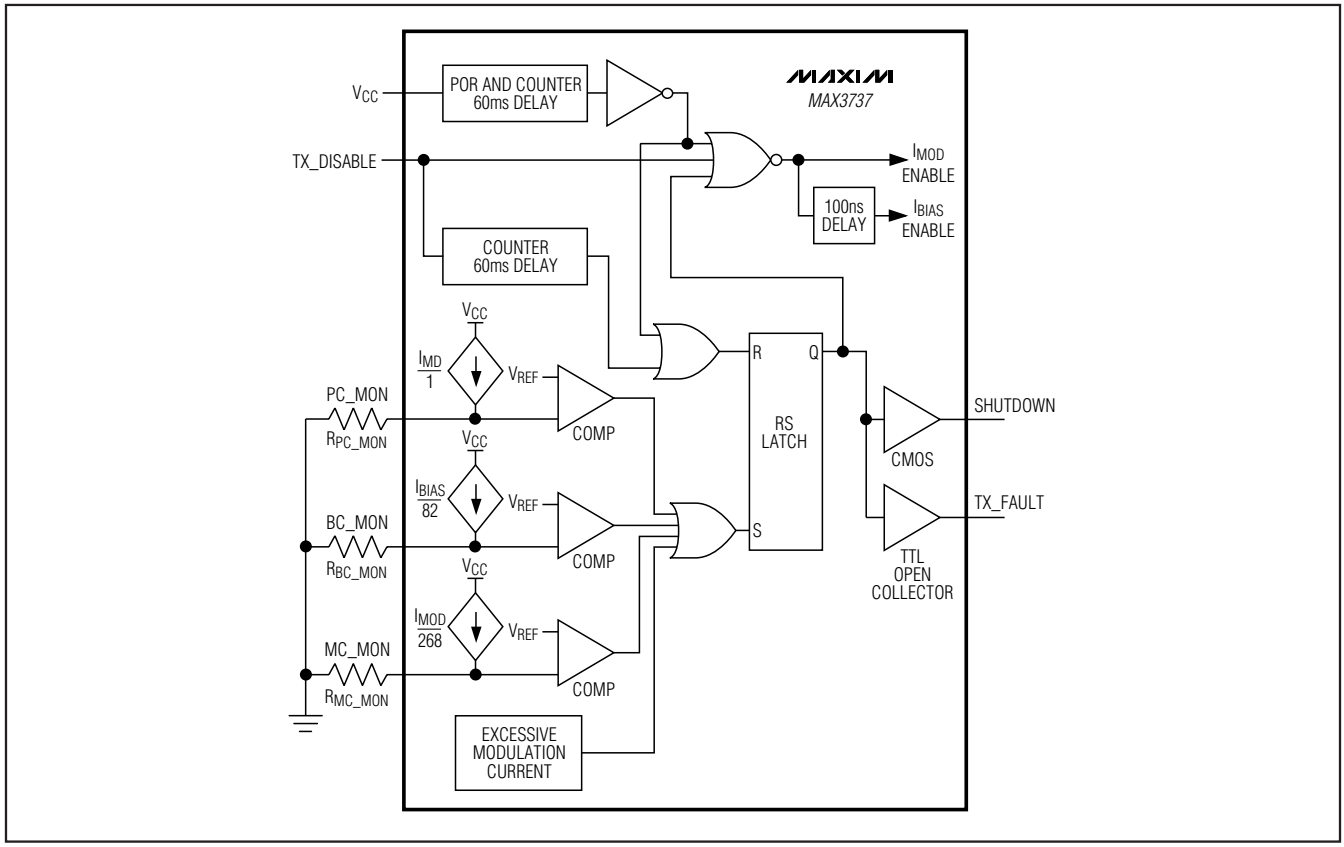

Figure 5. Simplified Safety Circuit

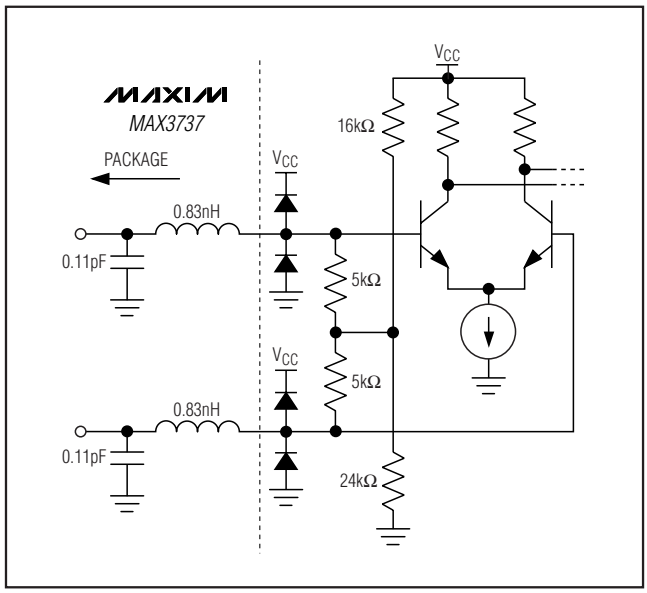

Figure 6. Simplified Input Structure

Layout Considerations

To minimize loss and crosstalk, keep the connections between the MAX3737 output and the laser diode as short as possible. Use good high-frequency layout techniques and multilayer boards with uninterrupted ground plane to minimize EMI and crosstalk. Circuit boards should be made using low-loss dielectrics. Use controlled-impedance lines for data inputs, as well as the module output.

Laser Safety and IEC 825

Using the MAX3737 laser driver alone does not ensure that a transmitter design is IEC 825 compliant. The entire transmitter circuit and component selections must be considered. Each customer must determine the level of fault tolerance required by their application, recognizing that Maxim products are not designed or authorized for use as components in systems intended for surgical implant into the body, for applications intended to support or sustain life, or for any other application where the failure of a Maxim product could create a situation where personal injury or death may occur.

Multirate Laser Driver with Extinction Ratio Control

Exposed-Pad (EP) Package

The exposed-pad on the 32-pin QFN provides a very low thermal resistance path for heat removal from the IC. The pad is also electrical ground on the MAX3737 and should be soldered to the circuit board ground for proper thermal and electrical performance. Refer to Application Note 862: HFAN-08.1: *Thermal Considerations of QFN and Other Exposed-Paddle Packages at* **www.maxim-ic.com** for additional information.

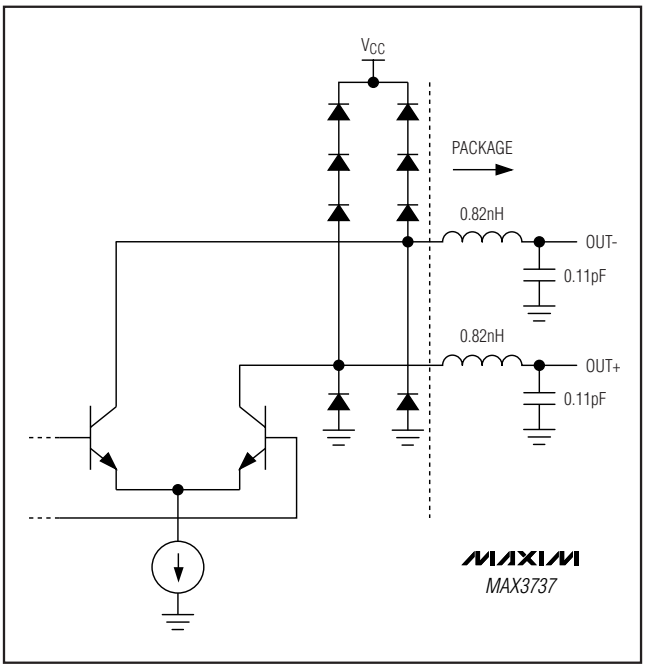

Figure 7. Simplified Output Structure

Pin Configurations (continued)

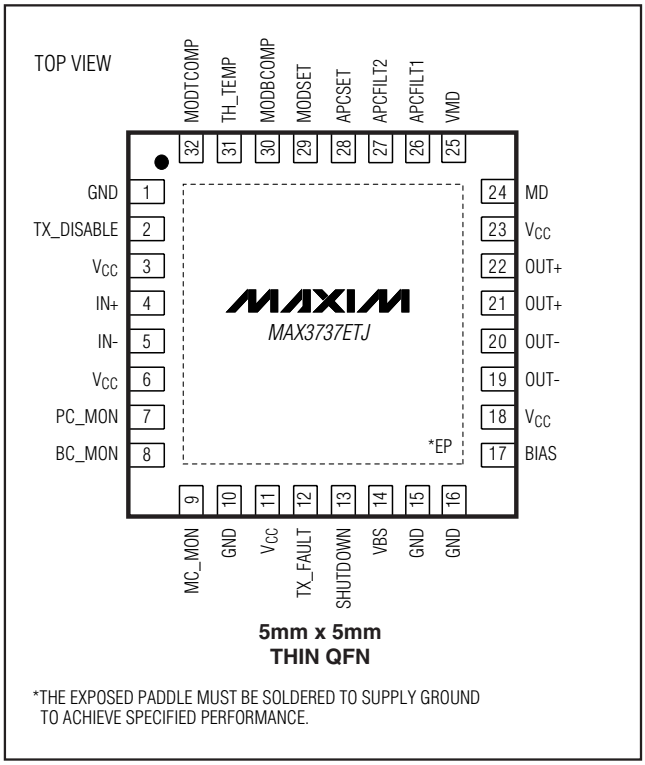

5mm x 5mm THIN QFN

*THE EXPOSED PADDLE MUST BE SOLDERED TO SUPPLY GROUND TO ACHIEVE SPECIFIED PERFORMANCE.

Chip Information

PROCESS: SiGe/BIPOLAR

Typical Operating Circuit

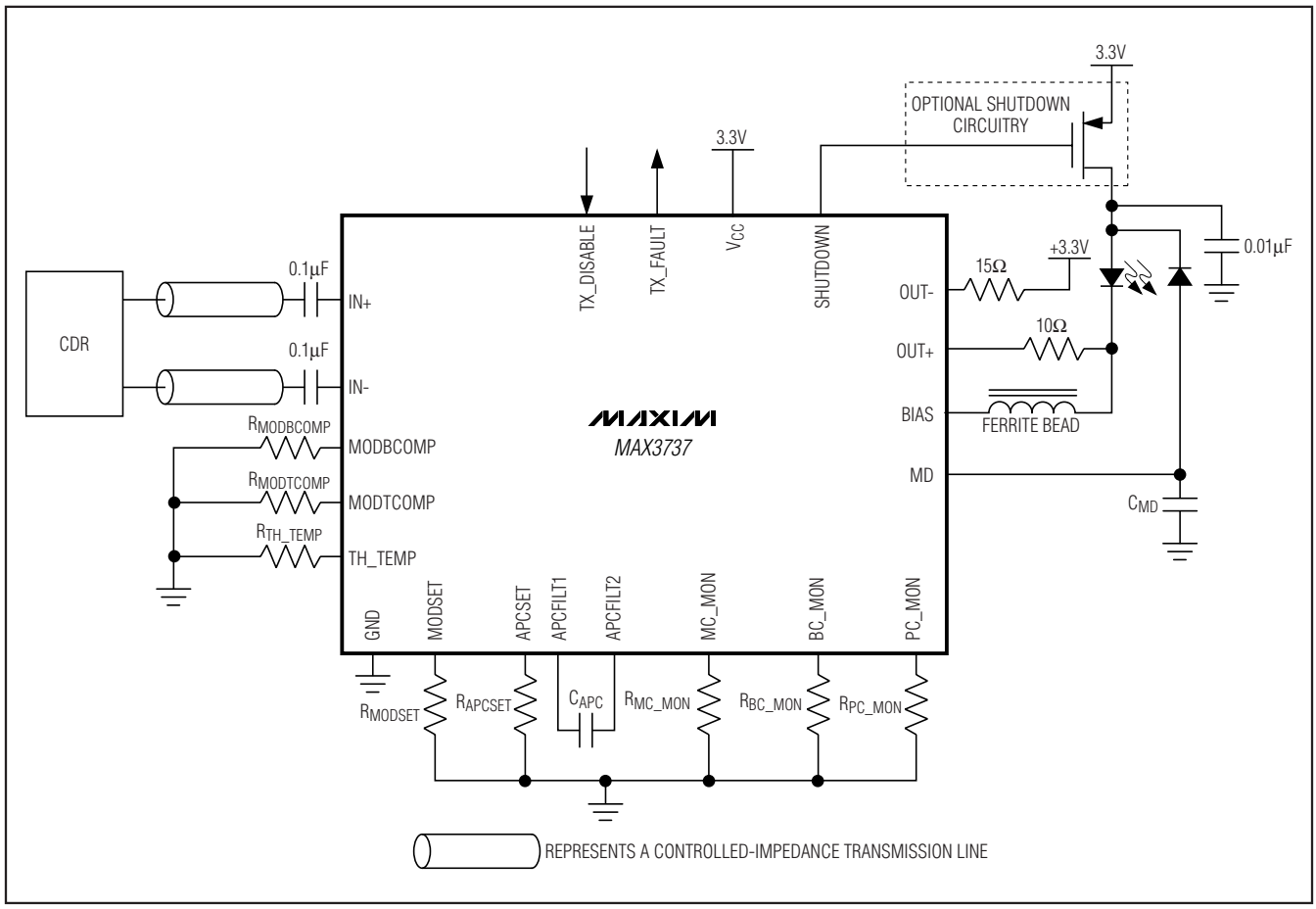

Package Information

For the latest package outline information and land patterns (footprints), go to **www.maxim-ic.com/packages**. Note that a "+", "#", or "-" in the package code indicates RoHS status only. Package drawings may show a different suffix character, but the drawing pertains to the package regardless of RoHS status.

PACKAGE TYPE	PACKAGE CODE	OUTLINE NO.	LAND PATTERN NO.
32 TQFN-EP	T3255-3	**21-0140**	**90-0001**
32 QFN-EP	G3255-1	**21-0091**	**90-0279**

Multirate Laser Driver with Extinction Ratio Control

Revision History

REVISION NUMBER	REVISION DATE	DESCRIPTION	PAGES CHANGED
3	6/11	Added lead and soldering temperature information to the *Absolute Maximum Ratings*; changed the Bias-Current Monitor Ratio parameter specs from 68mA/mA (min), 82mA/mA (typ), 95mA/mA (max) to 62mA/mA (min), 76mA/mA (typ), 90mA/mA (max) in the *Electrical Characteristics* table; updated the APCFILT2 and APCSET pin functions in the *Pin Description* table; added the *Package Information* table	2, 7, 15

Maxim cannot assume responsibility for use of any circuitry other than circuitry entirely embodied in a Maxim product. No circuit patent licenses are implied. Maxim reserves the right to change the circuitry and specifications without notice at any time.

© 2011 Maxim Integrated Products Maxim is a registered trademark of Maxim Integrated Products, Inc.

Мы молодая и активно развивающаяся компания в области поставок электронных компонентов. Мы поставляем электронные компоненты отечественного и импортного производства напрямую от производителей и с крупнейших складов мира.

Благодаря сотрудничеству с мировыми поставщиками мы осуществляем комплексные и плановые поставки широчайшего спектра электронных компонентов.

Собственная эффективная логистика и склад в обеспечивает надежную поставку продукции в точно указанные сроки по всей России.

Мы осуществляем техническую поддержку нашим клиентам и предпродажную проверку качества продукции. На все поставляемые продукты мы предоставляем гарантию .

Осуществляем поставки продукции под контролем ВП МО РФ на предприятия военно-промышленного комплекса России , а также работаем в рамках 275 ФЗ с открытием отдельных счетов в уполномоченном банке. Система менеджмента качества компании соответствует требованиям ГОСТ ISO 9001.

Минимальные сроки поставки, гибкие цены, неограниченный ассортимент и индивидуальный подход к клиентам являются основой для выстраивания долгосрочного и эффективного сотрудничества с предприятиями радиоэлектронной промышленности, предприятиями ВПК и научно-исследовательскими институтами России.

С нами вы становитесь еще успешнее!

Наши контакты:

Телефон: +7 812 627 14 35

Электронная почта: sales@st-electron.ru

Адрес: 198099, Санкт-Петербург, Промышленная ул, дом № 19, литера Н, помещение 100-Н Офис 331