TUSONIX

Catalog 7600R4

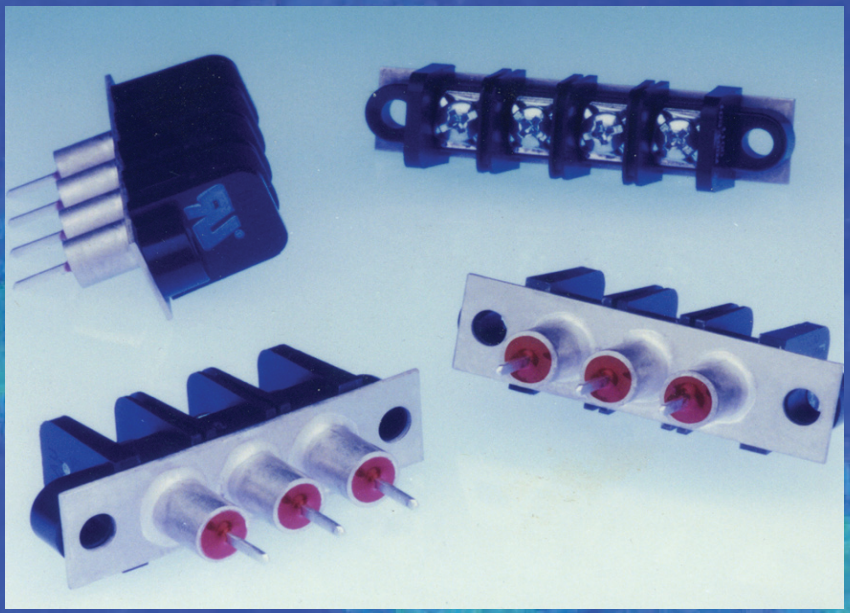

FILTERED TERMINAL BLOCKS

Visit Us at: www.tusonix.com

TUSONIX
A Subsidiary of CTS Electronic Components

The products listed in this catalog are only a few of the thousands of variations that TUSONIX produces. For custom applications, please contact the factory direct.

UL Recognized Filtered Terminal Blocks

Application

Recognized by UL, the TUSONIX Filtered Terminal Block is specifically designed to save time and money for EMI filtering applications.

By combining a filtering component with an industry standard terminal block, TUSONIX has created an effective barrier to EMI noise. TUSONIX' Filtered Terminal Blocks allow the engineer to eliminate EMI using an existing mechanical design concept.

TUSONIX' commitment to excellence and service allows for customization of the filtered terminal blocks to meet your specific EMC qualifications.

Backed by decades of ceramic component production experience, TUSONIX Filtered Terminal Blocks will meet or exceed your demanding application requirements.

Benefits

- Saves Labor and Space
- Consistent Panel Layout
- Solves EMI Problems
- Meets Specific Requirements

Features

- Filter Integral to Block
- Industry Standard Block
- Wide Range of Performance
- Customization

Catalog Index

Specifications ..... Pg. 2

Pi-Circuit Filtered Terminal Blocks ..... Pg. 3

Back Plane Terminal Blocks..... Pg. 4

C-Circuit Filtered Terminal Blocks ..... Pg. 5

Installation Recommendations ..... Pg. 6

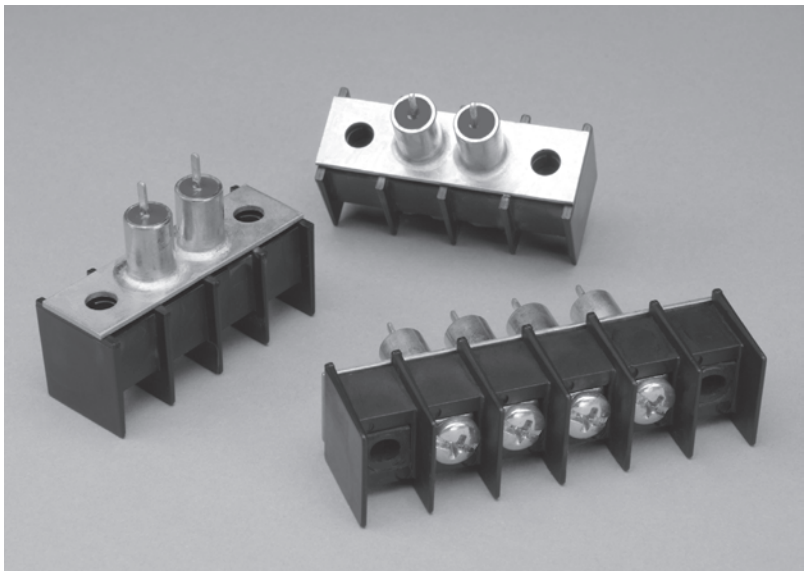

Filtered Terminal Blocks

Practical Applications

- Telecommunications
- Computer and Peripheral Equipment
- Industrial Process Control Equipment
- Power Supplies
- Office and Lab Equipment

The TUSONIX Terminal Blocks listed in this Catalog are Recognized to UL Standard 1283 for the EMI Filter and UL Standard 1059 for the Terminal Block.

7741 North Business Park Drive
Tucson, Arizona 85743
Ph: 520-744-0400 Fax: 520-744-6155
Website: www.tusonix.com E-mail: customer.service.us71@ctscorp.com

TUSONIX
A Subsidiary of CTS Electronic Components

Filtered Terminal Block Specifications

1.0 Scope

This specification describes the basic performance requirements of TUSONIX Filtered Terminal Blocks.

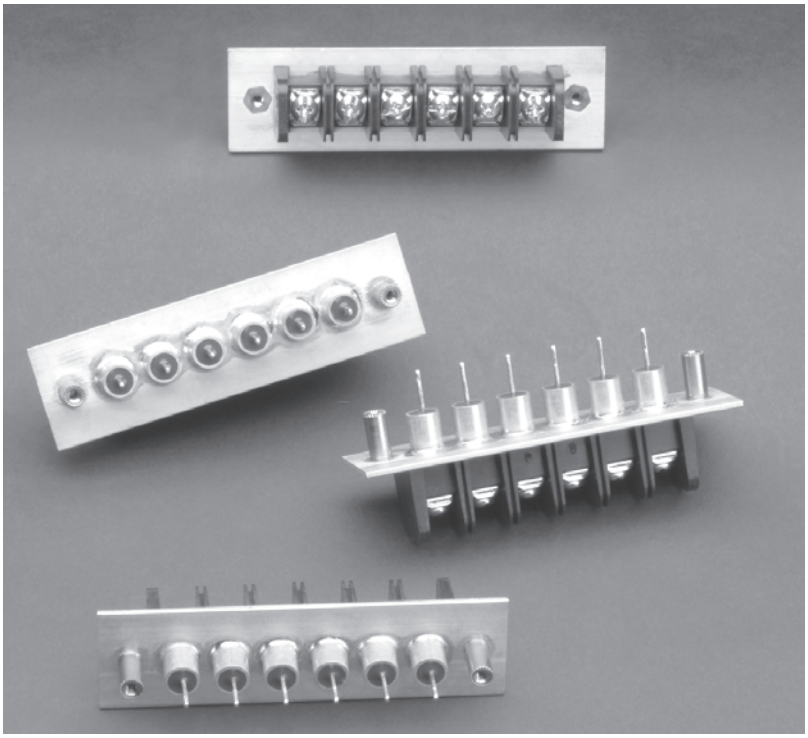

2.0 Capacitance

Measurement Conditions: Capacitance measured at 25°± 2°C, 50% max R.H. and Frequency of 1 KHz @ 1± 0.2VRMS.

3.0 Insertion Loss

3.1 Measurement Conditions: Insertion Loss values listed are measured in a 50W system at 25°C± 2°C under no-load conditions.

3.2 Insertion Loss: The Insertion Loss values listed are typical values for both 500 and 600 styles under indicated conditions.

3.3 Listed Insertion Loss data is a measurement of filter performance in a matched 50W system. It is highly recommended that filter performance be verified under actual circuit operation conditions.

4.0 Operating Conditions

Filters are designed to operate continuously at the voltage and current that is stated for each TUSONIX part number. If the operating ambient temperature is significantly higher than 25°C, the terminal blocks should be installed in equipment and tested under actual conditions to ensure that maximum temperatures are not exceeded.

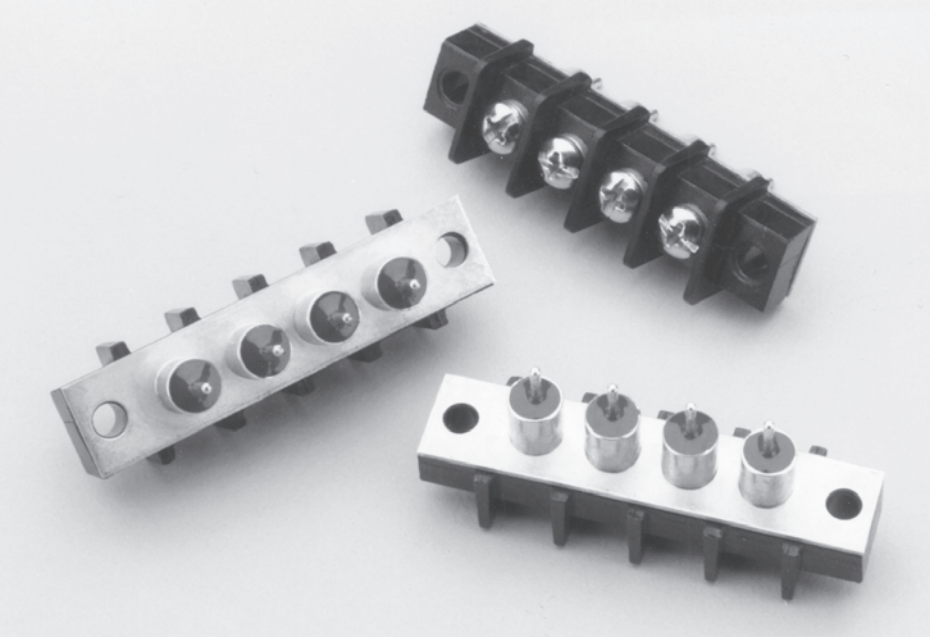

5.0 Dielectric Withstanding Voltage

Filters shall withstand the specified voltage applied between the screw terminal and ground plane for one minute. Surge current shall be limited to a maximum of 50mA.

6.0 Insulation Resistance

Measured at 25°C± 2°C with 100VDC and charging current limited to 50mA max. The IR, after two minutes maximum application of the test voltage, shall be a minimum of 10 GΩ.

The products listed in this catalog are only a few of the thousands of variations that TUSONIX produces. For custom applications, please contact the factory direct.

UL Recognized "Pi" Filtered Terminal Blocks

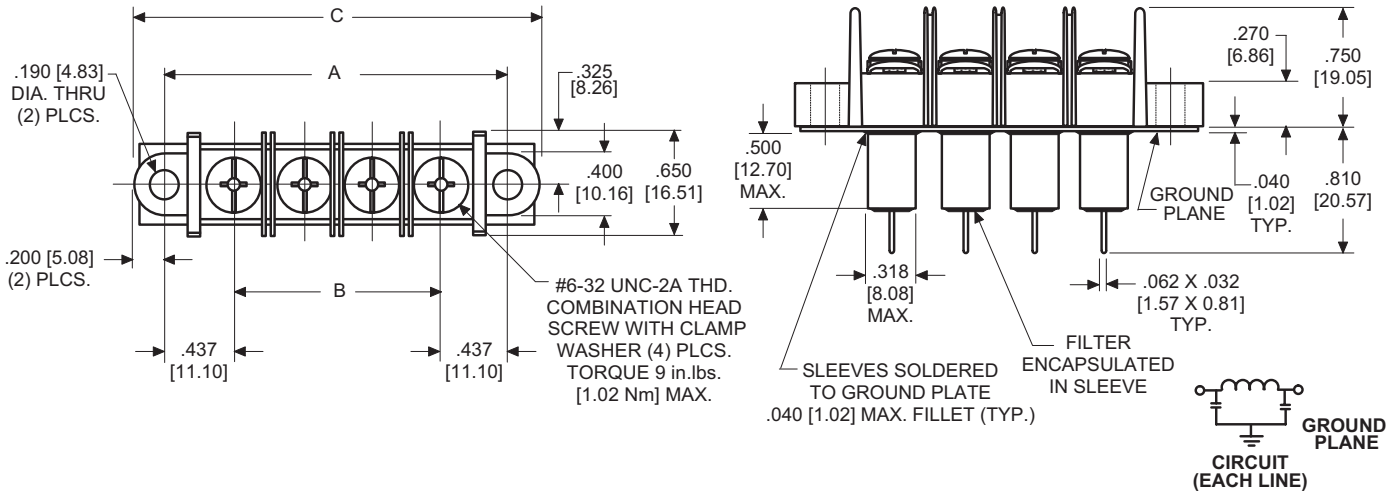

TUSONIX Part Number	Number of Terminals	Screw Size	A		B		C	
7602-501LF	2	#6-32	1.313	[33.35]	.437	[11.10]	1.710	[43.43]
7603-501LF	3	#6-32	1.750	[44.45]	.875	[22.23]	2.150	[54.61]
7604-501LF	4	#6-32	2.188	[55.58]	1.311	[33.30]	2.590	[65.79]
7605-501LF	5	#6-32	2.625	[66.68]	1.750	[44.45]	3.020	[76.71]
7606-501LF	6	#6-32	3.063	[77.80]	2.185	[55.50]	3.460	[87.88]
7607-501LF	7	#6-32	3.500	[88.90]	2.625	[66.68]	3.900	[99.06]
7608-501LF	8	#6-32	3.938	[100.03]	3.063	[77.80]	4.340	[110.24]
7609-501LF	9	#6-32	4.375	[111.13]	3.500	[88.90]	4.770	[121.16]
7610-501LF	10	#6-32	4.813	[122.25]	3.938	[100.03]	5.210	[132.33]

Mechanical Specifications

- Center Spacing: .437 [11.10]
- Wire Size: up to 12AWG, ∅.081[2.06]
- Molded Material: High Temp Thermoplastic (PBT), UL rated 94 V-0
- Block Mounting: Recommended mounting screw (#8 Pan Head) Torque 5in.lbs. [0.56 Nm] Max.
- Terminal: Brass, Tin-plated

UL Recognition

- EMI Filters recognized to UL Standard 1283
- Terminal Block recognized to UL Standard 1059
- Reference UL File Number E201344

Electrical Specifications

- Operating Temperature: -40°C to 105°C
- Working Voltages: ≤ 250 VAC *
- Capacitance: ≥ 2000pF
- Dielectric Withstanding Voltage: 1500VAC *
- Insulation Resistance: ≥ 10 GΩ
- Current Rating: 20A
- DC Resistance: ≤ 10 mΩ
- Typical Insertion Loss[dB], in 50 Ω Circuit

10 MHz	100 MHz	1 GHz	10 GHz
5dB	50dB	60dB	65dB

(For additional insertion loss values, please contact the factory directly.)

* AC Frequency 50/60Hz

7741 North Business Park Drive
Tucson, Arizona 85743
Ph: 520-744-0400 Fax: 520-744-6155
Website: www.tusonix.com E-mail: customer.service.us71@ctscorp.com

TUSONIX
A Subsidiary of CTS Electronic Components

"Pi" Back Plane Filtered Terminal Blocks

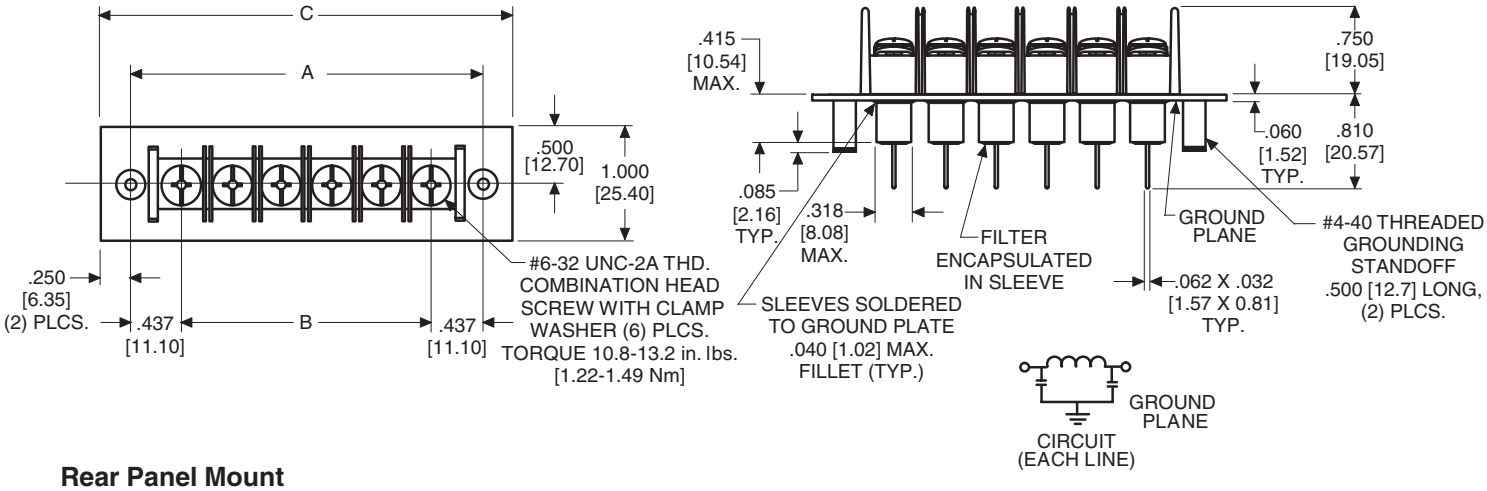

Rear Panel Mount

TUSONIX Part Number	Number of Terminals	Screw Size	A		B		C	
7602-551LF	2	#6-32	1.313	[33.35]	.437	[11.10]	1.813	[46.05]
7603-551LF	3	#6-32	1.750	[44.45]	.874	[22.20]	2.250	[57.15]
7604-551LF	4	#6-32	2.188	[55.58]	1.311	[33.30]	2.688	[68.28]
7605-551LF	5	#6-32	2.625	[66.68]	1.748	[44.40]	3.125	[72.38]
7606-551LF	6	#6-32	3.063	[77.80]	2.185	[55.50]	3.563	[90.50]
7607-551LF	7	#6-32	3.500	[88.90]	2.622	[66.60]	4.000	[101.60]
7608-551LF	8	#6-32	3.958	[100.03]	3.059	[77.70]	4.438	[112.73]
7609-551LF	9	#6-32	4.375	[111.13]	3.496	[88.80]	4.875	[123.83]
7610-551LF	10	#6-32	4.813	[122.25]	3.933	[99.90]	5.313	[134.95]

Mechanical Specifications

- Center Spacing: .437 [11.10]
- Wire Size: up to 12AWG, ∅.081[2.06]
- Molded Material: High Temp Thermo- plastic (PBT), UL rated 94 V-0
- Terminal: Brass, Tin-plated

UL Recognition

- EMI Filters recognized to UL Standard 1283
- Terminal Block recognized to UL Standard 1059
- Reference UL File Number E201344

Electrical Specifications

- Operating Temperature: -40°C to 105°C
- Working Voltages: ≤ 100 VDC
- Capacitance: 2500/5000pF
- Dielectric Withstand Voltage: 2121 VDC
- Insulation Resistance: ≥ 10 GΩ
- Current Rating: 20A
- DC Resistance: ≤ 10 mΩ
- Typical Insertion Loss [dB], in 50 Ω Circuit

10 MHz	100 MHz	1 GHz	10 GHz
5dB	50dB	60dB	65dB

(For additional insertion loss values, please contact the factory directly.)

The products listed in this catalog are only a few of the thousands of variations that TUSONIX produces. For custom applications, please contact the factory direct.

UL Recognized 30 AMP "C" Filtered Terminal

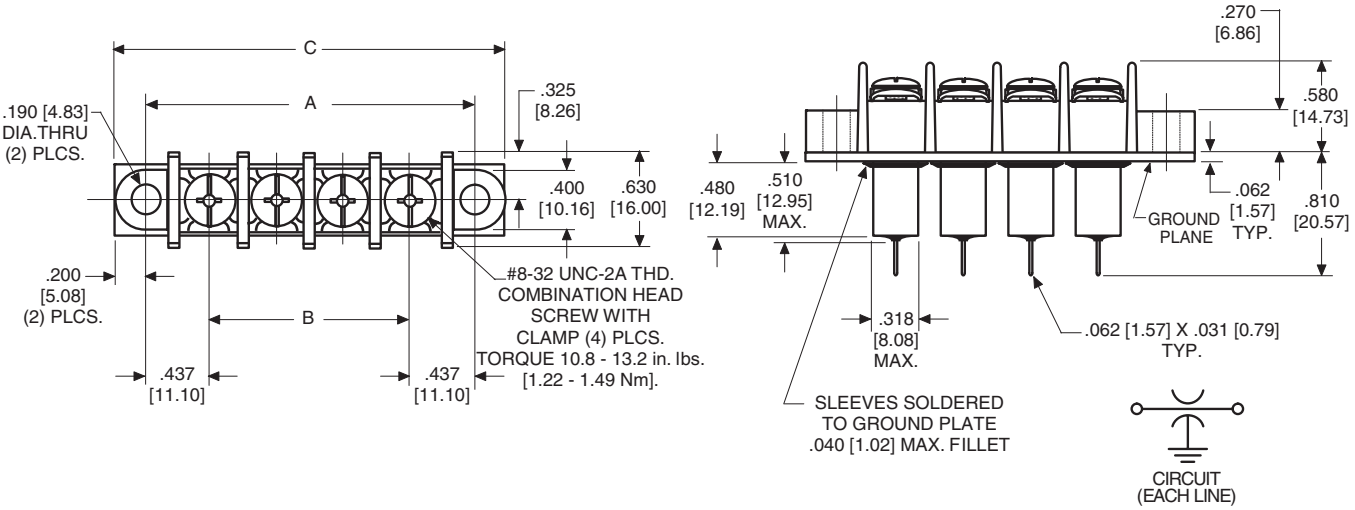

Please Note - Two screw sizes are available: The #6-32 (601) screw with combination head screw & clamp washer and the #8-32 (602) screw without clamp washer.

TUSONIX Part Number	Number of Terminals	Screw Size 602	A		B		C	
7602-602LF	2	#8-32	1.313	[33.35]	.437	[11.10]	1.710	[43.43]
7603-602LF	3	#8-32	1.750	[44.45]	.874	[22.20]	2.150	[54.61]
7604-602LF	4	#8-32	2.188	[55.58]	1.311	[33.30]	2.590	[65.79]
7605-602LF	5	#8-32	2.625	[66.68]	1.748	[44.40]	3.020	[76.71]
7606-602LF	6	#8-32	3.063	[77.80]	2.185	[55.50]	3.460	[87.88]
7607-602LF	7	#8-32	3.500	[88.90]	2.622	[66.60]	3.900	[99.06]
7608-602LF	8	#8-32	3.938	[100.03]	3.059	[77.70]	4.340	[110.24]
7609-602LF	9	#8-32	4.375	[111.13]	3.496	[88.80]	4.770	[121.16]
7610-602LF	10	#8-32	4.813	[122.25]	3.933	[99.90]	5.210	[132.33]

Mechanical Specifications

- Center Spacing: .437 [11.10]
- Wire Size: up to 10AWG, ∅.102 [2.59]
- Molded Material: High Temp Thermoplastic (PBT), UL rated 94 V-0.
- Block Mounting: Recommended mounting screw (#8 Pan Head) Torque 5in.lbs. [0.56 Nm] Max
- Terminal: Brass, Tin-plated

UL Recognition

- EMI Filters recognized to UL Standard 1283
- Terminal Block recognized to UL Standard 1059
- Reference UL File Number E201344

Electrical Specifications

- Operating Temperature: -40°C to 105°C
- Working Voltages: ≤ 150 VDC
- Capacitance: ≥15,000pF Minimum
- Dielectric Withstand Voltage: 2121VDC
- Insulation Resistance: ≥ 10,000 MΩ
- Current Rating: 30A, (30A rating requires 10 AWG wire and lugs)
- DC Resistance: ≤ 10 mΩ
- Typical Insertion Loss, in 50 Ω Circuit (dB):

10 MHz	100 MHz	1 GHz	10 GHz
28dB	45dB	70dB	70dB

(For additional Insertion loss values, contact the factory.)

7741 North Business Park Drive
Tucson, Arizona 85743
Ph: 520-744-0400 Fax: 520-744-6155
Website: www.tusonix.com E-mail: customer.service.us71@ctscorp.com

Product Installation Recommendations

Product Installation Recommendations

The components in this catalog are manufactured with ceramic dielectrics. To minimize possible damage to the components during installation, the recommendations below should be followed. For information concerning other installation requirements and/or component modifications, consult TUSONIX Customer Engineering at (520) 744-0400.

General Recommendations

Handling: Excessive force or direct impact to the component may result in breakage. Lead bending or cutting, if necessary, should be done with a support for the lead to prevent mechanical stress to the component. Components with required lead modifications are available from TUSONIX.

Lead Soldering: Use a temperature controlled soldering iron with SN60 or SN63 RMA Flux core wire. Maximum soldering temperature to be 500°F(260°C) with a dwell time of 3 seconds maximum. The use of a heat sink between the component body and the solder joint is highly recommended.

Flux Removal: Optimum flux removal can be achieved by vapor degreasing the components immediately after the soldering operation. Total immersion of the components is not recommended.

TUSONIX on-line www.tusonix.com

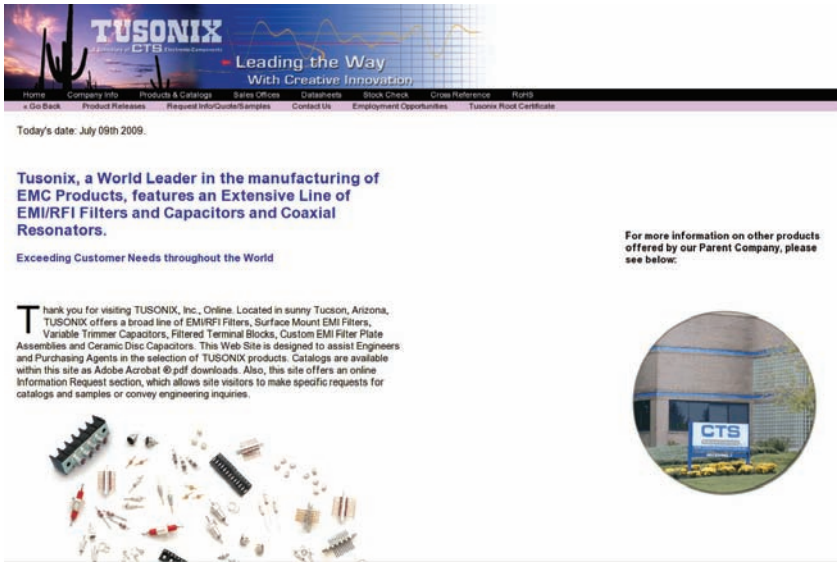

The TUSONIX Web site provides visitors with a wide range of product and ordering information.

At **www.tusonix.com**, customers can download catalogs & part data sheets, check stock and use the cross reference feature, as well as view or link to Sales Offices, International Agents and Distributors.

An on-line request form allows customers to immediately specify product requirements and request additional product information on the spot.

TUSONIX

Versatility in reliable electronic components

EMI Filters and Filter Capacitors

Custom Component Assemblies

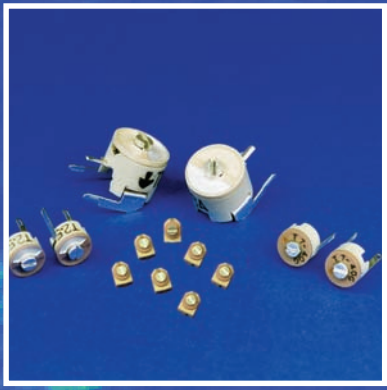

Ceramic Trimmer Capacitors

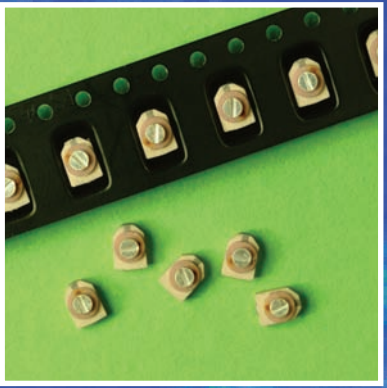

Surface Mount Trimmer Capacitors

Miniature EMI Filters

Coaxial Ceramic Resonators

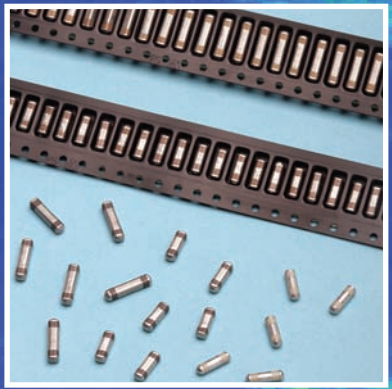

Surface Mount EMI Filters

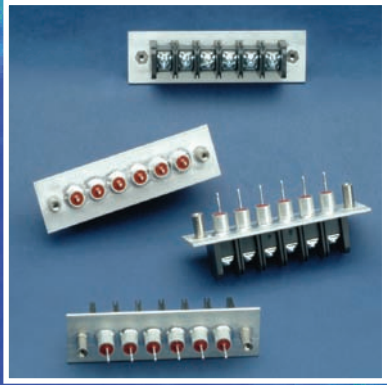

Filtered Terminal Blocks

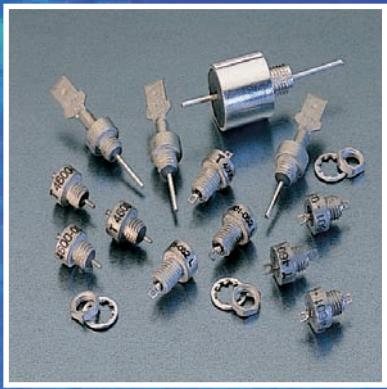

Coaxial Broadband Filters

TUSONIX

7741 North Business Park Drive
Tucson, Arizona 85743
520-744-0400 FAX: 520-744-6155
E-mail: customer.service.us71@ctscorp.com
Website: www.tusonix.com

PRINTED IN USA

0312

Мы молодая и активно развивающаяся компания в области поставок электронных компонентов. Мы поставляем электронные компоненты отечественного и импортного производства напрямую от производителей и с крупнейших складов мира.

Благодаря сотрудничеству с мировыми поставщиками мы осуществляем комплексные и плановые поставки широчайшего спектра электронных компонентов.

Собственная эффективная логистика и склад в обеспечивает надежную поставку продукции в точно указанные сроки по всей России.

Мы осуществляем техническую поддержку нашим клиентам и предпродажную проверку качества продукции. На все поставляемые продукты мы предоставляем гарантию .

Осуществляем поставки продукции под контролем ВП МО РФ на предприятия военно-промышленного комплекса России , а также работаем в рамках 275 ФЗ с открытием отдельных счетов в уполномоченном банке. Система менеджмента качества компании соответствует требованиям ГОСТ ISO 9001.

Минимальные сроки поставки, гибкие цены, неограниченный ассортимент и индивидуальный подход к клиентам являются основой для выстраивания долгосрочного и эффективного сотрудничества с предприятиями радиоэлектронной промышленности, предприятиями ВПК и научно-исследовательскими институтами России.

С нами вы становитесь еще успешнее!

Наши контакты:

Телефон: +7 812 627 14 35

Электронная почта: sales@st-electron.ru

Адрес: 198099, Санкт-Петербург, Промышленная ул, дом № 19, литера Н, помещение 100-Н Офис 331