TSC1021

High-side current sense amplifier

Datasheet - production data

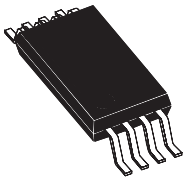

TSSOP8

Related products

- See TSC103 for higher common-mode operating range (2.9 V to 70 V)

Applications

- Automotive current monitoring
- Notebook computers
- Server power supplies
- Telecom equipment
- Industrial SMPS
- Current sharing
- LED current measurement

Features

- Wide common-mode operating range independent of supply: 2.8 V to 30 V
- Wide common-mode survival range: -32 V to 60 V (reversed battery and load-dump conditions)
- Maximum input offset voltage:
  - ±1.5 mV for T_{amb} = 25 °C
  - ±2.3 mV for -40 °C < T_{amb} < 125 °C
- Maximum total output voltage error:
  - ±1.5 % for T_{amb} = 25 °C
  - ±2.5 % for -40 °C < T_{amb} < 125 °C
- Maximum variation over temperature:
  - dV_{os}/dT = 8 µV/°C
  - dV_{out}/dT = 100 ppm/°C
- Low current consumption: I_{CC} max = 300 µA
- -40 °C to 125 °C operating temperature range
- Internally fixed gain: 20 V/V, 50 V/V
- EMI filtering

Description

The TSC1021 measures a small differential voltage on a high-side shunt resistor and translates it into a ground-referenced output voltage.

The TSC1021 has been specifically designed for automotive conditions: load-dump protection up to 60 V, reverse-battery protection up to -32 V, ESD protection up to 4 kV and internal filtering for EMI performance.

Input common-mode and power supply voltages are independent: the common-mode voltage can range from 2.8 to 30 V in operating conditions and up to 60 V in absolute maximum ratings while the TSC1021 can be supplied by a 5 V independent supply line.

The TSC1021 is housed in a tiny TSSOP8 package and integrates a buffer that provides low impedance output to ease interfacing and avoid accuracy losses. The overall device current consumption is lower than 300 µA.

This is information on a product in full production. www.st.com

Contents

1 Application diagram 3

2 Pin configuration 4

3 Absolute maximum ratings and operating conditions 5

4 Electrical characteristics 6

5 Electrical characteristics curves: current sense amplifier 8

6 Parameter definitions 11

6.1 Common mode rejection ratio (CMR) 11

6.2 Supply voltage rejection ratio (SVR) 11

6.3 Gain (Av) and input offset voltage (Vos) 11

6.4 Output voltage drift versus temperature 11

6.5 Output voltage accuracy 12

7 Package information 13

7.1 TSSOP8 package information 14

8 Ordering information 15

9 Revision history 16

1 Application diagram

The TSC1021 high-side current-sense amplifier features a 2.8 V to 30 V input common-mode range that is independent of the supply voltage. The main advantage of this feature is that it allows high-side current sensing at voltages much greater than the supply voltage (V_{CC}).

Figure 1: Application schematic: high-line current sensing

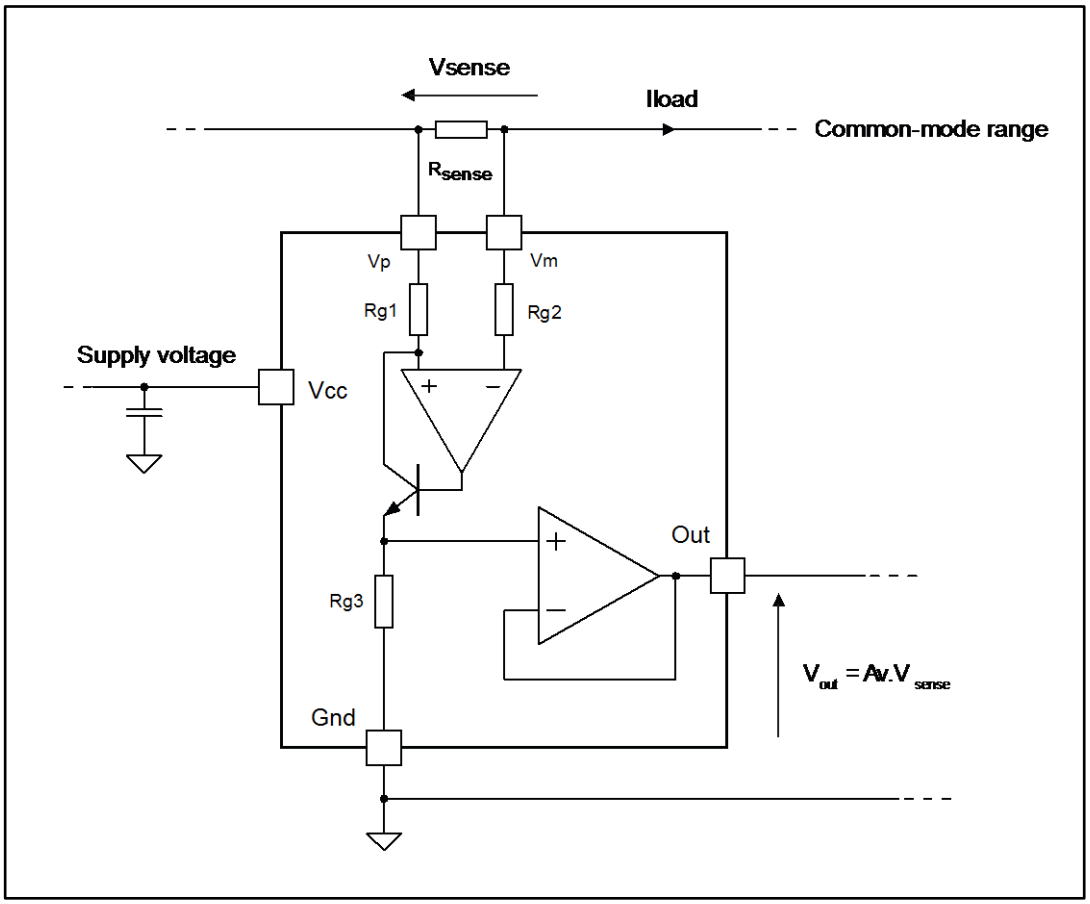

2 Pin configuration

Figure 2: Pin connections (top view)

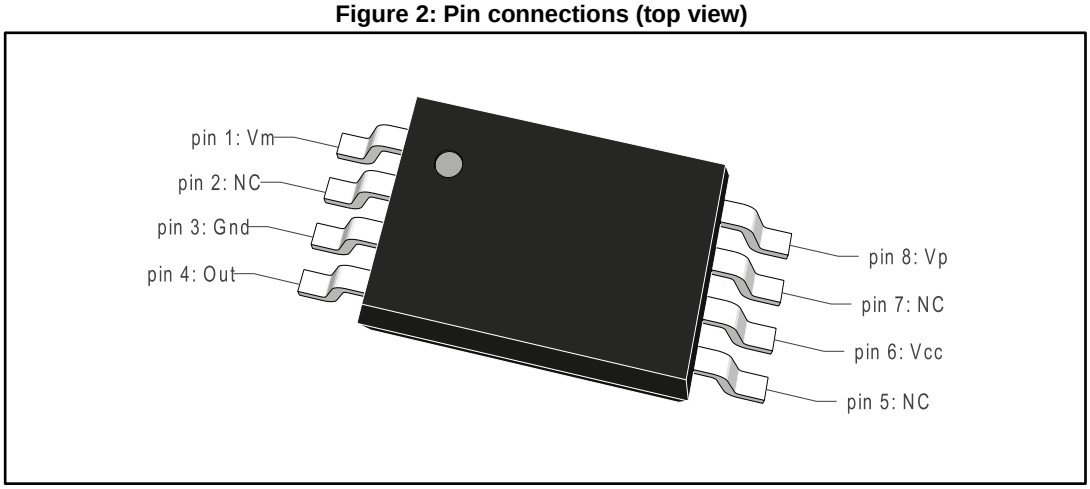

Table 1: "Pin description" describes the function of each pin. Their position is shown in the illustration on the cover page and in *Figure 2: "Pin connections (top view)"* above.

Table 1: Pin description

Pin number	Symbol	Type	Function
1	V_m	Analog input	Connection for the external sense resistor. The measured current exits the shunt on the $\overline{V}_m$ side.
3	Gnd	Power supply	Ground line
4	Out	Analog output	Buffered output of the current sensing amplifier
6	V_{CC}	Power supply	Positive power supply line
8	V_p	Analog input	Connection for the external sense resistor. The measured current enters the shunt on the $\overline{V}_p$ side.

3 Absolute maximum ratings and operating conditions

Table 2: Absolute maximum ratings

Symbol	Parameter	Value	Unit
V_{id}	Input pins differential voltage (V_p-V_m)	±20	V
V_i	Current sensing input pin voltages (V_p and V_m) (1)	-32 to 60	
V_1	Voltage for Vcc, Out pins (1)	-0.3 to 7	
T_{stg}	Storage temperature	-65 to 150	°C
T_j	Maximum junction temperature	150	
R_{thja}	TSSOP8 thermal resistance junction to ambient	120	°C/Ω
ESD	HBM: human body model for V_p and V_m pins (2)	4	kV
	HBM: human body model for all other pins (2)	2	
	MM: machine model (3)	250	V
	CDM: charged device model (4)	1.5	kV

Notes:

(1)Voltage values are measured with respect to the GND pin.

(2)Human body model: a 100 pF capacitor is charged to the specified voltage, then discharged through a 1.5 kΩ resistor between two pins of the device. This is done for all couples of connected pin combinations while the other pins are floating.

(3)Machine model: a 200 pF capacitor is charged to the specified voltage, then discharged directly between two pins of the device with no external series resistor (internal resistor < 5 Ω). This is done for all couples of connected pin combinations while the other pins are floating.

(4)Charged device model: all pins and package are charged together to the specified voltage and then discharged directly to ground.

Table 3: Operating conditions

Symbol	Parameter	Value	Unit
V_{CC}	DC supply voltage from T_{min} to T_{max}	3.5 to 5.5	V
T_{oper}	Operational temperature range (T_{min} to T_{max})	-40 to 125	°C
V_{icm}	Common-mode voltage range (V_m and V_p pin voltage)	2.8 to 30	V

4 Electrical characteristics

The electrical characteristics given in the following tables are measured under the following test conditions unless otherwise specified: T_{amb} = 25 °C, V_{CC} = 5 V, V_{sense} = V_p-V_m = 50 mV, V_m = 12 V, no load on Out, all gain configurations.

Table 4: Supply

Symbol	Parameter	Test conditions	Min.	Typ.	Max.	Unit
I_{CC}	Total supply current	V_{sense} = 0 V, -40 °C < T_{amb} < 125 °C	—	—	300	µA
I_{CC1}	Total supply current	V_{sense} = 50 mV, -40 °C < T_{amb} < 125 °C			450	

Table 5: Electrical performances

Symbol	Parameter	Test conditions	Min.	Typ.	Max.	Unit
DC CMR	DC common-mode rejection, variation of V_{out} versus V_m referred to input (1)	2.8 V < V_m < 30 V, -40 °C < T_{amb} < 125 °C	90	105		dB
AC CMR	AC common mode rejection, variation of V_{out} versus V_m referred to input (peak-to-peak voltage variation)	2.8 V < V_m < 30 V, DC to 1 kHz sine wave		75		
SVR	Supply voltage rejection, variation of V_{out} versus V_{CC} (1)	3.5 V < V_{CC} < 5.5 V, -40 °C< T_{amb} < 125°C	80	95		
V_{os}	Input offset voltage (1)	2.8 V < V_m < 30 V, T_{amb} = 25 °C			±1.5	mV
		2.8 V < V_m < 30 V, -40 °C < T_{amb} < 125 °C			±2.3	
dV_{os}/dT	Input offset drift vs. T	-40 °C< T_{amb} < 125 °C			8	µV/°C
dV_{out}/dT	Output voltage drift vs. T	-40 °C< T_{amb} < 125 °C			100	ppm/°C
I_{Ik}	Input leakage current	V_{CC} = 0 V, -40 °C < T_{amb} < 125 °C			1	µA
I_{ib}	Input bias current	V_{sense} = 0 V, -40 °C < T_{amb} < 125 °C			7	
Av	Gain, (variation of V_{out} versus V_{sense})	TSC1021A		20		V/V
		TSC1021B		50		
ΔV_{out}	Total output voltage accuracy (2)	V_{sense} = 50 mV, T_{amb} = 25 °C			±1.5	%
		V_{sense} = 50 mV, T_{min} < T_{amb} < T_{max}			±2.5	
		V_{sense} = 100 mV, T_{amb} = 25 °C			±1.5	
		V_{sense} = 100 mV, T_{min} < T_{amb} < T_{max}			±2.5	
		V_{sense} = 20 mV, T_{amb} = 25 °C			±7	
		V_{sense} = 20 mV, T_{min} < T_{amb} < T_{max}			±9	
		V_{sense} = 10 mV, T_{amb} = 25 °C			±12	
		V_{sense} = 10 mV, T_{min} < T_{amb} < T_{max}			±15	
$\Delta V_{out}/\Delta I_{out}$	Output stage load regulation	-5 mA < I_{out} <5 mA, I_{out} sink or source current		±0.4	±2	mV/mA

Symbol	Parameter	Test conditions	Min.	Typ.	Max.	Unit
V_{oh}	Out high level saturation voltage, $V_{oh}=V_{cc}-V_{out}$	V_{sense} = 1 V, I_{out} = 1 mA, T_{amb} = 25 °C		90	135	mV
		V_{sense} = 1 V, I_{out} = 1 mA, -40 °C< T_{amb} < 125 °C			185	
V_{ol}	Out low level saturation voltage	V_{sense} = -1 V, I_{out} = 1 mA, T_{amb} = 25 °C		80	125	
		V_{sense} = -1 V, I_{out} = 1 mA, -40 °C< T_{amb} < 125 °C			165	

Notes:

(1)See *Section 6: "Parameter definitions"*.

(2)Output voltage accuracy is the difference with the expected theoretical output voltage $V_{out\text{-}th}$ = Av x V_{sense}. See *Section 6: "Parameter definitions"* for a more detailed definition.

Table 6: Dynamic performances

Symbol	Parameter	Test conditions	Min.	Typ.	Max.	Unit
ts	V_{out} settling to 1 % final value	V_{sense} = 10 mV to 100 mV, C_{load} = 47 pF		7		µs
SR	Slew rate	V_{sense} = 10 mV to 100 mV	0.3	0.45		V/µs
BW	3 dB bandwidth	C_{load} = 47 pF		800		kHz
e_N	Equivalent input noise voltage	f = 1 kHz		50		nV/√ Hz

5 Electrical characteristics curves: current sense amplifier

Unless otherwise specified, the test conditions for the following curves are:

- Tamb = 25 °C, V_{CC} = 5 V, Vsense = Vp - Vm = 50 mV, Vm = 12 V.
- No load on the Out pin.

Figure 3: Output voltage vs. Vsense

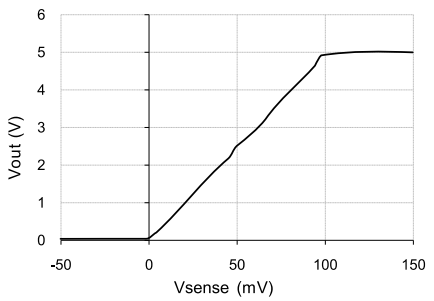

Figure 4: Output voltage accuracy vs. Vsense

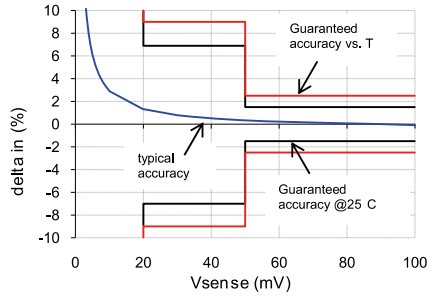

Figure 5: Supply current vs. supply voltage

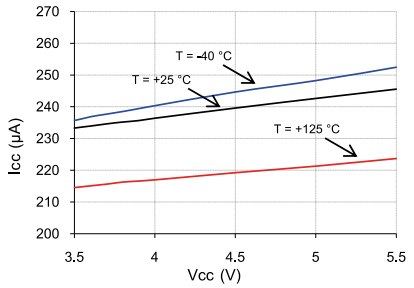

Figure 6: Supply current vs. Vsense

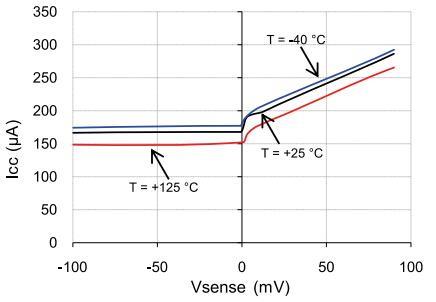

Figure 7: Vp pin input current vs. Vsense

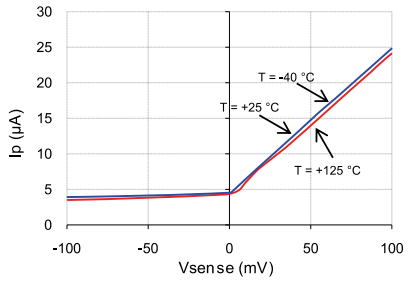

Figure 8: Vn pin input current vs. Vsense

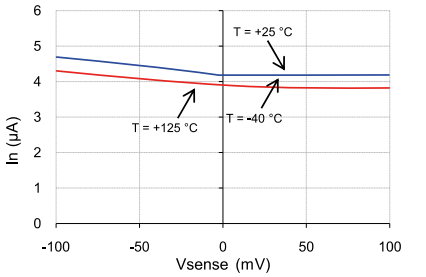

Figure 9: Output stage low-state saturation voltage vs. output current (Vsense = -1 V)

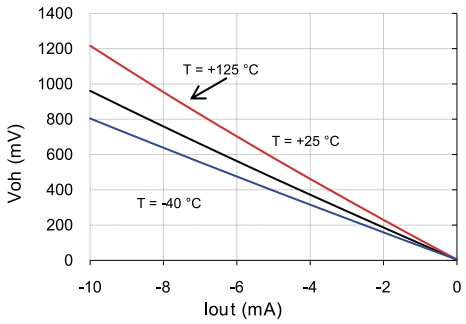

Figure 10: Output stage high-state saturation voltage vs. output current (Vsense = 1 V)

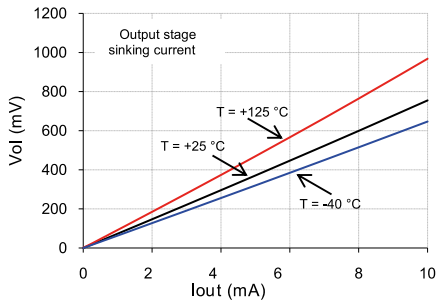

Figure 11: Output stage load regulation

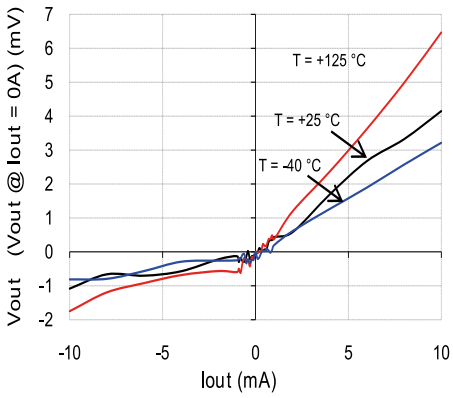

Figure 12: Step response

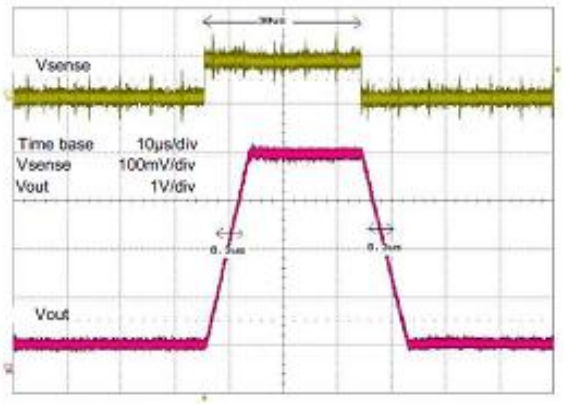

Figure 13: Bode diagram

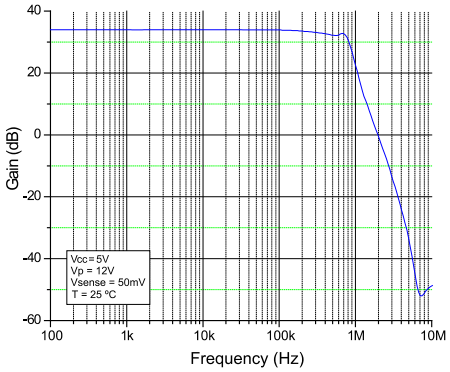

Figure 14: Power supply rejection ratio

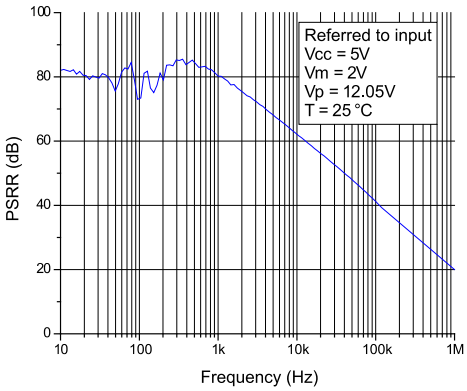

Figure 15: Noise level

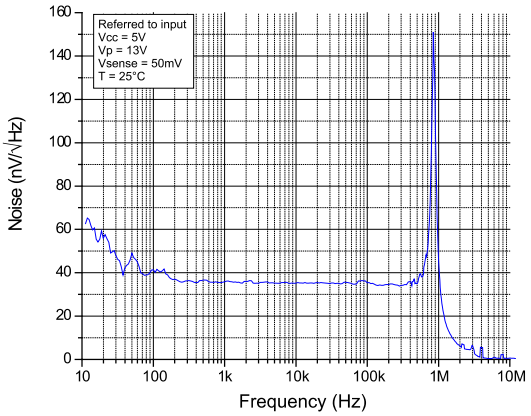

6 Parameter definitions

6.1 Common mode rejection ratio (CMR)

The common-mode rejection ratio (CMR) measures the ability of the current-sensing amplifier to reject any DC voltage applied on both inputs V_p and V_m. The CMR is referred back to the input so that its effect can be compared with the applied differential signal. The CMR is defined by the formula:

$$CMR = -20 \cdot \log \frac{\Delta V_{out}}{\Delta V_{icm} \cdot Av}$$

6.2 Supply voltage rejection ratio (SVR)

The supply-voltage rejection ratio (SVR) measures the ability of the current-sensing amplifier to reject any variation of the supply voltage V_{CC}. The SVR is referred back to the input so that its effect can be compared with the applied differential signal. The SVR is defined by the formula:

$$SVR = -20 \cdot \log \frac{\Delta V_{out}}{\Delta V_{cc} \cdot Av}$$

6.3 Gain (Av) and input offset voltage (Vos)

The input offset voltage is defined as the intersection between the linear regression of the V_{out} vs. the V_{sense} curve with the X-axis. If V_{out1} is the output voltage with $V_{sense} = V_{sense1} = 50$ mV, and V_{out2} is the output voltage with $V_{sense} = V_{sense2} = 5$ mV, then V_{os} can be calculated with the following formula.

$$V_{os} = V_{sense1} - \frac{V_{sense1} - V_{sense2}}{V_{out1} - V_{out2}} \cdot V_{out1}$$

6.4 Output voltage drift versus temperature

The output voltage drift versus temperature is defined as the maximum variation of V_{out} with respect to its value at 25 °C, over the temperature range. It is calculated as follows:

$$\frac{\Delta V_{out}}{\Delta T} = \max \left| \frac{V_{out}(Tamb) - V_{out}(25°C)}{Tamb - 25°C} \right|$$

with $T_{min} < T_{amb} < T_{max}$.

6.5 Output voltage accuracy

The output voltage accuracy is the difference between the actual output voltage and the theoretical output voltage. Ideally, the current sensing output voltage should be equal to the input differential voltage multiplied by the theoretical gain, as in the following formula.

$$V_{out\text{-}th} = Av \cdot V_{sense}$$

The actual value is very slightly different, mainly due to the effects of:

- the input offset voltage V_{os}
- the non-linearity
- the voltage saturation of V_{OL} and V_{OH}

The output voltage accuracy, expressed as a percentage, can be calculated with the following formula.

$$\Delta V_{out} = \frac{abs(V_{out} - (Av \cdot V_{sense}))}{Av \cdot V_{sense}}$$

With Av = 20 V/V for TSC1021A and Av = 50 V/V for TSC1021B.

7 Package information

In order to meet environmental requirements, ST offers these devices in different grades of ECOPACK® packages, depending on their level of environmental compliance. ECOPACK® specifications, grade definitions and product status are available at: ***www.st.com***. ECOPACK® is an ST trademark.

7.1 TSSOP8 package information

Figure 16: TSSOP8 package outline

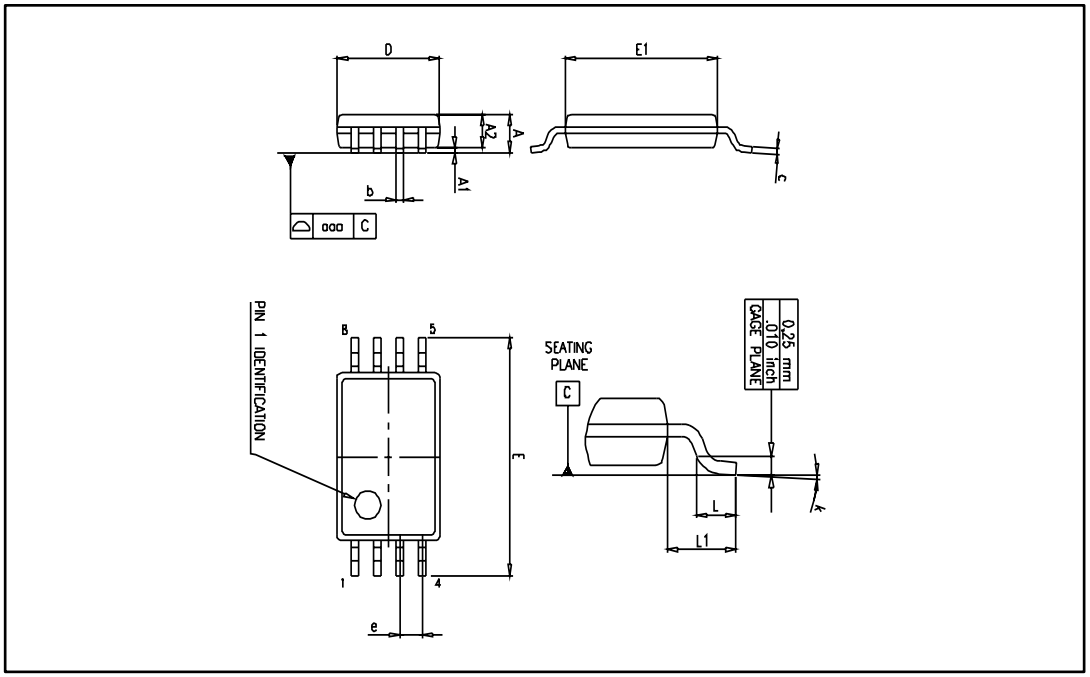

Table 7: TSSOP8 mechanical data

Ref.	Dimensions					
	Millimeters			Inches		
	Min.	Typ.	Max.	Min.	Typ.	Max.
A			1.2			0.047
A1	0.05		0.15	0.002		0.006
A2	0.80	1.00	1.05	0.031	0.039	0.041
b	0.19		0.30	0.007		0.012
c	0.09		0.20	0.004		0.008
D	2.90	3.00	3.10	0.114	0.118	0.122
E	6.20	6.40	6.60	0.244	0.252	0.260
E1	4.30	4.40	4.50	0.169	0.173	0.177
e		0.65			0.0256	
k	0°		8°	0°		8°
L	0.45	0.60	0.75	0.018	0.024	0.030
L1		1			0.039	
aaa		0.1			0.004	

8 Ordering information

Table 8: Order codes

Part number	Temperature range	Package	Packaging	Marking	Gain
TSC1021AIPT	-40 °C to 125 °C	TSSOP8	Tape and reel	O21AI	20
TSC1021BIPT				O21BI	50
TSC1021AIYPT	-40 °C to 125 °C automotive grade (1)			O21AY	20
TSC1021BIYPT				O21BY	50

Notes:

(1)Qualified and characterized according to AEC Q100 and Q003 or equivalent, advanced screening according to AEC Q001 & Q002 or equivalent.

9 Revision history

Table 9: Document revision history

Date	Revision	Changes
23-Sep-2010	1	Initial release
26-Feb-2014	2	Added Section 5: "Electrical characteristics curves: current sense amplifier". Updated footnote 1 of Table 8: "Order codes"
18-Aug-2014	3	Added Related products Replaced Figure 2: Pin connections (top view) Table 5: Electrical performances: corrected several erroneous symbols. Table 8: Order codes: updated “Marking”, updated footnote 1
06-Nov-2015	4	*Table 2: "Absolute maximum ratings"*: updated second "HBM" parameter. *Table 5: "Electrical performances"*: updated unit of V_{os} parameter from µV to mV. *Table 7: "TSSOP8 mechanical data"*: updated parameter "aaa"

IMPORTANT NOTICE – PLEASE READ CAREFULLY

STMicroelectronics NV and its subsidiaries ("ST") reserve the right to make changes, corrections, enhancements, modifications, and improvements to ST products and/or to this document at any time without notice. Purchasers should obtain the latest relevant information on ST products before placing orders. ST products are sold pursuant to ST's terms and conditions of sale in place at the time of order acknowledgement.

Purchasers are solely responsible for the choice, selection, and use of ST products and ST assumes no liability for application assistance or the design of Purchasers' products.

No license, express or implied, to any intellectual property right is granted by ST herein.

Resale of ST products with provisions different from the information set forth herein shall void any warranty granted by ST for such product.

ST and the ST logo are trademarks of ST. All other product or service names are the property of their respective owners.

Information in this document supersedes and replaces information previously supplied in any prior versions of this document.

© 2015 STMicroelectronics – All rights reserved

Мы молодая и активно развивающаяся компания в области поставок электронных компонентов. Мы поставляем электронные компоненты отечественного и импортного производства напрямую от производителей и с крупнейших складов мира.

Благодаря сотрудничеству с мировыми поставщиками мы осуществляем комплексные и плановые поставки широчайшего спектра электронных компонентов.

Собственная эффективная логистика и склад в обеспечивает надежную поставку продукции в точно указанные сроки по всей России.

Мы осуществляем техническую поддержку нашим клиентам и предпродажную проверку качества продукции. На все поставляемые продукты мы предоставляем гарантию .

Осуществляем поставки продукции под контролем ВП МО РФ на предприятия военно-промышленного комплекса России , а также работаем в рамках 275 ФЗ с открытием отдельных счетов в уполномоченном банке. Система менеджмента качества компании соответствует требованиям ГОСТ ISO 9001.

Минимальные сроки поставки, гибкие цены, неограниченный ассортимент и индивидуальный подход к клиентам являются основой для выстраивания долгосрочного и эффективного сотрудничества с предприятиями радиоэлектронной промышленности, предприятиями ВПК и научно-исследовательскими институтами России.

С нами вы становитесь еще успешнее!

Наши контакты:

Телефон: +7 812 627 14 35

Электронная почта: sales@st-electron.ru

Адрес: 198099, Санкт-Петербург, Промышленная ул, дом № 19, литера Н, помещение 100-Н Офис 331