Si53102-A1/A2/A3 Data Sheet

PCI-Express Gen 1, Gen 2, Gen 3, and Gen 4 1:2 Fan-out Clock Buffer

Si53102-A1/A2/A3 is a family of high-performance 1:2 PCIe fan output buffers. This low-additive-jitter clock buffer family is compliant to PCIe Gen 1, Gen 2, Gen 3, and Gen 4 specifications. The ultra-small footprint (1.4x1.6 mm) and industry-leading low power consumption make the Si53102-A1/A2/A3 the ideal clock solution for consumer and embedded applications. Measuring PCIe clock jitter is quick and easy with the Silicon Labs PCIe Clock Jitter Tool. Download it for free at www.silabs.com/pcie-learningcenter.

Applications

- Network Attached Storage
- Multi-function Printer
- Wireless Access Point
- Server/Storage

KEY FEATURES

- PCI-Express Gen 1, Gen 2, Gen 3, and Gen 4 common clock compliant
- Two low-power PCIe clock outputs
- Supports Serial-ATA (SATA) at 100 MHz
- No termination resistors required for differential clocks
- 2.5 V or 3.3 V Power supply
- Spread Spectrum Tolerant
- Extended Temperature Range
  - –40 to 85 °C
- Small package 8-pin TDFN (1.4 x 1.6 mm)
- For PCIe Gen 1: Si53102-A1
- For PCIe Gen 2: Si53102-A2
- For PCIe Gen 3/4: Si53102-A3

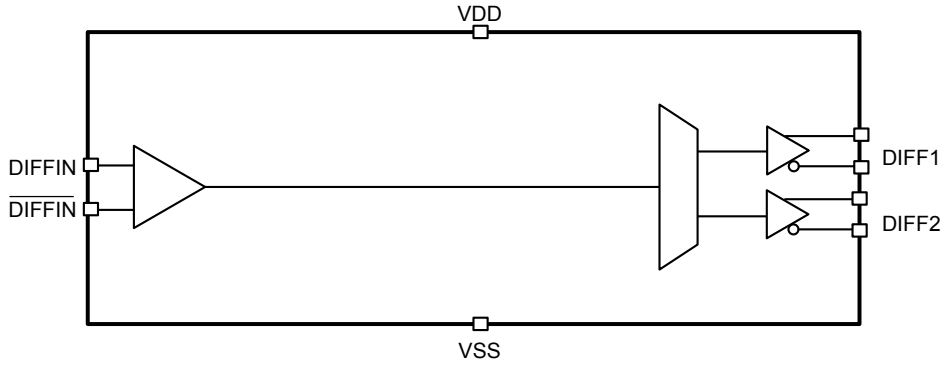

1. Ordering Guide

Table 1.1. Ordering Guide

Part Number	Package Type	Temperature
Si53102-A1-GM	8-pin TDFN	Extended, –40 to 85 °C
Si53102-A1-GMR	8-pin TDFN—Tape and Reel	Extended, –40 to 85 °C
Si53102-A2-GM	8-pin TDFN	Extended, –40 to 85 °C
Si53102-A2-GMR	8-pin TDFN—Tape and Reel	Extended, –40 to 85 °C
Si53102-A3-GM	8-pin TDFN	Extended, –40 to 85 °C
Si53102-A3-GMR	8-pin TDFN—Tape and Reel	Extended, –40 to 85 °C

Table of Contents

1. Ordering Guide . . . 2

2. Electrical Specifications . . . 4

3. Test and Measurement Setup . . . 7

4. Recommended Design Guideline . . . 9

5. Pin Descriptions . . . 10

6. Package Outline . . . 11

7. Land Pattern . . . 13

8. Revision History . . . 14

8.1 Revision 1.0 . . . 14

8.2 Revision 1.1 . . . 14

8.3 Revision 1.2 . . . 14

8.4 Revision 1.3 . . . 14

8.5 Revision 1.4 . . . 14

2. Electrical Specifications

Table 2.1. Recommended Operating Conditions

Parameter	Symbol	Test Condition	Min	Typ	Max	Unit
Supply Voltage (3.3 V Supply)	V_{DD}	3.3 V ± 10%	2.97	3.3	3.63	V
Supply Voltage (2.5 V Supply)	V_{DD}	2.5 V ± 10%	2.25	2.5	2.75	V

Table 2.2. DC Electrical Specifications

Parameter	Symbol	Test Condition	Min	Typ	Max	Unit
Operating Voltage (V_{DD} = 3.3 V)	V_{DD}	3.3 V ± 10%	2.97	3.30	3.63	V
Operating Voltage (V_{DD} = 2.5 V)	V_{DD}	2.5 V ± 10%	2.25	2.5	2.75	V
Operating Supply Current	I_{DD}	Full Active	—	—	15	mA
Input Pin Capacitance	C_{IN}	Input Pin Capacitance	—	3	5	pF
Output Pin Capacitance	C_{OUT}	Output Pin Capacitance	—	—	5	pF

Table 2.3. AC Electrical Specifications[1, 2, 3]

Parameter	Symbol	Condition	Min	Typ	Max	Unit
DIFFIN at 0.7 V						
Input frequency	Fin		10	100	175	MHz
DIFFIN and DIFFINb Rising/Falling Slew Rate	T_R / T_F	Single ended measurement: V_{OL} = 0.175 to V_{OH} = 0.525 V (Averaged)	0.6	—	4	V/ns
Differential Input High Voltage	V_{IH}		150	—	—	mV
Differential Input Low Voltage	V_{IL}		—	—	–150	mV
Crossing Point Voltage at 0.7 V Swing	V_{OX}	Single-ended measurement	250	—	550	mV
Vcross Variation Over All edges	ΔV_{OX}	Single-ended measurement	—	—	140	mV
Differential Ringback Voltage	V_{RB}		–100	—	100	mV
Time before Ringback Allowed	T_{STABLE}		500	—	—	ps
Absolute Maximum Input Voltage	V_{MAX}			—	1.15	V
Absolute Minimum Input Voltage	V_{MIN}		–0.3	—	—	V

Parameter	Symbol	Condition	Min	Typ	Max	Unit
DIFFIN and DIFFINb Duty Cycle	T_{DC}	Measured at crossing point VOX	45	—	55	%
Rise/Fall Matching	T_{RFM}	Determined as a fraction of 2 x (TR – TF)/(TR + TF)	—	—	20	%
DIFF Clocks						
Duty Cycle	T_{DC}	Measured at crossing point VOX	45	—	55	%
Output Skew	T_{SKEW}	Measured at 0 V differential	—	—	100	ps
Frequency Accuracy	F_{ACC}	All output clocks	—	—	100	ppm
Slew Rate	$t_{r/f2}$	Measured differentially from ±150 mV	0.6	—	4.0	V/ns
PCIe Gen 1 Pk-Pk Additive Jitter	$Pk\text{-}Pk_{GEN1}$	PCIe Gen 1 Si53102-A1	—	—	10	ps
PCIe Gen 2 Additive Phase Jitter	RMS_{GEN2}	10 kHz < F < 1.5 MHz, Si53102-A2	—	—	0.50	ps
PCIe Gen 2 Additive Phase Jitter	RMS_{GEN2}	1.5 MHz < F < Nyquist, Si53102-A2	—	—	0.50	ps
PCIe Gen 3 Additive Phase Jitter	RMS_{GEN3}	Includes PLL BW 2–4 MHz, CDR = 10 MHz, Si53102-A3, VDD=3.3 V	—	—	0.22	ps
		Includes PLL BW 2–4 MHz, CDR = 10 MHz, Si53102-A3, VDD=2.5V	—	—	0.25	ps
PCIe Gen 4 Additive Phase Jitter	RMS_{GEN4}	PCIe Gen4, VDD=3.3V	—	—	0.22	ps
		PCIe Gen4, VDD=2.5V			0.25	ps
Crossing Point Voltage at 0.7 V Swing	V_{OX}	VDD = 3.3 V	300	—	550	mV
		VDD = 2.5 V	200	—	550	mV
Enable/Disable and Setup						
Clock Stabilization from Powerup	T_{STABLE}	Power up to first output	—	—	3.0	ms

Note:

1. Visit www.pcisig.com for complete PCIe specifications
2. Gen 4 specifications based on the PCI-Express Base Specification 4.0 rev. 0.5.
3. Download the Silicon Labs PCIe Clock Jitter Tool at www.silabs.com/pcie-learningcenter.

Table 2.4. Thermal Conditions

Parameter	Symbol	Condition	Min	Typ	Max	Unit
Temperature, Storage	T_S	Non-functional	–65		150	°C
Temperature, Operating Ambient	T_A	Functional	–40		85	°C
Temperature, Junction	T_J	Functional	—		150	°C
Dissipation, Junction to Case	θ_{JC}	JEDEC (JESD 51)	—		38.3	°C/W
Dissipation, Junction to Ambient	θ_{JA}	JEDEC (JESD 51)	—		90.4	°C/W

Table 2.5. Absolute Maximum Conditions

Parameter	Symbol	Condition	Min	Typ	Max	Unit
Main Supply Voltage	$V_{DD_3.3V}$		—		4.6	V
Input Voltage	V_{IN}	Relative to V_{SS}	–0.5		4.6	V_{DC}
ESD Protection (Human Body Model)	ESD_{HBM}	JEDEC (JESD 22-A114)	2000		—	V
Flammability Rating	UL-94	UL (Class)		V–0		

3. Test and Measurement Setup

The following figures show the test load configurations for the differential clock signals.

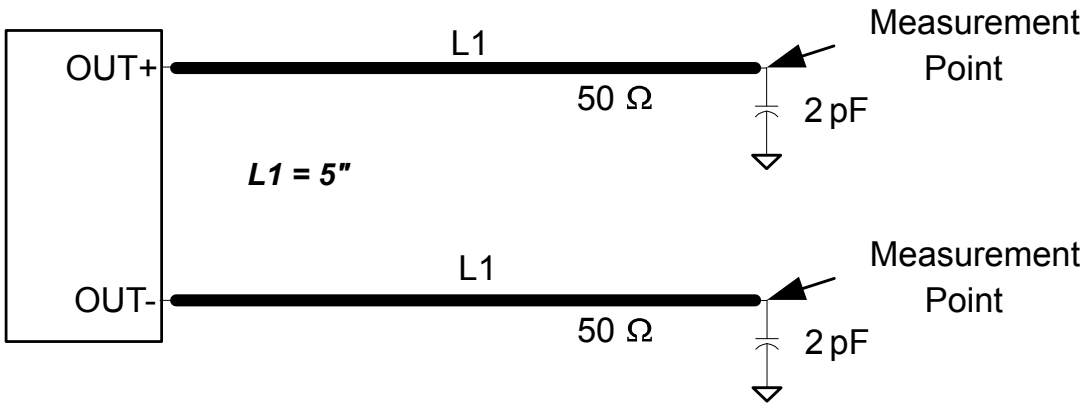

Figure 3.1. 0.7 V Differential Load Configuration

The outputs from this device can also support LVDS, LVPECL, or CML differential signaling levels using alternative termination. For recommendations on how to achieve this, see "AN781: Alternative Output Termination for Si5211x, Si5213x, Si5214x, Si5216x, Si5310x, Si5311x, and Si5315x PCIe Clock Generator and Buffer Families.

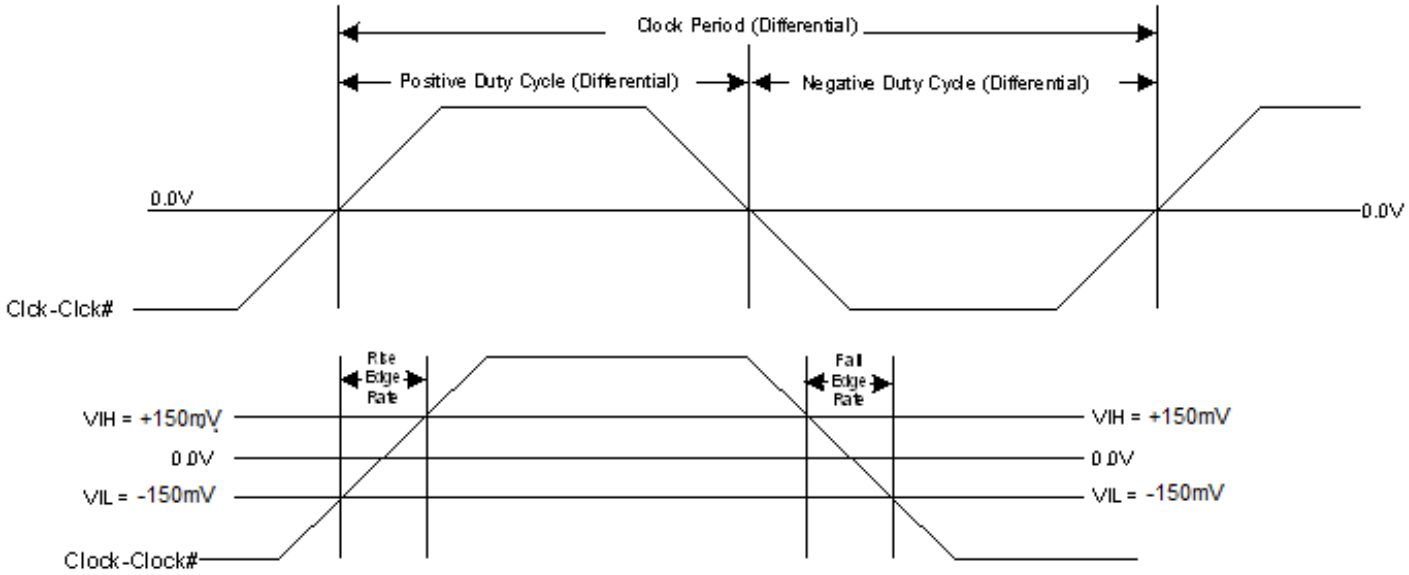

Figure 3.2. Differential Measurement for Differential Output Signals (AC Parameters Measurement)

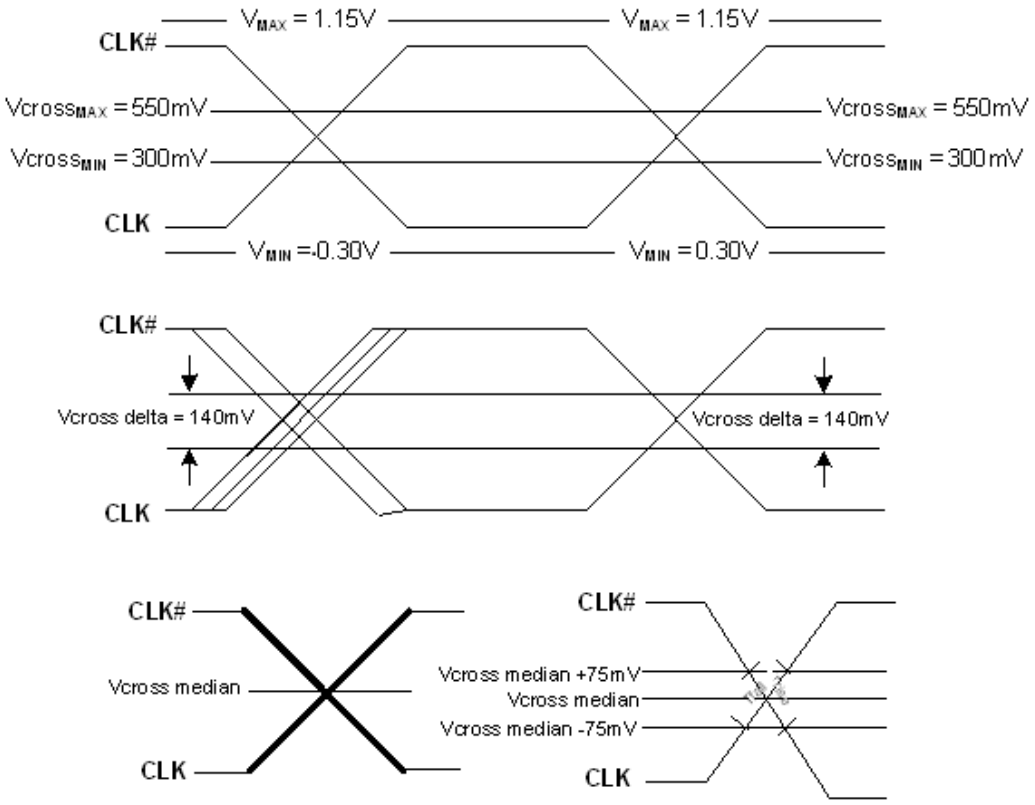

Figure 3.3. Single-Ended Measurement for Differential Output Signals (AC Parameters Measurement)

4. Recommended Design Guideline

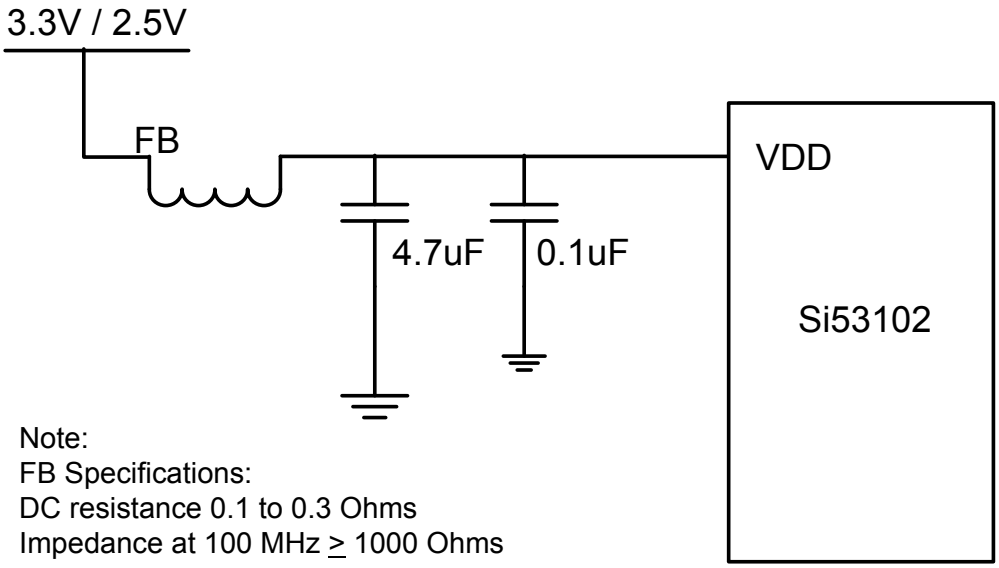

Figure 4.1. Recommended Application Schematic

5. Pin Descriptions

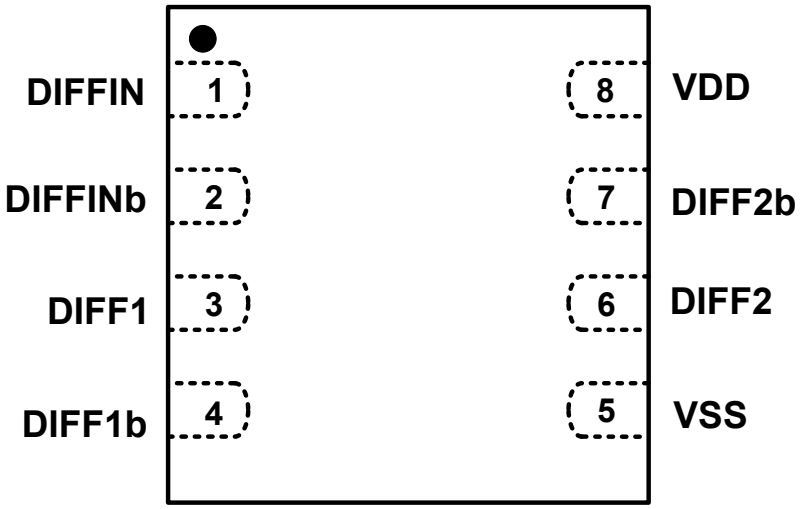

Figure 5.1. 8-Pin TDFN

Table 5.1. Si53102-Ax-GM 8-Pin TDFN Descriptions

Pin #	Name	Type	Description
1	DIFFIN	O, DIF	0.7 V, 100 MHz differentials clock input
2	DIFFINb	O, DIF	0.7 V, 100 MHz differentials clock input
3	DIFF1	O, DIF	0.7 V, 100 MHz differential clock output
4	DIFF1b	O, DIF	0.7 V, 100 MHz differential clock output
5	GND	GND	Ground
6	DIFF2	O, DIF	0.7 V, 100 MHz differential clock output
7	DIFF2b	O, DIF	0.7 V, 100 MHz differential clock output
8	VDD	PWR	2.5 V or 3.3 V Power supply

6. Package Outline

The figure below illustrates the package details for the Si53102-A1-A2-A3 in an 8-Pin TDFN package. The table lists the values for the dimensions shown in the illustration.

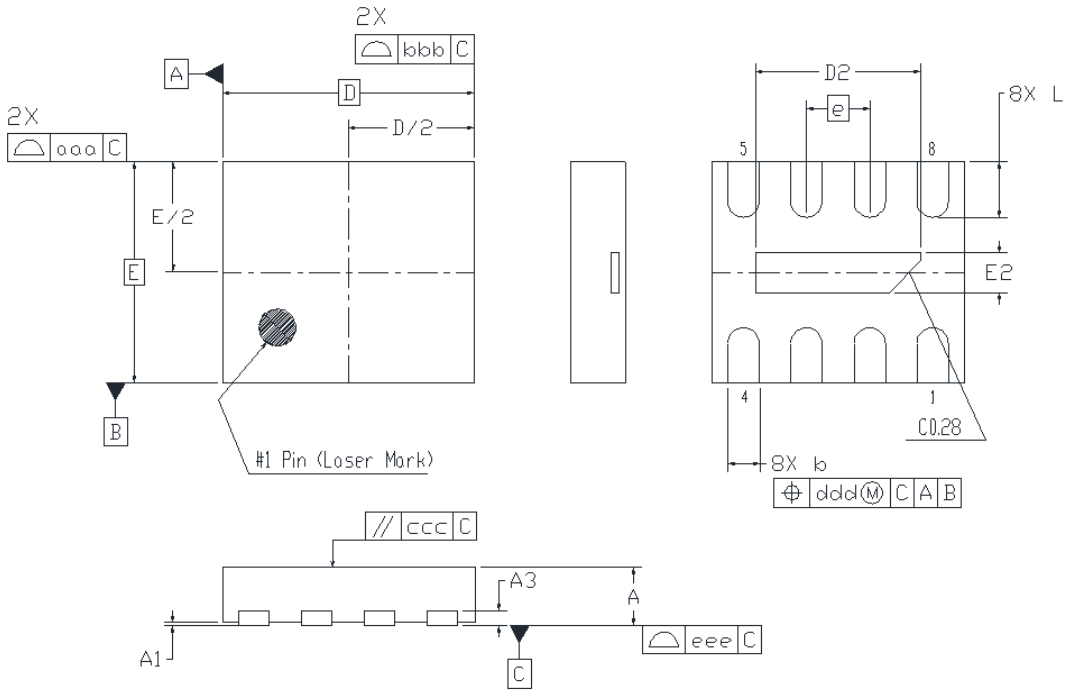

Figure 6.1. 8-Pin TDFN Package Drawing

Table 6.1. Package Diagram Dimensions

Dimension	Min	Nom	Max
A	0.70	0.75	0.80
A1	0.00	0.02	0.05
A3		0.20 REF.	
b	0.15	0.20	0.25
D		1.60 BSC	
D2	1.00	1.05	1.10
e		0.40 BSC	
E		1.40 BSC	
E2	0.20	0.25	0.30
L	0.30	0.35	0.40
aaa		0.10	
bbb		0.10	
ccc		0.10	
ddd		0.07	
eee		0.08	

Dimension	Min	Nom	Max

Note:

1. All dimensions shown are in millimeters (mm) unless otherwise noted.
2. Dimensioning and Tolerancing per ANSI Y14.5M-1994.
3. Recommended card reflow profile is per the JEDEC/IPC J-STD-020 specification for Small Body Components.

7. Land Pattern

The following figure illustrates the land pattern details for the Si53102-A1-A2-A3 in an 8-Pin TDFN package. The table lists the values for the dimensions shown in the illustration.

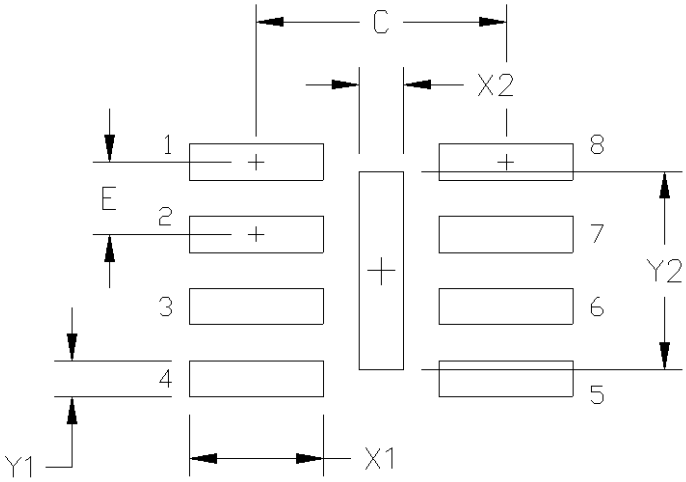

Figure 7.1. 8-Pin TDFN Land Pattern

Table 7.1. Land Pattern Dimensions

Dimension	mm
C1	1.40
E	0.40
X1	0.75
Y1	0.20
X2	0.25
Y2	1.10

Notes:

General

1. All dimensions shown are in millimeters (mm).
2. This Land Pattern Design is based on the IPC-7351 guidelines.
3. All dimensions shown are at Maximum Material Condition (MMC). Least Material Condition (LMC) is calculated based on a Fabrication Allowance of 0.05 mm.

Solder Mask Design

1. All metal pads are to be non-solder mask defined (NSMD). Clearance between the solder mask and the metal pad is to be 60 µm minimum, all the way around the pad.

Stencil Design

1. A stainless steel, laser-cut and electro-polished stencil with trapezoidal walls should be used to assure good solder paste release.
2. The stencil thickness should be 0.125 mm (5 mils).
3. The ratio of stencil aperture to land pad size should be 1:1 for all pads.

Card Assembly

1. A No-Clean, Type-3 solder paste is recommended.
2. The recommended card reflow profile is per the JEDEC/IPC J-STD-020 specification for Small Body Components.

8. Revision History

8.1 Revision 1.0

July 25, 2013

Full-production revision from Rev 0.4

- Updated AC Electrical Specifications table.
  - Updated input frequency min and max specs.
- Updated Test and Measurement Setup section.
  - Added text and reference to AN781.

8.2 Revision 1.1

August 5, 2013

- Moved Recommended Design Guideline section.
- Updated Pin Descriptions.
- Updated Package Outline.
- Added Land Pattern.

8.3 Revision 1.2

December 2, 2015

- Updated Features.
- Updated Description.
- Updated AC Electrical Specifications table.

8.4 Revision 1.3

July 21, 2017

- Updated IDD max specification.
- Separated VOX into 2.5 V and 3.3 V specifications.
- Separated PCie Gen3 jitter into 2.5 V and 3.3 V specifications.
- Separated PCIe Gen4 jitter into 2.5 V and 3.3 V specifications.

8.5 Revision 1.4

July 28, 2017

- Updated 2. Electrical Specifications.
  - Updated PCIe Gen 4 Additive Phase Jitter max spec.
- Updated 6. Package Outline.
  - Added notes to Table 6.1 Package Diagram Dimensions on page 11.

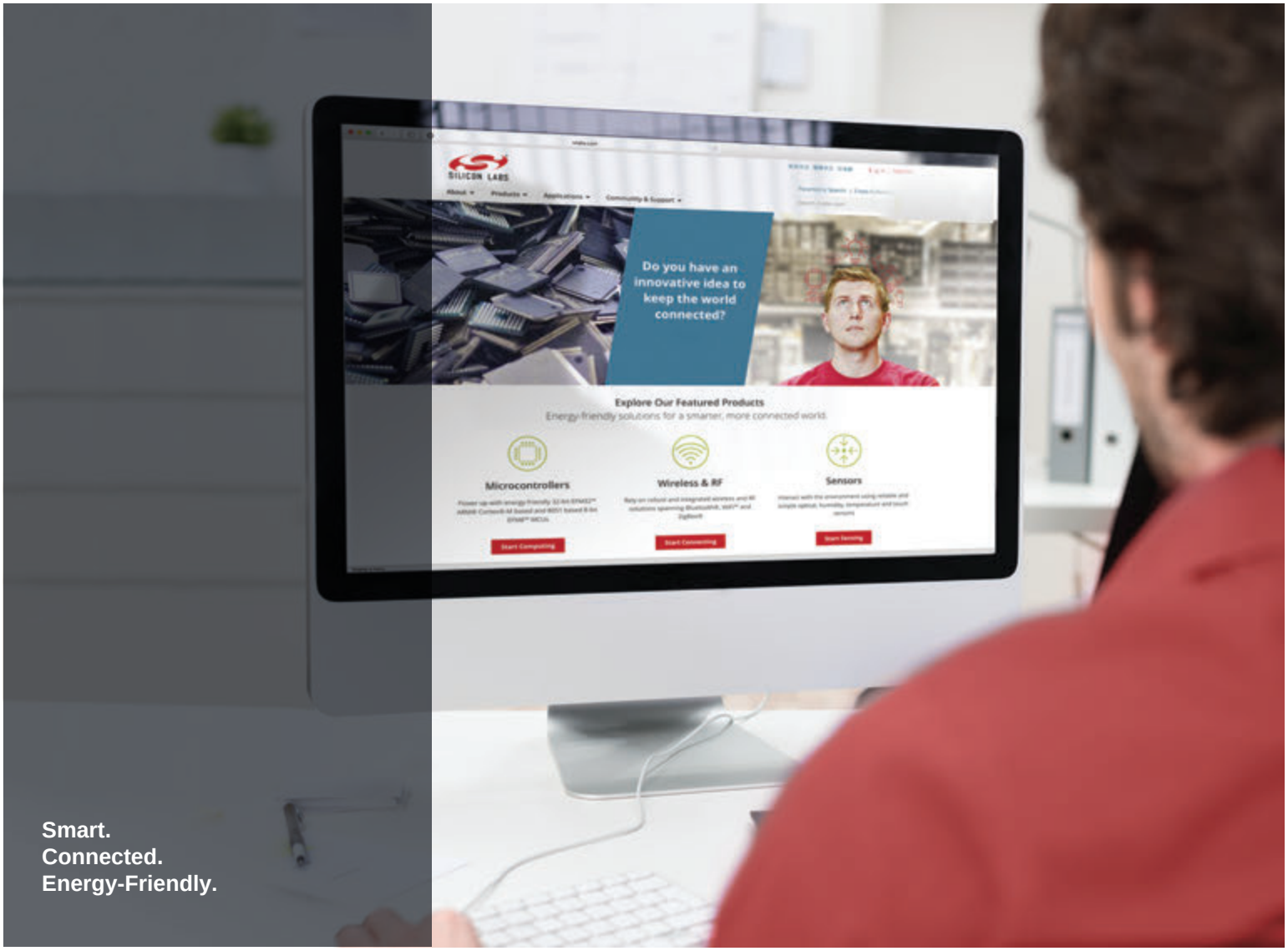

Products
www.silabs.com/products

Quality
www.silabs.com/quality

Support and Community
community.silabs.com

Disclaimer
Silicon Labs intends to provide customers with the latest, accurate, and in-depth documentation of all peripherals and modules available for system and software implementers using or intending to use the Silicon Labs products. Characterization data, available modules and peripherals, memory sizes and memory addresses refer to each specific device, and "Typical" parameters provided can and do vary in different applications. Application examples described herein are for illustrative purposes only. Silicon Labs reserves the right to make changes without further notice and limitation to product information, specifications, and descriptions herein, and does not give warranties as to the accuracy or completeness of the included information. Silicon Labs shall have no liability for the consequences of use of the information supplied herein. This document does not imply or express copyright licenses granted hereunder to design or fabricate any integrated circuits. The products are not designed or authorized to be used within any Life Support System without the specific written consent of Silicon Labs. A "Life Support System" is any product or system intended to support or sustain life and/or health, which, if it fails, can be reasonably expected to result in significant personal injury or death. Silicon Labs products are not designed or authorized for military applications. Silicon Labs products shall under no circumstances be used in weapons of mass destruction including (but not limited to) nuclear, biological or chemical weapons, or missiles capable of delivering such weapons.

Trademark Information
Silicon Laboratories Inc.® , Silicon Laboratories®, Silicon Labs®, SiLabs® and the Silicon Labs logo®, Bluegiga®, Bluegiga Logo®, Clockbuilder®, CMEMS®, DSPLL®, EFM®, EFM32®, EFR, Ember®, Energy Micro, Energy Micro logo and combinations thereof, "the world's most energy friendly microcontrollers", Ember®, EZLink®, EZRadio®, EZRadioPRO®, Gecko®, ISOmodem®, Micrium, Precision32®, ProSLIC®, Simplicity Studio®, SiPHY®, Telegesis, the Telegesis Logo®, USBXpress®, Zentri and others are trademarks or registered trademarks of Silicon Labs. ARM, CORTEX, Cortex-M3 and THUMB are trademarks or registered trademarks of ARM Holdings. Keil is a registered trademark of ARM Limited. All other products or brand names mentioned herein are trademarks of their respective holders.

SILICON LABS

Silicon Laboratories Inc.
400 West Cesar Chavez
Austin, TX 78701
USA

http://www.silabs.com

Мы молодая и активно развивающаяся компания в области поставок электронных компонентов. Мы поставляем электронные компоненты отечественного и импортного производства напрямую от производителей и с крупнейших складов мира.

Благодаря сотрудничеству с мировыми поставщиками мы осуществляем комплексные и плановые поставки широчайшего спектра электронных компонентов.

Собственная эффективная логистика и склад в обеспечивает надежную поставку продукции в точно указанные сроки по всей России.

Мы осуществляем техническую поддержку нашим клиентам и предпродажную проверку качества продукции. На все поставляемые продукты мы предоставляем гарантию .

Осуществляем поставки продукции под контролем ВП МО РФ на предприятия военно-промышленного комплекса России , а также работаем в рамках 275 ФЗ с открытием отдельных счетов в уполномоченном банке. Система менеджмента качества компании соответствует требованиям ГОСТ ISO 9001.

Минимальные сроки поставки, гибкие цены, неограниченный ассортимент и индивидуальный подход к клиентам являются основой для выстраивания долгосрочного и эффективного сотрудничества с предприятиями радиоэлектронной промышленности, предприятиями ВПК и научно-исследовательскими институтами России.

С нами вы становитесь еще успешнее!

Наши контакты:

Телефон: +7 812 627 14 35

Электронная почта: sales@st-electron.ru

Адрес: 198099, Санкт-Петербург, Промышленная ул, дом № 19, литера Н, помещение 100-Н Офис 331