6-PIN DIP OPTOISOLATORS LOGIC OUTPUT

H11L1M **H11L2M** **H11L3M**

PACKAGE

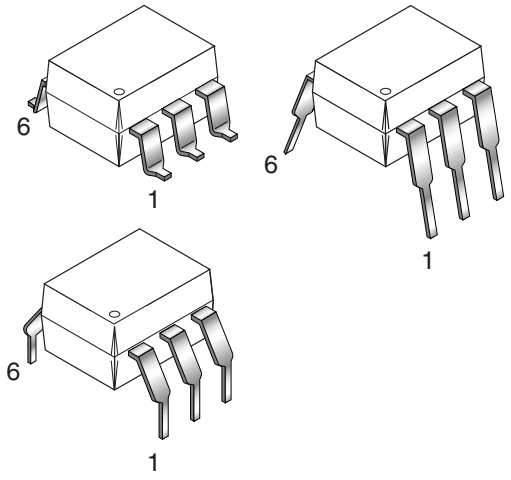

SCHEMATIC

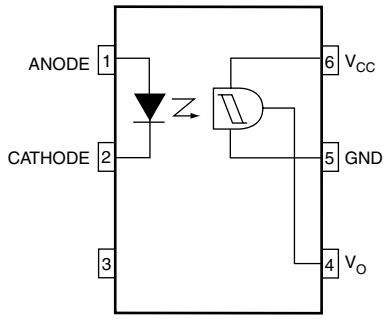

DESCRIPTION

The H11LXM series has a high speed integrated circuit detector optically coupled to a gallium-arsenide infrared emitting diode. The output incorporates a Schmitt trigger, which provides hysteresis for noise immunity and pulse shaping. The detector circuit is optimized for simplicity of operation and utilizes an open collector output for maximum application flexibility.

Truth Table

Input	Output
H	L
L	H

FEATURES

- High data rate, 1 MHz typical (NRZ)
- Free from latch up and oscilliation throughout voltage and temperature ranges.
- Microprocessor compatible drive
- Logic compatible output sinks 16 mA at 0.4 V maximum
- Guaranteed on/off threshold hysteresis
- Wide supply voltage capability, compatible with all popular logic systems
- Underwriters Laboratory (UL) recognized—file #E90700, Volume 2
- VDE recognized – File#102497 – Add option V (e.g., H11LIVM)

APPLICATIONS

- Logic to logic isolator
- Programmable current level sensor
- Line receiver—eliminate noise and transient problems
- A.C. to TTL conversion—square wave shaping
- Digital programming of power supplies
- Interfaces computers with peripherals

© 2003 Fairchild Semiconductor Corporation

ABSOLUTE MAXIMUM RATINGS

Parameters	Symbol	Device	Value	Units
TOTAL DEVICE				
Storage Temperature	T_{STG}	All	-55 to +150	°C
Operating Temperature	T_{OPR}	All	-40 to +85	°C
Lead Solder Temperature	T_{SOL}	All	260 for 10 sec	°C
Total Device Power Dissipation @ 25°C	P_D	All	250	mW
Derate Above 25°C			2.94	mW/°C
EMITTER				
Continuous Forward Current	I_F	All	60	mA
Reverse Voltage	V_R	All	6	V
Forward Current - Peak (1 µs pulse, 300 pps)	I_F(pk)	All	3.0	A
LED Power Dissipation 25°C Ambient	P_D	All	120	mW
Derate Linearly From 25°C			1.41	mW/°C
DETECTOR				
Detector Power Dissipation @ 25°C	P_D	All	150	mW
Derate Linearly from 25°C			2.0	mW/°C
V_{45} Allowed Range	V_O	All	0 to 16	V
V_{65} Allowed Range	V_{CC}	All	3 to 16	V
I_4 Output Current	I_O	All	50	mA

ELECTRICAL CHARACTERISTICS (T_A = 25°C Unless otherwise specified.)

INDIVIDUAL COMPONENT CHARACTERISTICS

Parameters	Test Conditions	Symbol	Device	Min	Typ	Max	Units
EMITTER							
Input Forward Voltage	I_F = 10 mA	V_F	All		1.2	1.5	V
	I_F = 0.3 mA			0.75	1.0		
Reverse Current	V_R = 3 V	I_R	All			10	µA
Capacitance	V = 0, f = 1.0 MHz	C_J	All			100	pF
DETECTOR							
Operating Voltage Range		V_{CC}	All	3		15	V
Supply Current	I_F = 0, V_{CC} = 5V	$I_{CC(off)}$	All		1.6	5.0	mA
Output Current, High	I_F = 0, V_{CC} = V_O = 15V	I_{OH}	All			100	µA

© 2003 Fairchild Semiconductor Corporation

ISOLATION CHARACTERISTICS

Parameters	Test Conditions	Symbol	Min	Typ	Max	Units
Input-Output Isolation Voltage	t =1 sec.	V_{ISO}	7500			V_{PEAK}
Isolation Capacitance	V_{I-O} = 0V, f = 1 MHz	C_{ISO}		0.4	0.6	pF
Isolation Resistance	V_{I-O} = ±500 VDC	R_{ISO}	10^{11}			Ω

TRANSFER CHARACTERISTICS

DC Characteristics	Test Conditions	Symbol	Device	Min	Typ	Max	Units
Supply Current	I_F = 10mA, V_{CC} = 5V	$I_{CC(on)}$	All		1.6	5.0	mA
Output Voltage, low	R_L=270Ω,V_{CC}=5V, I_F=$I_{F(on)}$ max.	V_{OL}	All		0.2	0.4	V
Turn-On Threshold Current	R_L=270Ω, V_{CC} = 5V	$I_{F(on)}$*	H11L1M			1.6	mA
			H11L2M			10.0	
			H11L3M			5.0	
Turn-Off Threshold Current	R_L=270Ω, V_{CC} = 5V	$I_{F(off)}$	All	0.3	1.0		mA
Hysteresis Ratio	R_L=270Ω, V_{CC} = 5V	$I_{F(off)}/I_{F(on)}$	All	0.50	0.75	0.90	
AC Characteristics	**Test Conditions**	**Symbol**	**Device**	**Min**	**Typ**	**Max**	**Units**
SWITCHING SPEED							
Turn-On time	R_L=270Ω, V_{CC} = 5V, I_F=$I_{F(on)}$, T_A=25°C	t_{on}	All		1.0		µs
					0.65		
						4	
Fall Time	R_L=270Ω, V_{CC} = 5V, I_F=$I_{F(on)}$, T_A=25°C	t_f	All		0.1		µs
					.05		
					0.1		
Turn-Off Time	R_L=270Ω, V_{CC} = 5V, I_F=$I_{F(on)}$, T_A=25°C	t_{off}	All		2.0		µs
					1.2		
						4	
Rise time	R_L=270Ω, V_{CC} = 5V, I_F=$I_{F(on)}$, T_A=25°C	t_r	All		0.1		µs
					0.07		
					0.1		
Data Rate			All		1.0		MHz

NOTE:
*Maximum $I_{F(ON)}$ is the maximum current required to trigger the output. For example, a 1.6mA maximum trigger current would require the LED to be driven at a current greater than 1.6mA to guarantee the device will turn on. A 10% guard band is recommended to account for degradation of the LED over its lifetime. The maximum allowable LED drive current is 60mA.

© 2003 Fairchild Semiconductor Corporation

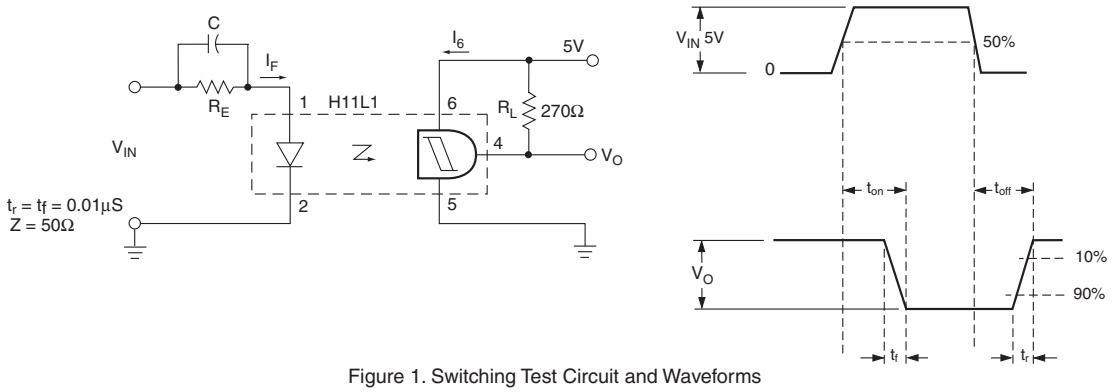

Figure 1. Switching Test Circuit and Waveforms

TYPICAL PERFORMANCE CURVES

Figure 2. Transfer Characteristics

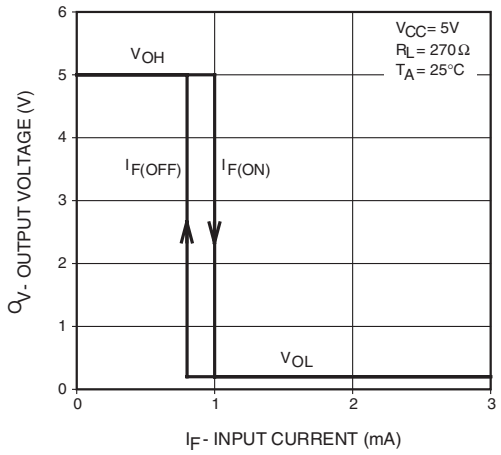

Figure 3. Threshold Current vs. Supply Voltage

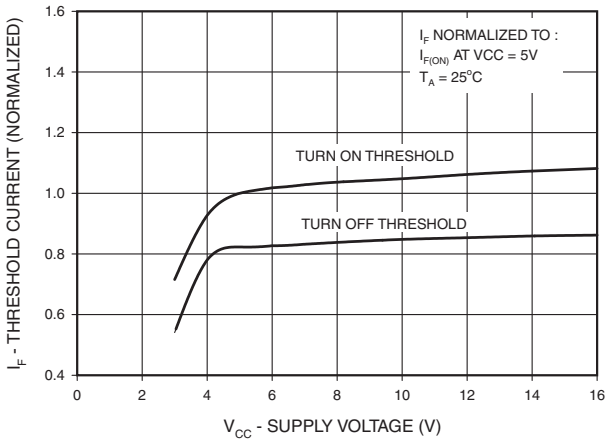

Figure 4. Threshold Current vs. Supply Temperature

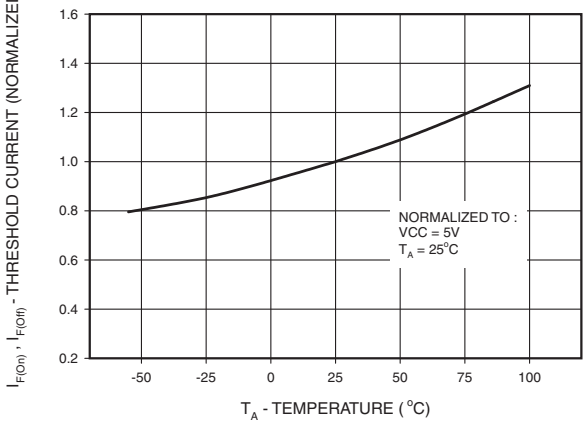

Figure 5. Output Voltage, Low vs. Load Current

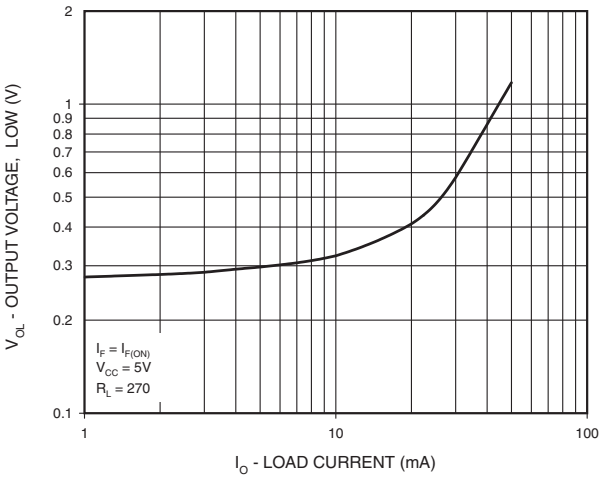

TYPICAL PERFORMANCE CURVES

Figure 6. Supply Current vs. Supply Voltage

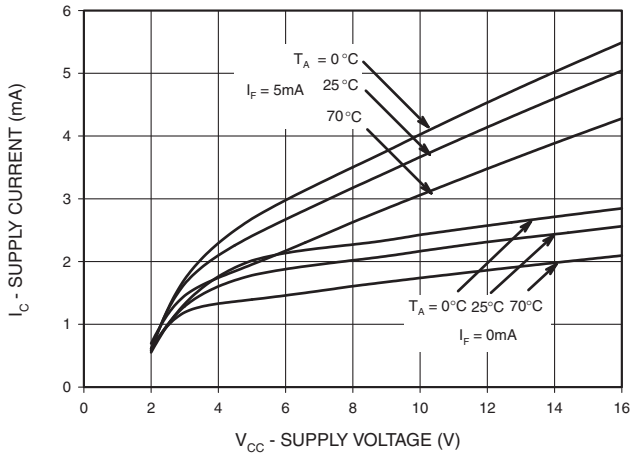

Figure 7. LED Forward Voltage vs. Forward Current

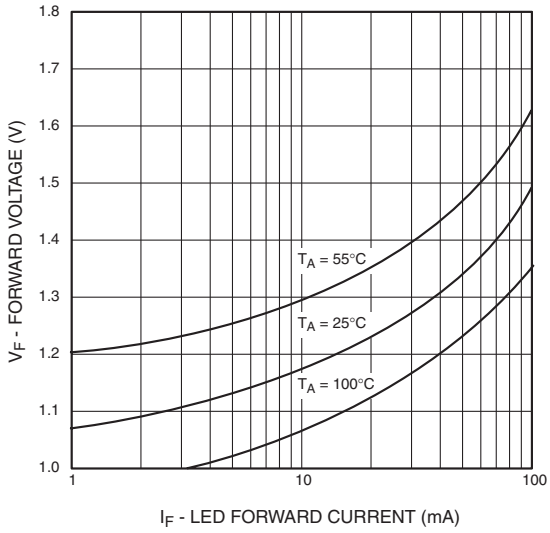

© 2003 Fairchild Semiconductor Corporation

Package Dimensions (Through Hole)

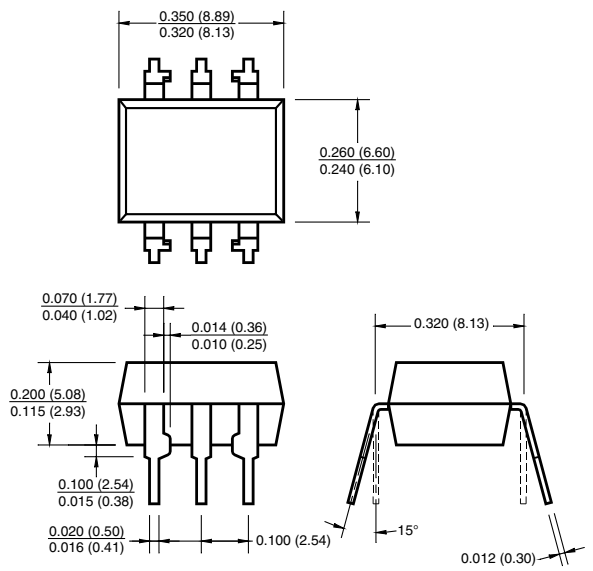

Package Dimensions (Surface Mount)

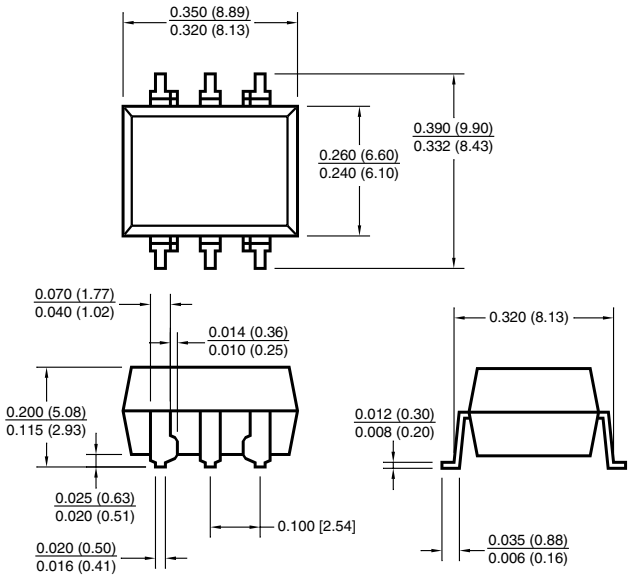

Package Dimensions (0.4" Lead Spacing)

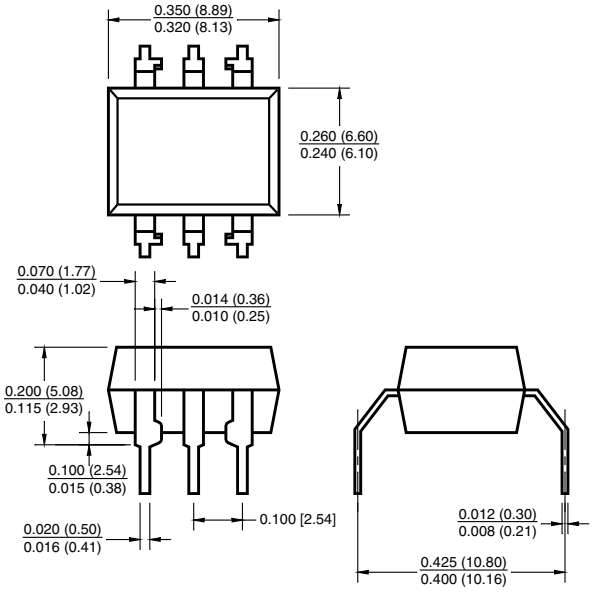

Recommended Pad Layout for Surface Mount Leadform

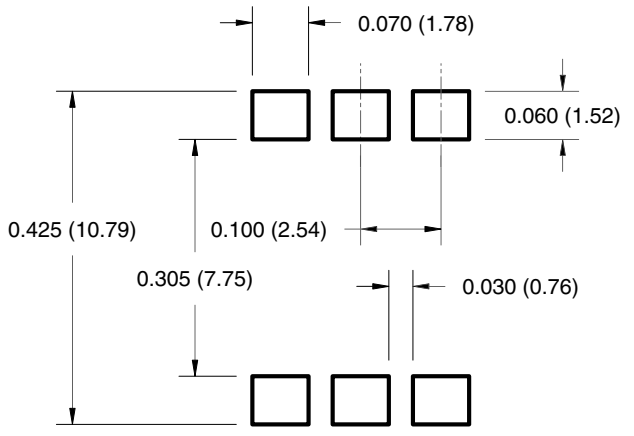

NOTE
All dimensions are in inches (millimeters)

© 2003 Fairchild Semiconductor Corporation

ORDERING INFORMATION

Option/Order Entry Identifier	Description
S	Surface Mount Lead Bend
SR2	Surface Mount; Tape and reel
T	0.4" Lead Spacing
V	VDE 0884
TV	VDE 0884, 0.4" Lead Spacing
SV	VDE 0884, Surface Mount
SR2V	VDE 0884, Surface Mount, Tape & Reel

MARKING INFORMATION

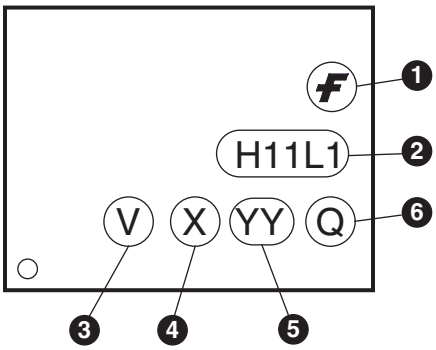

Definitions	
1	Fairchild logo
2	Device number
3	VDE mark (Note: Only appears on parts ordered with VDE option – See order entry table)
4	One digit year code, e.g., ‘3’
5	Two digit work week ranging from ‘01’ to ‘53’
6	Assembly package code

*Note – ‘V’ option parts marked with date code ‘325’ or earlier are marked in portrait format.

© 2003 Fairchild Semiconductor Corporation

Carrier Tape Specifications

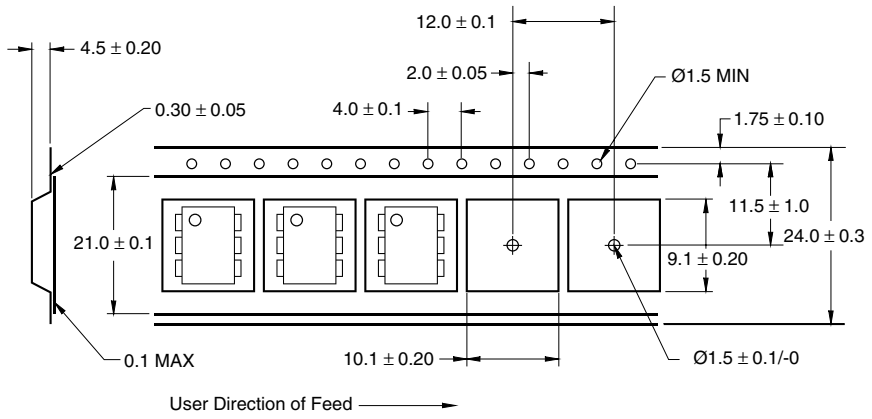

NOTE
All dimensions are in inches (millimeters)

Reflow Profile

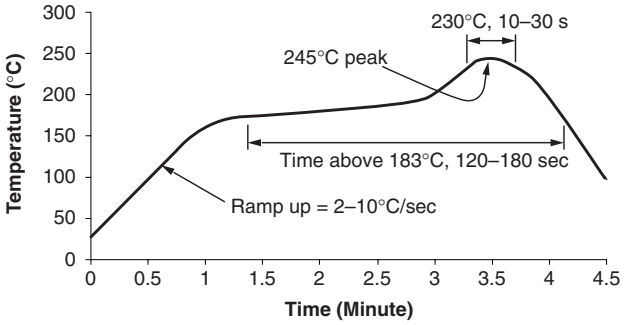

- Peak reflow temperature: 245°C (package surface temperature)
- Time of temperature higher than 183°C for 120–180 seconds
- One time soldering reflow is recommended

DISCLAIMER

FAIRCHILD SEMICONDUCTOR RESERVES THE RIGHT TO MAKE CHANGES WITHOUT FURTHER NOTICE TO ANY PRODUCTS HEREIN TO IMPROVE RELIABILITY, FUNCTION OR DESIGN. FAIRCHILD DOES NOT ASSUME ANY LIABILITY ARISING OUT OF THE APPLICATION OR USE OF ANY PRODUCT OR CIRCUIT DESCRIBED HEREIN; NEITHER DOES IT CONVEY ANY LICENSE UNDER ITS PATENT RIGHTS, NOR THE RIGHTS OF OTHERS.

LIFE SUPPORT POLICY

FAIRCHILD'S PRODUCTS ARE NOT AUTHORIZED FOR USE AS CRITICAL COMPONENTS IN LIFE SUPPORT DEVICES OR SYSTEMS WITHOUT THE EXPRESS WRITTEN APPROVAL OF THE PRESIDENT OF FAIRCHILD SEMICONDUCTOR CORPORATION. As used herein:

1. Life support devices or systems are devices or systems which, (a) are intended for surgical implant into the body, or (b) support or sustain life, and (c) whose failure to perform when properly used in accordance with instructions for use provided in the labeling, can be reasonably expected to result in a significant injury of the user.
2. A critical component in any component of a life support device or system whose failure to perform can be reasonably expected to cause the failure of the life support device or system, or to affect its safety or effectiveness.

© 2003 Fairchild Semiconductor Corporation

Мы молодая и активно развивающаяся компания в области поставок электронных компонентов. Мы поставляем электронные компоненты отечественного и импортного производства напрямую от производителей и с крупнейших складов мира.

Благодаря сотрудничеству с мировыми поставщиками мы осуществляем комплексные и плановые поставки широчайшего спектра электронных компонентов.

Собственная эффективная логистика и склад в обеспечивает надежную поставку продукции в точно указанные сроки по всей России.

Мы осуществляем техническую поддержку нашим клиентам и предпродажную проверку качества продукции. На все поставляемые продукты мы предоставляем гарантию .

Осуществляем поставки продукции под контролем ВП МО РФ на предприятия военно-промышленного комплекса России , а также работаем в рамках 275 ФЗ с открытием отдельных счетов в уполномоченном банке. Система менеджмента качества компании соответствует требованиям ГОСТ ISO 9001.

Минимальные сроки поставки, гибкие цены, неограниченный ассортимент и индивидуальный подход к клиентам являются основой для выстраивания долгосрочного и эффективного сотрудничества с предприятиями радиоэлектронной промышленности, предприятиями ВПК и научно-исследовательскими институтами России.

С нами вы становитесь еще успешнее!

Наши контакты:

Телефон: +7 812 627 14 35

Электронная почта: sales@st-electron.ru

Адрес: 198099, Санкт-Петербург, Промышленная ул, дом № 19, литера Н, помещение 100-Н Офис 331