The product information in this catalog is for reference only. Please request the Engineering Drawing for the most current and accurate design information.
All non-RoHS products have been discontinued, or will be discontinued soon. Please check the products status on the Hirose website RoHS search at www.hirose-connectors.com, or contact your Hirose sales representative.

# DXM (1.27MM PITCH) SERIES HIGH-DENSITY I/O CONNECTOR

## General

DXM series high-density I/O connectors with bellow contacts are perfect for tomorrow's miniaturized electronic devices. This new 1.27mm (0.050") interconnect design ensures positive locking, effortless coupling, terminal protection and EMI reduction in a miniaturized and rugged package. DXM series offer you one of the most varied and complete lines of High-Density connectors in the world, i.e. IDC and Solder for the plug and right angle dip, straight dip, IDC and SMT for the receptacle. Available in 14, 20, 26, 36, 50, 68, 80, 100 and 110 way.

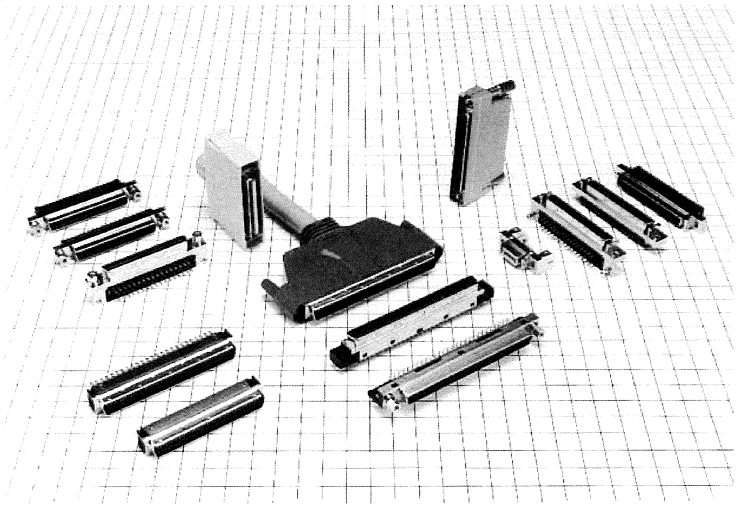

## Features

1. 1.27mm (0.050") contact spacing conserves valuable board space and permits ultra-high density designs.
2. Bellow contacts create smooth and precise mating and unmating.
3. Unique shell design assures first make/last break grounding and overall noise protection.
4. IDC termination allows quick and low cost termination to AWG #28 wires.
5. Backshell and receptacle shell are made of die-cast zinc alloy or stainless steel to reduce the penetration of external EMI noise.
6. Ferrite added to DX Right Angle Dip Type for EMI Protection is available.
7. Overmold backshell provided for ESD protection is available in 'One-Touch' locking and 'Screw' locking.
8. Termination methods are available in IDC, Soldering, Right Angle Dip, Straight Dip and SMT.

## Application

Office Autmation, Computers, Measurement, Communication and Control Equipment, Factory Automation, Home Automation and other commercial applications needing high density interconnections.

## Specifications

| Items | Standard value |
|---|---|
| Current capacity | 0.5A |
| Rated voltage | AC125V |
| Insulation resistance | 250M Ω or more at DC100V |
| Contact resistance | 35m Ω or less at DC100mA |
| Withstanding voltage | AC 300Vr.m.s. for 1 minute |

The product information in this catalog is for reference only. Please request the Engineering Drawing for the most current and accurate design information.
All non-RoHS products have been discontinued, or will be discontinued soon. Please check the products status on the Hirose website RoHS search at www.hirose-connectors.com, or contact your Hirose sales representative.

# DXM Series Variations

## ●One-touch lock type (14, 20, 26, 36, 50, 68 pins)

### Plug cover

1.1 Over mold cover type

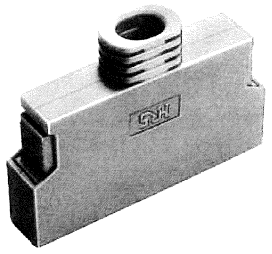

### Plug

2.1 IDC type

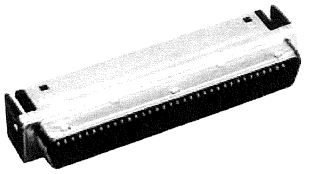

### Receptacle

3.1 Right angle dip
Board screw on type

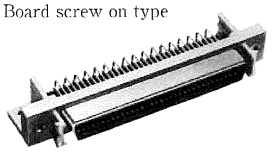

3.2 Right angle dip
Board lock pin harpoon type

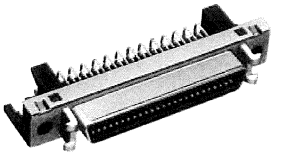

3.3 Right angle dip
Board lock pin round type
(round type)

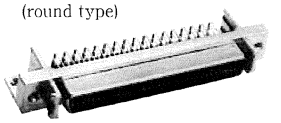

5.1 Straight dip type

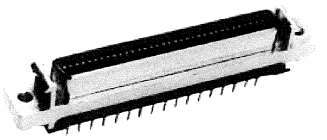

6.1 IDC type
(68 pins)

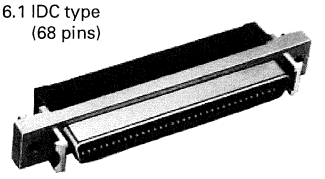

The product information in this catalog is for reference only. Please request the Engineering Drawing for the most current and accurate design information.
All non-RoHS products have been discontinued, or will be discontinued soon. Please check the products status on the Hirose website RoHS search at www.hirose-connectors.com, or contact your Hirose sales representative.

# ●Screw lock type (68, 80, 100, 110 pins)

## Overmold cover type (100, 110 pins)

### Plug cover

7.1 Over mold cover type

### Plug

2.1 IDC type

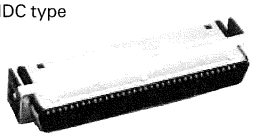

13.1 Straight dip (110 pins)

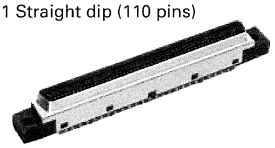

### Receptacle

8.2 Right angle dip
Board lock pin harpoon type

9.1 Right angle dip
Ferrite core type
(100 pins)

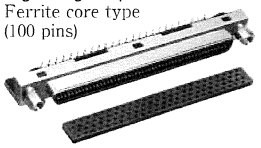

## Die cast cover (68, 80, 100 pins)

### Plug cover

7.2 Die cast cover type

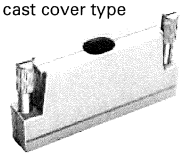

### Plug

2.1 IDC type

### Receptacle

8.1 Right angle dip
Board screw on type

8.3 Right angle dip
Board lock pin round type
(round type)

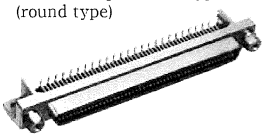

Note: There is no interchangeability between the locks of the die cast cover type and overmold type.

11.1 Straight dip type

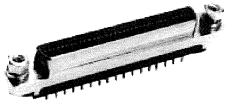

12.1 IDC type
(68 pins)

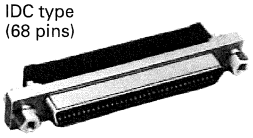

The product information in this catalog is for reference only. Please request the Engineering Drawing for the most current and accurate design information.
All non-RoHS products have been discontinued, or will be discontinued soon. Please check the products status on the Hirose website RoHS search at www.hirose-connectors.com, or contact your Hirose sales representative.

# 1. One Touch Lock Plug Cover

## Ordering Information

DX30M — 50 — CV

(1) (2) (3)

1) Series number: DX30M
2) No. of pins: 14, 20, 26, 36, 50, 68
3) Cover case type
   CV: Over mold cover case

## Material Treatment

| Item | Material | Remarks |
|---|---|---|
| Overmold cover case | Synthetic resin, Stainless | Light beige |

## 1.1 Overmold Cover

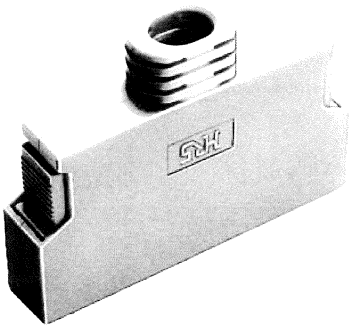

DX30M-68-CV (10)

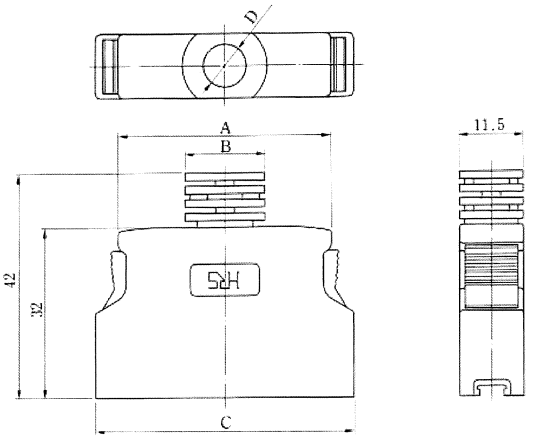


Unit: mm

| HRS No. | No.of pin | Parts No. | A | B | C | D | Applicable plug unit IDC type | | RoHS |
|---|---|---|---|---|---|---|---|---|---|
| CL230-5051-7-10 | 14 | DX30M-14-CV (10) | 17.09 | 11.50 | 25.79 | ø6.3 | DX30AM-14P | | YES |
| CL230-5052-0-10 | 20 | DX30M-20-CV (10) | 20.90 | 14.50 | 29.60 | ø6.7 | DX30AM-20P | | |
| CL230-5053-2-10 | 26 | DX30M-26-CV (10) | 24.80 | 15.00 | 33.50 | ø7.0 | DX30AM-26P | | |
| CL230-5054-5-10 | 36 | DX30M-36-CV (10) | 31.06 | 15.75 | 39.80 | ø8.1 | DX30AM-36P | | |
| CL230-5055-8-10 | 50 | DX30M-50-CV (10) | 39.95 | 16.00 | 48.70 | ø8.7 | DX30AM-50P | | |
| CL230-5056-0-10 | 68 | DX30M-68-CV (10) | 51.38 | 17.57 | 60.13 | 8.7 × 10.27 | DX30AM-68P | | |

## General List of Engagement Combinations

| Cover case and plug unit | Receptacle | | |
|---|---|---|---|
| | Right angle type | Straight type | IDC type |
| DX30M-14-CV (10) + DX30AM-14P | DX10M-14S (E), DX10GM-14SE | DX20M-14S | — |
| DX30M-20-CV (10) + DX30AM-20P | DX10M-20S (E), DX10GM-20SE | DX20M-20S | — |
| DX30M-26-CV (10) + DX30AM-26P | DX10M-26S (E), DX10GM-26SE | DX20M-26S | — |
| DX30M-36-CV (10) + DX30AM-36P | DX10M-36S (E), DX10GM-36SE | DX20M-36S | DX33AM-36S |
| DX30M-50-CV (10) + DX30AM-50P | DX10M-50S (E), DX10GM-50SE | DX20M-50S | DX33AM-50S |
| DX30M-68-CV (10) + DX30AM-68P | DX10M-68S (E), DX10GM-68SE | DX20M-68S | DX33AM-68S |

The product information in this catalog is for reference only. Please request the Engineering Drawing for the most current and accurate design information.
All non-RoHS products have been discontinued, or will be discontinued soon. Please check the products status on the Hirose website RoHS search at www.hirose-connectors.com, or contact your Hirose sales representative.

# 2. Plug Unit (Interchangeable One Touch-Screw Lock Type)

## Ordering Information

DX30 A M — 50 P

(1) (2) (3) (1) (4) (5)

1) Series No.: DX--M
2) Wiring style 30: Discrete cable IDC (for fine wire use)
3) Applicable wire A: AWG#28 (Discrete cable press-fit type)
4) No. of pins: 14, 20, 26, 36, 50, 68, 80, 100, 110
5) Mating type P: Plug

## Material Treatment

| Item | Material | Remarks |
|---|---|---|
| Shell | Steel | Nickel plating |
| Insulator | PBT | Black (UL94V-0) |
| Male terminal | Copper alloy | Selective gold plating |

## Applicable

| | Interface cable | |
|---|---|---|
| | Discrete cable fine wire type | |
| Conductor size | AGW#28 | |
| Conductor composition | 7/0.127 | |
| o.d. of insulator | 0.58 | 0.62 |
| Cable style | UL20276 and UL2789 | UL2990 |

## 2.1 Discrete Cable IDC Type (for Fine Wire)

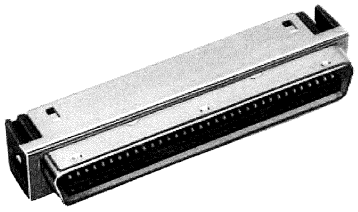

DX30AM-68P

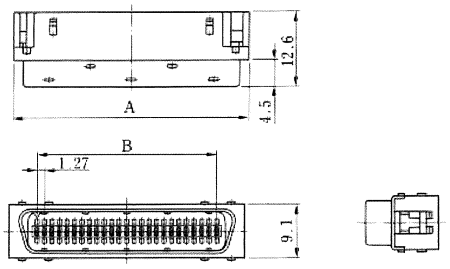


Unit: mm

| HRS No. | No. of pin | Parts No. | A | B | Applicable cover case | | RoHS |
|---|---|---|---|---|---|---|---|
| | | | | | One touch lock type | Screw lock type | |
| CL230-5024-4 | 14 | DX30AM-14P | 17.09 | 7.62 | DX30M-14-CV (10) | — | YES |
| CL230-5025-7 | 20 | DX30AM-20P | 20.90 | 11.43 | DX30M-20-CV (10) | — | |
| CL230-5026-0 | 26 | DX30AM-26P | 24.71 | 15.24 | DX30M-26-CV (10) | — | |
| CL230-5027-2 | 36 | DX30AM-36P | 31.06 | 21.59 | DX30M-36-CV (10) | — | |
| CL230-5028-5 | 50 | DX30AM-50P | 39.95 | 30.48 | DX30M-50-CV (10) | — | |
| CL230-5029-8 | 68 | DX30AM-68P | 51.38 | 41.96 | DX30M-68-CV (10) | DX30M-68-CV2 | |
| CL230-5030-7 | 80 | DX30AM-80P | 59.00 | 49.53 | — | DX30M-80-CV2 | |
| CL230-5031-0 | 100 | DX30AM-100P | 71.70 | 62.23 | — | DX30M-100-CV1・2 | |
| CL230-5064-9 | 110 | DX30AM-110P | 78.05 | 68.58 | — | DX30M-110-CV1 | |

The product information in this catalog is for reference only. Please request the Engineering Drawing for the most current and accurate design information.
All non-RoHS products have been discontinued, or will be discontinued soon. Please check the products status on the Hirose website RoHS search at www.hirose-connectors.com, or contact your Hirose sales representative.

# 3. One Touch Lock, Receptacle Right Angle Type

## Ordering Information

| DX | 10 | ※ | M | – | 50 | S | E | (50) |
|---|---|---|---|---|---|---|---|---|
| (1) | (2) | (3) | (1) | | (4) | (5) | (6) | (7) |

1) Series No.: DX--M
2) Wiring style 10: Right angle type
3) Lock style (one touch lock type)
   Blank : (Receptacle case material: zinc alloy die cast)
   G : (Receptacle case material: steel)
4) No. of pins: 14, 20, 26, 36, 50, 68
5) Mating type S: Receptacle
6) Board-fitting type
   Blank : Screw on type
   E : Lock pin type
7) Individual specifications
   (50) :Dip portion gold plated

## Material Treatment

| Item | Material | Remarks |
|---|---|---|
| Receptacle case | Zinc alloy die cast or steel | Nickel plating |
| Shell | Steel | Nickel plating |
| Insulators | PBT | Black (UL94V-0) |
| Female terminal | Copper alloy | Selective gold plating |

## 3.1 Board Screw on Type

DX10GM-68S (50)

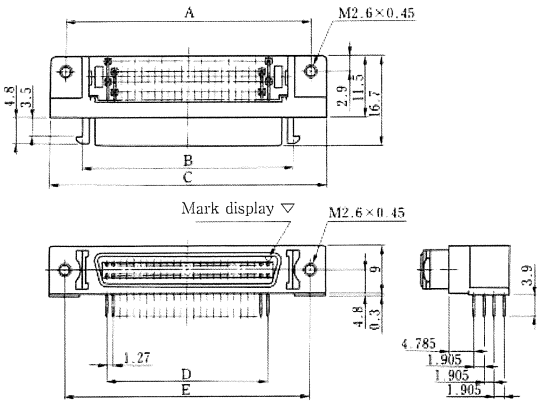


Unit: mm

| HRS No. | No.of pin | Parts No. | A | B | C | D | E | RoHS |
|---|---|---|---|---|---|---|---|---|
| CL230-5223-0-50 | 14 | DX10G1M-14S (50) | 23.64 | 17.14 | 29.54 | 7.62 | 23.64 | YES |
| CL230-5177-5-50 | 20 | DX10GM-20S (50) | 27.45 | 20.95 | 33.35 | 11.43 | 27.45 | |
| CL230-5225-6-50 | 26 | DX10G1M-26S (50) | 31.26 | 24.76 | 37.16 | 15.24 | 31.26 | |
| CL230-5226-9-50 | 36 | DX10G1M-36S (50) | 37.61 | 31.11 | 43.51 | 21.59 | 37.61 | |
| CL230-5227-1-50 | 50 | DX10G1M-50S (50) | 46.50 | 40.00 | 52.40 | 30.48 | 46.50 | |
| CL230-5181-2-50 | 68 | DX10GM-68S (50) | 57.93 | 51.43 | 63.83 | 41.91 | 57.93 | |

## 3.2 Board Lock Pin Harpoon Type

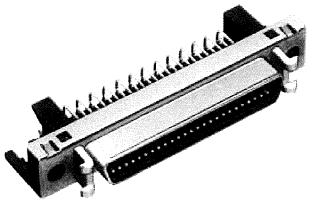

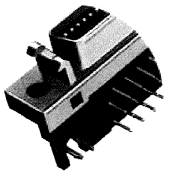

DX10G1M-50SE (50)

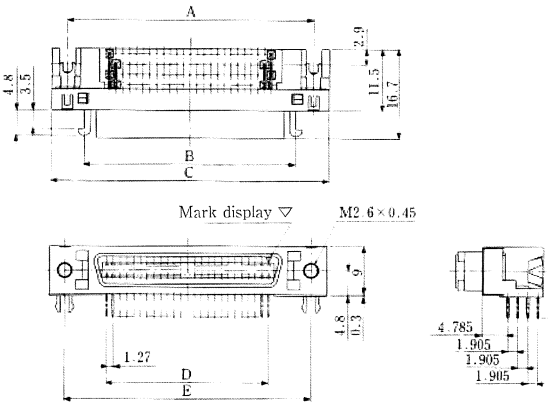


Unit: mm

| HRS No. | No.of pin | Parts No. | A | B | C | D | E | RoHS |
|---|---|---|---|---|---|---|---|---|
| CL230-5210-0-50 | 14 | DX10G1M-14SE (50) | 23.64 | 17.14 | 29.54 | 7.62 | 23.64 | YES |
| CL230-5130-1-50 | 20 | DX10GM-20SE (50) | 27.45 | 20.95 | 33.35 | 11.43 | 27.45 | |
| CL230-5212-4-50 | 26 | DX10G1M-26SE (50) | 31.26 | 24.76 | 37.16 | 15.24 | 31.26 | |
| CL230-5213-7-50 | 36 | DX10G1M-36SE (50) | 37.61 | 31.11 | 43.51 | 21.59 | 37.61 | |
| CL230-5214-0-50 | 50 | DX10G1M-50SE (50) | 46.50 | 40.00 | 52.40 | 30.48 | 46.50 | |
| CL230-5134-2-50 | 68 | DX10GM-68SE (50) | 57.93 | 51.43 | 63.83 | 41.91 | 57.93 | |

## 3.3 Board Lock Pin Round Type

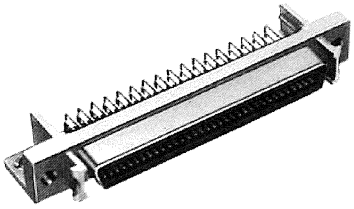

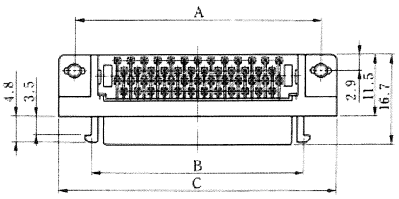


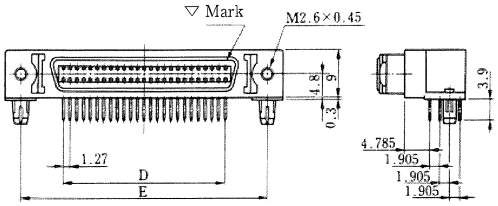


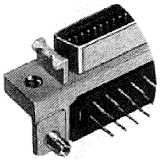

DX10M-68SE (50)

Unit: mm

| HRS No. | No.of pin | Parts No. | A | B | C | D | E | RoHS |
|---|---|---|---|---|---|---|---|---|
| CL230-5107-0-50 | | DX10M-14SE (50) | 23.64 | 17.14 | | 7.62 | | YES |
| CL230-5067-7-50 | 20 | DX10M-20SE (50) | 27.45 | 20.95 | 33.35 | 11.43 | 27.45 | |
| CL230-5068-0-50 | | DX10M-26SE (50) | 31.26 | 24.76 | 37.16 | 15.24 | 31.26 | |
| CL230-5069-2-50 | 36 | DX10M-36SE (50) | 37.61 | 31.11 | 43.51 | 21.59 | 37.61 | |
| CL230-5070-1-50 | 50 | DX10M-50SE (50) | 46.50 | 40.00 | 52.40 | 30.48 | 46.50 | |
| CL230-5071-4-50 | 68 | DX10M-68SE (50) | 57.93 | 51.43 | 63.83 | 41.91 | 57.93 | |

## PCB Layout (Recommended board thickness:1.6mm)

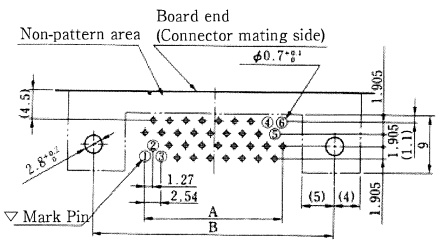


(20, 36, 68 pins)

① Contact No.1
② Contact No.2
③ Contact No.3
④ Contact No.(N-2)
⑤ Contact No.(N-1)
⑥ Contact No.(N)
※N: Numbers of Pin

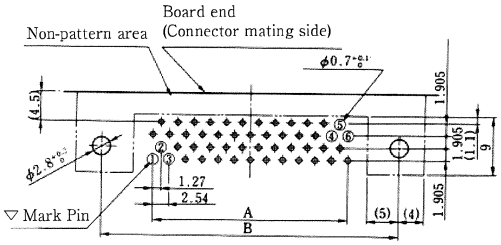


(14, 26, 50 pins)

① Contact No.1
② Contact No.2
③ Contact No.3
④ Contact No.(N-2)
⑤ Contact No.(N-1)
⑥ Contact No.(N)
※N: Numbers of Pin

Unit: mm

| No. of pin | A | B |
|---|---|---|
| 14 | 7.62 | 23.64 |
| 20 | 11.43 | 27.45 |
| 26 | 15.24 | 31.26 |
| 36 | 21.59 | 37.61 |
| 50 | 30.48 | 46.50 |
| 68 | 41.91 | 57.93 |

## Panel-Fitting Dimensional Drawing (Recommended panel thickness:max. 1.6mm)

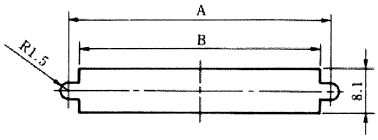


Unit: mm

| No. of pin | A | B |
|---|---|---|
| 14 | 23.64 | 19.99 |
| 20 | 27.45 | 23.80 |
| 26 | 31.26 | 27.60 |
| 36 | 37.61 | 33.90 |
| 50 | 46.50 | 42.80 |
| 68 | 57.93 | 54.23 |

The product information in this catalog is for reference only. Please request the Engineering Drawing for the most current and accurate design information.
All non-RoHS products have been discontinued, or will be discontinued soon. Please check the products status on the Hirose website RoHS search at www.hirose-connectors.com, or contact your Hirose sales representative.

# 5. One Touch Lock, Receptacle Straight Type

## Ordering Information

DX 20 ※ M — 50 S (50)

(1) (2) (3) (1) (4) (5) (6)

1) Series number: DX-M
2) Wiring style
   20: Straight dip
3) Lock style
   Blank: One Touch Lock Type
4) Number of positions: 14, 20, 26, 36, 50, 68
5) Type of aperture
   S: Receptacle connector
6) Individual specifications
   (50): Dip portion gold plated

## Material Treatment

| Item | Material | Remarks |
|---|---|---|
| Receptacle case | Zinc alloy die cast | Nickel plating |
| Shell | Steel | Nickel plating |
| Insulators | PBT resin | Black (UL94V-0) |
| Female terminal | Copper alloy | Selective gold plating |

## 5.1 Receptacle Straight Type

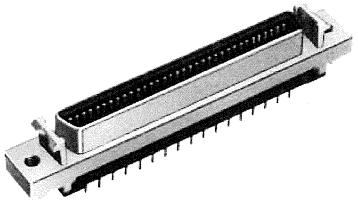

DX20M-68S (50)

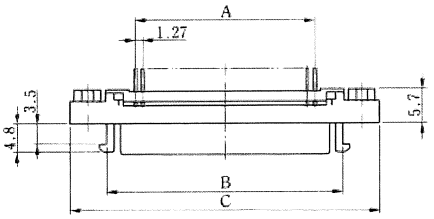


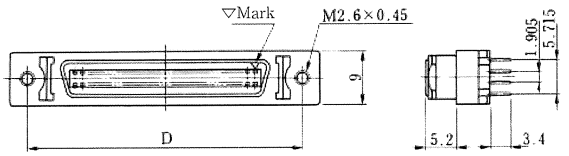


■ Connector mounting condition

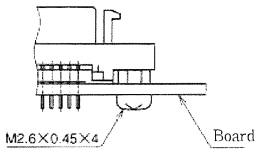


Note: Fasten the printed circuit board with screws using a tightening torque of 0.3 to 0.4 N.m.

Unit: mm

| HRS No. | No.of pin | Parts No. | A | B | C | D | RoHS |
|---|---|---|---|---|---|---|---|
| CL230-5012-5-50 | 14 | DX20M-14S (50) | 7.62 | 17.14 | 29.54 | 23.64 | YES |
| CL230-5013-8-50 | 20 | DX20M-20S (50) | 11.43 | 20.95 | 33.35 | 27.45 | |
| CL230-5014-0-50 | 26 | DX20M-26S (50) | 15.24 | 24.76 | 37.16 | 31.26 | |
| CL230-5015-3-50 | 36 | DX20M-36S (50) | 21.59 | 31.11 | 43.51 | 37.61 | |
| CL230-5016-6-50 | 50 | DX20M-50S (50) | 30.48 | 40.00 | 52.40 | 46.50 | |
| CL230-5017-9-50 | 68 | DX20M-68S (50) | 41.91 | 51.43 | 63.83 | 57.93 | |

## PCB Layout
### (Recommended board thickness:1.6mm)

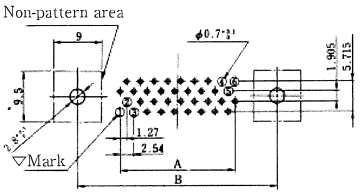


(20, 36, 68 pins)

① Contact No.1
② Contact No.2
③ Contact No.3
④ Contact No.(N-2)
⑤ Contact No.(N-1)
⑥ Contact No.(N)
※N: Numbers of Pin

Unit: mm

| No. of pin | A | B |
|---|---|---|
| 20 | 11.43 | 27.45 |
| 36 | 21.59 | 37.61 |
| 68 | 41.91 | 57.93 |

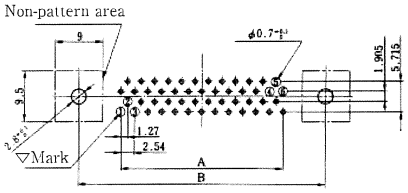


(14, 26, 50 pins)

① Contact No.1
② Contact No.2
③ Contact No.3
④ Contact No.(N-2)
⑤ Contact No.(N-1)
⑥ Contact No.(N)
※N: Numbers of Pin

Unit: mm

| No. of pin | A | B |
|---|---|---|
| 14 | 37.61 | 33.90 |
| 26 | 46.50 | 42.80 |
| 68 | 57.93 | 54.23 |

## Panel-Fitting Dimensional Drawing
### (Recommended panel thickness:max. 1.6mm)

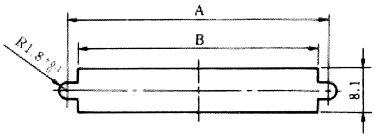


Unit: mm

| No. of pin | A | B |
|---|---|---|
| 14 | 23.64 | 19.99 |
| 20 | 27.45 | 23.8 |
| 26 | 31.26 | 27.6 |
| 36 | 37.61 | 33.9 |
| 50 | 46.50 | 42.8 |
| 68 | 57.93 | 54.23 |

The product information in this catalog is for reference only. Please request the Engineering Drawing for the most current and accurate design information.
All non-RoHS products have been discontinued, or will be discontinued soon. Please check the products status on the Hirose website RoHS search at www.hirose-connectors.com, or contact your Hirose sales representative.

# 6. One Touch Lock Receptacle Flat Ribbon Cable Type

## Ordering Information

DX 33 A M — 68 S (50)

(1) (2) (3) (1) (4) (5) (6)

1) Series No.: DX--M
2) Connector style
   33: Flat IDC type
   (for ribbon cable use)
3) Applicable cable
   A: AWG#28
4) No. of pins 36, 50, 68
5) Mating type
   S: Receptacle
6) Individual specifications
   (50):Dip portion gold plated

## Material Treatment

| Item | Material | Remarks |
|---|---|---|
| Receptacle case | Zinc alloy die cast | Nickel plating |
| Shell | Steel | Nickel plating |
| Insulators | PBT resin | Black (UL94V-0) |
| Female terminal | Copper alloy | Selective gold plating |

## 6.1 Receptacle, Flat Ribbon Cable Type

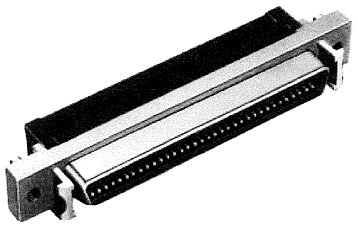

DX33AM-68S (50)

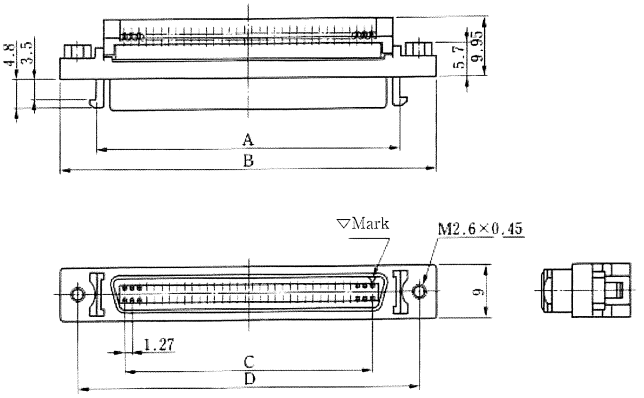


Unit: mm

| HRS No. | No. of pin | Parts No. | A | B | C | D | RoHS |
|---|---|---|---|---|---|---|---|
| CL230-5095-2-50 | 36 | DX33AM-36S (50) | 31.11 | 43.51 | 21.59 | 37.61 | YES |
| CL230-5092-4-50 | 50 | DX33AM-50S (50) | 40.00 | 52.40 | 30.48 | 46.50 | |
| CL230-5062-3-50 | 68 | DX33AM-68S (50) | 51.43 | 63.83 | 41.91 | 57.93 | |

## Panel-Fitting Dimensional Drawing (Recommended panel thickness:max. 1.6mm)

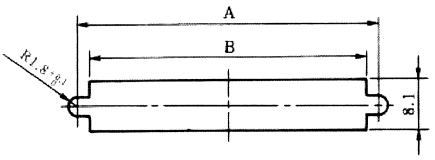


Unit: mm

| No. of pin | A | B |
|---|---|---|
| 36 | 37.61 | 33.90 |
| 50 | 46.50 | 42.80 |
| 68 | 57.93 | 54.23 |

The product information in this catalog is for reference only. Please request the Engineering Drawing for the most current and accurate design information.
All non-RoHS products have been discontinued, or will be discontinued soon. Please check the products status on the Hirose website RoHS search at www.hirose-connectors.com, or contact your Hirose sales representative.

# 7. Screw Lock Type, Plug Cover

## Ordering Information

DX30M — 110 — CV1

(1) (2) (3)

1) Series No.: DX30M
2) No. of pins: 68, 80, 100, 110
3) Cover case type
   CV1: Overmold cover case
   CV2: Die cast cover

## Material Treatment

| Item | Material | Remarks |
|---|---|---|
| Overmold cover | Stainless steel, Synthetic resin | Dark grey |
| Die cast cover | Zinc alloy die cast | Silver coated |

## 1.1 Overmold Cover

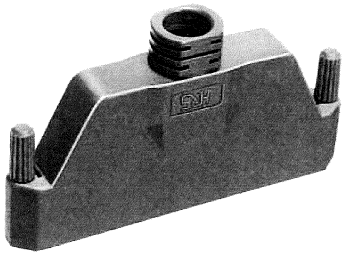

DX30M-100-CV1

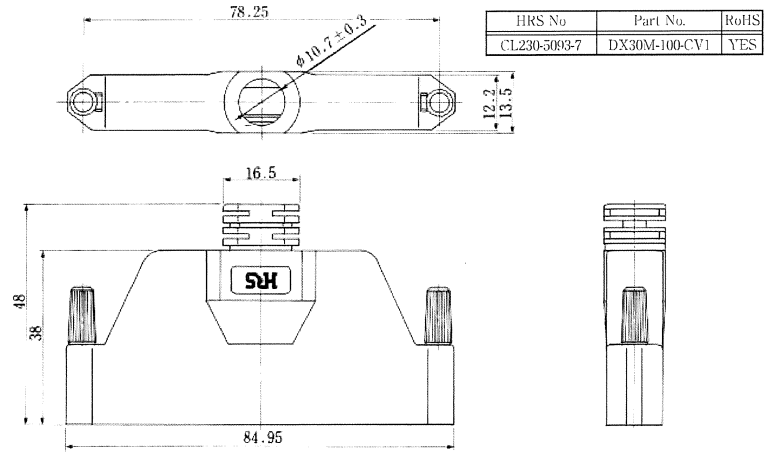


| HRS No | Part No. | RoHS |
|---|---|---|
| CL230-5093-7 | DX30M-100-CV1 | YES |

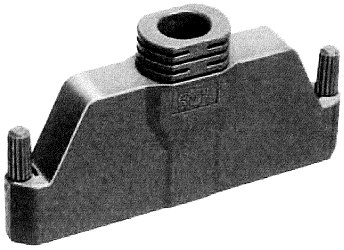

DX30M-110-CV1

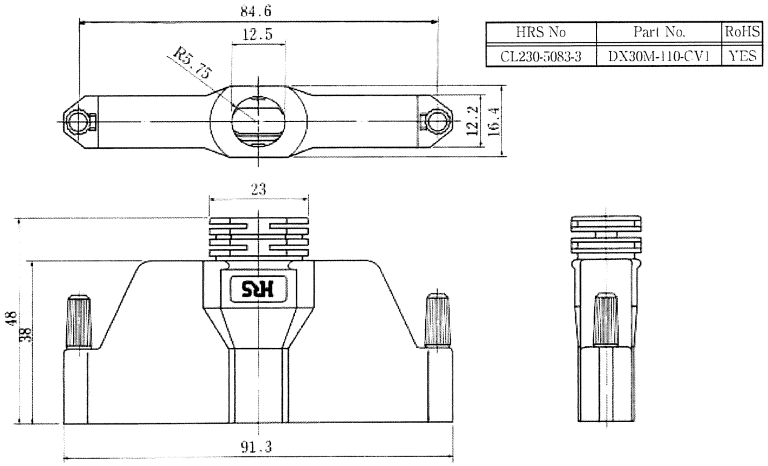


| HRS No | Part No. | RoHS |
|---|---|---|
| CL230-5083-3 | DX30M-110-CV1 | YES |

## List of Engagement Combinations

| Cover case and plug unit | Receptacle | |
|---|---|---|
| | Right angle type | Ferrite core type |
| DX30M-100-CV1 + DX30AM-100P | DX10AM-100SE2 (50), DX10AM-100SE1 (50) | DX10AMF-100SE1 (50) |
| DX30M-110-CV1 + DX30AM-110P | DX10AM-110SE2 (50), DX10AM-110SE1 (50) | — |

The product information in this catalog is for reference only. Please request the Engineering Drawing for the most current and accurate design information.
All non-RoHS products have been discontinued, or will be discontinued soon. Please check the products status on the Hirose website RoHS search at www.hirose-connectors.com, or contact your Hirose sales representative.

## 7.2 Die Cast Cover

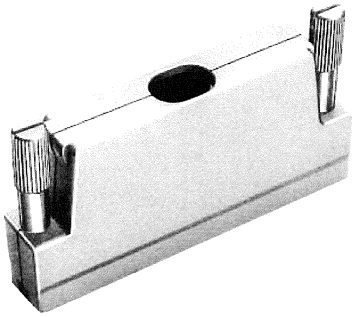

DX30M-68-CV2

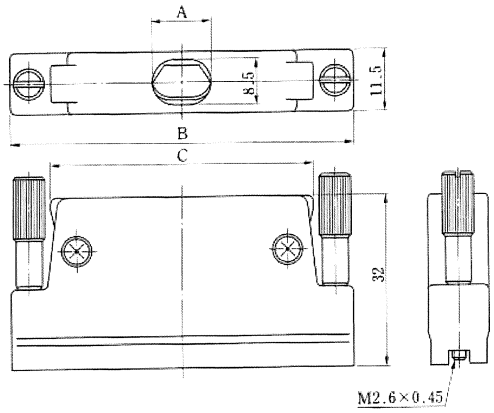


Unit: mm

| HRS No. | No. of pin | Parts No. | A | B | C | Applicable plug unit IDC type | RoHS |
|---|---|---|---|---|---|---|---|
| CL230-5059-9 | 68 | DX30M-68-CV2 | 11.00 | 64.93 | 49.68 | DX30AM-68P | YES |
| CL230-5060-8 | 80 | DX30M-80-CV2 | 12.50 | 72.55 | 57.30 | DX30AM-80P | |
| CL230-5061-0 | 100 | DX30M-100-CV2 | 14.00 | 85.25 | 70.00 | DX30AM-100P | |

## List of Engagement Combinations

| Cover case and plug unit | Receptacle | | |
|---|---|---|---|
| | Right angle type | Straight DIP type | Ribbon cable type |
| DX30M-68-CV2 + DX30AM-68P | DX10BM-68S (50), DX10BM-68SE (50) | DX20BM-68S (50) | DX33AM-68S-LNA (50) |
| DX30M-80-CV2 + DX30AM-80P | DX10BM-80S (50), DX10BM-80SE (50) | DX20BM-80S (50) | — |
| DX30M-100-CV2 + DX30AM-100P | DX10BM-100S (50), DX10BM-100SE (50) | DX20BM-100S (50) | — |

The product information in this catalog is for reference only. Please request the Engineering Drawing for the most current and accurate design information.
All non-RoHS products have been discontinued, or will be discontinued soon. Please check the products status on the Hirose website RoHS search at www.hirose-connectors.com, or contact your Hirose sales representative.

# 8. Screw Lock, Receptacle Right Angle Type

## Ordering Information

| DX | 10 | B | M | — | 68 | S | E | (50) |
|---|---|---|---|---|---|---|---|---|
| (1) | (2) | (3) | (1) | | (4) | (5) | (6) | (7) |

1) Series No.: DX--M
2) Connector style 10: Right angle type
3) Lock style (Screw lock type)
   A: Receptacle case material — Steel
   B: Receptacle case material — Zinc alloy die cast
4) No. of pins: 68, 80, 100, 110
5) Mating type S: Receptacle
6) Board fitting type
   Blank : Screw on type
   E : Lock pin round type
   E1 : Lock pin harpoon type (Board thickness 1.6mm)
   E2 : Lock pin harpoon type (Board thickness 1.2mm)
7) Individual specifications
   (50) :Dip portion gold plated

## Material Treatment

| Item | Material | Remarks |
|---|---|---|
| Receptacle case | Zinc alloy die cast or steel | Nickel plating |
| Shell | Steel | Nickel plating |
| Insulators | PBT resin | Black (UL94V-0) |
| Female terminal | Copper alloy | Selective gold plating |

## 8.1 Board Screw on Type

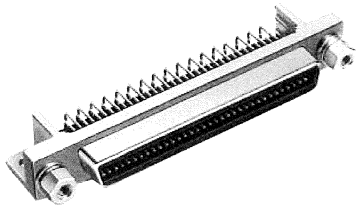

DX10BM-68S (50)

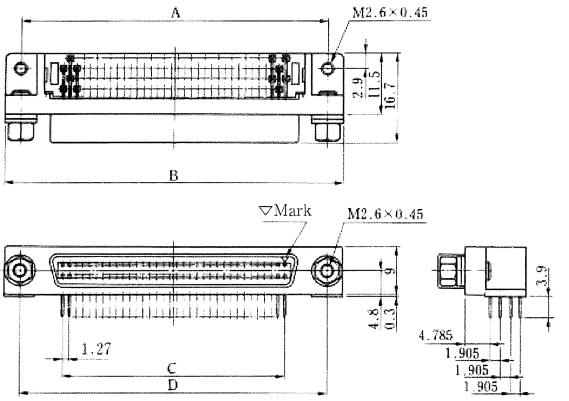


Unit: mm

| HRS No. | No.of pin | Parts No. | A | B | C | D | RoHS |
|---|---|---|---|---|---|---|---|
| CL230-5008-8-50 | 68 | DX10BM-68S (50) | 57.93 | 63.83 | 41.91 | 57.93 | YES |
| CL230-5009-0-50 | 80 | DX10BM-80S (50) | 65.55 | 71.45 | 49.53 | 65.55 | |
| CL230-5010-0-50 | 100 | DX10BM-100S (50) | 78.25 | 84.15 | 62.23 | 78.25 | |

## 8.2 Board Lock Pin Harpoon Type

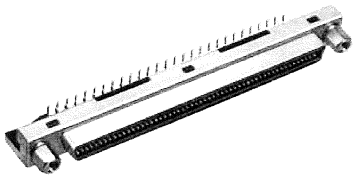

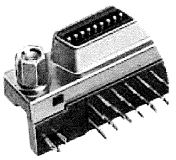

DX10AM-110SE2 (50)

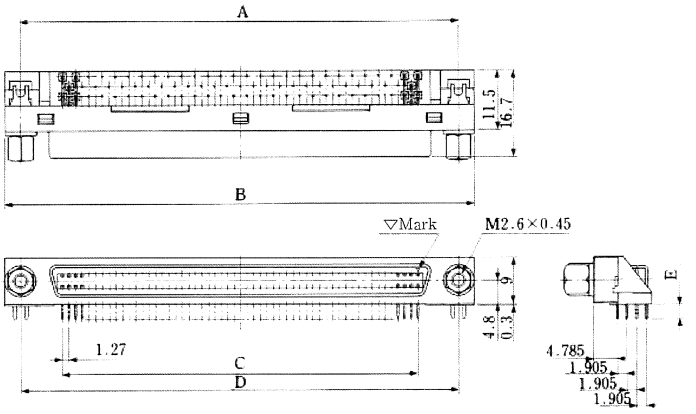


Unit: mm

| HRS No. | No.of pin | Parts No. | A | B | C | D | E | RoHS |
|---|---|---|---|---|---|---|---|---|
| CL230-5137-0-50 | 100 | DX10AM-100SE2 (50) | 78.25 | 84.15 | 62.23 | 78.25 | 2.7 | YES |
| CL230-5089-0-50 | 100 | DX10AM-100SE1 (50) | 78.25 | 84.15 | 62.23 | 78.25 | 3.4 | |
| CL230-5138-3-50 | 110 | DX10AM-110SE2 (50) | 84.60 | 90.50 | 68.58 | 84.60 | 2.7 | |
| CL230-5088-7-50 | 110 | DX10AM-110SE1 (50) | 84.60 | 90.50 | 68.58 | 84.60 | 3.4 | |

The product information in this catalog is for reference only. Please request the Engineering Drawing for the most current and accurate design information.
All non-RoHS products have been discontinued, or will be discontinued soon. Please check the products status on the Hirose website RoHS search at www.hirose-connectors.com, or contact your Hirose sales representative.

## 8.3 Board Lock Pin, Round Type

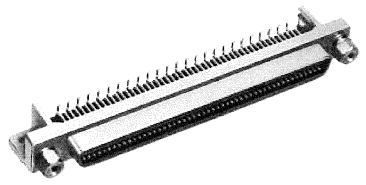

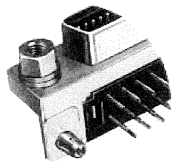

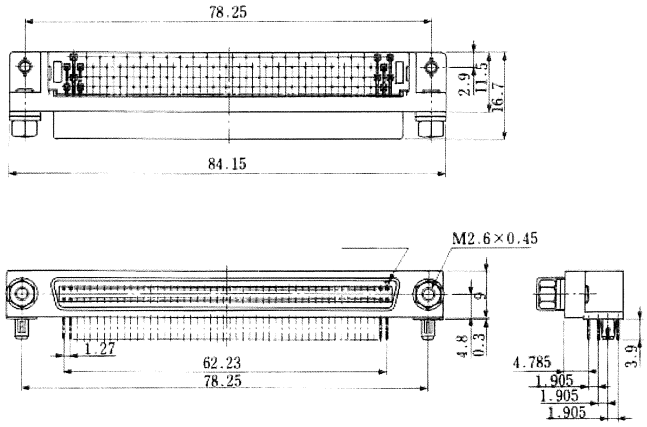


DX10BM-100SE (50)

| HRS No. | Part No. | RoHS |
|---|---|---|
| CL230-5076-8-50 | DX10BM-100SE (50) | YES |

## PCB Layout (Recommended Board Thickness:1.2mm, 1.6mm)

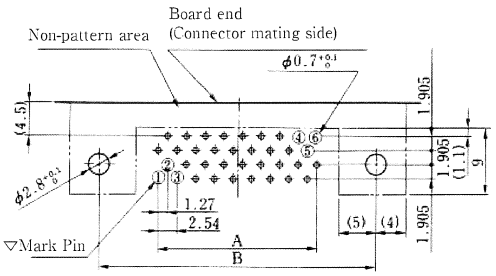


(68, 80, 100 pins)

① Contact No.1
② Contact No.2
③ Contact No.3
④ Contact No.(N-2)
⑤ Contact No.(N-1)
⑥ Contact No.(N)
※N: Numbers of Pin

Unit: mm

| No. of pin | A | B |
|---|---|---|
| 68 | 41.91 | 57.93 |
| 80 | 49.53 | 65.55 |
| 100 | 62.23 | 78.25 |

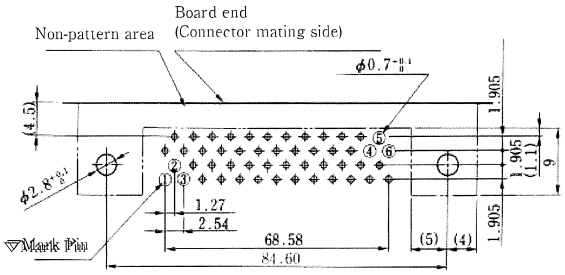


(110 pins)

① Contact No.1
② Contact No.2
③ Contact No.3
④ Contact No.(N-2)
⑤ Contact No.(N-1)
⑥ Contact No.(N)
※N: Numbers of Pin

## Panel-Fitting Dimensional Drawing

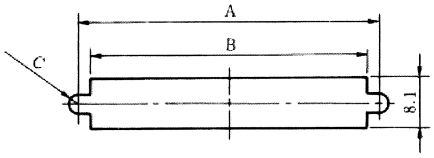


●DX10BM

| Panel thickness | No. of washers |
|---|---|
| 0~t0.4 | 2 |
| t0.8~1.2 | 1 |
| t1.6~2 | No washer |

●DX10AM

| Panel thickness |
|---|
| t0.8~1.2 |

Unit: mm

| No. of Pin | A | B | C | Remarks |
|---|---|---|---|---|
| 68 | 57.93 | 54.23 | R1.85 | DX10BM-68S (50) |
| 80 | 65.55 | 61.85 | R1.85 | DX10BM-80S (50) |
| 100 | 78.25 | 74.55 | R1.85 | DX10BM-100SE (50) |
| 100 | 78.25 | 74.55 | R1.5 | DX10AM-100SE2 (50)<br>DX10BM-100SE1 (50) |
| 110 | 84.5 | 80.8 | R1.5 | DX10AM-110SE2 (50)<br>DX10AM-110SE1 (50) |

The product information in this catalog is for reference only. Please request the Engineering Drawing for the most current and accurate design information.
All non-RoHS products have been discontinued, or will be discontinued soon. Please check the products status on the Hirose website RoHS search at www.hirose-connectors.com, or contact your Hirose sales representative.

# 9. Screw Lock, Receptacle Ferrite Core Type

## Ordering Information

| DX | 10 | A | M | F | — | 100 | S | E1 | (50) |
|---|---|---|---|---|---|---|---|---|---|
| (1) | (2) | (3) | (1) | (4) | | (5) | (6) | (7) | (8) |

1) Series No.: DX--M
2) Connector style
   10: Right angle type
3) Lock style (Screw lock type)
   A: Receptacle case material-steel
4) Board mounting style
   F: Ferrite core type
5) No. of pins: 100
6) Mating type
   S: Receptacle
7) Board fitting type
   E1: Lock pin type (Board thickness 1.6mm)
8) Individual specifications
   (50): Dip portion gold plated

## Material Treatment

| Item | Material | Remarks |
|---|---|---|
| Receptacle case | Steel | Nickel plating |
| Insulator | PBT resin | Black (UL94V-0) |
| Female terminal | Copper alloy | Selective gold plating |
| Ferrite core | — | — |

## 9.1 Right Angle Ferrite Core Type

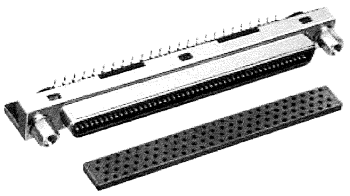

DX10AMF-100SE1(50)

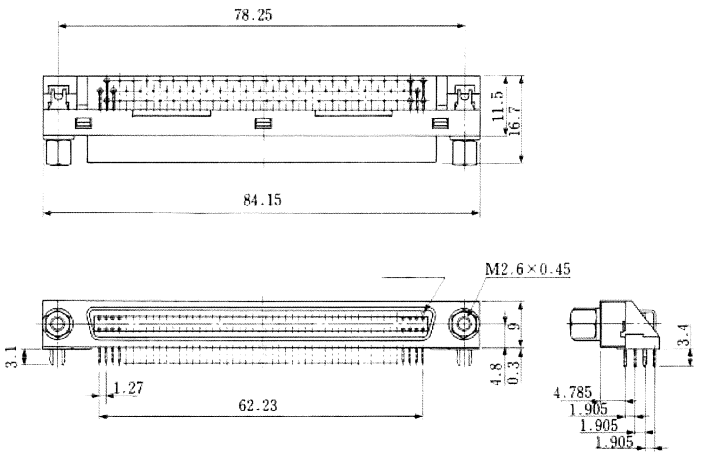


| HRS No | Part No. | RoHS |
|---|---|---|
| CL230-5127-7-50 | DX10AMF-100SE1(50) | YES |

## PCB Layout
### (Recommended Board Thickness:1.6mm)

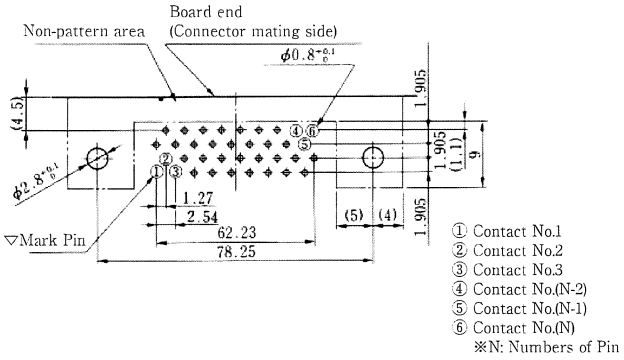


## Panel-Fitting Dimensional Drawing

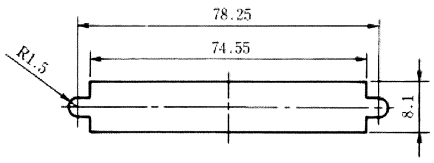


●DX10AMF

| Panel thickness |
|---|
| t0.8~1.2 |

The product information in this catalog is for reference only. Please request the Engineering Drawing for the most current and accurate design information.
All non-RoHS products have been discontinued, or will be discontinued soon. Please check the products status on the Hirose website RoHS search at www.hirose-connectors.com, or contact your Hirose sales representative.

# 11. Screw Lock Receptacle Straight Type

## Ordering Information

DX 20 B M — 80 S (50)

(1) (2) (3) (1) (4) (5) (6)

1) Series No.: DX--M
2) Connector style
   20: Straight dip
3) Lock style
   B: Screw lock type
4) No. of pins: 68, 80, 100
5) Mating type
   S: Receptacle
6) Individual specifications
   (50): Dip portion gold plated

## Material Treatment

| Item | Material | Remarks |
|---|---|---|
| Receptacle case | Zinc alloy die cast | Nickel plating |
| Shell | Steel | Nickel plating |
| Insulator | PBT resin | Black (UL94V-0) |
| Female terminal | Copper alloy | Selective gold plating |

## 11.1 Receptacle Straight Type

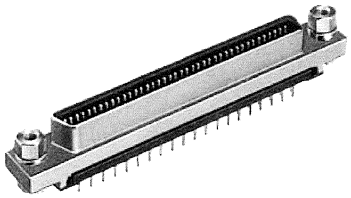

DX20BM-80S (50)

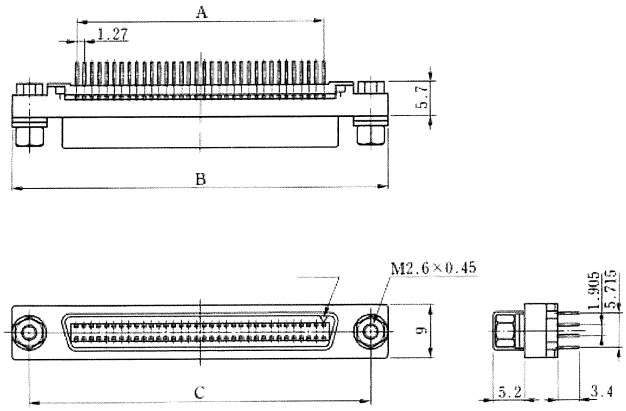


Unit: mm

| HRS No. | No. of pin | Parts No. | A | B | C | RoHS |
|---|---|---|---|---|---|---|
| CL230-5020-3-50 | 68 | DX20BM-68S (50) | 41.91 | 63.83 | 57.93 | YES |
| CL230-5021-6-50 | 80 | DX20BM-80S (50) | 49.53 | 71.45 | 65.55 | |
| CL230-5022-9-50 | 100 | DX20BM-100S (50) | 62.23 | 84.15 | 78.25 | |

## PCB Layout
### (Recommended Board Thickness:1.6mm)

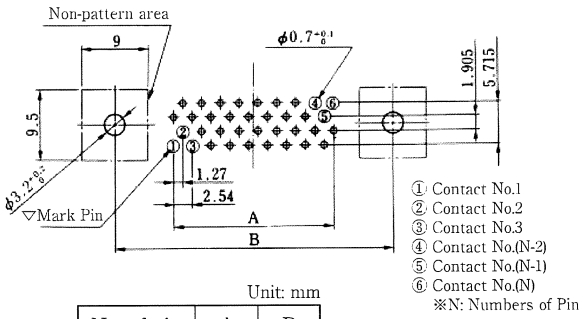


Unit: mm

| No. of pin | A | B |
|---|---|---|
| 68 | 41.91 | 57.93 |
| 80 | 49.53 | 65.55 |
| 100 | 62.23 | 78.25 |

## Panel-Fitting Dimensional Drawing

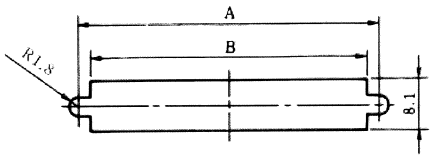


●DX20BM

| Panel thickness | No. of washers |
|---|---|
| 0~t0.4 | 2 |
| t0.8~1.2 | 1 |
| t1.6~2 | No washer |

Unit: mm

| No. of pin | A | B |
|---|---|---|
| 68 | 57.93 | 54.23 |
| 80 | 65.55 | 61.85 |
| 100 | 78.25 | 74.55 |

The product information in this catalog is for reference only. Please request the Engineering Drawing for the most current and accurate design information.
All non-RoHS products have been discontinued, or will be discontinued soon. Please check the products status on the Hirose website RoHS search at www.hirose-connectors.com, or contact your Hirose sales representative.

# 12. Screw Lock Receptacle, Flat Ribbon Cable Type

## Ordering Information

DX 33 A M — 68 S LNA (50)

(1) (2) (3) (1) (4) (5) (6) (7)

1) Series No.: DX--M
2) Connector style
   33: Flat IDC type (for ribbon cable)
3) Applicable wire
   A: AWG#28
4) No. of pins: 68
5) Mating type
   S: Receptacle
6) Board fitting type
   LNA: Screw lock type
7) Individual specifications
   (50) :Dip portion gold plated

## Material Treatment

| Item | Material | Remarks |
|---|---|---|
| Receptacle case | Zinc alloy die cast | Nickel plating |
| Shell | Steel | Nickel plating |
| Insulator | PBT resin | Black (UL94V-0) |
| Female terminal | Copper alloy | Selective gold plating |

## 12.1 Receptacle, Flat Ribbon Cable Type

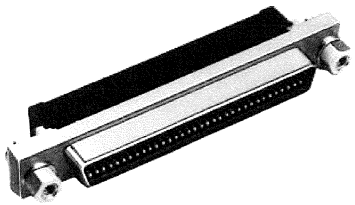

DX33AM-68S-LNA (50)

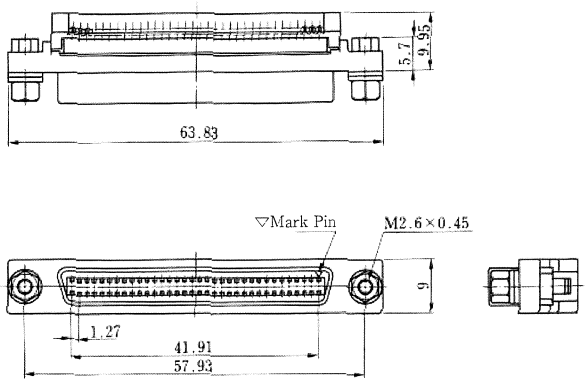


| HRS No. | Part No. | RoHS |
|---|---|---|
| CL230-5078-3-50 | DX33AM-68S-LNA (50) | YES |

## Panel-Fitting Dimensional Drawing

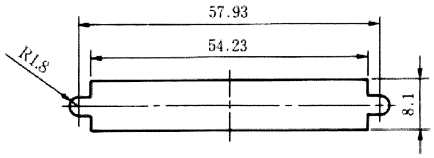


●DX33AM

| Panel thickness | No. of washers |
|---|---|
| 0~t0.4 | 2 |
| t0.8~1.2 | 1 |
| t1.6~2 | No washer |

The product information in this catalog is for reference only. Please request the Engineering Drawing for the most current and accurate design information.
All non-RoHS products have been discontinued, or will be discontinued soon. Please check the products status on the Hirose website RoHS search at www.hirose-connectors.com, or contact your Hirose sales representative.

# 13. Plug Straight Type

## Ordering Information

DX 20E M — 110 P

(1) (2) (1) (3) (4)

1) Series No.: DX--M
2) Connector style
   20E: Straight dip
3) No. of pins: 110
4) Mating type
   P: Plug

## Material Treatment

| Item | Material | Remarks |
|---|---|---|
| Shell | Steel | Nickel plating |
| Insulator | PBT resin | Black (UL94V-0) |
| Male contact | Copper alloy | Selective gold plating |

## 13.1 Plug Straight Type

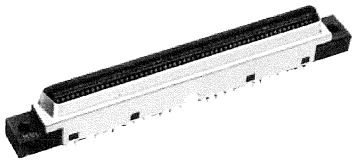

DX20EM-110P

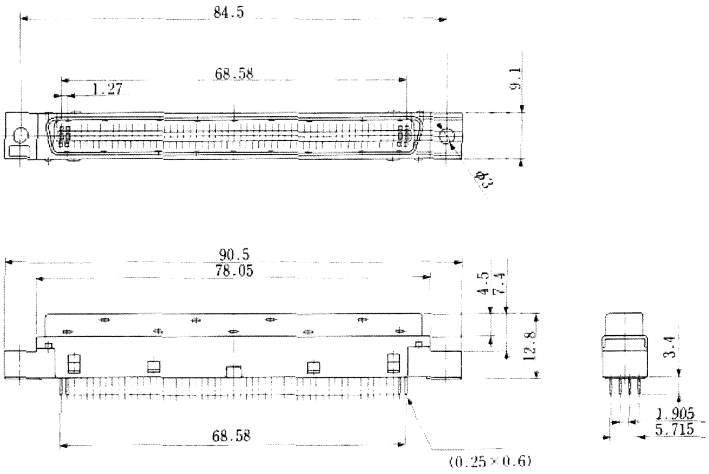


| HRS No. | Part No. | RoHS |
|---|---|---|
| CL230-5094-0 | DX20EM-110P | YES |

## PCB Layout
### (Recommended Board Thickness:1.5mm)

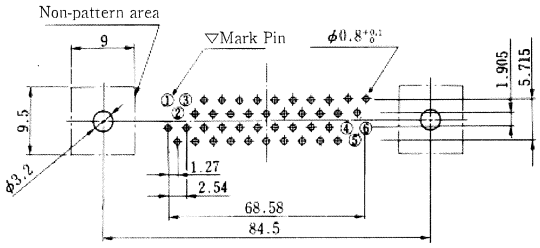


## Diagram of Mounting Conditions for DX20EM

Note: Secure the connectors and boards of this product to the panel.

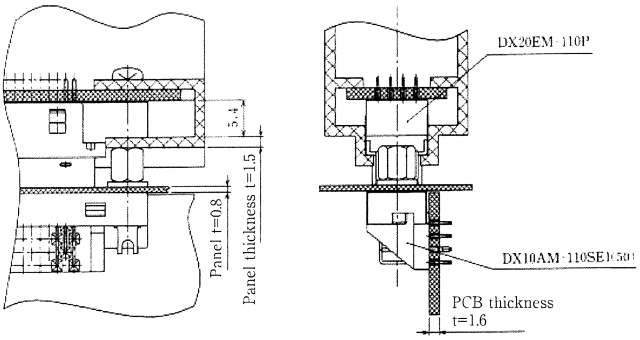


## Panel-Fitting Dimensional Drawing
### (Recommended Panel Thickness:Max.1.5mm)

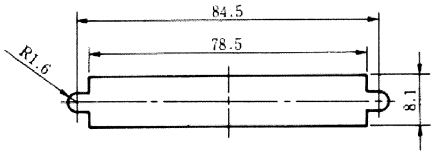


## List of Engagement Combinations

| Plug straight type | Receptacle right angle type |
|---|---|
| DX20EM-110P | DX10AM-110SE1 (50) or DX10AM-110SE2 (50) |

The product information in this catalog is for reference only. Please request the Engineering Drawing for the most current and accurate design information.
All non-RoHS products have been discontinued, or will be discontinued soon. Please check the products status on the Hirose website RoHS search at www.hirose-connectors.com, or contact your Hirose sales representative.

# Connecting Method (Discrete Cable IDC Type)

## Connecting Tools

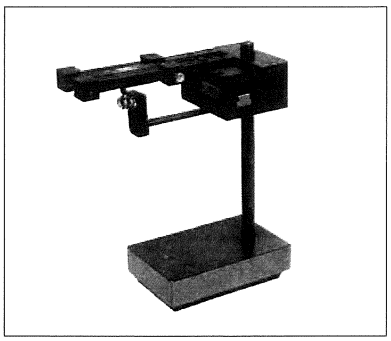

Cable distribution jig

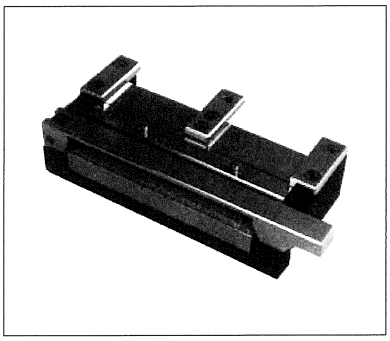

Cable shearing unit

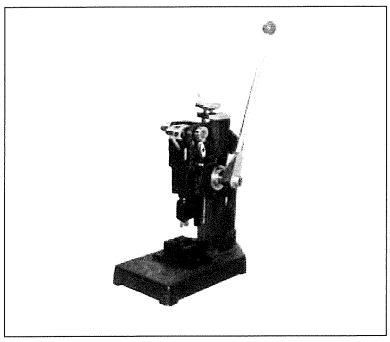

Shield case fixing jig

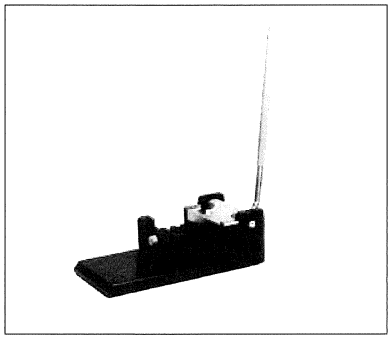

IDC press

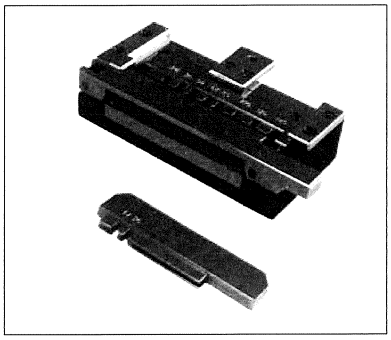

IDC guide plate unit

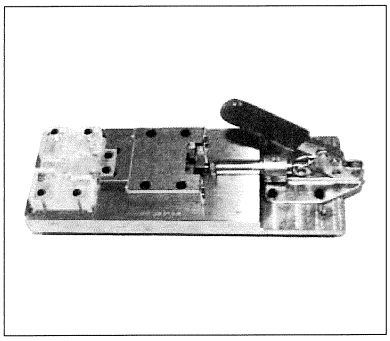

Hood insertion jig

# List of Connecting Jigs and Accessories Plug Connector

## Plug Connector

| Cable | Connector Name | Process | | | | | | |
|---|---|---|---|---|---|---|---|---|
| | | Cable Distribution | Remaining part cutting | | Crimping | | Shield case fixing | Hood insertion |
| | | | Press | Unit | Press | Remaining Part cutting | | |
| I/O Cable (Discrete wire) | DX30AM-14P | By hand DX30AM-CAT1 CL902-2090-0 | DX30AM-HP1 CL902-0210-0 | DX30AM-CU1 CL902-0211-2 | DX30AM-HP1 CL902-0210-0 | DX30AM-GPT1 CL902-0214-0 | Order attachments separately ※1 | Order attachments separately ※2 |
| | DX30AM-20P | | | | | | | |
| | DX30AM-26P | | | | | | DX30AM-CCT1 CL902-0213-8 | DX30AM-HPT1 CL902-0216-6 |
| | DX30AM-36P | | | | | | | |
| | DX30AM-50P | | | | | | | |
| | DX30AM-68P | | | | | | | |
| | DX30AM-80P | | | | | | | |
| | DX30AM-100P | | | | | | | Order attachments separately ※3 |
| | DX30AM-110P | | | | | | | Order attachments separately ※4 |

※1 DX30AM-CCT1 (61) CL902-0213-8 (61)
DX30AM-CCT1 (62) CL902-0213-8 (62)
＊2 DX30AM-HPT1-14 CL902-0217-9
＊3 DX30AM-HPT1-100 CL902-0218-1
＊4 DX30AM-HPT1-110 CL902-0219-4

## Receptacle Connector

| Cable | Connector Name | Press | Guide plate |
|---|---|---|---|
| Ribbon Cable | DX33AM-68S-LNA (50) | Hi-Flex Connecting press HHP-502 CL550-0082-2 | DX33AM-GPA (Come with pressure block) CL902-0233-5 |

Мы молодая и активно развивающаяся компания в области поставок электронных компонентов. Мы поставляем электронные компоненты отечественного и импортного производства напрямую от производителей и с крупнейших складов мира.

Благодаря сотрудничеству с мировыми поставщиками мы осуществляем комплексные и плановые поставки широчайшего спектра электронных компонентов.

Собственная эффективная логистика и склад в обеспечивает надежную поставку продукции в точно указанные сроки по всей России.

Мы осуществляем техническую поддержку нашим клиентам и предпродажную проверку качества продукции. На все поставляемые продукты мы предоставляем гарантию .

Осуществляем поставки продукции под контролем ВП МО РФ на предприятия военно-промышленного комплекса России , а также работаем в рамках 275 ФЗ с открытием отдельных счетов в уполномоченном банке. Система менеджмента качества компании соответствует требованиям ГОСТ ISO 9001.

Минимальные сроки поставки, гибкие цены, неограниченный ассортимент и индивидуальный подход к клиентам являются основой для выстраивания долгосрочного и эффективного сотрудничества с предприятиями радиоэлектронной промышленности, предприятиями ВПК и научно-исследовательскими институтами России.

С нами вы становитесь еще успешнее!

**Наши контакты:**

**Телефон:** +7 812 627 14 35

**Электронная почта:** sales@st-electron.ru

**Адрес:** 198099, Санкт-Петербург, Промышленная ул, дом № 19, литера Н, помещение 100-Н Офис 331