35FS4500, 35FS6500

Grade 0 safety power system basis chip with CAN flexible data transceiver

Rev. 1.0 — 15 December 2017 Short data sheet: advance information

1 General description

The 35FS4500/35FS6500 SMARTMOS devices are a multi-output, power supply, integrated circuit, including CAN Flexible Data (FD) transceiver, dedicated to harsh automotive and transportation markets requiring high reliability (Grade 0) and high functional safety (fit for ASIL D) performance.

Multiple switching and linear voltage regulators, including low-power mode (32 µA) are available with various wake-up capabilities. An advanced power management scheme is implemented to maintain high efficiency over a wide range of input voltages (down to 2.7 V) and output current ranges (up to 1.5 A).

The 35FS4500/35FS6500 includes configurable fail-safe/fail silent safety behavior and features, with two fail-safe outputs, becoming a full part of a safety oriented system partitioning, to reach a high integrity safety level (up to ASIL D).

The built-in CAN FD interface fulfills the ISO 11898-2 and -5 standards.

High temperature capability up to T_A = 150 °C and T_J = 175 °C, compliant with AEC-Q100 Grade 0 automotive qualification.

2 Features

- Battery voltage sensing and MUX output pin
- Highly flexible SMPS pre-regulator, allowing two topologies: non-inverting buck-boost and standard buck
- 36 V maximum input operating voltage
- Family of devices to supply MCU core from 1.0 V to 5.0 V, with SMPS (0.8 A or 1.5 A) or LDO (0.5 A)
- Linear voltage regulator dedicated to auxiliary functions, or to sensor supply (V_{CCA} tracker or independent), 5.0 V or 3.3 V
- Linear voltage regulator dedicated to MCU A/D reference voltage or I/Os supply (V_{CCA}), 5.0 V or 3.3 V
- 3.3 V keep alive memory supply available in low-power mode
- Long duration timer, counting up to 6 months with 1.0 s resolution
- Multiple wake-up sources in low-power mode: CAN, IOs, LDT
- Five configurable I/Os

3 Applications

- T_A up to 150 °C and T_J up to 175 °C
- Drive train electrification (BMS, hybrid EV and HEV, inverter, DCDC, alterno starter)
- Drive train - chassis and safety (active suspension, steering, safety domain gateway)
- Power train (EMS, TCU, gear box)

4 Simplified application diagram

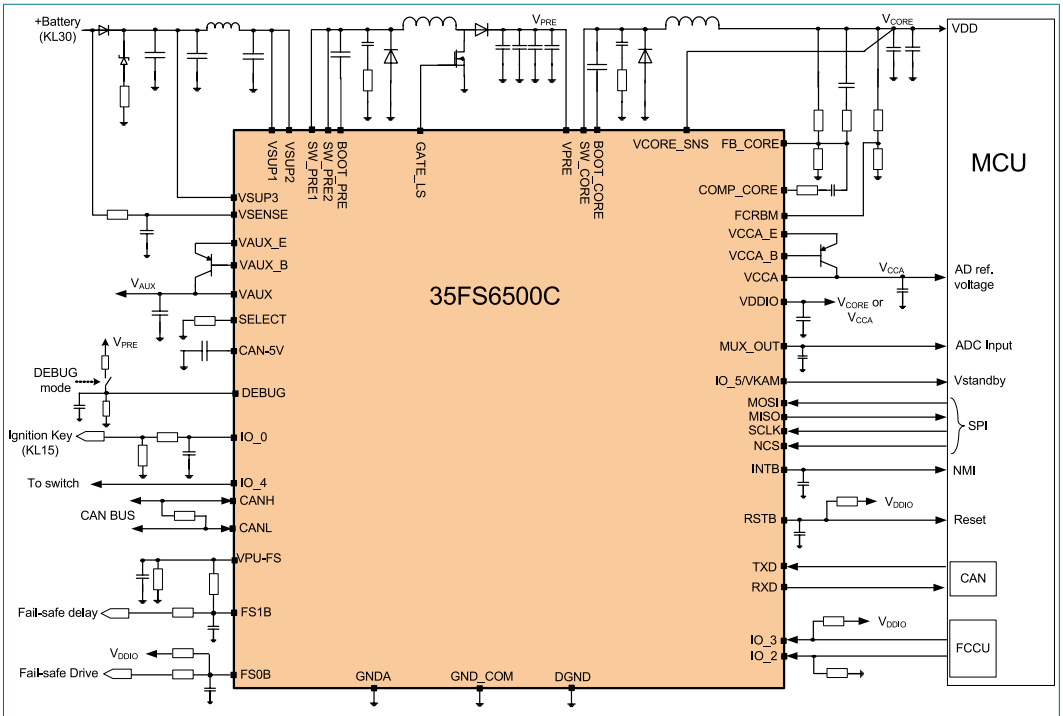

Figure 1. 35FS6500C simplified application diagram - buck boost configuration - FS1B

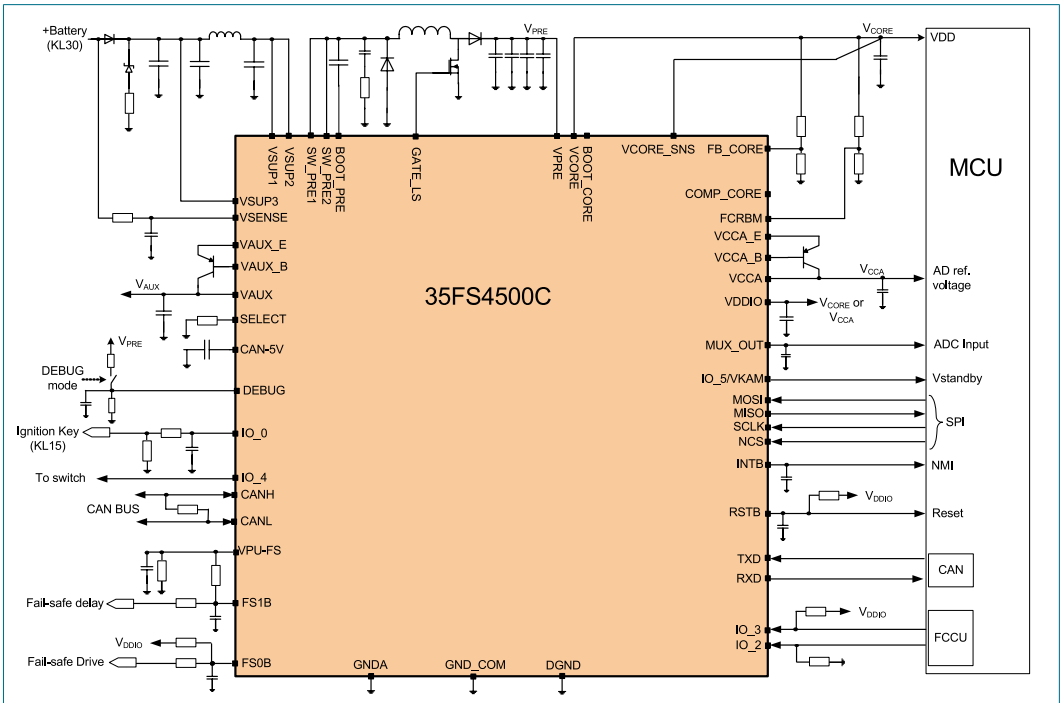

Figure 2. 35FS4500C simplified application diagram - buck boost configuration - FS1B

All information provided in this document is subject to legal disclaimers.

© NXP B.V. 2017. All rights reserved.

5 Ordering information

5.1 Part numbers definition

MC35FS c 5 x y z AE/R2

Table 1. Part number breakdown

Code	Option	Variable	Description
c	4 series	V_{CORE} type	Linear
	6 series		DCDC
x	0	V_{CORE} current	0.5 A or 0.8 A
	1		1.5 A
y	0	Functions	none
	1		FS1B
	2		LDT
	3		FS1B, LDT
z	N	Physical interface	none
	C		CAN FD

5.2 Part numbers list

Table 2. Orderable part variations

Part number	Temperature (T_A)	Package	FS1B	LDT	VCORE	VCORE type	VKAM on	CAN FD	Notes
MC35FS4500CAE	–40 °C to 150 °C	48-pin LQFP exposed pad	0	0	0.5 A	Linear	by SPI	1	[1]
MC35FS4500NAE			0	0	0.5 A	Linear	by SPI	0	
MC35FS4501CAE			1	0	0.5 A	Linear	by SPI	1	
MC35FS4501NAE			1	0	0.5 A	Linear	by SPI	0	
MC35FS4502CAE			0	1	0.5 A	Linear	by SPI	1	
MC35FS4502NAE			0	1	0.5 A	Linear	by SPI	0	
MC35FS4503CAE			1	1	0.5 A	Linear	by SPI	1	
MC35FS4503NAE			1	1	0.5 A	Linear	by SPI	0	

All information provided in this document is subject to legal disclaimers.

© NXP B.V. 2017. All rights reserved.

Part number	Temperature (T_A)	Package	FS1B	LDT	VCORE	VCORE type	VKAM on	CAN FD	Notes
MC35FS6500CAE	–40 °C to 150 °C	48-pin LQFP exposed pad	0	0	0.8 A	DC DC	by SPI	1	[1]
MC35FS6500NAE			0	0	0.8 A	DC DC	by SPI	0	
MC35FS6501CAE			1	0	0.8 A	DC DC	by SPI	1	
MC35FS6501NAE			1	0	0.8 A	DC DC	by SPI	0	
MC35FS6502CAE			0	1	0.8 A	DC DC	by SPI	1	
MC35FS6502NAE			0	1	0.8 A	DC DC	by SPI	0	
MC35FS6503CAE			1	1	0.8 A	DC DC	by SPI	1	
MC35FS6503NAE			1	1	0.8 A	DC DC	by SPI	0	
MC35FS6510CAE			0	0	1.5 A	DC DC	by SPI	1	
MC35FS6510NAE			0	0	1.5 A	DC DC	by SPI	0	
MC35FS6511CAE			1	0	1.5 A	DC DC	by SPI	1	
MC35FS6511NAE			1	0	1.5 A	DC DC	by SPI	0	
MC35FS6512CAE			0	1	1.5 A	DC DC	by SPI	1	
MC35FS6512NAE			0	1	1.5 A	DC DC	by SPI	0	
MC35FS6513CAE			1	1	1.5 A	DC DC	by SPI	1	
MC35FS6513NAE			1	1	1.5 A	DC DC	by SPI	0	

[1] To order parts in tape and reel, add the R2 suffix to the part number.

All information provided in this document is subject to legal disclaimers.

© NXP B.V. 2017. All rights reserved.

6 Block diagram

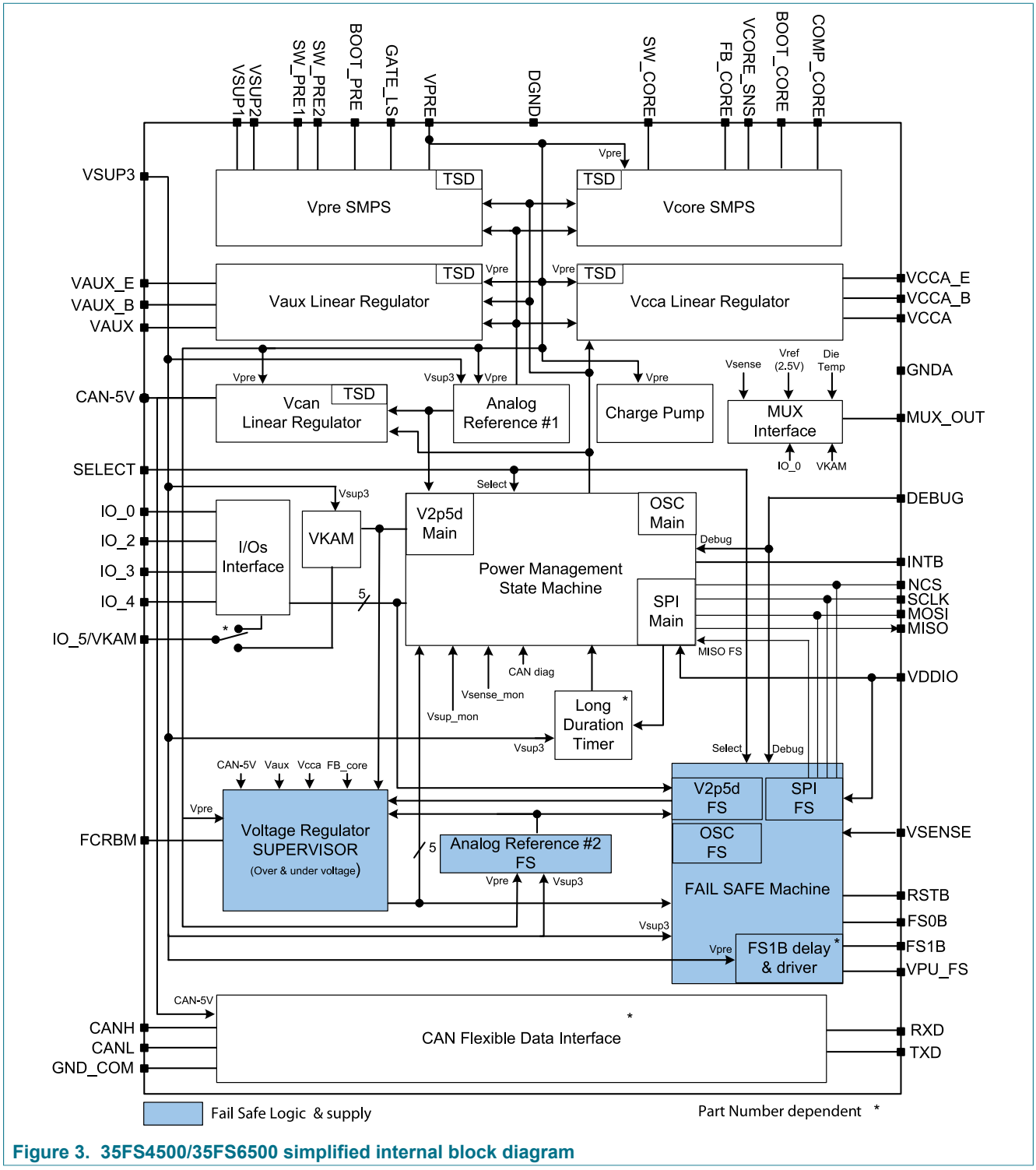

Figure 3. 35FS4500/35FS6500 simplified internal block diagram

All information provided in this document is subject to legal disclaimers.

© NXP B.V. 2017. All rights reserved.

7 Pinning information

7.1 Pinning

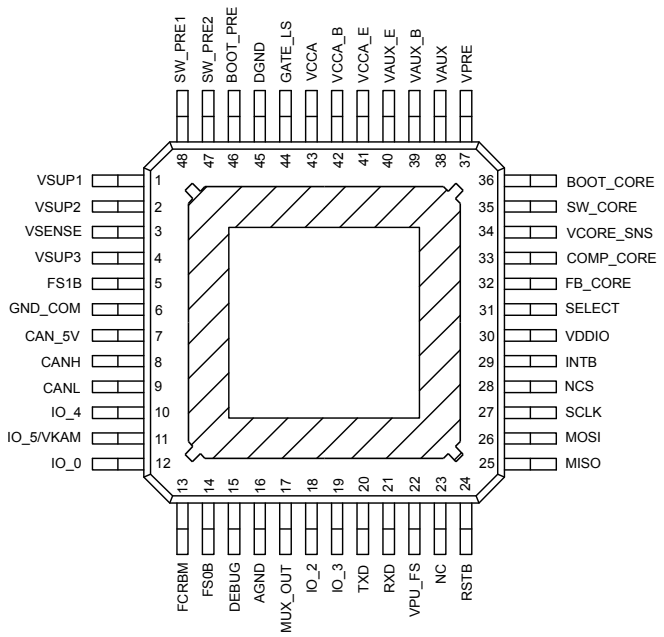

Figure 4. 35FS6500 pinout with CAN and FS1B

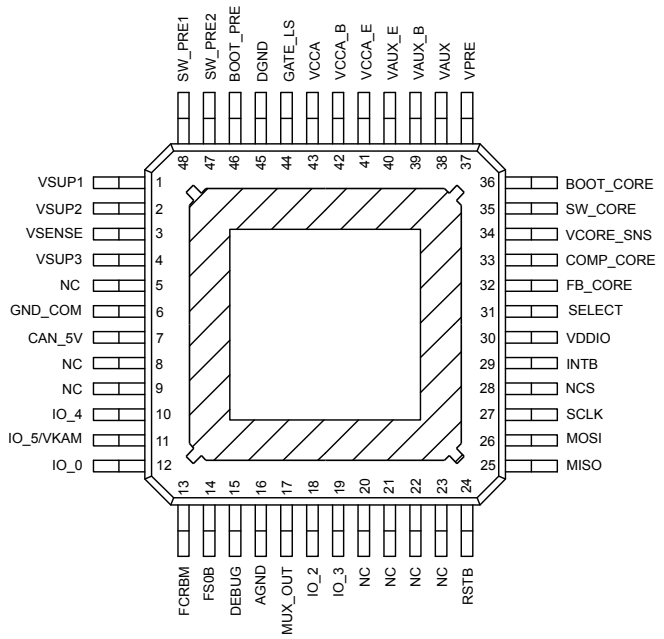

Figure 5. 35FS6500 pinout without CAN

All information provided in this document is subject to legal disclaimers.

© NXP B.V. 2017. All rights reserved.

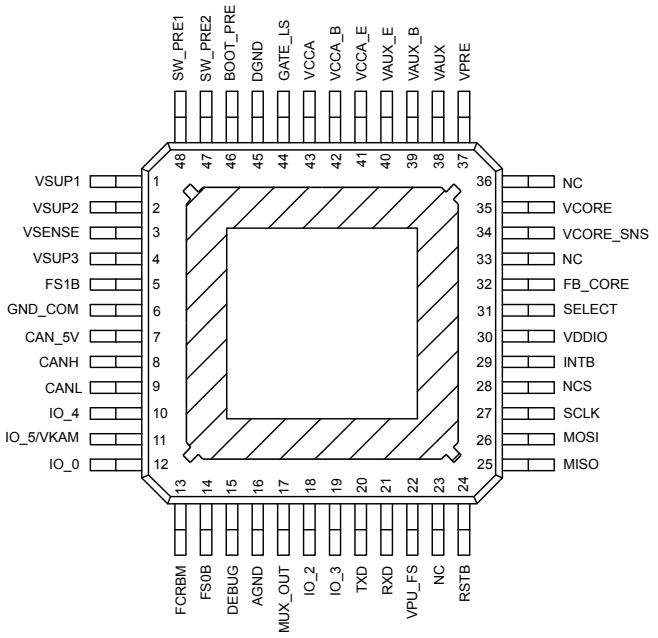

Figure 6. 35FS4500 pinout with CAN and FS1B

7.2 Pin description

Table 3. 35FS4500/35FS6500 pin definition

Pin	Symbol	Type	Definition
1	VSUP1	A_IN	Power supply of the device. An external reverse battery protection diode in series is mandatory.
2	VSUP2	A_IN	Second power supply. Protected by the external reverse battery protection diode used for VSUP1. VSUP1 and VSUP2 must be connected together externally.
3	VSENSE	A_IN	Sensing of the battery voltage. Must be connected prior to the reverse battery protection diode.
4	VSUP3	A_IN	Third power supply dedicated to the device supply. Protected by the external reverse battery protection diode used for VSUP1. Must be connected between the reverse protection diode and the input PI filter.
5	FS1B	D_OUT	Second output of the safety block (active low). The pin is asserted low at start-up and when a fault condition is detected, with a configurable delay or duration versus FS0B output terminal. Open drain structure.
6	GND_COM	GROUND	Dedicated ground for physical layers
7	CAN_5V	A_OUT	Output voltage for the embedded CAN FD interface
8	CANH	A_IN/OUT	CAN output high. If CAN function is not used, this pin must be left open.
9	CANL	A_IN/OUT	CAN output low. If CAN function is not used, this pin must be left open.

All information provided in this document is subject to legal disclaimers.

© NXP B.V. 2017. All rights reserved.

Pin	Symbol	Type	Definition
10	IO_4	D_IN A_OUT	Can be used as digital input (load dump proof) with wake-up capability or as an output gate driver **Digital input:** Pin status can be read through the SPI. Can be used to monitor error signals from another IC for safety purposes (when used in conjunction with IO_5). **Wake-up capability:** Can be selectable to wake-up on edges or levels. **Output gate driver:** Can drive a logic level low-side NMOS transistor. Controlled by the SPI.
11	IO_5/VKAM	A_IN D_IN A_OUT	Can be used as digital input with wake-up capability or as an analog output providing keep alive memory supply in low-power mode. **Analog input:** Pin status can be read through the MUX output terminal. **Digital input:** Pin status can be read through the SPI. Can be used to monitor error signals from another IC for safety purposes (when used in conjunction with IO_4). **Wake-up capability:** Can be selectable to wake-up on edges or levels. **Supply output:** Provide keep alive memory supply in low-power mode.
12	IO_0	A_IN D_IN	Can be used as analog or digital input (load dump proof) with wake-up capability (selectable). **Analog input:** Pin status can be read through the MUX output terminal. **Digital input:** Pin status can be read through the SPI. **Wake-up capability:** Can be selectable to wake-up on edges or levels.
13	FCRBM	A_IN	Feedback core resistor bridge monitoring: For safety purposes, this pin is used to monitor the middle point of a redundant resistor bridge connected on V_{CORE} (in parallel to the one used to set the V_{CORE} voltage). If not used, this pin must be connected directly to FB_CORE.
14	FS0B	D_OUT	First output of the safety block (active low). The pin is asserted low at start-up and when a fault condition is detected. Open drain structure.
15	DEBUG	D_IN	Debug mode entry input
16	AGND	GROUND	Analog ground connection
17	MUX_OUT	A_OUT	Multiplexed output to be connected to a MCU ADC. Selection of the analog parameter is available at MUX-OUT through the SPI.
18 19	IO_2:3	D_IN	Digital input pin with wake-up capability (logic level compatible) **Digital input:** Pin status can be read through the SPI. Can be used to monitor FCCU error signals from MCU for safety purposes. **Wake-up capability:** Can be selectable to wake-up on edges or levels.
20	TXD	D_IN	Transceiver input from the MCU which controls the state of the CAN bus. Internal pull-up to VDDIO. If CAN function is not used, this pin must be left open.
21	RXD	D_OUT	Receiver output which reports the state of the CAN bus to the MCU If CAN function is not used, this pin must be left open.
22	VPU_FS	A_OUT	Pull-up output for FS1B function
23	NC	N/A	Not connected. Pin must be left open.
24	RSTB	D_OUT	This output is asserted low when the safety block reports a failure. The main function is to reset the MCU. Reset input voltage is also monitored in order to detect external reset and fault condition. Open drain structure.
25	MISO	D_OUT	SPI bus. Master input slave output

All information provided in this document is subject to legal disclaimers.

© NXP B.V. 2017. All rights reserved.

Pin	Symbol	Type	Definition
26	MOSI	D_IN	SPI bus. Master output slave input
27	SCLK	D_IN	SPI Bus. Serial clock
28	NCS	D_IN	Not chip select (active low)
29	INTB	D_OUT	This output pin generates a low pulse when an Interrupt condition occurs. Pulse duration is configurable. Internal pull-up to VDDIO.
30	VDDIO	A_IN	Input voltage for MISO output buffer Allows voltage compatibility with MCU I/Os
31	SELECT	D_IN	Hardware selection pin for VAUX and VCCA output voltages
32	FB_CORE	A_IN	VCORE voltage feedback. Input of the error amplifier.
33	COMP_CORE	A_OUT	Compensation network. Output of the error amplifier. For FS4500 series, this pin must be left open (NC).
34	VCORE_SNS	A_IN	VCORE input voltage sense
35	SW_CORE	A_OUT	VCORE output switching point for FS6500 series
	or VCORE	A_OUT	VCORE output voltage for FS4500 series
36	BOOT_CORE	A_IN/OUT	Bootstrap capacitor for VCORE internal NMOS gate drive. For FS4500 series, this pin must be left open (NC).
37	VPRE	A_IN	VPRE input voltage sense
38	VAUX	A_OUT	VAUX output voltage. External PNP ballast transistor. Collector connection
39	VAUX_B	A_OUT	VAUX voltage regulator. External PNP ballast transistor. Base connection
40	VAUX_E	A_OUT	VAUX voltage regulator. External PNP ballast transistor. Emitter connection
41	VCCA_E	A_OUT	VCCA voltage regulator. External PNP ballast transistor. Emitter connection
42	VCCA_B	A_OUT	VCCA voltage regulator. External PNP ballast transistor. Base connection
43	VCCA	A_OUT	VCCA output voltage. External PNP ballast transistor. Collector connection
44	GATE_LS	A_OUT	Low-side MOSFET gate drive for non-inverting buck-boost configuration
45	DGND	GROUND	Digital ground connection
46	BOOT_PRE	A_IN/OUT	Bootstrap capacitor for the VPRE internal NMOS gate drive
47	SW_PRE2	A_OUT	Second pre-regulator output switching point
48	SW_PRE1	A_OUT	First pre-regulator output switching point

All information provided in this document is subject to legal disclaimers.

© NXP B.V. 2017. All rights reserved.

8 Maximum ratings

Table 4. Maximum ratings

All voltages are with respect to ground, unless otherwise specified. Exceeding these ratings may cause a malfunction or permanent damage to the device.

Symbol	Ratings	Value	Unit	Notes
Electrical ratings				
$V_{SUP1/2/3}$	DC voltage at power supply pins	–1.0 to 40	V	[1]
V_{SENSE}	DC voltage at battery sense pin (with ext R in series mandatory)	–14 to 40	V	
$V_{SW1,2}$	DC voltage at SW_PRE1 and SW_PRE2 Pins	–1.0 to 40	V	
V_{PRE}	DC voltage at VPRE Pin	–0.3 to 8	V	
V_{GATE_LS}	DC voltage at Gate_LS pin	–0.3 to 8	V	
V_{BOOT_PRE}	DC voltage at BOOT_PRE pin	–1.0 to 50	V	
V_{SW_CORE}	DC voltage at SW_CORE pin	–1.0 to 8	V	
V_{CORE_SNS}	DC voltage at VCORE_SNS pin	0.0 to 8	V	
V_{BOOT_CORE}	DC voltage at BOOT_CORE pin	0.0 to 15	V	
V_{FB_CORE}	DC voltage at FB_CORE pin	–0.3 to 2.5	V	
V_{COMP_CORE}	DC voltage at COMP_CORE pin	–0.3 to 2.5	V	
V_{FCRBM}	DC voltage at FCRBM pin	–0.3 to 8	V	
$V_{AUX_B,E}$	DC voltage at VAUX_B, VAUX_E pins	–0.3 to 40	V	
V_{AUX}	DC voltage at VAUX pin	–2.0 to 40	V	
$V_{CCA_B,E}$	DC voltage at VCCA_B, VCCA_E pins	–0.3 to 8	V	
V_{CCA}	DC voltage at VCCA pin	–0.3 to 8	V	
V_{DDIO}	DC voltage at VDDIO pin	–0.3 to 8	V	
V_{CAN_5V}	DC voltage on CAN_5V pin	–0.3 to 8	V	
V_{PU_FS}	DC voltage at VPU_FS pin	–0.3 to 8	V	
V_{FSxB}	DC voltage at FS0B, FS1B pins (with ext R in series mandatory)	–0.3 to 40	V	
V_{DEBUG}	DC voltage at DEBUG pin	–0.3 to 40	V	
$V_{IO_0,4}$	DC voltage at IO_0, IO_4 pins (with ext R in series mandatory)	–0.3 to 40	V	
V_{IO_5}	DC voltage at IO_5 pin	–0.3 to 20	V	
V_{KAM}	DC voltage at VKAM pin	–0.3 to 8	V	
V_{DIG}	DC voltage at INTB, RSTB, MISO, MOSI, NCS, SCLK, MUX_OUT, RXD, TXD, IO_2, IO_3 pins	–0.3 to 8	V	
V_{SELECT}	DC voltage at SELECT pin	–0.3 to 8	V	
V_{BUS_CAN}	DC voltage on CANL, CANH pins	–27 to 40	V	
I_I_{SENSE}	V_{SENSE} maximum current capability	–5.0 to 5.0	mA	
$I_IO_{0,4,5}$	IOs maximum current capability (IO_0, IO_4, IO_5)	–5.0 to 5.0	mA	

All information provided in this document is subject to legal disclaimers.

© NXP B.V. 2017. All rights reserved.

Symbol	Ratings	Value	Unit	Notes
ESD voltage				
$V_{ESD-HBM1}$ $V_{ESD-HBM2}$ $V_{ESD-HBM3}$	Human body model (JESD22/A114) – 100 pF, 1.5 kΩ • All pins • VSUP1,2,3, VSENSE, VAUX, IO_0,4, FS0B, FS1B, DEBUG • CANH, CANL	 ±2.0 ±4.0 ±6.0	 kV kV kV	[2]
$V_{ESD-CDM1}$ $V_{ESD-CDM2}$	Charge device model (JESD22/C101): • All pins • Corner pins	 ±500 ±750	 V V	
	System level ESD (gun test) • VSUP1, 2, 3, VSENSE, VAUX, IO_0, 4, 5, FS0B, FS1B			
$V_{ESD-GUN1}$	330 Ω/150 pF unpowered according to IEC61000-4-2	±8.0	kV	
$V_{ESD-GUN2}$	330 Ω/150 pF unpowered according to OEM LIN, CAN, FLexray Conformance	±8.0	kV	
$V_{ESD-GUN3}$	2.0 kΩ/150 pF unpowered according to ISO10605.2008	±8.0	kV	
$V_{ESD-GUN4}$	2.0 kΩ/330 pF powered according to ISO10605.2008 • CANH, CANL	±8.0	kV	
$V_{ESD-GUN5}$	330 Ω/150 pF unpowered according to IEC61000-4-2	±15.0	kV	
$V_{ESD-GUN6}$	330 Ω/150 pF unpowered according to OEM LIN, CAN, FLexray Conformance	±12.0	kV	
$V_{ESD-GUN7}$	2.0 kΩ/150 pF unpowered according to ISO10605.2008	±15.0	kV	
$V_{ESD-GUN8}$	2.0 kΩ/330 pF powered according to ISO10605.2008	±12.0	kV	
Thermal ratings				
T_A	Ambient temperature	–40 to 150	°C	
T_J	Junction temperature	–40 to 175	°C	
T_{STG}	Storage temperature	–55 to 150	°C	
Thermal resistance				
$R_{\theta JA}$	Thermal resistance junction to ambient	30	°C/W	[3]
$R_{\theta JCTOP}$	Thermal resistance junction to case top	23.8	°C/W	[4]
$R_{\theta JCBOTTOM}$	Thermal resistance junction to case bottom	0.9	°C/W	[5]

[1] All VSUPs ($V_{SUP1/2/3}$) must be connected to the same supply
[2] Compared to AGND
[3] Per JEDEC JESD51-6 with the board (JESD51-7) horizontal
[4] Thermal resistance between the die and the case top surface as measured by the cold plate method (MIL SPEC - 883 Method 1012.1).
[5] Thermal resistance between the die and the solder par on the bottom of the packaged based on simulation without any interface resistance.

9 Packaging

9.1 Package mechanical dimensions

Package dimensions are provided in package drawings. To find the most current package outline drawing, go to www.nxp.com and perform a keyword search for the drawing's document number.

All information provided in this document is subject to legal disclaimers.

© NXP B.V. 2017. All rights reserved.

Table 5. Package mechanical dimensions

Package	Suffix	Package outline drawing number
7.0 × 7.0, 48–Pin LQFP exposed pad, with 0.5 mm pitch, and a 4.5 × 4.5 exposed pad	AE	98ASA00173D

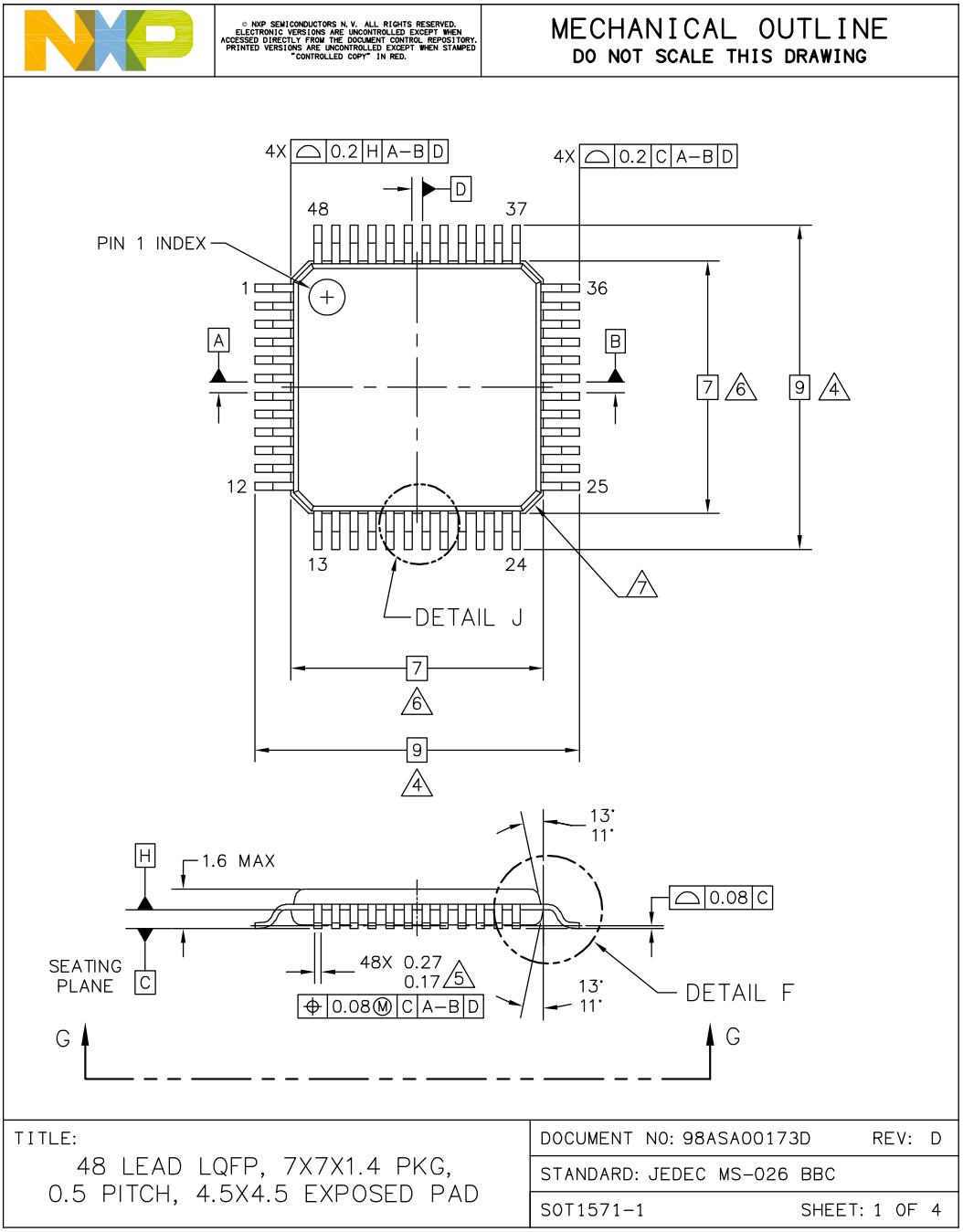

All information provided in this document is subject to legal disclaimers.

© NXP B.V. 2017. All rights reserved.

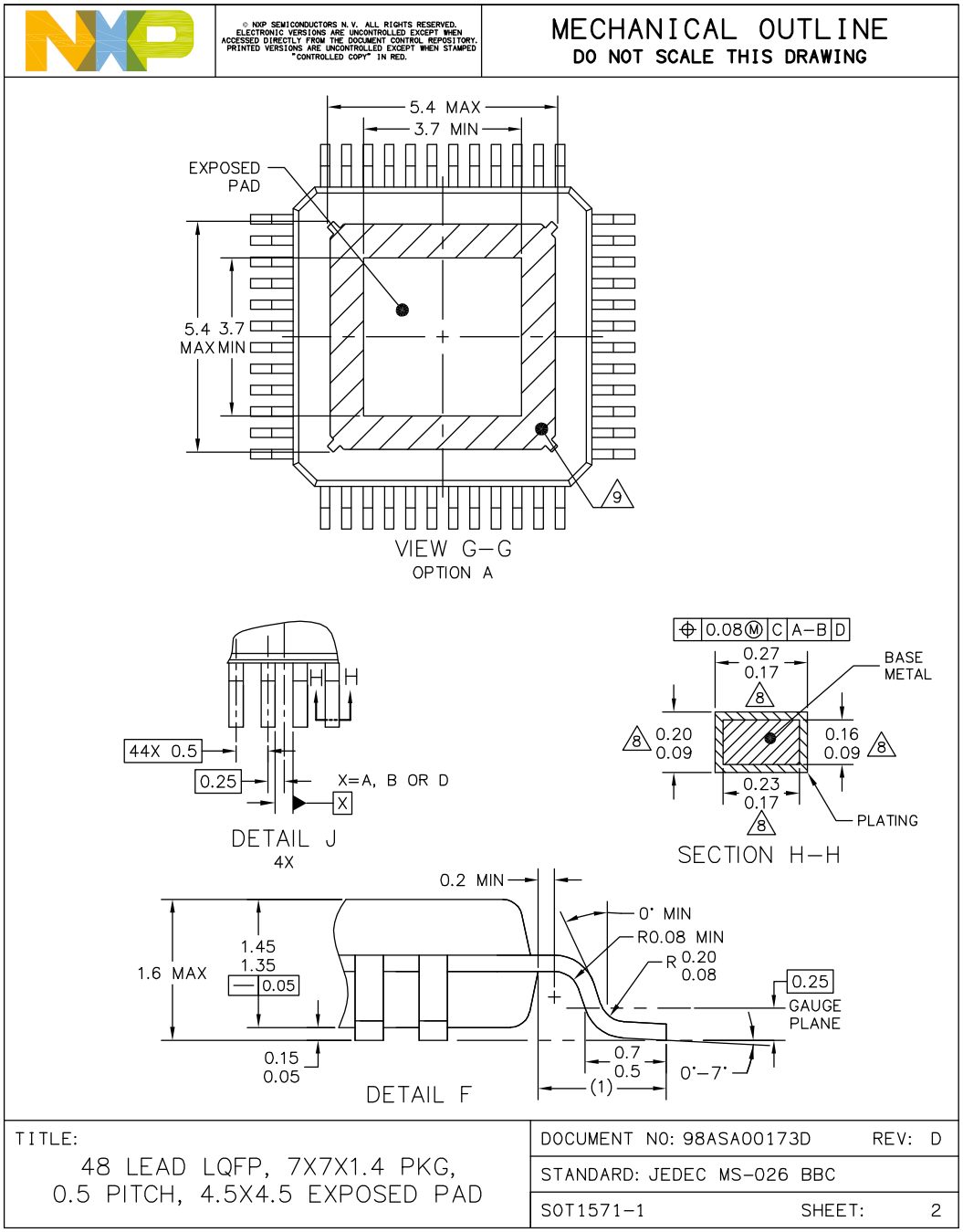

© NXP B.V. 2017. All rights reserved.

© NXP SEMICONDUCTORS N.V. ALL RIGHTS RESERVED.
ELECTRONIC VERSIONS ARE UNCONTROLLED EXCEPT WHEN ACCESSED DIRECTLY FROM THE DOCUMENT CONTROL REPOSITORY.
PRINTED VERSIONS ARE UNCONTROLLED EXCEPT WHEN STAMPED "CONTROLLED COPY" IN RED.

MECHANICAL OUTLINE
DO NOT SCALE THIS DRAWING

NOTES:

1. DIMENSIONS ARE IN MILLIMETERS.
2. DIMENSIONING AND TOLERANCING PER ASME Y14.5M–1994.
3. DATUMS A, B AND D TO BE DETERMINED AT DATUM PLANE H.
4. DIMENSION TO BE DETERMINED AT SEATING PLANE C.
5. THIS DIMENSION DOES NOT INCLUDE DAMBAR PROTRUSION. ALLOWABLE DAMBAR PROTRUSION SHALL NOT CAUSE THE LEAD WIDTH TO EXCEED THE UPPER LIMIT BY MORE THAN 0.08MM AT MAXIMUM MATERIAL CONDITION. DAMBAR CANNOT BE LOCATED ON THE LOWER RADIUS OR THE FOOT. MINIMUM SPACE BETWEEN PROTRUSION AND ADJACENT LEAD SHALL NOT BE LESS THAN 0.07MM.
6. THIS DIMENSION DOES NOT INCLUDE MOLD PROTRUSION. ALLOWABLE PROTRUSION IS 0.25MM PER SIDE. THIS DIMENSION IS MAXIMUM PLASTIC BODY SIZE DIMENSION INCLUDING MOLD MISMATCH.
7. EXACT SHAPE OF EACH CORNER IS OPTIONAL.
8. THESE DIMENSIONS APPLY TO THE FLAT SECTION OF THE LEAD BETWEEN 0.1MM AND 0.25MM FROM THE LEAD TIP.
9. HATCHED AREA TO BE KEEP OUT ZONE FOR PCB ROUTING.

TITLE:	DOCUMENT NO: 98ASA00173D	REV: D
48 LEAD LQFP, 7X7X1.4 PKG, 0.5 PITCH, 4.5X4.5 EXPOSED PAD	STANDARD: JEDEC MS-026 BBC	
	SOT1571-1	SHEET: 3

© NXP B.V. 2017. All rights reserved.

10 References

The following are URLs where you can obtain information on related NXP products and application solutions.

NXP.com support pages	Description	URL
AN5238	Hardware design and product guidelines	http://www.nxp.com/AN5238-DOWNLOAD
AN4388	Quad flat package (QFP)	http://www.nxp.com/files/analog/doc/app_note/AN4388.pdf
Power dissipation tool (Excel file)		http://www.nxp.com/files/analog/software_tools/FS6500-FS4500-power-dissipation-calculator.xlsx
V_{CORE} compensation network simulation tool (CNC)		Upon demand
FMEDA	35FS6500/35FS4500 FMEDA	Upon demand
35FS4500-35FS6500SMUG	35FS4500/35FS6500 Safety Manual – user guide	https://www.nxp.com/webapp/Download?colCode=35FS4500-35FS6500SMUG
FS6500-FS4500	Power System Basis Chip with CAN Flexible Data and LIN Transceivers data sheet	https://www.nxp.com/webapp/Download?colCode=FS6500-FS4500
KITFS4503CAEEVM	FS4500 evaluation board with FS1B	http://www.nxp.com/KITFS4503CAEEVM
KITFS6523CAEEVM	FS6500 evaluation board with FS1B	http://www.nxp.com/KITFS6523CAEEVM
35FS4500 product summary page		http://www.nxp.com/FS4500
35FS6500 product summary page		http://www.nxp.com/FS6500
Analog power management home page		http://www.nxp.com/products/power-management

11 Revision history

Table 6. Revision history

Document ID	Release date	Data sheet status	Change notice	Supersedes
35FS4500-35FS6500SDS v.1.0	20171215	Data sheet: advance information	—	—

All information provided in this document is subject to legal disclaimers.

© NXP B.V. 2017. All rights reserved.

12 Legal information

12.1 Data sheet status

Document status[1][2]	Product status[3]	Definition
[short] Data sheet: product preview	Development	This document contains certain information on a product under development. NXP reserves the right to change or discontinue this product without notice.
[short] Data sheet: advance information	Qualification	This document contains information on a new product. Specifications and information herein are subject to change without notice.
[short] Data sheet: technical data	Production	This document contains the product specification. NXP Semiconductors reserves the right to change the detail specifications as may be required to permit improvements in the design of its products.

[1] Please consult the most recently issued document before initiating or completing a design.
[2] The term 'short data sheet' is explained in section "Definitions".
[3] The product status of device(s) described in this document may have changed since this document was published and may differ in case of multiple devices. The latest product status information is available on the Internet at URL http://www.nxp.com.

12.2 Definitions

Draft — The document is a draft version only. The content is still under internal review and subject to formal approval, which may result in modifications or additions. NXP Semiconductors does not give any representations or warranties as to the accuracy or completeness of information included herein and shall have no liability for the consequences of use of such information.

Short data sheet — A short data sheet is an extract from a full data sheet with the same product type number(s) and title. A short data sheet is intended for quick reference only and should not be relied upon to contain detailed and full information. For detailed and full information see the relevant full data sheet, which is available on request via the local NXP Semiconductors sales office. In case of any inconsistency or conflict with the short data sheet, the full data sheet shall prevail.

Product specification — The information and data provided in a technical data data sheet shall define the specification of the product as agreed between NXP Semiconductors and its customer, unless NXP Semiconductors and customer have explicitly agreed otherwise in writing. In no event however, shall an agreement be valid in which the NXP Semiconductors product is deemed to offer functions and qualities beyond those described in the technical data data sheet.

12.3 Disclaimers

Limited warranty and liability — Information in this document is believed to be accurate and reliable. However, NXP Semiconductors does not give any representations or warranties, expressed or implied, as to the accuracy or completeness of such information and shall have no liability for the consequences of use of such information. NXP Semiconductors takes no responsibility for the content in this document if provided by an information source outside of NXP Semiconductors. In no event shall NXP Semiconductors be liable for any indirect, incidental, punitive, special or consequential damages (including - without limitation - lost profits, lost savings, business interruption, costs related to the removal or replacement of any products or rework charges) whether or not such damages are based on tort (including negligence), warranty, breach of contract or any other legal theory. Notwithstanding any damages that customer might incur for any reason whatsoever, NXP Semiconductors' aggregate and cumulative liability towards customer for the products described herein shall be limited in accordance with the Terms and conditions of commercial sale of NXP Semiconductors.

Right to make changes — NXP Semiconductors reserves the right to make changes to information published in this document, including without limitation specifications and product descriptions, at any time and without notice. This document supersedes and replaces all information supplied prior to the publication hereof.

Applications — Applications that are described herein for any of these products are for illustrative purposes only. NXP Semiconductors makes no representation or warranty that such applications will be suitable for the specified use without further testing or modification. Customers are responsible for the design and operation of their applications and products using NXP Semiconductors products, and NXP Semiconductors accepts no liability for any assistance with applications or customer product design. It is customer's sole responsibility to determine whether the NXP Semiconductors product is suitable and fit for the customer's applications and products planned, as well as for the planned application and use of customer's third party customer(s). Customers should provide appropriate design and operating safeguards to minimize the risks associated with their applications and products. NXP Semiconductors does not accept any liability related to any default, damage, costs or problem which is based on any weakness or default in the customer's applications or products, or the application or use by customer's third party customer(s). Customer is responsible for doing all necessary testing for the customer's applications and products using NXP Semiconductors products in order to avoid a default of the applications and the products or of the application or use by customer's third party customer(s). NXP does not accept any liability in this respect.

Limiting values — Stress above one or more limiting values (as defined in the Absolute Maximum Ratings System of IEC 60134) will cause permanent damage to the device. Limiting values are stress ratings only and (proper) operation of the device at these or any other conditions above those given in the Recommended operating conditions section (if present) or the Characteristics sections of this document is not warranted. Constant or repeated exposure to limiting values will permanently and irreversibly affect the quality and reliability of the device.

Terms and conditions of commercial sale — NXP Semiconductors products are sold subject to the general terms and conditions of commercial sale, as published at http://www.nxp.com/profile/terms, unless otherwise agreed in a valid written individual agreement. In case an individual agreement is concluded only the terms and conditions of the respective agreement shall apply. NXP Semiconductors hereby expressly objects to applying the customer's general terms and conditions with regard to the purchase of NXP Semiconductors products by customer.

Suitability for use in automotive applications — This NXP Semiconductors product has been qualified for use in automotive applications. Unless otherwise agreed in writing, the product is not designed, authorized or warranted to be suitable for use in life support, life-critical or safety-critical systems or equipment, nor in applications where failure or malfunction of an NXP Semiconductors product can reasonably be expected to result in personal injury, death or severe property or environmental

All information provided in this document is subject to legal disclaimers.

© NXP B.V. 2017. All rights reserved.

damage. NXP Semiconductors and its suppliers accept no liability for inclusion and/or use of NXP Semiconductors products in such equipment or applications and therefore such inclusion and/or use is at the customer's own risk.

Export control — This document as well as the item(s) described herein may be subject to export control regulations. Export might require a prior authorization from competent authorities.

Translations — A non-English (translated) version of a document is for reference only. The English version shall prevail in case of any discrepancy between the translated and English versions.

12.4 Trademarks

Notice: All referenced brands, product names, service names and trademarks are the property of their respective owners.

NXP — is a trademark of NXP B.V.

SafeAssure — is a trademark of NXP B.V.

SMARTMOS — is a trademark of NXP B.V.

All information provided in this document is subject to legal disclaimers.

© NXP B.V. 2017. All rights reserved.

Tables

Tab. 1. Part number breakdown 3
Tab. 2. Orderable part variations 3
Tab. 3. 35FS4500/35FS6500 pin definition 7
Tab. 4. Maximum ratings 10
Tab. 5. Package mechanical dimensions 12
Tab. 6. Revision history 15

Figures

Fig. 1. 35FS6500C simplified application diagram - buck boost configuration - FS1B 2
Fig. 2. 35FS4500C simplified application diagram - buck boost configuration - FS1B 2
Fig. 3. 35FS4500/35FS6500 simplified internal block diagram 5
Fig. 4. 35FS6500 pinout with CAN and FS1B 6
Fig. 5. 35FS6500 pinout without CAN 6
Fig. 6. 35FS4500 pinout with CAN and FS1B 7

All information provided in this document is subject to legal disclaimers.

© NXP B.V. 2017. All rights reserved.

Contents

1 General description 1
2 Features 1
3 Applications 1
4 Simplified application diagram 2
5 Ordering information 3
5.1 Part numbers definition 3
5.2 Part numbers list 3
6 Block diagram 5
7 Pinning information 6
7.1 Pinning 6
7.2 Pin description 7
8 Maximum ratings 10
9 Packaging 11
9.1 Package mechanical dimensions 11
10 References 15
11 Revision history 15
12 Legal information 16

Please be aware that important notices concerning this document and the product(s) described herein, have been included in section 'Legal information'.

© NXP B.V. 2017. **All rights reserved.**

For more information, please visit: http://www.nxp.com
For sales office addresses, please send an email to: salesaddresses@nxp.com

Date of release: 15 December 2017
Document identifier: 35FS4500-35FS6500SDS

Мы молодая и активно развивающаяся компания в области поставок электронных компонентов. Мы поставляем электронные компоненты отечественного и импортного производства напрямую от производителей и с крупнейших складов мира.

Благодаря сотрудничеству с мировыми поставщиками мы осуществляем комплексные и плановые поставки широчайшего спектра электронных компонентов.

Собственная эффективная логистика и склад в обеспечивает надежную поставку продукции в точно указанные сроки по всей России.

Мы осуществляем техническую поддержку нашим клиентам и предпродажную проверку качества продукции. На все поставляемые продукты мы предоставляем гарантию .

Осуществляем поставки продукции под контролем ВП МО РФ на предприятия военно-промышленного комплекса России , а также работаем в рамках 275 ФЗ с открытием отдельных счетов в уполномоченном банке. Система менеджмента качества компании соответствует требованиям ГОСТ ISO 9001.

Минимальные сроки поставки, гибкие цены, неограниченный ассортимент и индивидуальный подход к клиентам являются основой для выстраивания долгосрочного и эффективного сотрудничества с предприятиями радиоэлектронной промышленности, предприятиями ВПК и научно-исследовательскими институтами России.

С нами вы становитесь еще успешнее!

Наши контакты:

Телефон: +7 812 627 14 35

Электронная почта: sales@st-electron.ru

Адрес: 198099, Санкт-Петербург, Промышленная ул, дом № 19, литера Н, помещение 100-Н Офис 331