Connective Peripherals Pte Ltd

USB2-H-1002 Hi-Speed USB to 2-Port RS232 Adapter

Datasheet

Document Reference No.: CP_000012

Version 1.1

Issue Date: 2019-03-08

The USB-COM-PLUS adaptors are a family of communication devices from Connective Peripherals Pte Ltd. This model, USB2-F-1002, provides a simple method of adapting legacy serial devices with RS232 interfaces to modern Hi-Speed USB 2.0 ports by incorporating the FTDI FT2232H bridge chip.

Connective Peripherals Pte Ltd
178 Paya Lebar Road, #07-03 Singapore 409030
Tel.: +65 67430980 Fax: +65 68416071

E-Mail (Support): support@connectiveperipherals.com Web: www.connectiveperipherals.com/products

Neither the whole nor any part of the information contained in, or the product described in this manual, may be adapted or reproduced in any material or electronic form without the prior written consent of the copyright holder. This product and its documentation are supplied on an as-is basis and no warranty as to their suitability for any particular purpose is either made or implied. Connective Peripherals Pte Ltd will not accept any claim for damages howsoever arising as a result of use or failure of this product. Your statutory rights are not affected. This product or any variant of it is not intended for use in any medical appliance, device or system in which the failure of the product might reasonably be expected to result in personal injury. This document provides preliminary information that may be subject to change without notice. No freedom to use patents or other intellectual property rights is implied by the publication of this document. Connective Peripherals Pte Ltd, 178 Paya Lebar Road, #07-03 Singapore 409030. Registered Number: 201617872E

Copyright © Connective Peripherals Pte Ltd

Table of Contents

1 Introduction 4
1.1 Functional Description 4
1.2 LED Description 5
1.3 Block Diagram 5
1.3.1 Block description 6
1.4 Features 6
1.5 Performance Figures 7
1.6 Ordering Information 7
2 Installation 8
2.1 Hardware Installation 8
2.1.1 Mounting 8
2.1.2 Wiring 8
2.2 Device Driver Installation 10
2.2.1 Microsoft Windows 10
2.2.2 Mac OS X, Linux, Windows CE 14
3 Connections 15
3.1 External Connectors 15
3.1.1 USB 15
3.1.2 RS232 15
4 Electrical Details 16
4.1 USB 16
4.2 RS232 16
5 Mechanical Details 17
5.1 Module Mechanical Dimensions 17
5.2 UniClip™ Mechanical Dimensions 18
6 Physical Environment Details 19
6.1 Storage Temperature 19
6.2 Operating Temperature 19
7 Environmental Approvals & Declarations 20

7.1 EMI Compatibility 20
7.2 Safety 20
7.3 Environmental 20
7.4 Reliability 20
7.4.1 MTTF 20
7.5 Import / Export Information 21
8 Troubleshooting 22
8.1 Hardware 22
8.2 Device Driver 22
8.3 Technical Support 23
9 Contact Information 24
Appendix A - List of Figures and Tables 25
List of Figures 25
List of Tables 25
Appendix B - Revision History 26

1 Introduction

1.1 Functional Description

The USB-COM-Plus adaptors are a family of communication devices. This model, USB2-H-1002, provides a simple method of adapting legacy serial devices with RS232 interfaces to modern USB ports. This is accomplished by incorporating the industry standard FTDI FT2232H Hi-Speed USB-Serial bridge chip.

Each USB2-H-1002 adapter contains a small internal electronic circuit board which utilises the FTDI FT2232H, mounted inside a rugged plastic enclosure capable of withstanding industrial temperature ranges. The integrated electronics also include RS232 level shifters and TXD/RXD LEDs to provide a visual indication of data traffic through the adapter.

Figure 1.1 USB2-H-1002

Flexible mounting allows the USB2-H-1002 to be used in a variety of applications, from a portable adapter to accompany a laptop to permanent installations in industrial, commercial and retail locations.

The enclosure incorporates a standard USB-miniB device connector for connection to an upstream host or hub port. RS232-level signals, including modem handshake signals, are available on an industry-standard DE-9P connector. The maximum RS232-level data rate is 1Mbps.

The USB2-H-1002 adapter requires USB device drivers, available free from http://www.ftdichip.com/Drivers/VCP.htm, which are used to make the USB2-H-1002 appear as two Virtual COM Ports (VCP). This allows existing serial communications software, such as HyperTerminal, to exchange data through the USB2-H-1002 to two RS232 peripheral devices.

1.2 LED Description

The USB2-H-1002 uses five LEDs to indicate a valid link as well as data traffic according to the following table:

LED Color	Function	Description	quantity
Yellow	Enumerated	ON when the USB2-H-1002 is configured and ready	1
Red	TxD Activity	Flashes when data is transmitted from the USB2-H-1002 to the attached RS232 device	2
Green	RxD Activity	Flashes when data is transmitted from the attached RS232 device to the USB2-H-1002	2

Table 1.1 – LED Description

1.3 Block Diagram

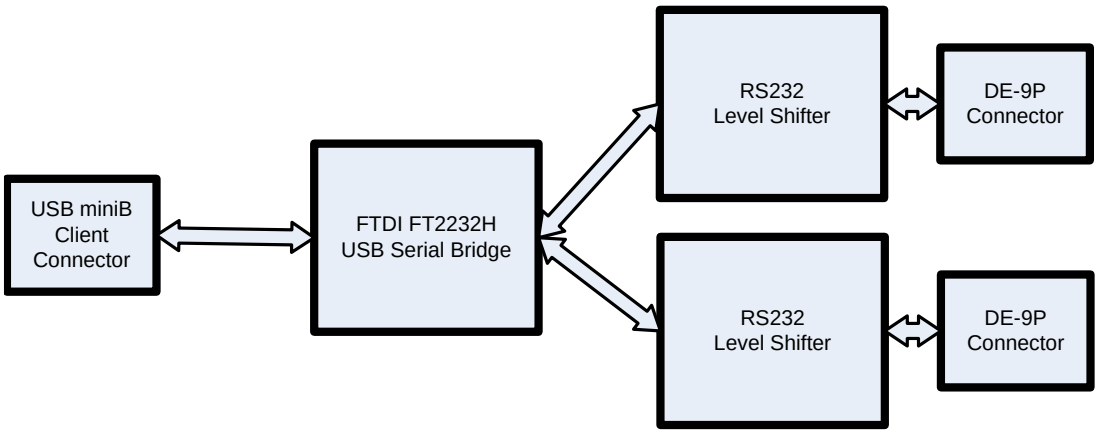

Figure 1.2 USB2-H-1002 Block Diagram

1.3.1 Block description

USB miniB Client Connector

This connector provides the interface for connection to a USB Host or Hub port. A USB-A to USB-miniB cable is provided, though one of a different length may also be used. The maximum cable length is 5 meters, according to the USB 2.0 specification.

FTDI FT2232H

The FTDI FT2232H provides the Hi-Speed USB-to-Serial conversion. Operating system device drivers are required in order to work with the FT2232H to provide dual Virtual COM Port serial functionality.

RS232 Level Shifter

The RS232 level shifter converts the signals provided by the FT2232H into the voltage levels required by RS232 devices.

DE-9P Connector (Male)

The DE-9P connectors are configured in an industry standard (TIA/EIA-574) pin-out to provide connection to RS232 peripherals through standard cables. See section 3.1.2

1.4 Features

- Adds two RS-232 serial port by connecting to a Hi-Speed USB 2.0 Interface
- Easy plug & play installation and RS-232 device connection
- Provides a USB2.0 Hi-Speed(480Mbps) interface and works with USB 1.1, 2.0 and 3.0 Host and Hub ports
- Industry Standard FTDI chip set & device drivers for maximum compatibility
- Microsoft Windows® WHQL-certified, Mac OS X, Linux and Windows CE device drivers
- Installs as two standard Windows COM ports
- COM port number can be changed to any available COM port number, including COM1 to COM4, to support HyperTerminal or any other serial communications software application running in Windows
- Supports latest Windows OS including Windows 10, 8, 7 (32 and 64 bit) with legacy support for older version back to and including XP, Linux, Mac OS X
- FIFO: 4K byte transmit buffer, 4K byte receive buffer for each port
- RS-232 data signals: TxD, RxD, RTS, CTS, DTR, DSR, DCD, RI, GND
- Powered by USB port. No external power adapter required.
- Serial port speed up to 1Mbps
- Serial Communication Parameters
    - Parity: None, Even, Odd
    - Data bits: 7, 8
    - Flow control: RTS/CTS , DTR/DSR, X-ON/X-OFF, None
- Two DE-9P male connectors
- LEDs indicate USB Enumeration, RxD, TxD for monitoring port status & easy diagnostics
- High-temperature plastic enclosure

- Operating temperature of -40°C to +85°C
- USB cable of 0.9 meter included

1.5 Performance Figures

Parameter	Performance
USB Interface	480Mbps USB 2.0 Hi-Speed
RS232 Interface	Standard Windows baud rates (300bps to 921.6Kbps) Custom baud rates (300bps to 1Mbps) through baud rate aliasing. See FTDI Application Note: AN_120_Aliasing_VCP_Baud_Rates

Table 1.2 - Performance Figures

1.6 Ordering Information

Part Number	Description
USB2-H-1002	Hi-Speed USB to 2-Port RS232 Adapter

Table 1.3 - Ordering Information

2 Installation

2.1 Hardware Installation

There are no switches or jumpers to configure on the USB2-H-1002.

2.1.1 Mounting

The USB2-H-1002 is provided with two mounting options: UniClip™ Wall/DIN rail mount and rubber feet. The UniClip Wall/DIN rail mount allows the USB2-H-1002 to be permanently mounted to a wall or attached to a DIN rail. The rubber feet can be used when portable or desktop use is desired. NOTE: The UniClip provides a permanent mounting style. The USB2-H-1002 case may be damaged if the UniClip is removed.

The following figures illustrate the various mounting styles.

Figure 2.1 - USB2-H-1002 with UniClip Brackets

Figure 2.2 - USB2-H-1002 with Rubber Feet

2.1.2 Wiring

A standard 0.9m USB "A" to "miniB" cable is provided.

Insert the A-plug into an available USB Host or Hub port. Insert the miniB-plug into the miniB-receptacle on the USB2-H-1002.

RS232 cables have followed a standard 9-pin configuration on a D-sub connector since the mid-1980s. The USB2-H-1002 follows this standard as a Data Terminal Equipment (DTE) device. If the RS232 equipment being connected is a Data Communication Equipment (DCE) device, it's typical that a straight-through cable can be used.

DTE Pin Number	Signal Name	DCE Pin Number
1	DCD = Data Carrier Detect	1
2	RXD = Receive Data	2
3	TXD = Transmit Data	3
4	DTR = Data Terminal Ready	4
5	GND = RS232 signal ground	5
6	DSR = Data Set Ready	6
7	RTS = Request To Send	7
8	CTS = Clear To Send	8
9	RI – Ring Indicator	9

Table 2.1 – RS232 DTE to DCE connection with straight-through cable

If the USB2-H-1002 is connected to another DTE device, a serial "null-modem" cable is required. A null-modem handles connecting output signals to the corresponding input signals on the other end. Table 2.2 shows a typical null-modem cable. Note that RI and DCD are not always used.

DTE Pin Number	Signal Name	DTE Pin Number
2	RXD = Receive Data	3
3	TXD = Transmit Data	2
4	DTR = Data Terminal Ready	6
5	GND = RS232 signal ground	5
6	DSR = Data Set Ready	4
7	RTS = Request To Send	8
8	CTS = Clear To Send	7

Table 2.2 – RS232 DTE to DTE connection with null-modem cable

Some serial devices may require certain handshake signals be connected. Refer to your device manual for cabling details.

2.2 Device Driver Installation

The USB2-H-1002 adaptor drivers are available for download from here.

2.2.1 Microsoft Windows

With the device drivers being Windows Hardware Quality Labs (WHQL) certified, they are also available through download directly from the Microsoft® Windows® Update service. This is the best choice when connecting the USB2-H-1002 to a computer running Windows Vista. Additional installation options are noted below:

Installation Executable on Windows XP

1) Login to your system as Administrator, or a user with Administrator rights.
2) Prior to connecting the USB2-H-1002 to the USB Host or Hub port, download the latest device driver version from here.
3) Run this executable to install the device drivers.
4) Connect the USB2-H-1002 to your computer. A notification will appear near the task bar indicating that new hardware has been installed and is ready for use. It is normal if this notice appears twice.

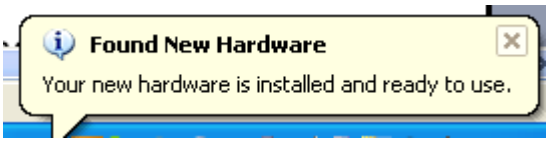

Figure 2.3 - Hardware Ready

Windows Update shown on Windows XP

You must have an active Internet connection and the Windows Update Service enabled.

1) Connect the USB2-H-1002 to your USB Host or Hub.
2) The "Found New Hardware" Wizard will appear. The first dialog should ask whether it is acceptable to use the Windows Update Service to find the device driver.

Figure 2.4 – Found New Hardware Wizard

3) Select one of the "Yes" choices and click "Next".
4) The following screen appears:

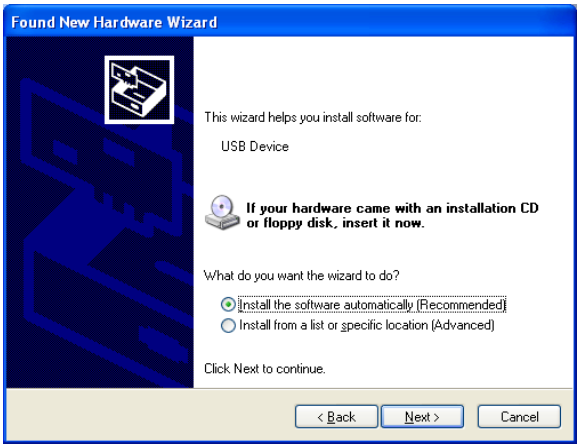

Figure 2.5 – Automatic Install

5) Wait while the driver is found, downloaded, and installed. This step may take a couple minutes depending on the Internet speed.

6) After the files are found and installed, click "Finish" to complete the installation.

Figure 2.6 - Complete Hardware Installation

7) Steps 2 through 6 will repeat. The first time installs the basic USB Serial Converter in the USB device tree. The second time installs the Virtual COM Port layer in the Ports tree and assigns the COM port number. You must install the Virtual COM Port layer twice, because the USB2-H-1002 has two Virtual COM Port.

8) When both portions of the device driver have been installed successfully, the following message will appear, indicating that the device is ready.

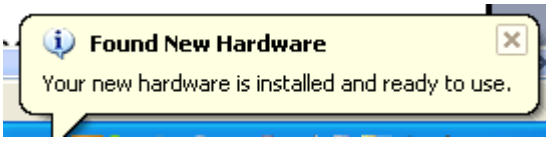

Figure 2.7 - Hardware Ready

COM Port Assignment

Next, to determine which COM port has been assigned, open the Windows Device Manager from the System Control Panel.

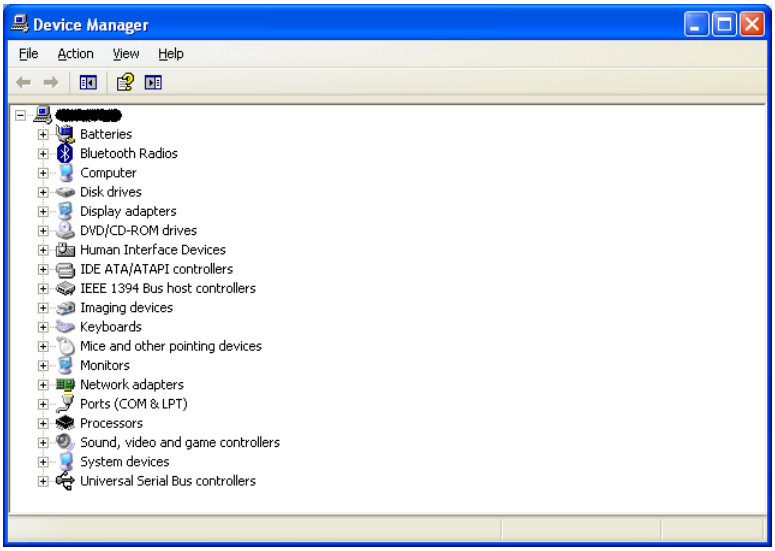

Figure 2.8 - Device Manager

Click on the Plus "+" sign next to the Ports tree to list the available COM port. You will see USB COM Port", followed by a COMn assignment. In the figure below, the USB2-H-1002 is assigned to COM3 and COM4.

Figure 2.9 - COM Port Assignment

Use this COM port number with your application software in order to access the USB2-H-1002.

If an application requires use of a different COM port number, the assignment may be changed through the Advanced Driver Options settings.

From the Device Manager listing above, right-click on the USB COM Port and select Properties.

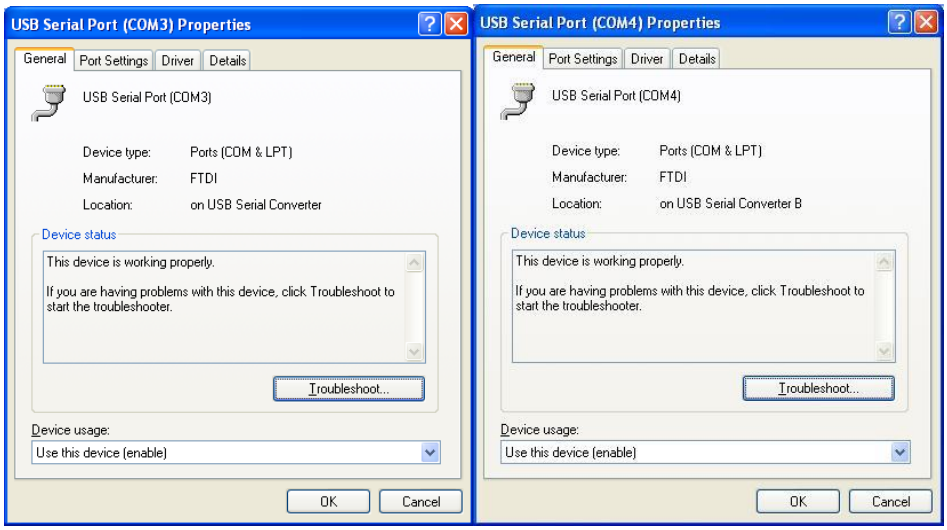

Figure 2.10 – Access COM Port Properties

Next, click on the "Port Settings" tab.

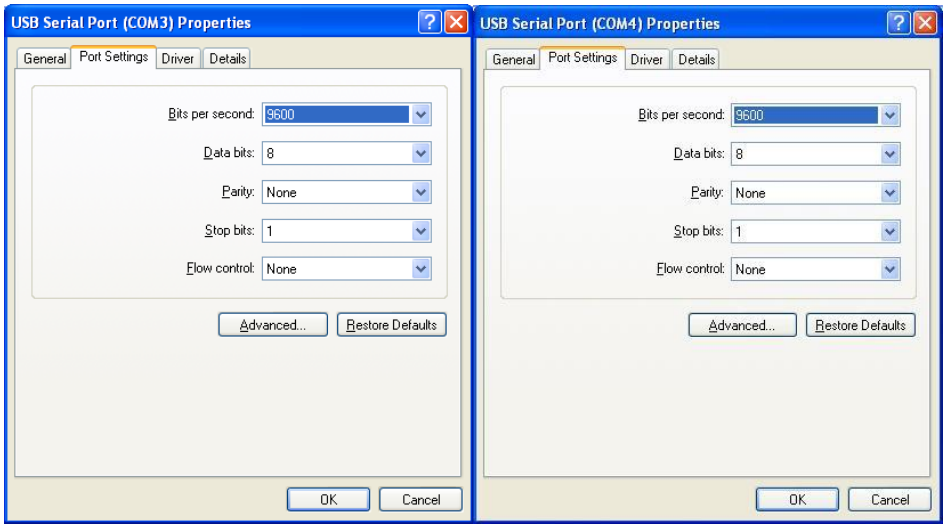

Figure 2.11 - Settings Tab

Then click on the "Advanced…" button.

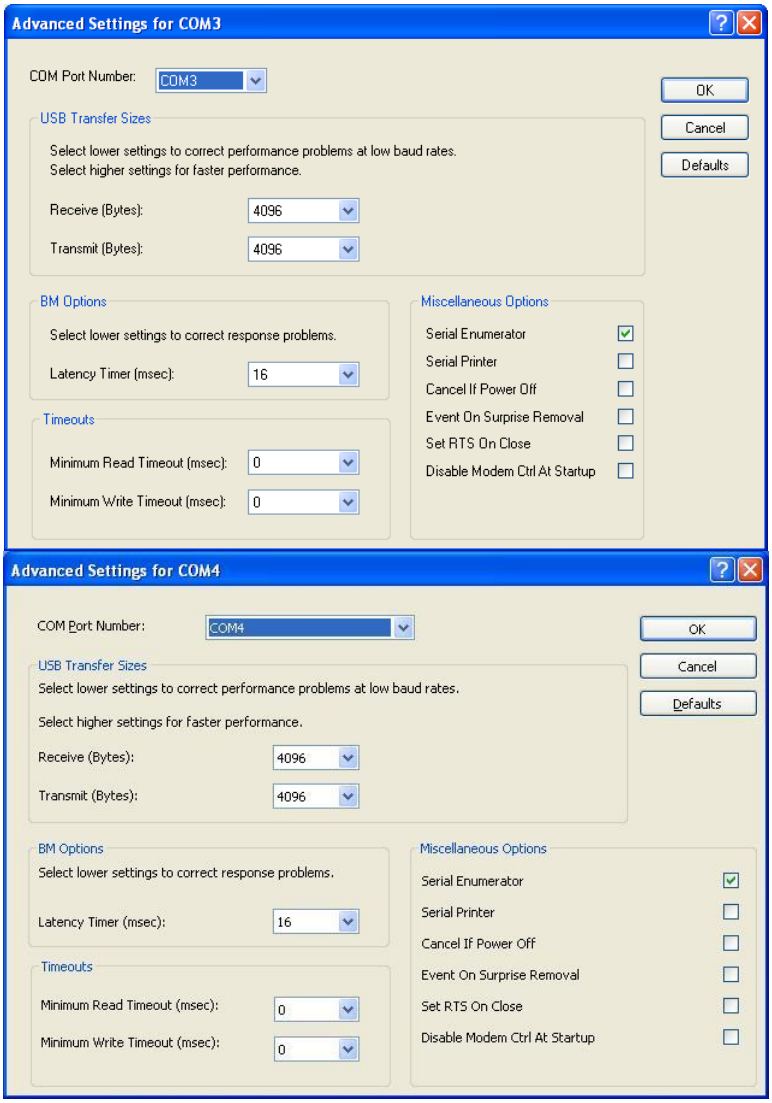

Figure 2.12 - Advanced Options

This will display the various advanced settings. Note the COM port assignment in the upper left. Clicking on the drop-down list will display the available port numbers. Select one that is not in use and click OK on each dialog box to activate the selection. Windows will remember this COM port number.

2.2.2 Mac OS X, Linux, Windows CE

Device drivers and FTDI installation guides for Mac OS X, Linux and Windows CE are available for download on the FTDI web site. Follow the respective FTDI installation guides for the chosen operating system.

3 Connections

3.1 External Connectors

3.1.1 USB

The USB-H-1002 is a USB 2.0 Hi-Speed Device. A standard USB Series "miniB" receptacle is mounted inside the USB-H-1002 to facilitate connection to an upstream USB Host or Hub.

Pin Number	Pin Type	Description
1	Power	VBUS – USB Power provided from upstream USB Host or Hub
2	Bidirectional	D– = USB data signal, negative polarity
3	Bidirectional	D+ = USB data signal, positive polarity
4	ID	ID = Host /slave select pin, Not used
5	Ground	GND = USB signal ground
Shield	Case Ground	Drain = typically connected to the host PC case

Table 3.1 – USB "miniB" Receptacle Pin-Out

3.1.2 RS232

The RS232 ports are configured as Data Terminal Equipment (DTE), with a 9-contact D-Sub Pin connector. Pin assignments are according to TIA/EIA-574 which formally defines the assignments for a COM port found on many personal computers.

Pin Number	Pin Type	Description
1	Input	DCD = Data Carrier Detect
2	Input	RXD = Receive Data
3	Output	TXD = Transmit Data
4	Output	DTR = Data Terminal Ready
5	Ground	GND = RS232 signal ground
6	Input	DSR = Data Set Ready
7	Output	RTS = Request To Send
8	Input	CTS = Clear To Send
9	Input	RI = Ring Indicator
Shield	Case Ground	Drain = typically connected to the host PC case

Table 3.2 – DE-9P RS232 Pin-Out

Copyright © Connective Peripherals Pte Ltd

4 Electrical Details

4.1 USB

Parameter	Description	Minimum	Typical	Maximum	Units	Conditions
USB_VCC	Input Power Voltage*	4.25	5.0*	5.25	V	*Present when the USB cable is attached and the USB Host or Hub is powered.
I_{cc}	USB current		30	50	mA	

Table 4.1 - USB Electrical Details

4.2 RS232

Parameter	Description	Minimum	Typical	Maximum	Units	Conditions
V_{trans}	Transmitter output voltage swing	± 5			V	RL = 3KΩ
V_{rec}	Receiver input voltage range	±2.4		±25	V	Input resistance = 3KΩ to 7KΩ
	ESD HBM		±15		KV	RS-232 Inputs and Outputs

Table 4.2 - RS232 Electrical Details

Copyright © Connective Peripherals Pte Ltd

5 Mechanical Details

5.1 Module Mechanical Dimensions

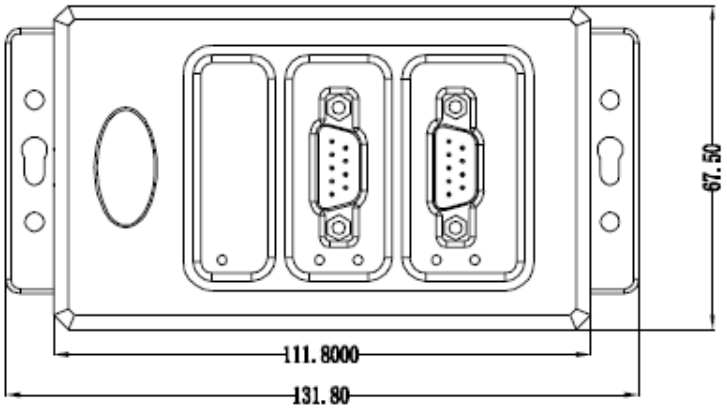

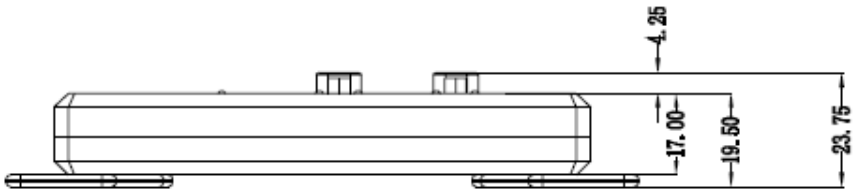

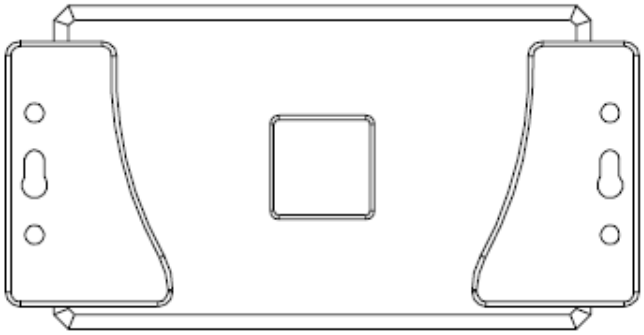

Table 5.1 - USB2-H-1002 Case Dimensions

Dimensions are shown in mm.

5.2 UniClip™ Mechanical Dimensions

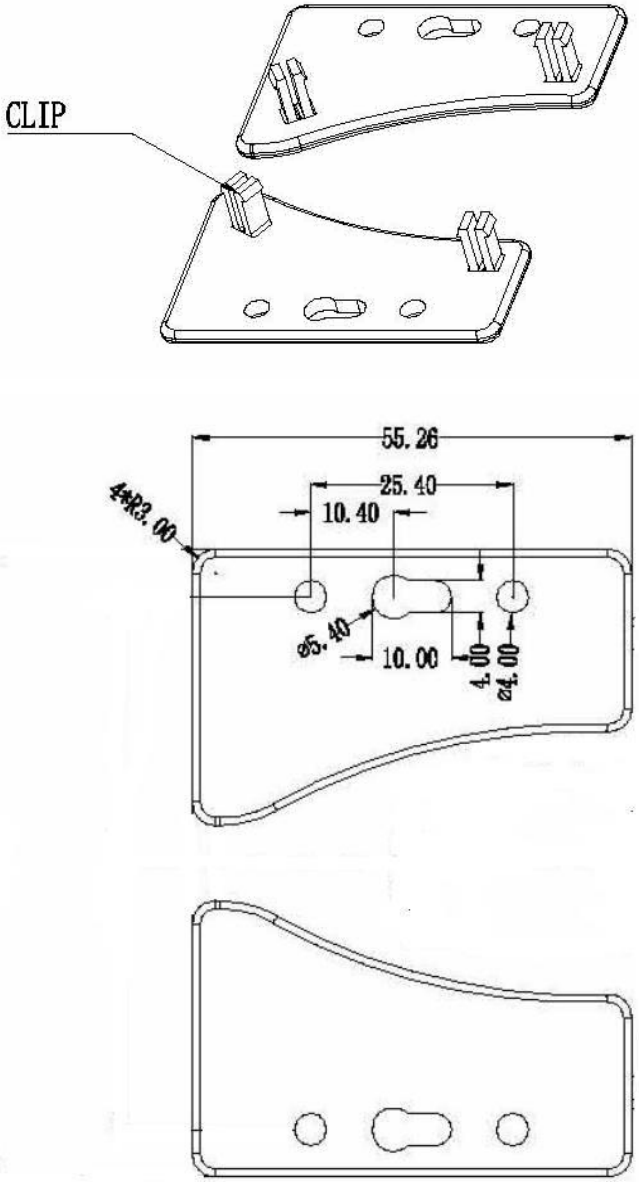

Table 5.2 - USB2-H-1002 UniClip Dimensions

The UniClips are symmetrical. Dimensions (in mm) are shown for one Uniclip only for clarity.

6 Physical Environment Details

6.1 Storage Temperature

Parameter	Description	Minimum	Typical	Maximum	Units	Conditions
T	Storage Temperature Range	TBD		TBD	ºC	

Table 6.1 - Storage Temperature

6.2 Operating Temperature

Parameter	Description	Minimum	Typical	Maximum	Units	Conditions
T	Operating Temperature Range	–40		+85	ºC	5% to 95% RH, non condensing

Table 6.2 - Operating Temperature

Copyright © Connective Peripherals Pte Ltd

7 Environmental Approvals & Declarations

7.1 EMI Compatibility

FCC and CE

The USB2-H-1002 has been tested to be compliant with both FCC Part 15 Subpart B and European EMC Directive.

NOTE: This is a Class B product. In a domestic environment, this product may cause radio interference, in which case the user may be required to take adequate measures.

NOTE: This equipment has been tested and found to comply with the limits for a Class B digital device, pursuant to Part 15 of the FCC Rules. These limits are designed to provide reasonable protection against harmful interference in a residential installation. This equipment generates uses and can radiate radio frequency energy and, if not installed and used in accordance with the instructions, may cause harmful interference to radio communications. However, there is no guarantee that interference will not occur in a particular installation. If this equipment does cause harmful interference to radio or television reception, which can be determined by turning the equipment off and on, the user is encouraged to try to correct the interference by one or more of the following measures:

- Reorient or relocate the receiving antenna.
- Increase the separation between the equipment and receiver.
- Connect the equipment into an outlet on a circuit different from that to which the receiver is connected.
- Consult the dealer or an experienced radio/TV technician for help.

7.2 Safety

The USB2-H-1002 is defined as a Limited Power Supply (LPS) device, with operating voltages under 60VDC.

7.3 Environmental

The USB2-H-1002 is a lead-free device that complies with the following environmental directives: RoHS, WEEE, REACH, PFOS and DecaBDE.

7.4 Reliability

The USB2-H-1002 is designed as a robust USB-Serial adapter for use in many environments. There are no user-serviceable parts. Any failure will require a replacement of the unit.

7.4.1 MTTF

The Mean Time To Failure is calculated at TBD hours.

7.5 Import / Export Information

Import / Export Information	
Country of Origin	China
Harmonized Code	8471.80.1000
Product Description	USB to RS232 Computer Adapter, Two Port
USA ECCN	EAR99 – No License Required

Table 7.1 - Import / Export Information

8 Troubleshooting

8.1 Hardware

Cables are the most common sources of trouble with external devices.

Check the following:

- USB cable is properly inserted at both ends
- Computer power is ON
- Computer is not in Sleep or Standby
- If a USB Hub is used, be sure it is set for "Self-Powered" operation
- If a USB Hub is used, be sure all cables are properly inserted
- If all the above are OK, the Yellow LED should be lit, indicating the device has been recognized by the USB subsystem.

RS232 cables – check the following:

- Output signals (TXD, RTS, DTR) are connected to the respective inputs (RXD, CTS, DSR) in each direction.
- Check for specific handshake requirements of your RS232 peripheral.
- If handshake signals are note used, ensure the application is set to "No Hardware Handshake", or equivalent.
- Test the port with a loop-back connector. Connect TXD to RXD, RTS to CTS and DTR to DSR. Use a simple terminal program to check that data is transmitted and received.

8.2 Device Driver

Ensure the latest device driver is in use. See http://www.ftdichip.com/Drivers/VCP.htm.

If other devices with FTDI chips are installed in the system, check with all manufacturers of these devices for the latest device drivers.

See the FTDI installation guides for additional details: http://ftdichip.com/Documents/InstallGuides.htm

Common Windows Device Driver Troubles:

- DEVICE TIMES OUT: The default settings of the device driver assume typical data transfers of hundreds to thousands or more bytes at a given time. Some applications, such as a GPS device, only send data in short packets, often only a few bytes. If this is the case, it may be necessary to adjust the driver buffer size and/or latency timer to smaller values. These values can be adjusted through the advanced driver options as noted in Figure 2.13. The buffer size can be reduced to 64 bytes. The latency timer can be set as low as 2ms. A setting of 1ms will cause unnecessary USB traffic and could adversely affect data transmission.
- ERRATIC MOUSE POINTER: The device driver defaults to query an attached device to find out whether it is a mouse or modem, consistent with native COM port operation. Some RS232 peripherals constantly send short packets of data, causing the host system to "think" a mouse or modem has been attached. These short packets will interfere with normal mouse operation causing the pointer to jump around the screen. If this happens, disconnect the RS232 device and *uncheck the Serial Enumerator* option, also found on the advanced driver options screen in Figure 2.13.
- COM PORT IN USE: Windows keeps track of all COM port assignments. If multiple products have been connected to a single system, the COM port number will increase, even if the other devices are not attached. If the higher COM port assignments are not acceptable for the application, known unused COM port numbers should be uninstalled according to the FTDI installation guide: http://ftdichip.com/Documents/InstallGuides.htm.

8.3 Technical Support

Technical support may be obtained from your nearest Connective Peripherals office. See details below.

E-Mail (Support): support@connectiveperipherals.com

Web: http://www.connectiveperipherals.com/products

9 Contact Information

Global Headquarters – Singapore

Connective Peripherals Pte Ltd
178 Paya Lebar Road
#07-03
Singapore 409030

Tel: +65 67430980
Fax: +65 68416071

E-Mail (Sales)	sales@connectiveperipherals.com
E-Mail (Support)	support@connectiveperipherals.com
Web Site URL	http://www.connectiveperipherals.com
Web Shop URL	http://www.connectiveperipherals.com

Appendix A - List of Figures and Tables

List of Figures

Figure 1.1 USB2-H-1002 4
Figure 1.2 USB2-H-1002 Block Diagram 5
Figure 2.1 - USB2-H-1002 with UniClip Brackets 8
Figure 2.2 - USB2-H-1002 with Rubber Feet 8
Figure 2.3 - Hardware Ready 10
Figure 2.4 – Found New Hardware Wizard 10
Figure 2.5 – Automatic Install 11
Figure 2.6 - Complete Hardware Installation 11
Figure 2.7 - Hardware Ready 11
Figure 2.8 - Device Manager 12
Figure 2.9 - COM Port Assignment 12
Figure 2.10 – Access COM Port Properties 12
Figure 2.11 - Settings Tab 13
Figure 2.12 - Advanced Options 13

List of Tables

Table 1.1 – LED Description 5
Table 1.2 - Performance Figures 7
Table 1.3 - Ordering Information 7
Table 2.1 – RS232 DTE to DCE connection with straight-through cable 9
Table 2.2 – RS232 DTE to DTE connection with null-modem cable 9
Table 3.1 – USB "miniB" Receptacle Pin-Out 15
Table 3.2 – DE-9P RS232 Pin-Out 15
Table 4.1 - USB Electrical Details 16
Table 4.2 - RS232 Electrical Details 16
Table 5.1 - USB2-H-1002 Case Dimensions 17
Table 5.2 - USB2-H-1002 UniClip Dimensions 18
Table 6.1 - Storage Temperature 19
Table 6.2 - Operating Temperature 19
Table 7.1 - Import / Export Information 21

Copyright © Connective Peripherals Pte Ltd

Appendix B - Revision History

Revision	Changes	Date
1.0	Initial release	2009-07-08
1.01	Modified enclosure colours to silver/black	2010-03-30
1.1	Re-branding to reflect the migration of the product to Connective Peripherals name – logo change, copyright changed, contact information Changed, all internal hyperlinks changed.	2019-03-08

Мы молодая и активно развивающаяся компания в области поставок электронных компонентов. Мы поставляем электронные компоненты отечественного и импортного производства напрямую от производителей и с крупнейших складов мира.

Благодаря сотрудничеству с мировыми поставщиками мы осуществляем комплексные и плановые поставки широчайшего спектра электронных компонентов.

Собственная эффективная логистика и склад в обеспечивает надежную поставку продукции в точно указанные сроки по всей России.

Мы осуществляем техническую поддержку нашим клиентам и предпродажную проверку качества продукции. На все поставляемые продукты мы предоставляем гарантию .

Осуществляем поставки продукции под контролем ВП МО РФ на предприятия военно-промышленного комплекса России , а также работаем в рамках 275 ФЗ с открытием отдельных счетов в уполномоченном банке. Система менеджмента качества компании соответствует требованиям ГОСТ ISO 9001.

Минимальные сроки поставки, гибкие цены, неограниченный ассортимент и индивидуальный подход к клиентам являются основой для выстраивания долгосрочного и эффективного сотрудничества с предприятиями радиоэлектронной промышленности, предприятиями ВПК и научно-исследовательскими институтами России.

С нами вы становитесь еще успешнее!

Наши контакты:

Телефон: +7 812 627 14 35

Электронная почта: sales@st-electron.ru

Адрес: 198099, Санкт-Петербург, Промышленная ул, дом № 19, литера Н, помещение 100-Н Офис 331