ISL76322

16-Bit Long-Reach Video Automotive Grade SERDES

FN7611
Rev 3.00
May 6, 2015

The ISL76322 is a serializer/deserializer of LVCMOS parallel video data. The video data presented to the serializer on the parallel LVCMOS bus is serialized into a high-speed differential signal. This differential signal is converted back to parallel video at the remote end by the deserializer. The fully featured register set is programmed through the industry standard I^2C.

Related Literature

- See FN6827, ISL34341 Data Sheet "WSVGA 24-Bit Long-Reach Video SERDES with Bi-directional Side-Channel"

Features

- 16-bit RGB Transport Over a Single Differential Pair
- 6MHz to 50MHz Pixel Clock Rates
- AEC-Q100 Qualified Component
- Hot-plugging with Automatic Resynchronization Every HSYNC
- Selectable Clock Edge for Parallel Data Output
- DC-balanced with Industry Standard 8b/10b Line Code Allows AC-coupling, Providing Immunity Against Ground Shifts
- 16 Programmable Settings Each for Transmitter Amplitude Boost and Pre-emphasis and Receiver Equalization, Allow for Longer Cable Lengths and Higher Data Rates
- Slew Rate Control and Spread Spectrum Capability on Outputs Reduce the Potential for EMI
- Same Device for Serializer and Deserializer Simplifies Inventory

Applications

- Video Entertainment Systems
- Remote Cameras

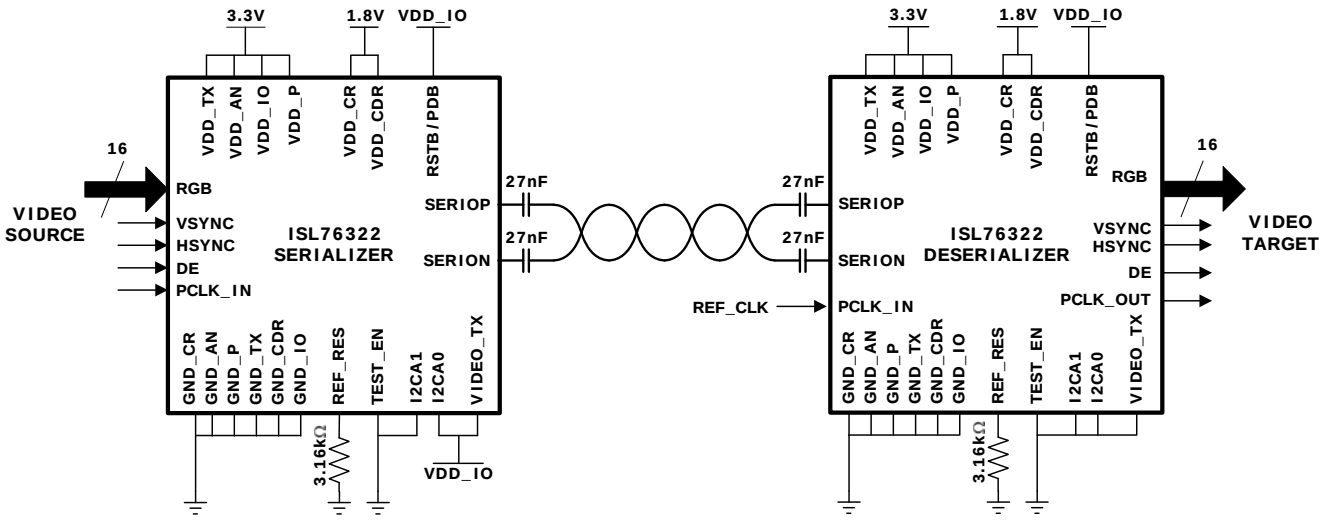

FIGURE 1. TYPICAL APPLICATION

Block Diagram

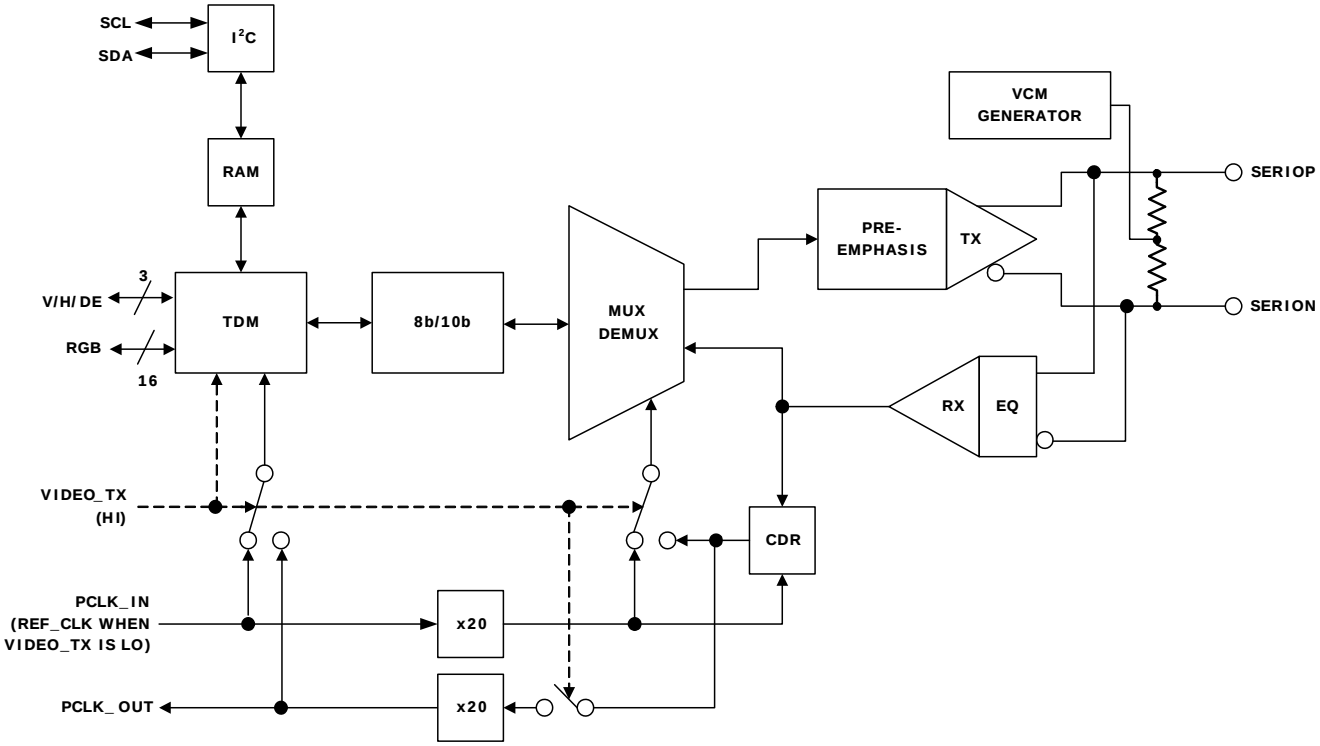

Pin Configuration

ISL76322
(48 LD QFN)
TOP VIEW

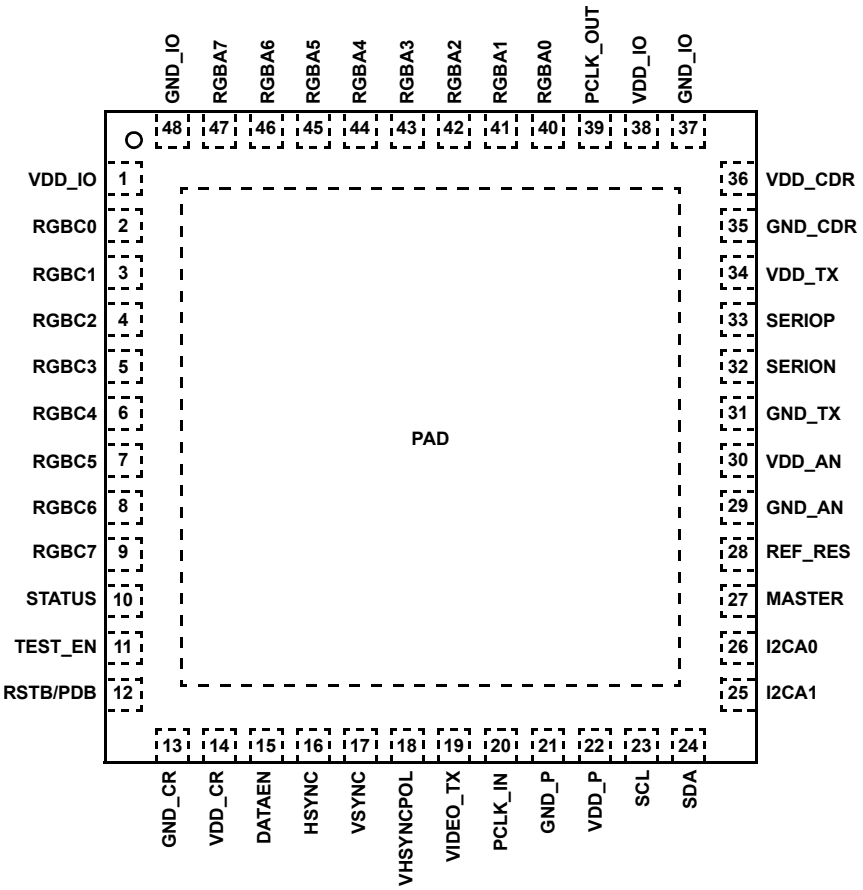

Pin Descriptions

PIN NUMBER	PIN NAME	DESCRIPTION	
		SERIALIZER	DESERIALIZER
47, 46 45, 44 43, 42 41, 40 9, 8 7, 6 5, 4 3, 2	RGBA7, RGBA6 RGBA5, RGBA4 RGBA3, RGBA2 RGBA1, RGBA0 RGBC7, RGBC6 RGBC5, RGBC4 RGBC3, RGBC2 RGBC1, RGBC0	Parallel video data LVCMOS inputs with Hysteresis	Parallel video data LVCMOS outputs
16	HSYNC	Horizontal (line) Sync LVCMOS input with Hysteresis	Horizontal (line) Sync LVCMOS output
17	VSYNC	Vertical (frame) Sync LVCMOS input with Hysteresis	Vertical (frame) Sync LVCMOS output
15	DATAEN	Video Data Enable LVCMOS input with Hysteresis	Video Data Enable LVCMOS output
20	PCLK_IN	Pixel clock LVCMOS input	PLL reference clock LVCMOS input
39	PCLK_OUT	Default; not used	Recovered clock LVCMOS output
33, 32	SERIOP, SERION	High-speed differential serial I/O	High speed differential serial I/O

Pin Descriptions (Continued)

PIN NUMBER	PIN NAME	DESCRIPTION	
		SERIALIZER	DESERIALIZER
18	VHSYNCPOL	CMOS input for HSYNC and VSYNC Polarity 1: HSYNC & VSYNC active low 0: HSYNC & VSYNC active high	
19	VIDEO_TX	CMOS input for video flow direction 1: Video serializer 0: Video deserializer	
24, 23	SDA, SCL (Note 1)	I^2C Interface Pins (I^2C DATA, I^2C CLK), weak internal pullup	
25, 26	I2CA[1:0] (Note 1)	I^2C Device Address	
27	MASTER	I^2C Master Mode 1: Master 0: Slave	
12	RSTB/PDB	CMOS input for Reset and Power-down. For normal operation, this pin should be driven high. When this pin is taken low, the device will be reset. If this pin stays low, the device will be in PD mode.	
10	STATUS	CMOS output for Receiver Status: 1: Valid 8b/10b data received 0: No valid data detected Note: serializer and deserializer switch roles during side-channel reverse traffic	
28	REF_RES	Analog bias setting resistor connection; use 3.16kΩ ±1% to ground	
21	GND_P (Note 2)	PLL Ground	
37, 48	GND_IO (Note 2)	Digital (Parallel and Control) Ground	
35	GND_CDR (Note 2)	Analog (Serial) Data Recovery Ground	
31	GND_TX (Note 2)	Analog (Serial) Output Ground	
29	GND_AN (Note 2)	Analog Bias Ground	
13	GND_CR (Note 2)	Core Logic Ground	
14	VDD_CR	Core Logic VDD	
34	VDD_TX	Analog (Serial) Output VDD	
30	VDD_AN	Analog Bias VDD	
36	VDD_CDR	Analog (Serial) Data Recovery VDD	
1, 38	VDD_IO (Note 1)	Digital (Parallel and Control) VDD	
22	VDD_P	PLL VDD	
11	TEST_EN	Must be connected to ground	
Exposed Pad	PAD	Must be connected to ground, not an electrical connection	

NOTES:

1. Pins with the same name are internally connected together. However, this connection must NOT be used for connecting together external components or features.
2. The various differently-named Ground pins are internally weakly connected. They must be tied together externally. The different names are provided to assist in minimizing the current loops involved in bypassing the associated supply VDD pins. In particular, for ESD testing, they should be considered a common connection.

Ordering Information

PART NUMBER (Notes 3, 4, 5)	PART MARKING	TEMP. RANGE (°C)	PACKAGE (RoHS Compliant)	PKG. DWG. #
ISL76322ARZ	ISL76322 ARZ	-40 to +105	48 Ld QFN	L48.7x7C

NOTES:

3. Add "-T*" suffix for tape and reel. Please refer to TB347 for details on reel specifications.
4. These Intersil Pb-free plastic packaged products employ special Pb-free material sets, molding compounds/die attach materials, and 100% matte tin plate plus anneal (e3 termination finish, which is RoHS compliant and compatible with both SnPb and Pb-free soldering operations). Intersil Pb-free products are MSL classified at Pb-free peak reflow temperatures that meet or exceed the Pb-free requirements of IPC/JEDEC J STD-020.
5. For Moisture Sensitivity Level (MSL), please see device information page for ISL76322. For more information on MSL please see techbrief TB363.

Absolute Maximum Ratings

Supply Voltage
- VDD_P to GND_P, VDD_TX to GND_TX, VDD_IO to GND_IO . . . -0.5V to 4.6V
- VDD_CDR to GND_CDR, VDD_CR to GND_CR. . . . . -0.5V to 2.5V
- Between any pair of GND_P, GND_TX, GND_IO, GND_CDR, GND_CR . . . . . -0.1V to 0.1V

3.3V Tolerant LVTTL/LVCMOS
- Input Voltage. . . . . -0.3V to VDD_IO +0.3V

Differential Input Voltage . . . . . -0.3V to VDD_IO + 0.3V
Differential Output Current . . . . . Short Circuit Protected
LVTTL/LVCMOS Outputs. . . . . Short Circuit Protected
ESD Rating
- Human Body Model (Tested per JESD22-A114E)
  - All pins 4kV
  - SERIOP/N
  - (All VDD Connected, all GND Connected) 8kV
- Machine Model (Tested per JESD-A115-A) 200V

Charge Device Model (Tested per AEC-Q100-011-B) 2000V
Latch-up (Tested per JESD-78B; Class2, Level A) 100mA

Thermal Information

Thermal Resistance (Typical)	θ_{JA}	θ_{JC} (°C/W)
QFN Package (Notes 6, 7)	32	3.7

Maximum Power Dissipation 327mW
Maximum Junction Temperature . . . . . +125°C
Maximum Storage Temperature Range . . . . . -65°C to +150°C
Pb-free Reflow Profile . . . . . see TB493

Recommended Operating Conditions

Operating Temperature Range . . . . . -40°C to +105°C

CAUTION: Do not operate at or near the maximum ratings listed for extended periods of time. Exposure to such conditions may adversely impact product reliability and result in failures not covered by warranty.

NOTES:

6. θ_{JA} is measured in free air with the component mounted on a high effective thermal conductivity test board with "direct attach" features. See Tech Brief TB379.
7. For θ_{JC}, the "case temp" location is the center of the exposed metal pad on the package underside.

Electrical Specifications

Unless otherwise indicated, all data is for: VDD_CDR = VDD_CR = 1.8V, VDD_IO = 3.3V, VDD_TX = VDD_P = VDD_AN = 3.3V, T_A = +25°C, Ref_Res = 3.16kΩ, High-speed AC-coupling capacitor = 27nF. **Boldface limits apply over the operating temperature range, -40°C to +105°C.**

PARAMETER	SYMBOL	TEST CONDITIONS	MIN (Note 10)	TYP	MAX (Note 10)	UNIT
POWER SUPPLY VOLTAGE						
VDD_CDR, VDD_CR			**1.7**	1.8	**1.9**	V
VDD_TX, VDD_P, VDD_AN, VDD_IO			**3.0**	3.3	**3.6**	V
SERIALIZER POWER SUPPLY CURRENTS						
Total 1.8V Supply Current		PCLK_IN = 45MHz		62	**80**	mA
Total 3.3V Supply Current		(Note 8)		40	**52**	mA
DESERIALIZER POWER SUPPLY CURRENTS						
Total 1.8V Supply Current		PCLK_IN = 45MHz		66	**76**	mA
Total 3.3V Supply Current		(Note 8)		50	**63**	mA
POWER-DOWN SUPPLY CURRENT						
Total 1.8V Power-Down Supply Current		RSTB = GND		10		mA
Total 3.3V Power-Down Supply Current				0.5		mA
PARALLEL INTERFACE						
High Level Input Voltage	V_{IH}		**2.0**			V
Low Level Input Voltage	V_{IL}				**0.8**	V
Input Leakage Current	I_{IN}		**-1**	±0.01	**1**	µA
High Level Output Voltage	V_{OH}	I_{OH} = -4.0mA, VDD_IO = 3.0V	**2.6**			V
Low Level Output Voltage	V_{OL}	I_{OL} = 4.0mA, VDD_IO = 3.6V			**0.4**	V
Output Short Circuit Current	I_{OSC}				**35**	mA

Electrical Specifications Unless otherwise indicated, all data is for: VDD_CDR = VDD_CR = 1.8V, VDD_IO = 3.3V, VDD_TX = VDD_P = VDD_AN = 3.3V, T_A = +25°C, Ref_Res = 3.16kΩ, High-speed AC-coupling capacitor = 27nF. **Boldface limits apply over the operating temperature range, -40°C to +105°C. (Continued)**

PARAMETER	SYMBOL	TEST CONDITIONS	MIN (Note 10)	TYP	MAX (Note 10)	UNIT
Output Rise and Fall Times	t_{OR}/t_{OF}	Slew rate control set to min C_L = 8pF		1		ns
		Slew rate control set to max, C_L = 8pF		4		ns
SERIALIZER PARALLEL INTERFACE						
PCLK_IN Frequency	f_{IN}		6		50	MHz
PCLK_IN Duty Cycle	t_{IDC}		**40**	50	**60**	%
Parallel Input Setup Time	t_{IS}		**3.5**			ns
Parallel Input Hold Time	t_{IH}		**1.0**			ns
DESERIALIZER PARALLEL INTERFACE						
PCLK_OUT Frequency	f_{OUT}		6		50	MHz
PCLK_OUT Duty Cycle	t_{ODC}			50		%
PCLK_OUT Period Jitter (rms)	t_{OJ}	Clock randomizer off		0.5		$\%t_{PCLK}$
PCLK_OUT Spread Width	t_{OSPRD}	Clock randomizer on		±20		$\%t_{PCLK}$
PCLK_OUT to Parallel Data Outputs (includes Sync and DE pins)	t_{DV}	Relative to PCLK_OUT, (Note 9)	**-1.0**		**5.5**	ns
Deserializer Output Latency	t_{CPD}	Inherent in the design	**4**	9	**14**	PCLK
DESERIALIZER REFERENCE CLOCK (REF_CLK IS FED INTO PCLK_IN)						
REF_CLK Lock Time	t_{PLL}			100		µs
REF_CLK to PCLK_OUT Maximum Frequency Offset		PCLK_OUT is the recovered clock	**1500**	5000		ppm
HIGH-SPEED TRANSMITTER						
HS Differential Output Voltage, Transition Bit	VOD_{TR}	TXCN = 0x00	**650**	800	**900**	mV_{P-P}
		TXCN = 0x0F		900		mV_{P-P}
		TXCN = 0xF0		1100		mV_{P-P}
		TXCN = 0xFF		1300		mV_{P-P}
HS Differential Output Voltage, Non-Transition Bit	VOD_{NTR}	TXCN = 0x00	**650**	800	**900**	mV_{P-P}
		TXCN = 0x0F		900		mV_{P-P}
		TXCN = 0xF0		430		mV_{P-P}
		TXCN = 0xFF		600		mV_{P-P}
HS Generated Output Common Mode Voltage	V_{OCM}			2.35		V
HS Common Mode Serializer-Deserializer Voltage Difference	ΔV_{CM}			10	**20**	mV
HS Differential Output Impedance	R_{OUT}		**80**	100	**120**	Ω
HS Output Latency	t_{LPD}	Inherent in the design	**4**	7	**10**	PCLK
HS Output Rise and Fall Times	t_R/t_F	20% to 80%		150		ps
HS Differential Skew	t_{SKEW}			<10		ps
HS Output Random Jitter	t_{RJ}	PCLK_IN = 45MHz		6		ps_{rms}
HS Output Deterministic Jitter	t_{DJ}	PCLK_IN = 45MHz		25		ps_{P-P}

Electrical Specifications Unless otherwise indicated, all data is for: VDD_CDR = VDD_CR = 1.8V, VDD_IO = 3.3V, VDD_TX = VDD_P = VDD_AN = 3.3V, T_A = +25°C, Ref_Res = 3.16kΩ, High-speed AC-coupling capacitor = 27nF. **Boldface limits apply over the operating temperature range, -40°C to +105°C. (Continued)**

PARAMETER	SYMBOL	TEST CONDITIONS	MIN (Note 10)	TYP	MAX (Note 10)	UNIT
HIGH SPEED RECEIVER						
HS Differential Input Voltage	V_{ID}		**75**			mV_{P-P}
HS Generated Input Common Mode Voltage	V_{ICM}			2.32		V
HS Differential Input Impedance	R_{IN}		**80**	100	**120**	Ω
HS Maximum Jitter Tolerance				0.50		UI_{P-P}
I^2C						
I^2C Clock Rate (on SCL)	f_{I2C}			100	**400**	kHz
I^2C Clock Pulse Width (HI or LO)			**1.3**			µs
I^2C Clock Low to Data Out Valid			**0**		**1**	µs
I^2C Start/Stop Setup/Hold Time			**0.6**			µs
I^2C Data in Setup Time			**100**			ns
I^2C Data in Hold Time			**100**			ns
I^2C Data out Hold Time			**100**			ms

NOTES:

8. IDDIO is nominally 50µA and not included in this total as it is dominated by the loading of the parallel pins.
9. This parameter is the output data skew from the invalid edge of PCLK_OUT. The setup and hold time provided to a system is dependent on the PCLK frequency and is calculated as follows: 0.5 * f_{IN} - t_{DV}.
10. Compliance to datasheet limits is assured by one or more methods: production test, characterization and/or design.

Timing Diagrams

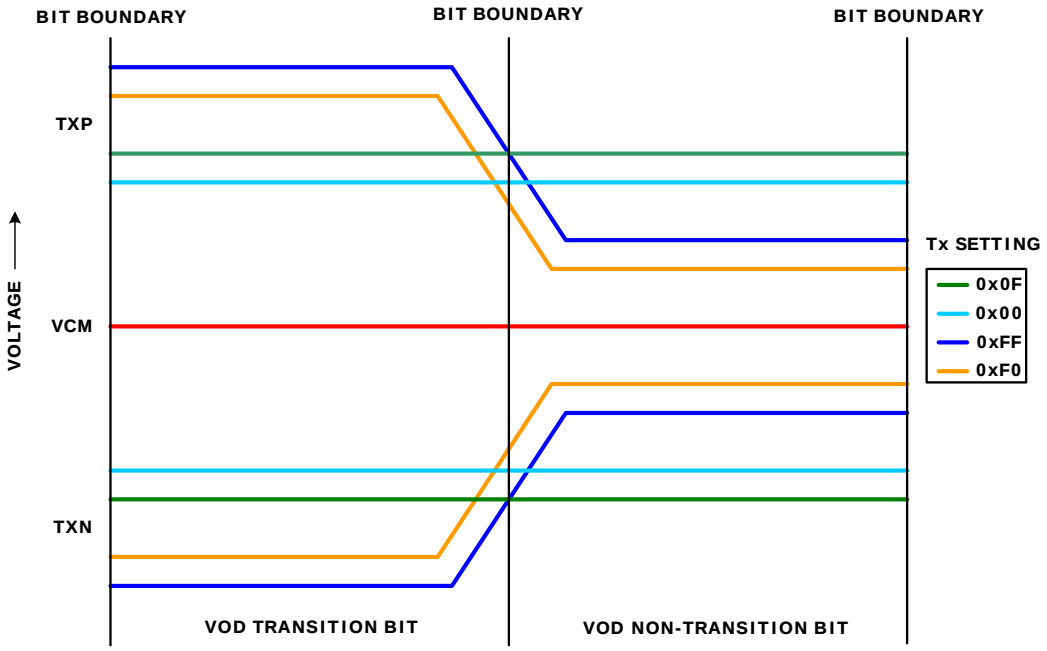

FIGURE 2. VOD vs TX SETTING

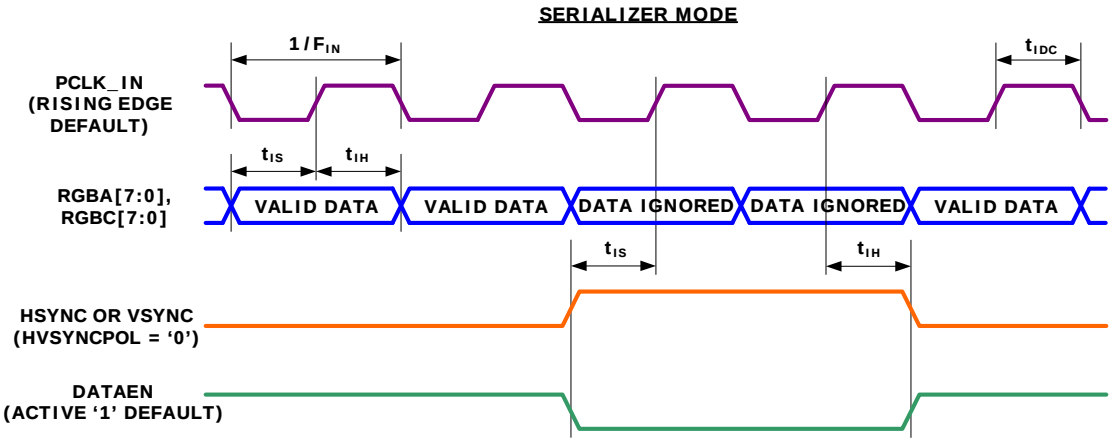

FIGURE 3. PARALLEL VIDEO INPUT TIMING

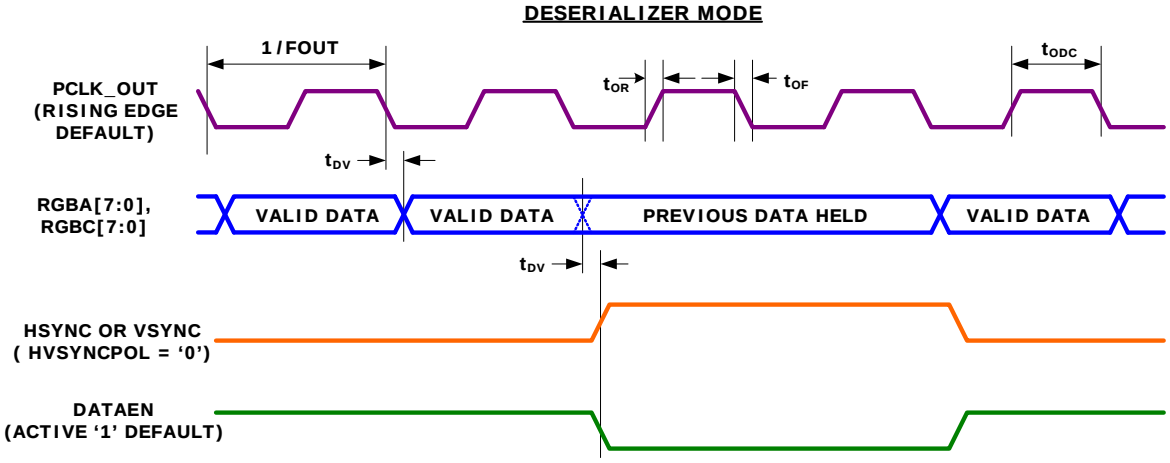

FIGURE 4. PARALLEL VIDEO OUTPUT TIMING

Applications

Detailed Description and Operation

A pair of ISL76322 SERDES transports 16-bit parallel video for the ISL76322 along with auxiliary data over a single 100Ω differential cable either to a display or from a camera. Auxiliary data is transferred in both directions every video frame. This feature can be used for remote configuration and telemetry.

The benefits include lower EMI, lower costs, greater reliability and space savings. The same device can be configured to be either a serializer or deserializer by setting one pin (VIDEO_TX), simplifying inventory. RGBA/C, VSYNC, HSYNC, and DATAEN pins are inputs in serializer mode and outputs in deserializer mode.

The video data presented to the serializer on the parallel LVCMOS bus is serialized into a high-speed differential signal. This differential signal is converted back to parallel video at the remote end by the deserializer. The Side Channel data (auxiliary data) is transferred between the SERDES pair during the first two lines of the vertical video blanking interval.

When the side-channel is enabled, which is the default, there will be a number of PCLK cycles uncertainty from frame-to-frame. This should not cause sync problems with most displays as this occurs during the vertical front porch of the blanking period. When properly configured, the SERDES link supports end-to-end transport with fewer than one error in 10^{10} bits.

Differential Signals and Termination

The ISL76322 serializes the 16-bit parallel data plus 3 sync signals at 20x the PCLK_IN frequency. The extra 2 bits per word come from the 8b/10b encoding scheme which helps create the highest quality serial link.

The high bit rate of the differential serial data requires special care in the layout of traces on PCBs, in the choice and assembly of connectors, and in the cables themselves.

PCB traces need to be adjacent, matched in length and drawn to result in a differential 100Ω controlled impedance. For best EMI performance, the cable should be low loss and have a differential 100Ω impedance. The maximum cable length for a functioning link is dependent on the PCLK_IN frequency, the cable loss and impedance, as well as the pre-emphasis and equalization settings. Functioning links of 25 meters are often possible at the maximum frequency.

SERIOP and SERION pins incorporate internal differential termination of the serial signal lines.

SERIO Pin AC-Coupling

AC-coupling minimizes the effects of DC common mode voltage difference and local power supply variations between two SERDES. The serializer outputs DC balanced 8b/10b line code, which allows AC-coupling.

The AC-coupling capacitor on SERIO pins must be 27nF on the serializer board and 27nF on the deserializer board. The value of the AC-coupling capacitor is very critical since a value too small will attenuate the high-speed signal at low clock rate. A value too big will slow down the turn around time for the side-channel. It is an advantage to have the pair of capacitors as closely matched as possible.

Receiver Reference Clock (REF_CLK)

The reference clock (REF_CLK) for the PLL is fed into PCLK_IN pin. REF_CLK is used to recover the clock from the high-speed serial stream. REF_CLK is very sensitive to any instability. The following conditions must be met at all times after power is applied to the deserializer, or else the deserializer may need a manual reset:

- VDD must be applied and stable
- REF_CLK frequency must be within the limits specified
- REF_CLK amplitude must be stable

A simple 3.3V CMOS crystal oscillator can be used for REF_CLK

Power Supply Sequencing

The 3.3V supply must be higher than the 1.8V supply at all times, including during power-up and power-down. To meet this requirement, the 3.3V supply must be powered up before the 1.8V supply.

For the deserializer, REF_CLK must not be applied before the device is fully powered up. Applying REF_CLK before power-up

may require the deserializer to be manually reset. A 10ms delay after the 1.8V supply is powered up guarantees normal operation.

Power Supply Bypassing and Layout

The serializer and deserializer functions rely on the stable functioning of PLLs locked to local reference sources or locked to an incoming signal. It is important that the various supplies (VDD_P, VDD_AN, VDD_CDR, VDD_TX) be well bypassed over a wide range of frequencies, from below the typical loop bandwidth of the PLL to approaching the signal bit rate of the serial data. A combination of different values of capacitors from 1000pF to 5µF or more with low ESR characteristics is generally required.

The parallel LVCMOS VDD_IO supply is inherently less sensitive, but since the RGB and SYNC/DATAEN signals can all swing on the same clock edge, the current in these pins, and the corresponding GND pins, can undergo substantial current flow changes. Once again, a combination of different values of capacitors over a wide range, with low ESR characteristics, is desirable.

A set of arrangements of this type is shown in Figure 5, where each supply is bypassed with a ferrite-bead-based choke, and a range of capacitors. A “choke” is preferable to an “inductor” in this application, since a high-Q inductor will be likely to cause one or more resonances with the shunt capacitors, potentially causing problems at or near those frequencies, while a “lossy” choke will reflect a high impedance over a wide frequency range.

The higher value capacitor, in particular, needs to be chosen carefully, with special care regarding its ESR. Very good results can be obtained with multilayer ceramic capacitors (available from many suppliers) and generally in small outlines (such as the 1210 outline suggested in the schematic shown in Figure 5), which provide good bypass capabilities down to a few mΩ at 1MHz to 2MHz. Other capacitor technologies may also be suitable (perhaps niobium oxide), but “classic” electrolytic capacitors frequently have ESR values of above 1Ω, that nullify any decoupling effect above the 1kHz to 10kHz frequency range.

Capacitors of 0.1µF offer low impedance in the 10MHz to 20MHz region, and 1000pF capacitors in the 100MHz to 200MHz region. In general, one of the lower value capacitors should be used at each supply pin on the IC. Figure 5 shows the grounding of the various capacitors to the pin corresponding to the supply pin. Although all the ground supplies are tied together, the PCB layout should be arranged to emulate this arrangement (at least for the smaller value (high frequency) capacitors), as much as possible.

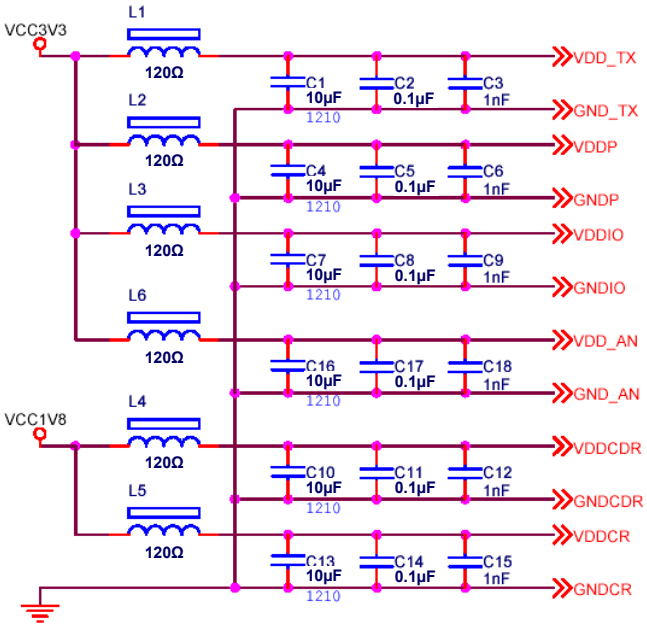

FIGURE 5. POWER SUPPLY BYPASSING

I²C Interface

The I²C interface allows access to internal registers used to configure the SERDES and to obtain status information. A serializer must be assigned a different address than its deserializer counterpart if the side channel is used. The upper 5 bits are permanently set to 011 11 and the lower 2 bits determined by pins as follows:

0	1	1	1	1	I2CA1	I2CA0	R/$\overline{W}$

Thus, 4 SERDES can reside on the same bus. By convention, when all address pins are tied low, the device address is referred to as 0x78.

SCL and SDA are open drain to allow multiple devices to share the bus. If not used, SCL and SDA should be tied to VDD_IO.

Exposed Pad

While it is not a required electrical connection, it is recommended that the exposed pad on the bottom of the package be soldered to the circuit board. This will ensure that the full power dissipation of the package can be utilized. The pad should be connected to ground and not left floating. For best thermal conductivity, 16 vias should connect the footprint for the exposed pad on the circuit board to the ground plane. This connection is not required for basic operation of the chip.

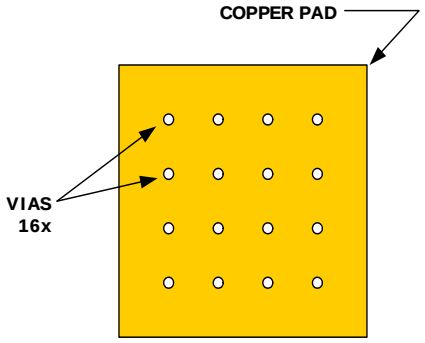

FIGURE 6. LAYOUT FOR THE EXPOSED PAD

© Copyright Intersil Americas LLC 2011-2015. All Rights Reserved.
All trademarks and registered trademarks are the property of their respective owners.

For additional products, see www.intersil.com/en/products.html

Intersil Automotive Qualified products are manufactured, assembled and tested utilizing TS16949 quality systems as noted in the quality certifications found at www.intersil.com/en/support/qualandreliability.html

Intersil products are sold by description only. Intersil may modify the circuit design and/or specifications of products at any time without notice, provided that such modification does not, in Intersil's sole judgment, affect the form, fit or function of the product. Accordingly, the reader is cautioned to verify that datasheets are current before placing orders. Information furnished by Intersil is believed to be accurate and reliable. However, no responsibility is assumed by Intersil or its subsidiaries for its use; nor for any infringements of patents or other rights of third parties which may result from its use. No license is granted by implication or otherwise under any patent or patent rights of Intersil or its subsidiaries.

For information regarding Intersil Corporation and its products, see www.intersil.com

Revision History

The revision history provided is for informational purposes only and is believed to be accurate, but not warranted. Please go to web to make sure you have the latest Rev.

DATE	REVISION	CHANGE
May 6, 2015	FN7611.3	“Absolute Maximum Ratings” on page 6 - changed Charge Device Model from (Tested per JESD22-C101C) to (Tested per AEC-Q100-011-B)
December 23, 2013	FN7611.2	Page 12 - 2nd line of the disclaimer changed from: "Intersil products are manufactured, assembled and tested utilizing ISO9001 quality systems as noted" to: "Intersil Automotive Qualified products are manufactured, assembled and tested utilizing TS16949 quality systems as noted"
March 1, 2011	FN7611.1	Removed 4th bullet from Features on page 1 which read “Bi-directional Auxiliary Data Transport without Extra Bandwidth and Over the Same Differential Pair”
January 31, 2011	FN7611.0	Initial Release.

About Intersil

Intersil Corporation is a leading provider of innovative power management and precision analog solutions. The company's products address some of the largest markets within the industrial and infrastructure, mobile computing and high-end consumer markets.

For the most updated datasheet, application notes, related documentation and related parts, please see the respective product information page found at www.intersil.com.

You may report errors or suggestions for improving this datasheet by visiting www.intersil.com/ask.

Reliability reports are also available from our website at www.intersil.com/support

Package Outline Drawing

L48.7x7C

48 LEAD QUAD FLAT NO-LEAD PLASTIC PACKAGE (PUNCH QFN)
Rev 0, 1/08

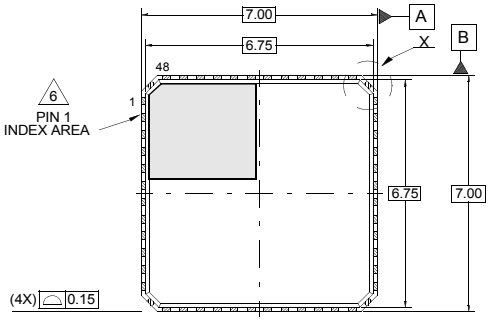

TOP VIEW

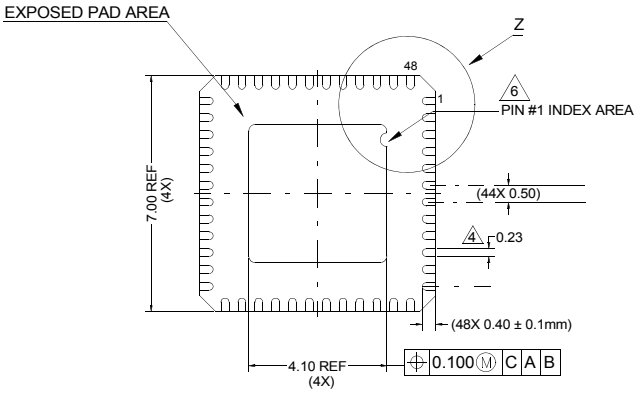

BOTTOM VIEW

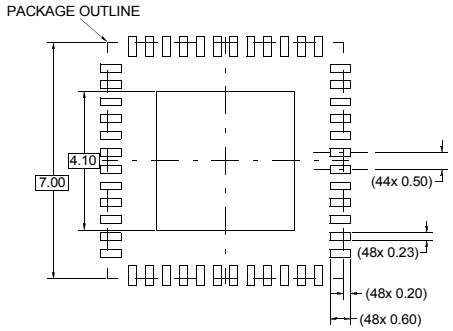

TYPICAL RECOMMENDED LAND PATTERN

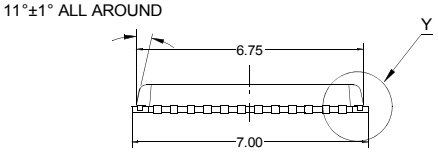

SIDE VIEW

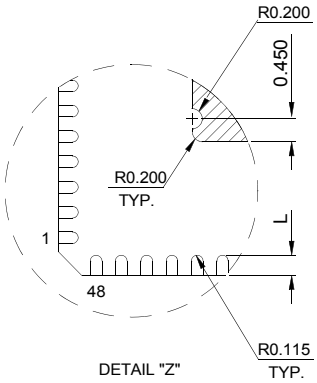

DETAIL "Z"

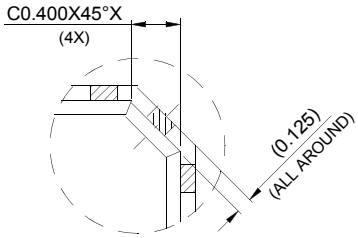

DETAIL "X"

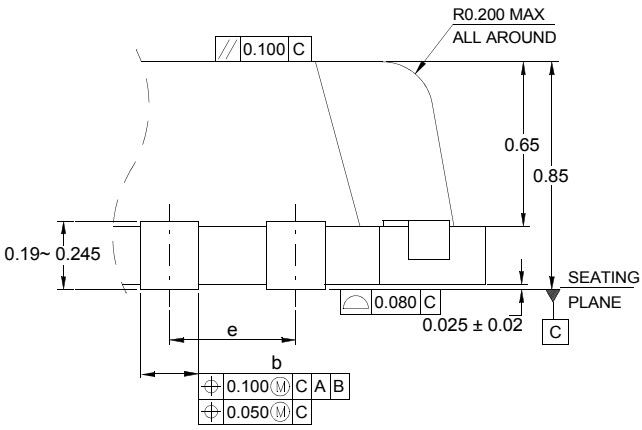

DETAIL "Y"

NOTES:

1. Dimensions are in millimeters.
   Dimensions in ( ) for Reference Only.
2. Dimensioning and tolerancing conform to JESD-MO220.
3. Unless otherwise specified, tolerance : Decimal ± 0.05, body tolerance ± 0.1
4. Dimension b applies to the metallized terminal and is measured between 0.18mm and 0.28mm from the terminal tip. Frame base metal thickness 0.203mm.
5. Tiebar shown (if present) is a non-functional feature.
6. The configuration of the pin #1 identifier is optional, but must be located within the zone indicated. The pin #1 identifier may be either a mold or mark feature.

Мы молодая и активно развивающаяся компания в области поставок электронных компонентов. Мы поставляем электронные компоненты отечественного и импортного производства напрямую от производителей и с крупнейших складов мира.

Благодаря сотрудничеству с мировыми поставщиками мы осуществляем комплексные и плановые поставки широчайшего спектра электронных компонентов.

Собственная эффективная логистика и склад в обеспечивает надежную поставку продукции в точно указанные сроки по всей России.

Мы осуществляем техническую поддержку нашим клиентам и предпродажную проверку качества продукции. На все поставляемые продукты мы предоставляем гарантию .

Осуществляем поставки продукции под контролем ВП МО РФ на предприятия военно-промышленного комплекса России , а также работаем в рамках 275 ФЗ с открытием отдельных счетов в уполномоченном банке. Система менеджмента качества компании соответствует требованиям ГОСТ ISO 9001.

Минимальные сроки поставки, гибкие цены, неограниченный ассортимент и индивидуальный подход к клиентам являются основой для выстраивания долгосрочного и эффективного сотрудничества с предприятиями радиоэлектронной промышленности, предприятиями ВПК и научно-исследовательскими институтами России.

С нами вы становитесь еще успешнее!

Наши контакты:

Телефон: +7 812 627 14 35

Электронная почта: sales@st-electron.ru

Адрес: 198099, Санкт-Петербург, Промышленная ул, дом № 19, литера Н, помещение 100-Н Офис 331