Features

- Advanced, High-speed, Electrically-erasable Programmable Logic Device
  - Superset of 22V10
  - Enhanced Logic Flexibility
  - Backward Compatible with ATV750B/BL and ATV750/L
- Low-power Edge-sensing "L" Option with 1 mA Standby Current
- D- or T-type Flip-flop
- Product Term or Direct Input Pin Clocking for Flip-flop
- 7.5 ns Maximum Pin-to-pin Delay with 5V Operation
- Highest Density Programmable Logic Available in 24-pin and 28-pin Packages
  - Advanced Electrically-erasable Technology
  - Reprogrammable
  - 100% Tested
- Increased Logic Flexibility
  - 42 Array Inputs, 20 Sum Terms and 20 Flip-flops
- Enhanced Output Logic Flexibility
  - All 20 Flip-flops Feed Back Internally
  - 10 Flip-flops are also Available as Outputs
- Programmable Pin-keeper Circuits
- Dual-in-line and Surface Mount Package in Standard Pinouts
- Full Military, Commercial and Industrial Temperature Ranges
- 20-year Data Retention
- 2000V ESD Protection
- 1000 Erase/Write Cycles
- Green Package Options (Pb/Halide-free/RoHS Compliant) Available

1. Block Diagram

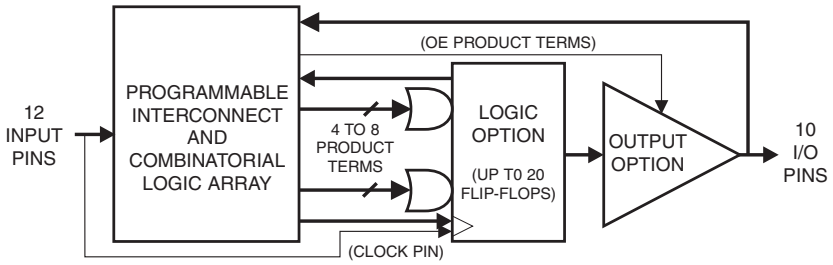

High-speed Complex Programmable Logic Device

ATF750C
ATF750CL

0776L–PLD–11/08

2. Pin Configurations

Pin	Function
CLK	Clock
IN	Logic Inputs
I/O	Bi-directional Buffers
GND	Ground
VCC	+5V Supply

2.1 DIP/SOIC/TSSOP

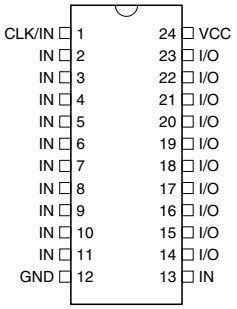

2.2 PLCC/LCC

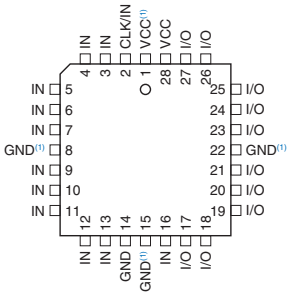

Note: For PLCC, pins 1, 8, 15, and 22 can be left unconnected. For superior performance, connect VCC to pin 1 and GND to pins 8, 15, and 22.

3. Description

The ATF750C(L)s are twice as powerful as most other 24-pin programmable logic devices. Increased product terms, sum terms, flip-flops and output logic configurations

translate into more usable gates. High-speed logic and uniform predictable delays guarantee fast in-system performance. The ATF750C(L) is a high-performance CMOS (electrically-erasable) complex programmable logic device (CPLD) that utilizes Atmel's proven electrically-erasable technology.

Each of the ATF750C(L)'s 22 logic pins can be used as an input. Ten of these can be used as inputs, outputs or bi-directional I/O pins. Each flip-flop is individually configurable as either D- or T-type. Each flip-flop output is fed back into the array independently. This allows burying of all the sum terms and flip-flops.

There are 171 total product terms available. There are two sum terms per output, providing added flexibility. A variable format is used to assign between four to eight product terms per sum term. Much more logic can be replaced by this device than by any other 24-pin PLD. With 20 sum terms and flip-flops, complex state machines are easily implemented with logic to spare.

Product terms provide individual clocks and asynchronous resets for each flip-flop. Each flip-flop may also be individually configured to have direct input pin controlled clocking. Each output has its own enable product term. One product term provides a common synchronous preset for all flip-flops. Register preload functions are provided to simplify testing. All registers automatically reset upon power-up.

The ATF750CL is a low-power device with speeds as fast as 15 ns. The ATF750CL provides the optimum low-power CPLD solution. This device significantly reduces total system power, thereby allowing battery-powered operations.

4. Absolute Maximum Ratings*

Temperature Under Bias..... -55°C to +125°C

Storage Temperature..... -65°C to +150°C

Voltage on Any Pin with
Respect to Ground .....-2.0V to +7.0V[(1)]

Voltage on Input Pins
with Respect to Ground
During Programming.....-2.0V to +14.0V[(1)]

Programming Voltage with
Respect to Ground .....-2.0V to +14.0V[(1)]

*NOTICE: Stresses beyond those listed under "Absolute Maximum Ratings" may cause permanent damage to the device. This is a stress rating only and functional operation of the device at these or any other conditions beyond those indicated in the operational sections of this specification is not implied. Exposure to absolute maximum rating conditions for extended periods may affect device reliability.

Note: 1. Minimum voltage is -0.6V DC, which may undershoot to -2.0V for pulses of less than 20 ns. Maximum output pin voltage is V_{CC} + 0.75V DC, which may overshoot to 7.0V for pulses of less than 20 ns.

5. DC and AC Operating Conditions

All members of the family are specified to operate in either one of two voltage ranges. Parameters are specified as noted to be either 2.7V to 3.6V, 5V ±5% or 5V ±10%.

5V Operation	**Commercial -7.5, -10, -15**	**Industrial -10, -15**	**Military**
Operating Temperature (Ambient)	0°C - 70°C	-40°C - +85°C	-55°C - +125°C (case)
V_{CC} Power Supply	5V ± 5%	5V ± 10%	5V ± 10%

6. Logic Options

Combinatorial Output

Combined Terms

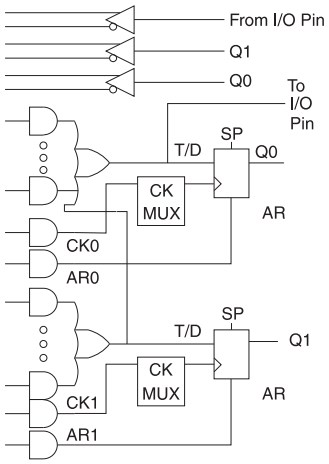

Separate Terms

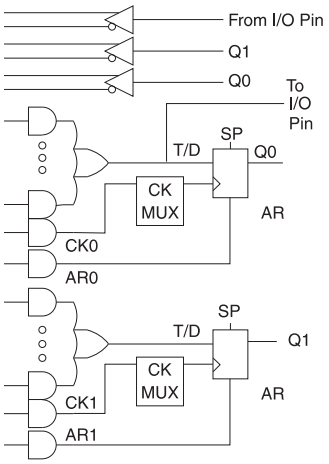

Registered Output

Combined Terms

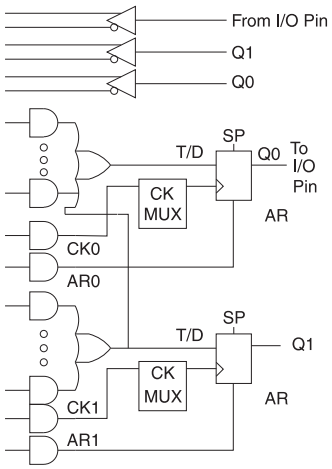

Separate Terms

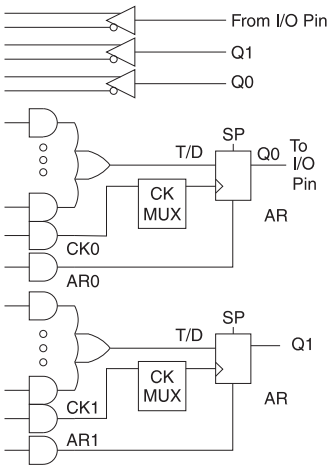

7. Clock Mux

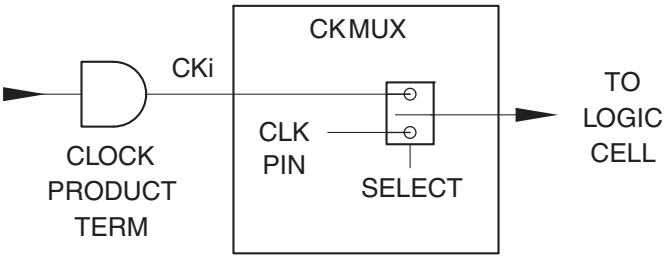

8. Output Options

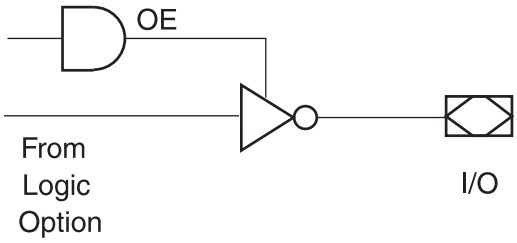

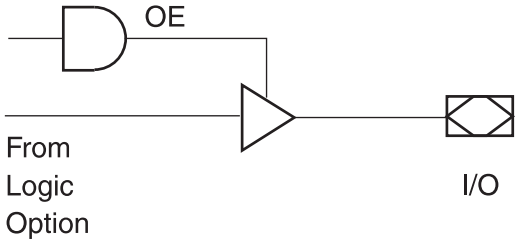

9. Bus-friendly Pin-keeper Input and I/Os

All input and I/O pins on the ATF750C(L) have programmable “pin-keeper” circuits. If activated, when any pin is driven high or low and then subsequently left floating, it will stay at that previous high or low level.

This circuitry prevents unused input and I/O lines from floating to intermediate voltage levels, which causes unnecessary power consumption and system noise. The keeper circuits eliminate the need for external pull-up resistors and eliminate their DC power consumption.

Enabling or disabling of the pin-keeper circuits is controlled by the device type chosen in the logic compiler device selection menu. Please refer to the software compiler table for more details. Once the pin-keeper circuits are disabled, normal termination procedures are required for unused inputs and I/Os.

10. Input Diagram

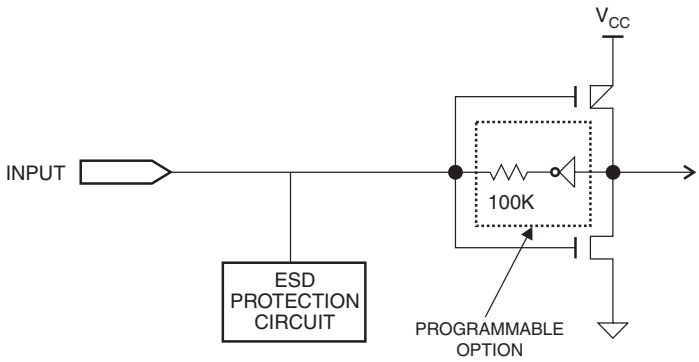

11. I/O Diagram

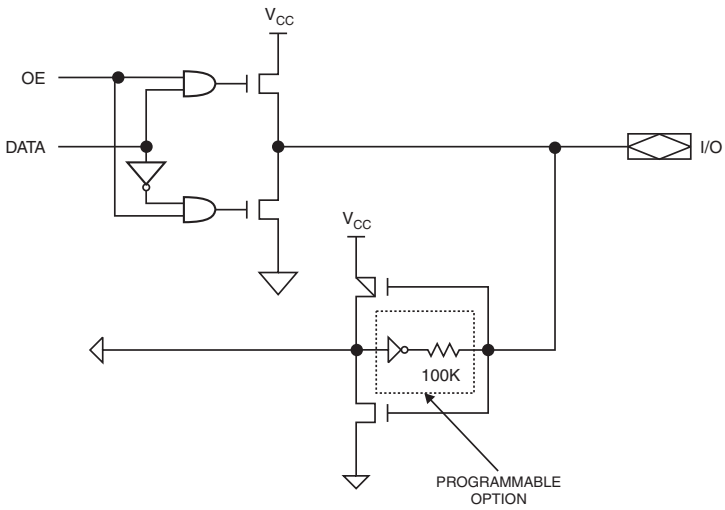

12. DC Characteristics

Symbol	Parameter	Condition			Min	Typ	Max	Units
I_{LI}	Input Load Current	V_{IN} = -0.1V to V_{CC} + 1V					10	µA
I_{LO}	Output Leakage Current	V_{OUT} = -0.1V to V_{CC} + 0.1V					10	µA
I_{CC}	Power Supply Current, Standby	V_{CC} = Max, V_{IN} = Max, Outputs Open	C-7, -10	Com.		125	180	mA
				Ind., Mil.		135	190	mA
			C-15	Com.		125	180	mA
				Ind., Mil.		135	190	mA
			CL-15	Com.		0.12	1	mA
				Ind.		0.15	2	mA
I_{OS}[(1)]	Output Short Circuit Current	V_{OUT} = 0.5V					-120	mA
V_{IL}	Input Low Voltage	4.5 ≤V_{CC} ≤5.5V			-0.6		0.8	V
V_{IH}	Input High Voltage				2.0		V_{CC} + 0.75	V
V_{OL}	Output Low Voltage	V_{IN} = V_{IH} or V_{IL}, V_{CC} = Min	I_{OL} = 16 mA	Com., Ind.			0.5	V
			I_{OL} = 12 mA	Mil.			0.5	V
			I_{OL} = 24 mA	Com.			0.8	V
V_{OH}	Output High Voltage	V_{IN} = V_{IH} or V_{IL}, V_{CC} = Min	I_{OH} = -4.0 mA		2.4			V

Note: 1. Not more than one output at a time should be shorted. Duration of short circuit test should not exceed 30 sec.

13. Input Test Waveforms and Measurement Levels

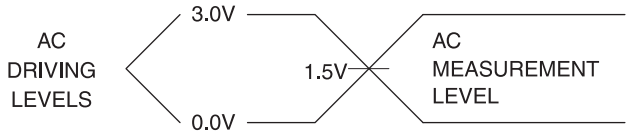

t_R, t_F < 3 ns (10% to 90%)

14. Output Test Load

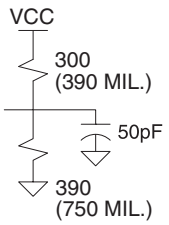

15. AC Waveforms, Product Term Clock[1]

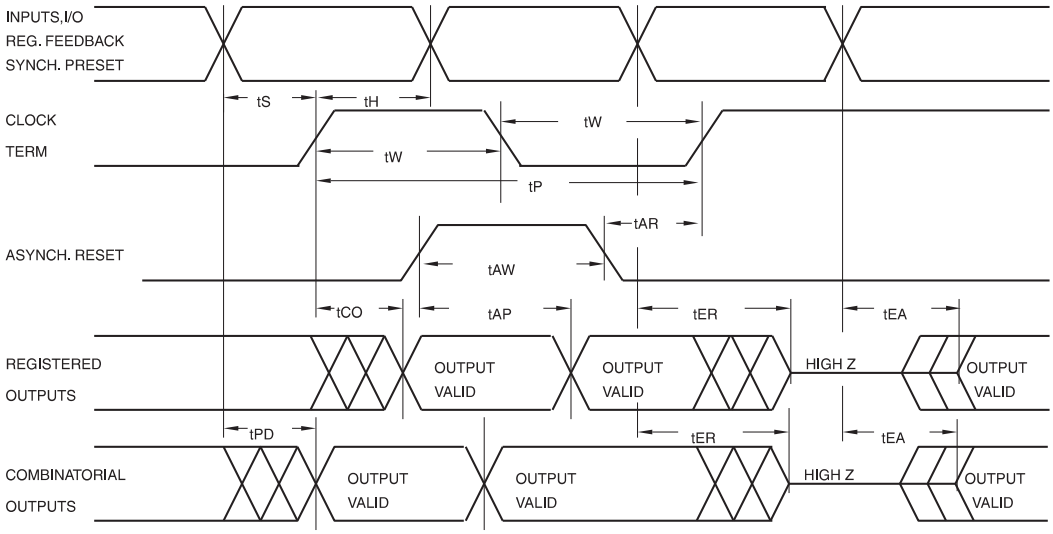

Note: 1. Timing measurement reference is 1.5V. Input AC driving levels are 0.0V and 3.0V, unless otherwise specified.

16. AC Characteristics, Product Term Clock[1]

Symbol	Parameter	-7		-10		C/CL-15		Units
		Min	Max	Min	Max	Min	Max	
t_{PD}	Input or Feedback to Non-registered Output		7.5		10		15	ns
t_{EA}	Input to Output Enable		7.5		10		15	ns
t_{ER}	Input to Output Disable		7.5		10		15	ns
t_{CO}	Clock to Output	3	7.5	4	10	5	12	ns
t_{CF}	Clock to Feedback	1	5	4	7.5	5	9	ns
t_S	Input Setup Time	3		4		8/12		ns
t_{SF}	Feedback Setup Time	3		4		7		ns
t_H	Hold Time	1		2		5		ns
t_P	Clock Period	7		11		14		ns
t_W	Clock Width	3.5		5.5		7		ns
f_{MAX}	External Feedback $1/(t_S + t_{CO})$		95		71		50/41	MHz
	Internal Feedback $1/(t_{SF} + t_{CF})$		125		86		62	MHz
	No Feedback $1/(t_P)$		142		90		71	MHz
t_{AW}	Asynchronous Reset Width	5		10		15		ns
t_{AR}	Asynchronous Reset Recovery Time	3		10		15		ns
t_{AP}	Asynchronous Reset to Registered Output Reset		8		12		15	ns
t_{SP}	Setup Time, Synchronous Preset	4		7		8		ns

Note: 1. See ordering information for valid part numbers.

17. AC Waveforms, Input Pin Clock[1]

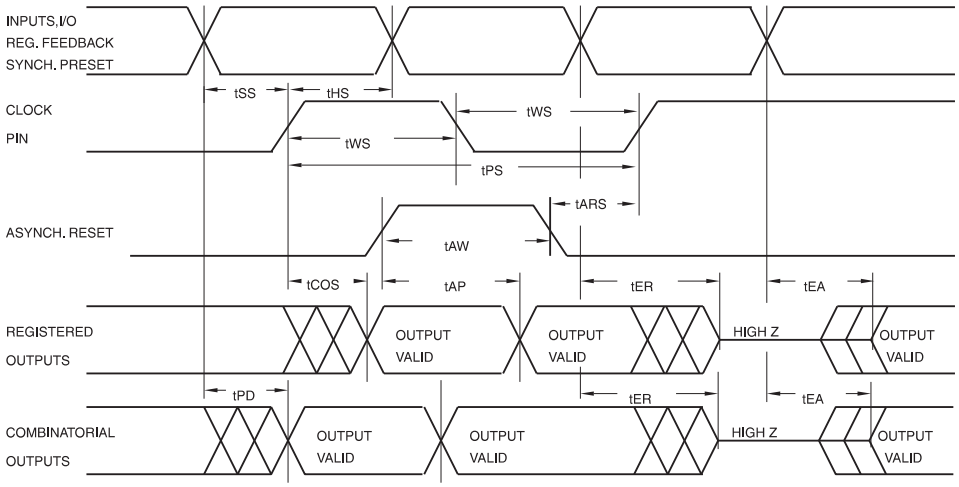

Note: 1. Timing measurement reference is 1.5V. Input AC driving levels are 0.0V and 3.0V, unless otherwise specified.

18. AC Characteristics, Input Pin Clock

Symbol	Parameter	-7		-10		C/CL-15		Units
		Min	Max	Min	Max	Min	Max	
t_{PD}	Input or Feedback to Non-registered Output		7.5		10		15	ns
t_{EA}	Input to Output Enable		7.5		10		15	ns
t_{ER}	Input to Output Disable		7.5		10		15	ns
t_{COS}	Clock to Output	0	6.5	0	7	0	10	ns
t_{CFS}	Clock to Feedback	0	3.5	0	5	0	5.5	ns
t_{SS}	Input Setup Time	4		5		8/12.5		ns
t_{SFS}	Feedback Setup Time	4		5		7		ns
t_{HS}	Hold Time	0		0		0		ns
t_{PS}	Clock Period	7		10		12		ns
t_{WS}	Clock Width	3.5		5		6		ns
f_{MAXS}	External Feedback $1/(t_{SS} + t_{COS})$		95		83		55/44	MHz
	Internal Feedback $1/(t_{SFS} + t_{CFS})$		133		100		80	MHz
	No Feedback $1/(t_{PS})$		142		100		83	MHz
t_{AW}	Asynchronous Reset Width	5		10		15		ns
t_{ARS}	Asynchronous Reset Recovery Time	5		10		15		ns
t_{AP}	Asynchronous Reset to Registered Output Reset		8		10		15	ns
t_{SPS}	Setup Time, Synchronous Preset	5		5/9		11		ns

19. Functional Logic Diagram ATF750C, Upper Half

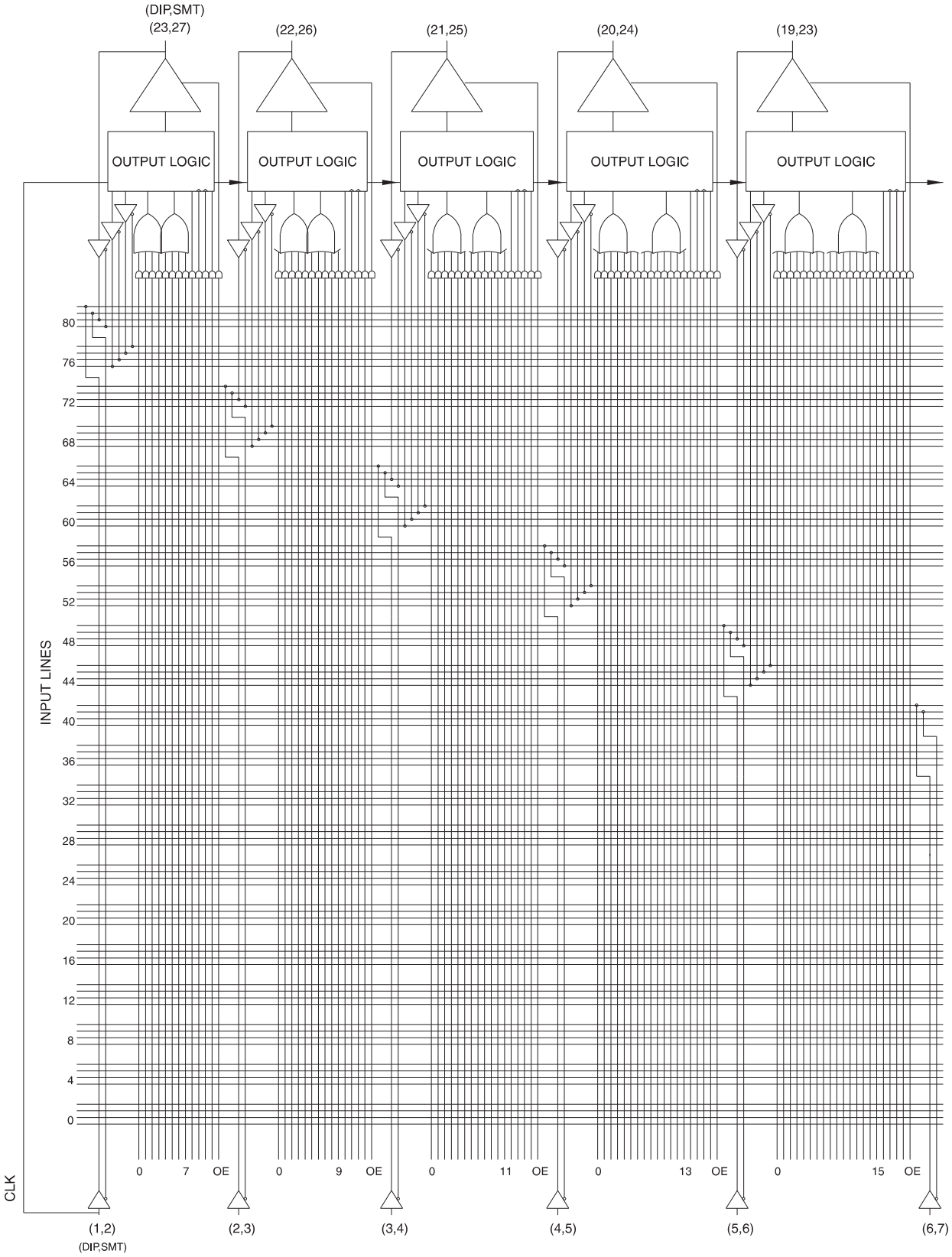

20. Functional Logic Diagram ATF750C, Lower Half

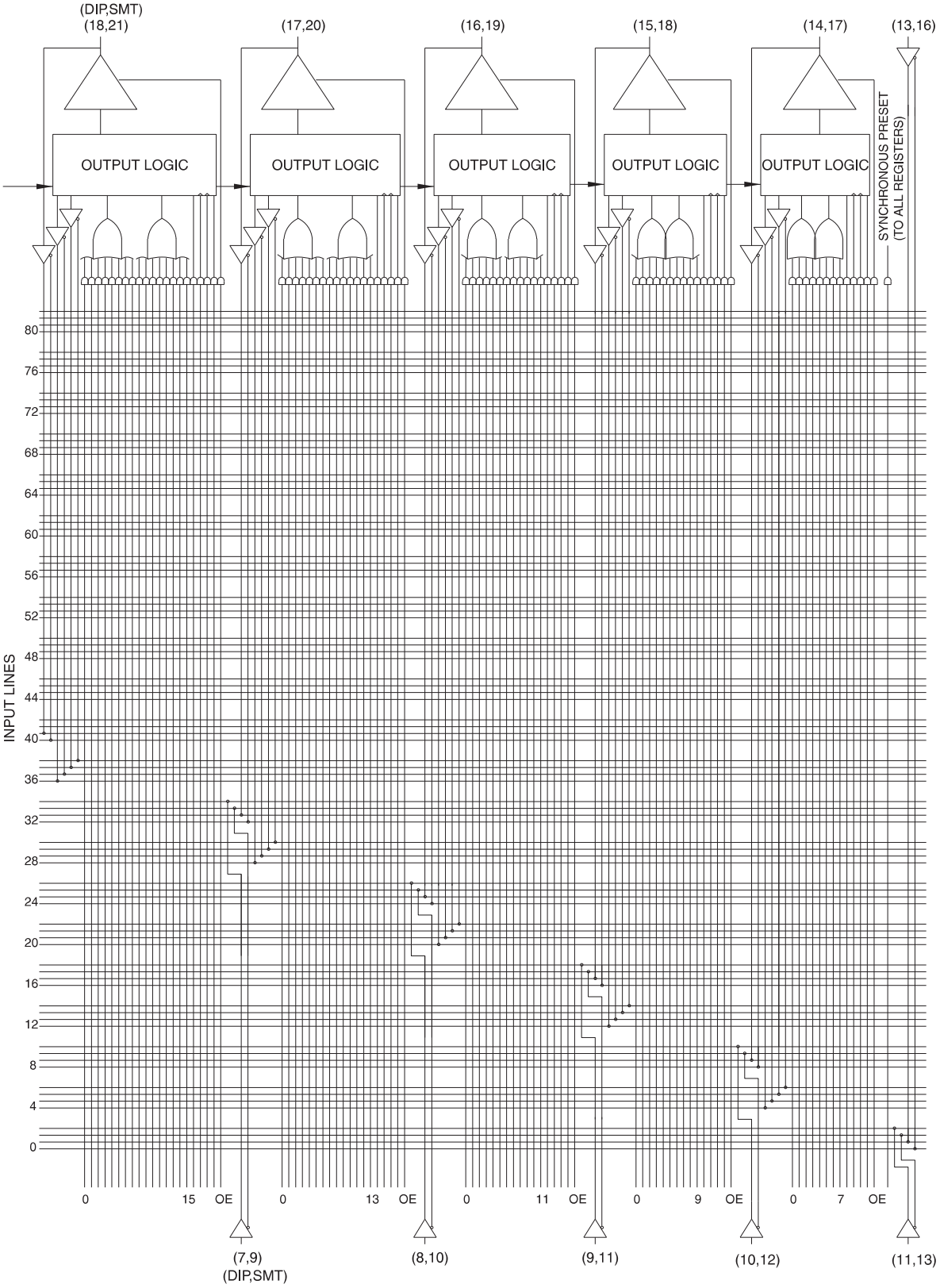

21. Power-up Reset

The registers in the ATF750C(L)s are designed to reset during power-up. At a point delayed slightly from V_{CC} crossing V_{RST}, all registers will be reset to the low state. The output state will depend on the polarity of the output buffer.

This feature is critical for state machine initialization. However, due to the asynchronous nature of reset and the uncertainty of how V_{CC} actually rises in the system, the following conditions are required:

1. The V_{CC} rise must be monotonic,
2. After reset occurs, all input and feedback setup times must be met before driving the clock terms or pin high, and
3. The clock pin, or signals from which clock terms are derived, must remain stable during t_{PR}.

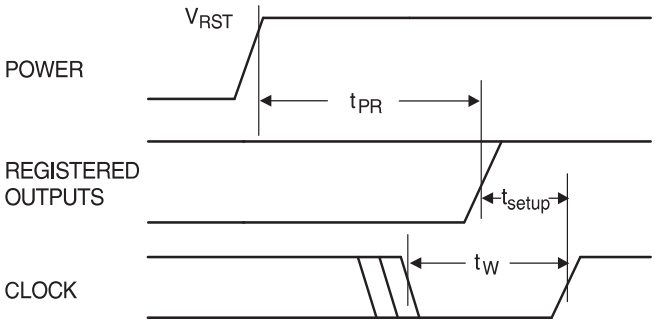

Parameter	Description	Typ	Max	Units
t_{PR}	Power-up Reset Time	600	1000	ns
V_{RST}	Power-up Reset Voltage	2.0	4.5	V

22. Pin Capacitance

f = 1 MHz, T = 25°C[1]

	Typ	Max	Units	Conditions
C_{IN}	5	8	pF	V_{IN} = 0V
C_{OUT}	6	8	pF	V_{OUT} = 0V

Note: 1. Typical values for nominal supply voltage. This parameter is only sampled and is not 100% tested.

23. Using the ATF750C's Many Advanced Features

The ATF750C(L)'s advanced flexibility packs more usable gates into 24 pins than any other logic device. The ATF750C(L)s start with the popular 22V10 architecture, and add several enhanced features:

- **Selectable D- and T-type Registers**
  Each ATF750C(L) flip-flop can be individually configured as either D- or T-type. Using the T-type configuration, JK and SR flip-flops are also easily created. These options allow more efficient product term usage.
- **Selectable Asynchronous Clocks**
  Each of the ATF750C(L)'s flip-flops may be clocked by its own clock product term or directly from Pin 1 (SMD Lead 2). This removes the constraint that all registers must use the same clock. Buried state machines, counters and registers can all coexist in one device while running on separate clocks. Individual flip-flop clock source selection further allows mixing higher performance pin clocking and flexible product term clocking within one design.
- **A Full Bank of Ten More Registers**
  The ATF750C(L) provides two flip-flops per output logic cell for a total of 20. Each register has its own sum term, its own reset term and its own clock term.
- **Independent I/O Pin and Feedback Paths**
  Each I/O pin on the ATF750C(L) has a dedicated input path. Each of the 20 registers has its own feedback terms into the array as well. This feature, combined with individual product terms for each I/O's output enable, facilitates true bi-directional I/O design.

24. Synchronous Preset and Asynchronous Reset

One synchronous preset line is provided for all 20 registers in the ATF750C(L). The appropriate input signals to cause the internal clocks to go to a high state must be received during a synchronous preset. Appropriate setup and hold times must be met, as shown in the switching waveform diagram.

An individual asynchronous reset line is provided for each of the 20 flip-flops. Both master and slave halves of the flip-flops are reset when the input signals received force the internal resets high.

25. Software Support

All family members of the ATF750C(L) can be designed with Atmel®-WinCUPL.

Additionally, the ATF750C may be programmed to perform the ATV750(L) functional subset (no T-type flip-flops, pin clocking or D/T2 feedback) using the ATV750 JEDEC file. In this case, the ATF750C becomes a direct replacement or speed upgrade for the ATV750. The ATF750C is a direct replacement for the ATV750(L) and the ATV750B(L).

26. Software Compiler Mode Selection

Table 26-1. Software Compiler Mode Selection

Device	Atmel - WinCupL Device Mnemonic	Pin-keeper
ATF750C-DIP	V750C V750CPPK	Disabled Enabled
ATF750C-PLCC	V750LCC V750CPPKLCC	Disabled Enabled

27. Third Party Programmer Support

Table 27-1. Third Party Programmer Support

Device	Description
ATF750C (V750)	**V750 Cross-programming**. JEDEC file compatible with standard V750 JEDEC file (total fuses in JEDEC file = 14394). The Programmer will automatically program “0”s into the User Rrow (UES), and disable the Pin-keeper features. The Fuse Checksum will be the same as the old ATV750/L file. This device type is recommended for customers that are directly migrating from an ATV750/L device to an ATF750C/CL device.
ATF750C (V750B)	**V750B Cross-programming**. JEDEC file compatible with standard V750B JEDEC file (total fuses in JEDEC file = 14435). The Programmer will automatically program “0”s into the User Row (UES), and disable the Pin-keeper feature. The Fuse Checksum will be the same as the old ATV750B/BL file. This device type is recommended for customers that are directly migrating from an ATV750B/BL device to an ATF750C/CL device.
ATF750C	Programming of User Row (UES) bits supported and Pin-keeper bit is user-programmable. (Total fuses in JEDEC file = 14504). This is the default device type and is recommended for users that have re-compiled their source design files to specifically target the ATF750C device.

Note: 1. The ATF750C has 14,504 JEDEC fuses.

28. Security Fuse Usage

A single fuse is provided to prevent unauthorized copying of the ATF750C(L) fuse patterns. Once the security fuse is programmed, all fuses will appear programmed during verify.

The security fuse should be programmed last, as its effect is immediate.

29. Preload of Registered Outputs

The ATF750C(L)'s registers are provided with circuitry to allow loading of each register asynchronously with either a high or a low. This feature will simplify testing since any state can be forced into the registers to control test sequencing. A V_{IH} level on the I/O pin will force the register high; a V_{IL} will force it low, independent of the output polarity. The PRELOAD state is entered by placing a 10.25V to 10.75V signal on pin 8 on DIPs, and lead 10 on SMDs. When the clock term is pulsed high, the data on the I/O pins is placed into the register chosen by the select pin

.

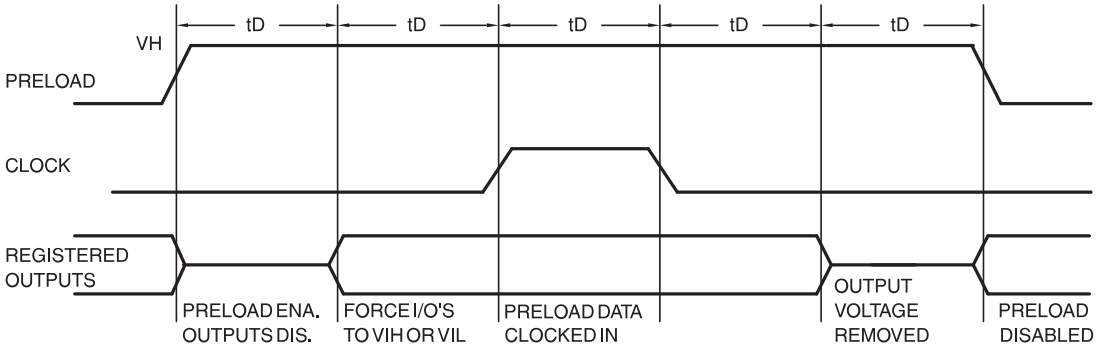

Level Forced on Registered Output Pin during Preload Cycle	Select Pin State	Register #0 State after Cycle	Register #1 State after Cycle
V_{IH}	Low	High	X
V_{IL}	Low	Low	X
V_{IH}	High	X	High
V_{IL}	High	X	Low

ATF750C SUPPLY CURRENT VS. SUPPLY VOLTAGE (T_A = 25°C)

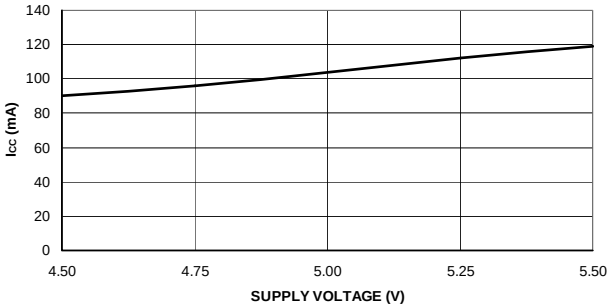

ATF750CL SUPPLY CURRENT VS. SUPPLY VOLTAGE (T_A = 25°C)

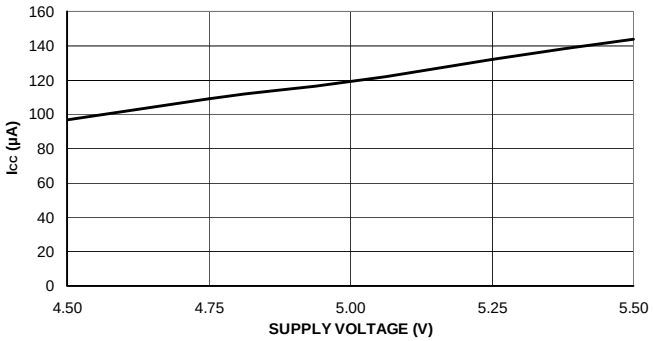

SUPPLY CURRENT VS. FREQUENCY STANDARD POWER (T_A = 25°C)

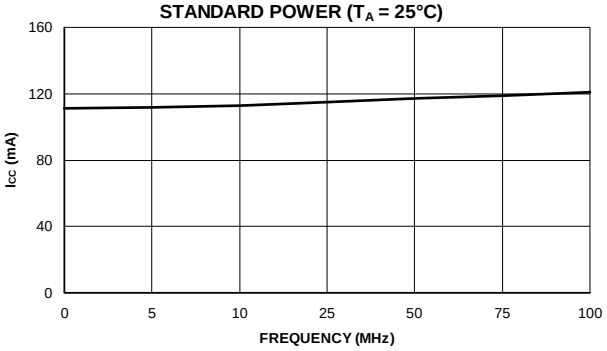

SUPPLY CURRENT VS. FREQUENCY LOW-POWER ("L") VERSION (T_A = 25°C)

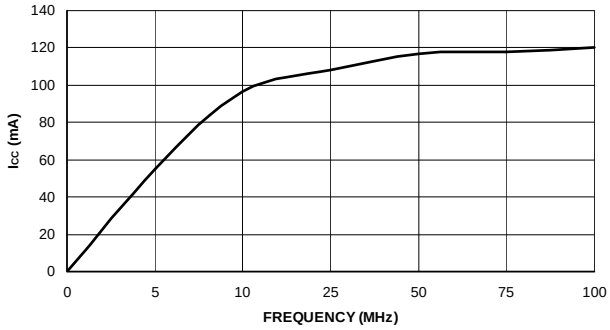

ATF750C/CL OUTPUT SOURCE CURRENT VS. SUPPLY VOLTAGE (V_{OH} = 2.4V)

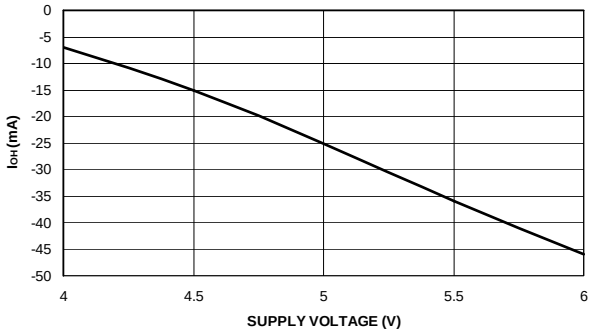

ATF750C/CL OUTPUT SOURCE CURRENT VS. OUTPUT VOLTAGE (V_{CC} = 5V, T_A = 25°C)

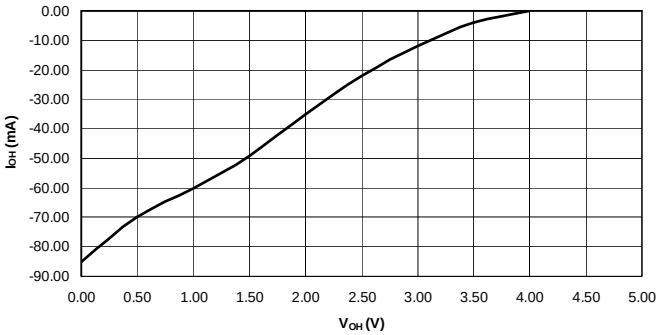

ATF750C/CL OUTPUT SINK CURRENT VS. SUPPLY VOLTAGE (V_{OL} = 0.5V)

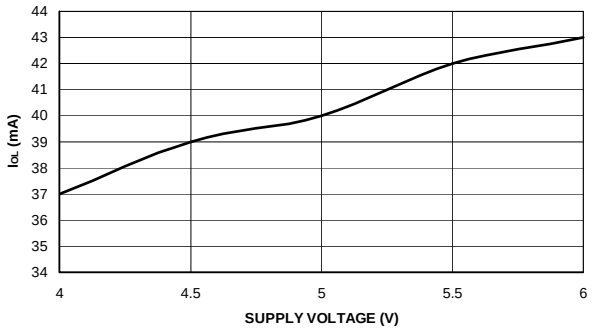

ATF750C/CL OUTPUT SINK CURRENT VS. OUTPUT VOLTAGE (V_{CC} = 5V, T_A = 25°C)

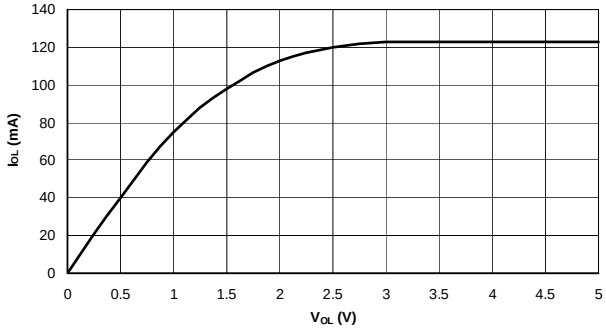

ATF750C/CL OUTPUT SINK CURRENT VS. OUTPUT VOLTAGE (V_{CC} = 5V, T_A = 25°C)

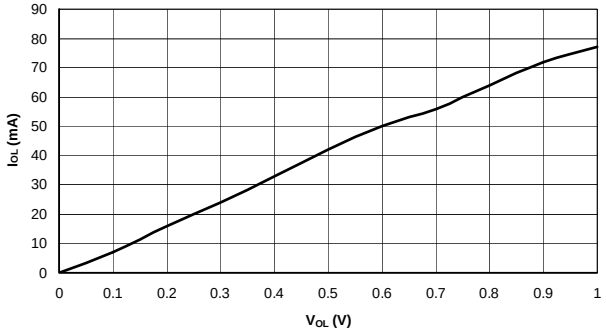

ATF750C/CL INPUT CURRENT VS. INPUT VOLTAGE (V_{CC} = 5V,T_A = 25°C)

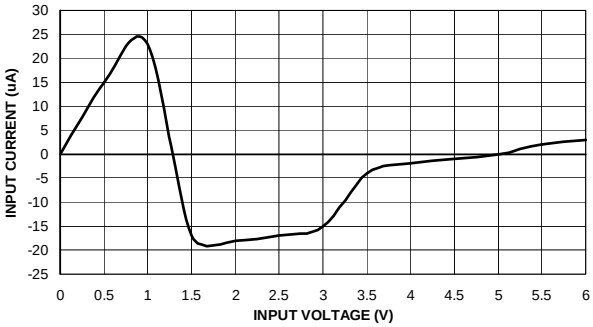

ATF750C/CL INPUT CURRENT VS. INPUT VOLTAGE (V_{CC} = 5V,T_A = 25°C) WITHOUT PIN-KEEPER

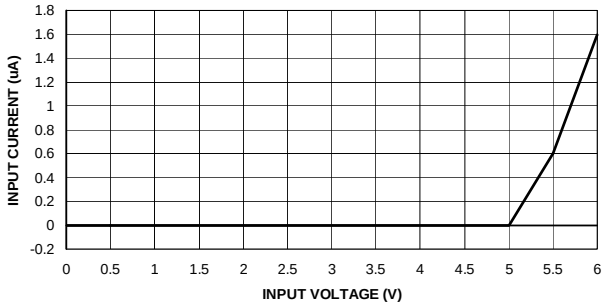

ATF750C/CL INPUT CLAMP CURRENT VS. INPUT VOLTAGE (V_{CC} = 5V,T_A = 35°C)

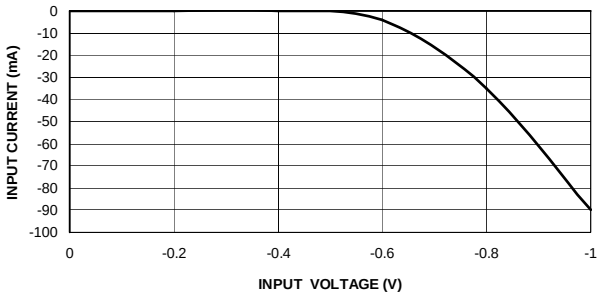

30. ATF750C(L) Military Ordering Information

t_{PD} (ns)	t_{COS} (ns)	Ext. f_{MAXS} (MHz)	Ordering Code	Package	Operation Range
10	7	83	ATF750C-10GM/883 ATF750C-10NM/883 5962-0720101MLA 5962-0720101M3A	24D3 28L 24D3 28L	Military/883 (-55° C to 125° C) Class B, Fully Compliant
15	10	55	ATF750C-15GM/883 ATF750C-15NM/883 5962-0720102MLA 5962-0720102M3A	24D3 28L 24D3 28L	

Note: 1. Special order only: TSSOP package requires special thermal management.

31. ATF750C(L) Green Package Options (Pb/Halide-free/RoHS Compliant)

t_{PD} (ns)	t_{COS} (ns)	Ext. f_{MAXS} (MHz)	Ordering Code	Package	Operation Range
7.5	6.5	95	ATF750C-7JX ATF750C-7PX ATF750C-7SX	28J 24P3 24S	Commercial (0° C to 70° C)
10	7	83	ATF750C-10JU ATF750C-10PU ATF750C-10SU ATF750C-10XU	28J 24P3 24S 24X	Industrial (-40° C to 85° C)
15	10	44	ATF750CL-15JU ATF750CL-15PU ATF750CL-15SU ATF750CL-15XU	28J 24P3 24S 24X	Industrial (-40° C to 85° C)

32. Using “C” Product for Industrial

To use commercial product for industrial ranges, down-grade one speed grade from the Industrial to the Commercial device (7 ns “X” = 10 ns “U”) and de-rate power by 30%.

Package Type	
24D3	24-lead, 0.300" Wide, Non-windowed Ceramic Dual Inline Package (CerDIP)
28J	28-lead, Plastic J-leaded Chip Carrier (PLCC)
28L	28-pad, Non-Windowed Ceramic Leadless Chip Carrier (LCC)
24P3	24-lead, 0.300" Wide, Plastic Dual Inline Package (PDIP)
24S	24-lead, 0.300" Wide, Plastic Gull Wing Small Outline (SOIC)
24X[1]	24-lead, 0.173" Wide, Thin Shrink Small Outline (TSSOP)

Note: 1. Special order only: TSSOP package requires special thermal management.

33. Packaging Information

33.1 24D3 – CerDIP

Dimensions in Millimeters and (Inches).
Controlling dimension: Inches.
MIL-STD 1835 D-9 Config A (Glass Sealed)

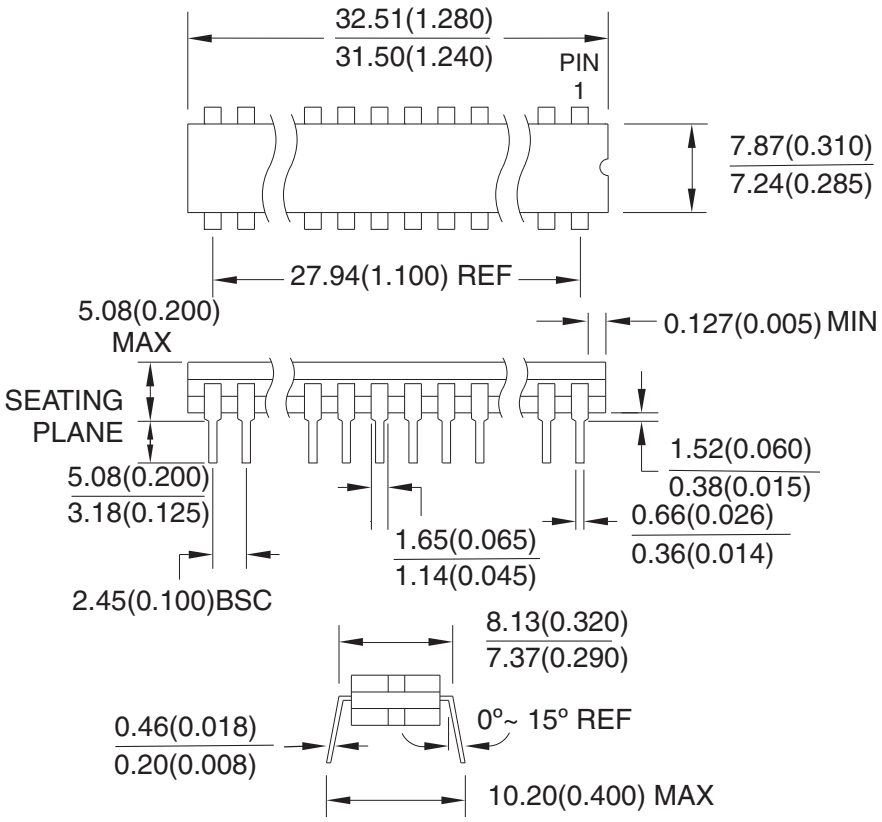

10/21/03

	TITLE	DRAWING NO.	REV.
2325 Orchard Parkway San Jose, CA 95131	**24D3**, 24-lead, 0.300" Wide. Non-windowed, Ceramic Dual Inline Package (Cerdip)	24D3	B

33.2 28J – PLCC

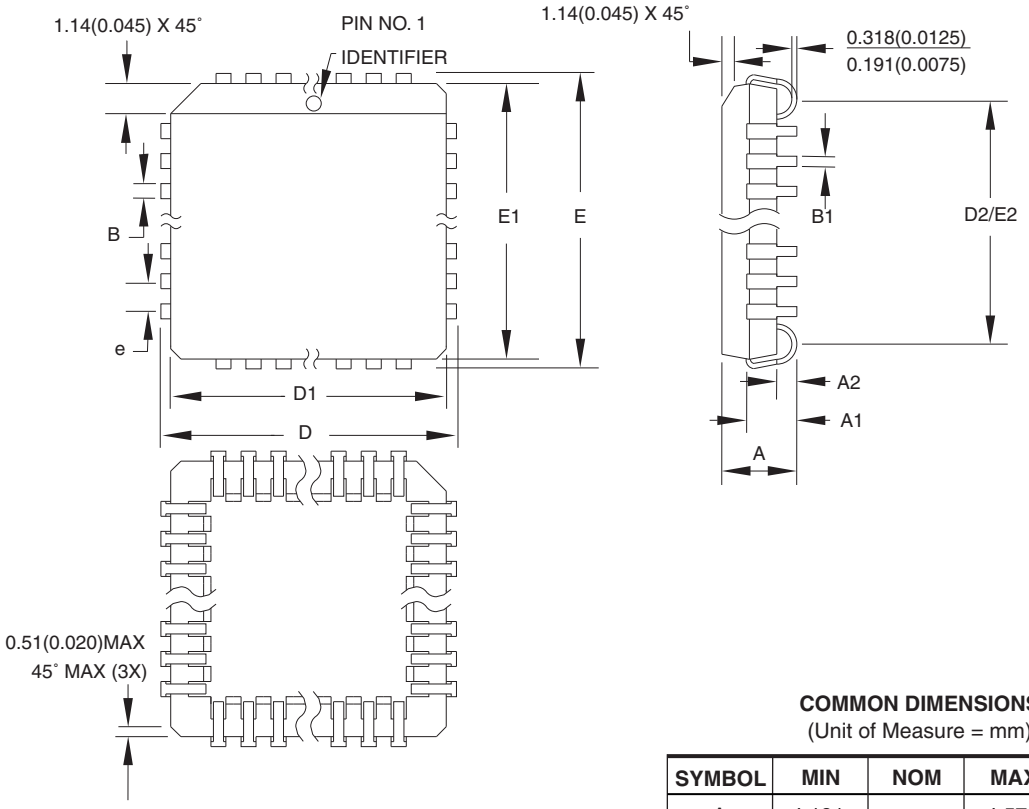

COMMON DIMENSIONS
(Unit of Measure = mm)

SYMBOL	MIN	NOM	MAX	NOTE
A	4.191	–	4.572	
A1	2.286	–	3.048	
A2	0.508	–	–	
D	12.319	–	12.573	
D1	11.430	–	11.582	Note 2
E	12.319	–	12.573	
E1	11.430	–	11.582	Note 2
D2/E2	9.906	–	10.922	
B	0.660	–	0.813	
B1	0.330	–	0.533	
e	1.270 TYP			

Notes:
1. This package conforms to JEDEC reference MS-018, Variation AB.
2. Dimensions D1 and E1 do not include mold protrusion. Allowable protrusion is .010"(0.254 mm) per side. Dimension D1 and E1 include mold mismatch and are measured at the extreme material condition at the upper or lower parting line.
3. Lead coplanarity is 0.004" (0.102 mm) maximum.

10/04/01

	TITLE	DRAWING NO.	REV.
2325 Orchard Parkway San Jose, CA 95131	**28J**, 28-lead, Plastic J-leaded Chip Carrier (PLCC)	28J	B

33.3 28L – LCC

Dimensions in Millimeters and (Inches).
Controlling dimension: Inches.
MIL-STD 1835 C-4

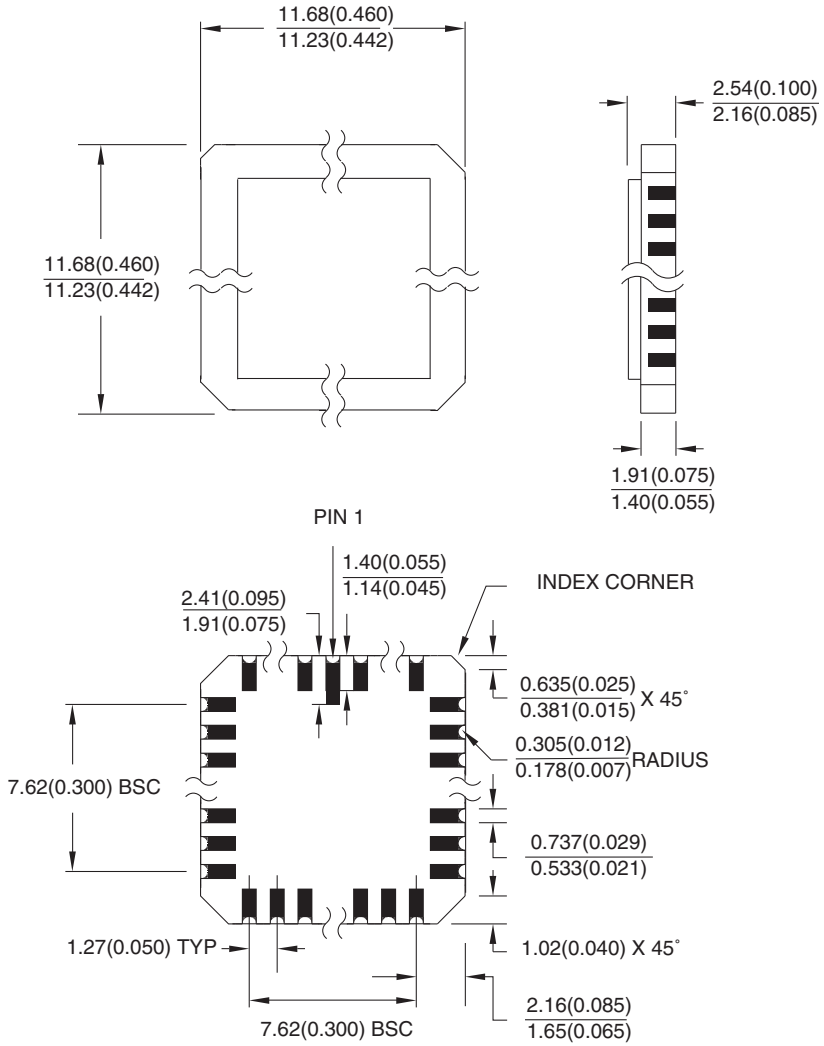

10/21/03

2325 Orchard Parkway San Jose, CA 95131	**TITLE** **28L**, 28-pad, Non-windowed, Ceramic Lid, Leadless Chip Carrier (LCC)	**DRAWING NO.** 28L	**REV.** B

33.4 24P3 – PDIP

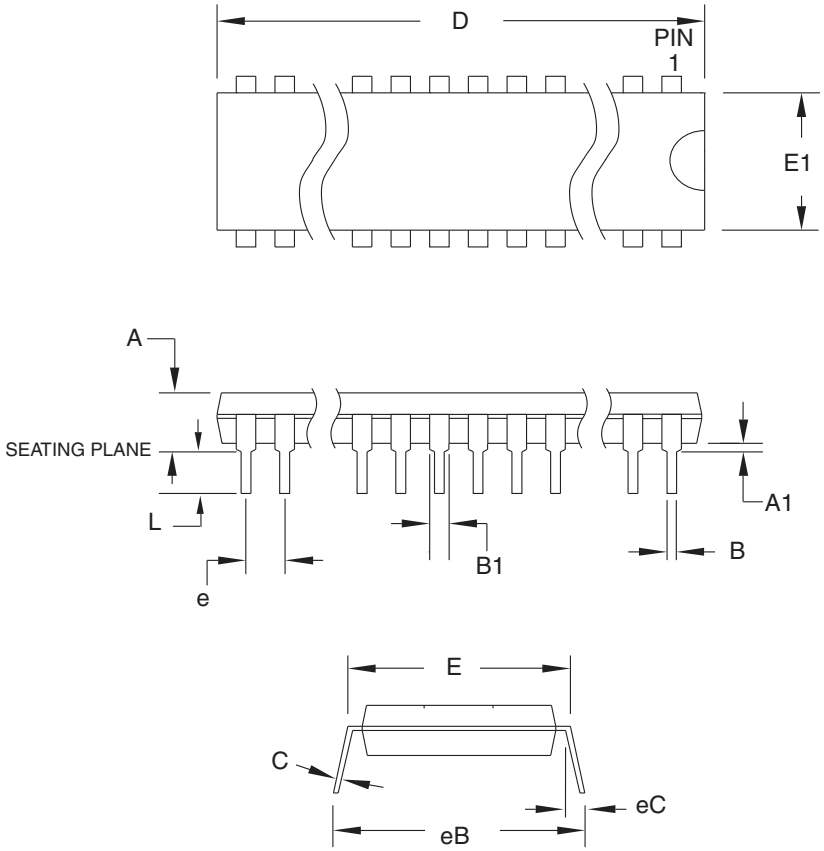

COMMON DIMENSIONS
(Unit of Measure = mm)

SYMBOL	MIN	NOM	MAX	NOTE
A	–	–	5.334	
A1	0.381	–	–	
D	31.623	–	32.131	Note 2
E	7.620	–	8.255	
E1	6.096	–	7.112	Note 2
B	0.356	–	0.559	
B1	1.270	–	1.651	
L	2.921	–	3.810	
C	0.203	–	0.356	
eB	–	–	10.922	
eC	0.000	–	1.524	
e	2.540 TYP			

Notes:
1. This package conforms to JEDEC reference MS-001, Variation AF.
2. Dimensions D and E1 do not include mold Flash or Protrusion. Mold Flash or Protrusion shall not exceed 0.25 mm (0.010").

6/1/04

	TITLE	DRAWING NO.	REV.
2325 Orchard Parkway San Jose, CA 95131	**24P3**, 24-lead (0.300"/7.62 mm Wide) Plastic Dual Inline Package (PDIP)	24P3	D

33.5 24S – SOIC

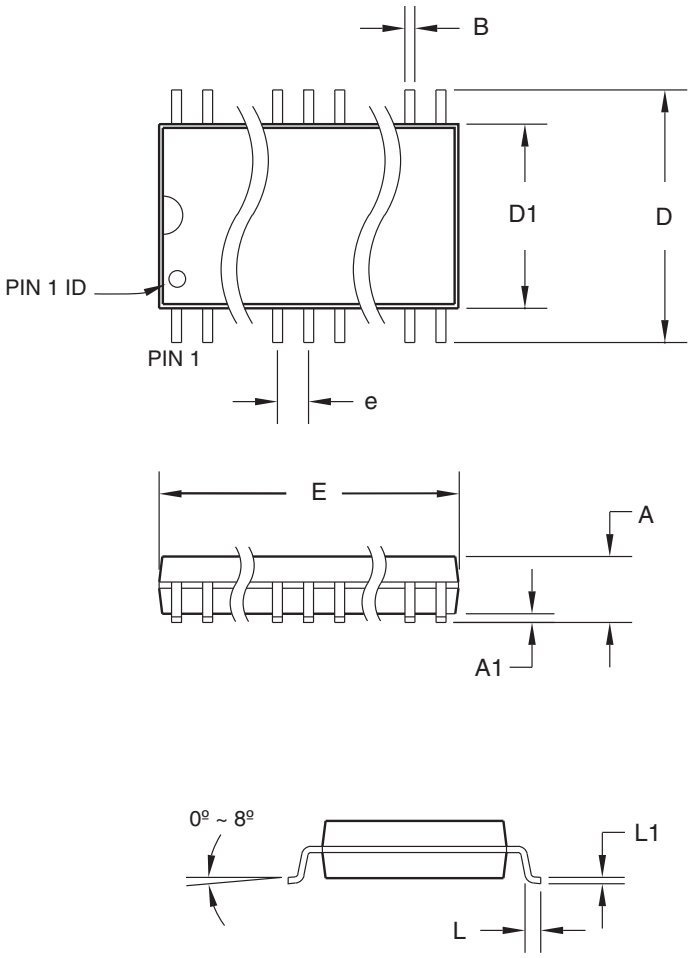

COMMON DIMENSIONS
(Unit of Measure = mm)

SYMBOL	MIN	NOM	MAX	NOTE
A	–	–	2.65	
A1	0.10	–	0.30	
D	10.00	–	10.65	
D1	7.40	–	7.60	
E	15.20	–	15.60	
B	0.33	–	0.51	
L	0.40	–	1.27	
L1	0.23	–	0.32	
e	1.27 BSC			

06/17/2002

	TITLE	DRAWING NO.	REV.
2325 Orchard Parkway San Jose, CA 95131	**24S**, 24-lead (0.300" body) Plastic Gull Wing Small Outline (SOIC)	24S	B

33.6 24X – TSSOP

Dimensions in Millimeter and (Inches)*
JEDEC STANDARD MO-153 AD
Controlling dimension: millimeters

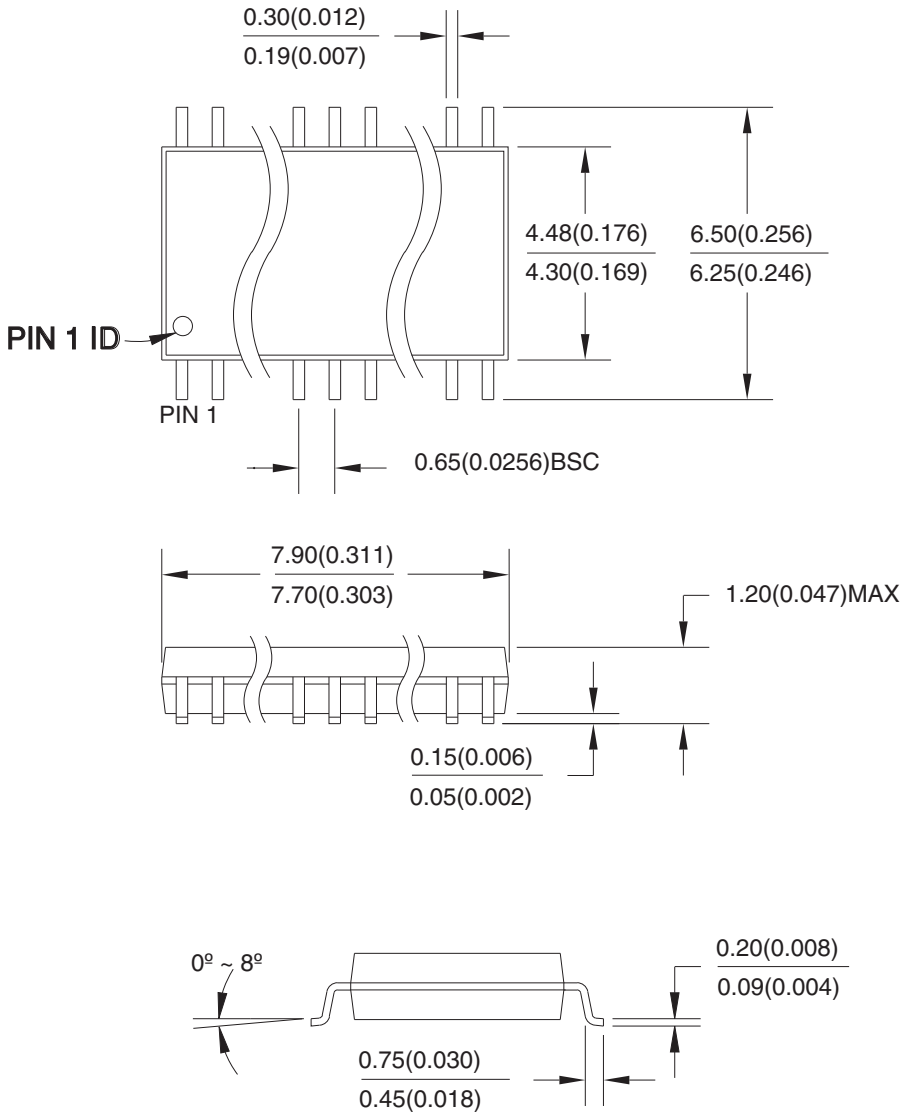

04/11/2001

2325 Orchard Parkway San Jose, CA 95131	**TITLE** **24X**, 24-lead (4.4 mm body width) Plastic Thin Shrink Small Outline Package (TSSOP)	**DRAWING NO.** 24X	**REV.** A

34. Revision History

Revision Level – Release Date	History
K – July 2007	Added military-grade devices. Added fully-green RoHS-compliant devices in select speed grades and packages.
L – November 2008	Removed commercial grade leaded package options.

Headquarters

Atmel Corporation
2325 Orchard Parkway
San Jose, CA 95131
USA
Tel: 1(408) 441-0311
Fax: 1(408) 487-2600

International

Atmel Asia
Unit 1-5 & 16, 19/F
BEA Tower, Millennium City 5
418 Kwun Tong Road
Kwun Tong, Kowloon
Hong Kong
Tel: (852) 2245-6100
Fax: (852) 2722-1369

Atmel Europe
Le Krebs
8, Rue Jean-Pierre Timbaud
BP 309
78054 Saint-Quentin-en-
Yvelines Cedex
France
Tel: (33) 1-30-60-70-00
Fax: (33) 1-30-60-71-11

Atmel Japan
9F, Tonetsu Shinkawa Bldg.
1-24-8 Shinkawa
Chuo-ku, Tokyo 104-0033
Japan
Tel: (81) 3-3523-3551
Fax: (81) 3-3523-7581

Product Contact

Web Site
www.atmel.com

Technical Support
pld@atmel.com

Sales Contact
www.atmel.com/contacts

Literature Requests
www.atmel.com/literature

Disclaimer: The information in this document is provided in connection with Atmel products. No license, express or implied, by estoppel or otherwise, to any intellectual property right is granted by this document or in connection with the sale of Atmel products. **EXCEPT AS SET FORTH IN ATMEL'S TERMS AND CONDITIONS OF SALE LOCATED ON ATMEL'S WEB SITE, ATMEL ASSUMES NO LIABILITY WHATSOEVER AND DISCLAIMS ANY EXPRESS, IMPLIED OR STATUTORY WARRANTY RELATING TO ITS PRODUCTS INCLUDING, BUT NOT LIMITED TO, THE IMPLIED WARRANTY OF MERCHANTABILITY, FITNESS FOR A PARTICULAR PURPOSE, OR NON-INFRINGEMENT. IN NO EVENT SHALL ATMEL BE LIABLE FOR ANY DIRECT, INDIRECT, CONSEQUENTIAL, PUNITIVE, SPECIAL OR INCIDENTAL DAMAGES (INCLUDING, WITHOUT LIMITATION, DAMAGES FOR LOSS OF PROFITS, BUSINESS INTERRUPTION, OR LOSS OF INFORMATION) ARISING OUT OF THE USE OR INABILITY TO USE THIS DOCUMENT, EVEN IF ATMEL HAS BEEN ADVISED OF THE POSSIBILITY OF SUCH DAMAGES.** Atmel makes no representations or warranties with respect to the accuracy or completeness of the contents of this document and reserves the right to make changes to specifications and product descriptions at any time without notice. Atmel does not make any commitment to update the information contained herein. Unless specifically provided otherwise, Atmel products are not suitable for, and shall not be used in, automotive applications. Atmel's products are not intended, authorized, or warranted for use as components in applications intended to support or sustain life.

© 2008 Atmel Corporation. All rights reserved. Atmel®, Atmel logo and combinations thereof, and others are registered trademarks or trademarks of Atmel Corporation or its subsidiaries. Other terms and product names may be trademarks of others.

0776L–PLD–11/08

Мы молодая и активно развивающаяся компания в области поставок электронных компонентов. Мы поставляем электронные компоненты отечественного и импортного производства напрямую от производителей и с крупнейших складов мира.

Благодаря сотрудничеству с мировыми поставщиками мы осуществляем комплексные и плановые поставки широчайшего спектра электронных компонентов.

Собственная эффективная логистика и склад в обеспечивает надежную поставку продукции в точно указанные сроки по всей России.

Мы осуществляем техническую поддержку нашим клиентам и предпродажную проверку качества продукции. На все поставляемые продукты мы предоставляем гарантию .

Осуществляем поставки продукции под контролем ВП МО РФ на предприятия военно-промышленного комплекса России , а также работаем в рамках 275 ФЗ с открытием отдельных счетов в уполномоченном банке. Система менеджмента качества компании соответствует требованиям ГОСТ ISO 9001.

Минимальные сроки поставки, гибкие цены, неограниченный ассортимент и индивидуальный подход к клиентам являются основой для выстраивания долгосрочного и эффективного сотрудничества с предприятиями радиоэлектронной промышленности, предприятиями ВПК и научно-исследовательскими институтами России.

С нами вы становитесь еще успешнее!

Наши контакты:

Телефон: +7 812 627 14 35

Электронная почта: sales@st-electron.ru

Адрес: 198099, Санкт-Петербург, Промышленная ул, дом № 19, литера Н, помещение 100-Н Офис 331