W25M512JV

Featuring

3V 512M-BIT (2 x 256M-BIT)

SERIAL MCP FLASH MEMORY

With Multi I/O SPI & Concurrent Operations

Publication Release Date: September 06, 2017
- Revision D

Table of Contents

1. GENERAL DESCRIPTIONS 6
2. FEATURES 6
3. PACKAGE TYPES AND PIN CONFIGURATIONS 7
   - 3.1 Pad Configuration WSON 8x6-mm 7
   - 3.2 Pad Description WSON 8x6-mm 7
   - 3.3 Pin Configuration SOIC 300-mil 8
   - 3.4 Pin Description SOIC 300-mil 8
   - 3.5 Ball Configuration TFBGA 8x6-mm (5x5 or 6x4 Ball Array) 9
   - 3.6 Ball Description TFBGA 8x6-mm 9
4. DEVICE CONFIGURATION & PIN DESCRIPTIONS 10
   - 4.1 Serial MCP (SpiStack®) Device Configuration 10
   - 4.2 Chip Select (/CS) 10
   - 4.3 Serial Input & Output (DI, DO and IO0, IO1, IO2, IO3) 10
   - 4.4 Serial Clock (CLK) 10
   - 4.5 Reset (/RESET) 10
5. SINGLE DIE (W25Q256JV) BLOCK DIAGRAM 11
6. FUNCTIONAL DESCRIPTIONS 12
   - 6.1 Device Operations 12
     - 6.1.1 Stacked Die Operations 12
     - 6.1.2 Standard SPI Instructions 12
     - 6.1.3 Dual & Quad SPI Instructions 13
     - 6.1.4 3-Byte / 4-Byte Address Modes 13
     - 6.1.5 Software Reset & Hardware /RESET pin 13
   - 6.2 Write Protection 14
7. STATUS AND CONFIGURATION REGISTERS 15
   - 7.1 Status Registers 15
     - 7.1.1 Program/Erase/Write In Progress (BUSY) – *Status Only* 15
     - 7.1.2 Write Enable Latch (WEL) – *Status Only* 15
     - 7.1.3 Block Protect Bits (BP3, BP2, BP1, BP0) – *Volatile/Non-Volatile Writable* 16
     - 7.1.4 Top/Bottom Block Protect (TB) – *Volatile/Non-Volatile Writable* 16
     - 7.1.5 Complement Protect (CMP) – *Volatile/Non-Volatile Writable* 16
     - 7.1.6 Status Register Lock (SRL) – *Volatile/Non-Volatile OTP Writable* 16
     - 7.1.7 Erase/Program Suspend Status (SUS) – *Status Only* 17
     - 7.1.8 Security Register Lock Bits (LB3, LB2, LB1) – *Volatile/Non-Volatile OTP Writable* 17
     - 7.1.9 Current Address Mode (ADS) – *Status Only* 17
     - 7.1.10 Power-Up Address Mode (ADP) – *Non-Volatile Writable* 17
     - 7.1.11 Write Protect Selection (WPS) – *Volatile/Non-Volatile Writable* 17
     - 7.1.12 Output Driver Strength (DRV1, DRV0) – *Volatile/Non-Volatile Writable* 18
     - 7.1.13 Reserved Bits – *Non Functional* 18
     - 7.1.14 Single Die W25Q256JV Status Register Memory Protection (WPS = 0, CMP = 0) 19
     - 7.1.15 Single Die W25Q256JV Status Register Memory Protection (WPS = 0, CMP = 1) 20

7.1.16 Single Die W25Q256JV Individual Block Memory Protection (WPS=1) 21
7.2 Extended Address Register – *Volatile Writable Only* 22
8. INSTRUCTIONS 23
8.1 Device ID and Instruction Set Tables 23
8.1.1 Manufacturer and Device Identification 23
8.1.2 Instruction Set Table 1 (Standard Single SPI, 3-Byte Address Mode ADS=0)(1) 24
8.1.3 Instruction Set Table 2 (Dual/Quad SPI Instructions, 3-Byte Address Mode ADS=0) 25
8.1.4 Instruction Set Table 3 (Standard Single SPI, 4-Byte Address Mode ADS=1)(1) 26
8.1.5 Instruction Set Table 4 (Dual/Quad SPI Instructions, 4-Byte Address Mode ADS=1) 27
8.2 Instruction Descriptions 29
8.2.1 Software Die Select (C2h) 29
8.2.2 Write Enable (06h) 30
8.2.3 Write Enable for Volatile Status Register (50h) 30
8.2.4 Write Disable (04h) 31
8.2.5 Read Status Register-1 (05h), Status Register-2 (35h) & Status Register-3 (15h) 31
8.2.6 Write Status Register-1 (01h), Status Register-2 (31h) & Status Register-3 (11h) 32
8.2.7 Read Extended Address Register (C8h) 34
8.2.8 Write Extended Address Register (C5h) 35
8.2.9 Enter 4-Byte Address Mode (B7h) 36
8.2.10 Exit 4-Byte Address Mode (E9h) 36
8.2.11 Read Data (03h) 37
8.2.12 Read Data with 4-Byte Address (13h) 38
8.2.13 Fast Read (0Bh) 39
8.2.14 Fast Read with 4-Byte Address (0Ch) 40
8.2.16 Fast Read Dual Output (3Bh) 41
8.2.17 Fast Read Dual Output with 4-Byte Address (3Ch) 42
8.2.18 Fast Read Quad Output (6Bh) 43
8.2.19 Fast Read Quad Output with 4-Byte Address (6Ch) 44
8.2.20 Fast Read Dual I/O (BBh) 45
8.2.21 Fast Read Dual I/O with 4-Byte Address (BCh) 46
8.2.22 Fast Read Quad I/O (EBh) 47
8.2.23 Fast Read Quad I/O with 4-Byte Address (ECh) 48
8.2.25 Set Burst with Wrap (77h) 49
8.2.26 Page Program (02h) 50
8.2.27 Page Program with 4-Byte Address (12h) 51
8.2.28 Quad Input Page Program (32h) 52
8.2.29 Quad Input Page Program with 4-Byte Address (34h) 53
8.2.30 Sector Erase (20h) 54
8.2.31 Sector Erase with 4-Byte Address (21h) 55
8.2.32 32KB Block Erase (52h) 56
8.2.33 64KB Block Erase (D8h) 57
8.2.34 64KB Block Erase with 4-Byte Address (DCh) 58
8.2.35 Single Die Chip Erase (C7h / 60h) 59
8.2.36 Erase / Program Suspend (75h) 60
8.2.37 Erase / Program Resume (7Ah) 61

8.2.38 Read Device ID (ABh) 62
8.2.39 Read Manufacturer / Device ID (90h) 63
8.2.40 Read Manufacturer / Device ID Dual I/O (92h) 64
8.2.41 Read Manufacturer / Device ID Quad I/O (94h) 65
8.2.42 Read Unique ID Number (4Bh) 66
8.2.43 Read JEDEC ID (9Fh) 67
8.2.44 Read SFDP Register (5Ah) 68
8.2.45 Erase Security Registers (44h) 69
8.2.46 Program Security Registers (42h) 70
8.2.47 Read Security Registers (48h) 71
8.2.48 Individual Block/Sector Lock (36h) 72
8.2.49 Individual Block/Sector Unlock (39h) 73
8.2.50 Read Block/Sector Lock (3Dh) 74
8.2.51 Global Block/Sector Lock (7Eh) 75
8.2.52 Global Block/Sector Unlock (98h) 75
8.2.53 Enable Reset (66h) and Reset Device (99h) 76
9. ELECTRICAL CHARACTERISTICS 77
9.1 Absolute Maximum Ratings (1) 77
9.2 Operating Ranges 77
9.3 Power-up Power-down Timing and Requirements 78
9.4 DC Electrical Characteristics(1) 79
9.5 AC Measurement Conditions 80
9.6 AC Electrical Characteristics(4,5) 81
9.7 Serial Output Timing 83
9.8 Serial Input Timing 83
10. PACKAGE SPECIFICATIONS 84
10.1 8-Pad WSON 8x6-mm (Package Code E) 84
10.2 16-Pin SOIC 300-mil (Package Code F) 85
10.3 24-Ball TFBGA 8x6-mm (Package Code B, 5x5-1 Ball Array) 86
10.4 24-Ball TFBGA 8x6-mm (Package Code C, 6x4 Ball Array) 87
11. ORDERING INFORMATION 88
11.1 Valid Part Numbers and Top Side Marking 89
12. REVISION HISTORY 90

Table of Figures

Figure 1a. W25M512JV Pad Assignments, 8-pad WSON 8x6-mm (Package Code E) 7
Figure 1b. W25M512JV Pin Assignments, 16-pin SOIC 300-mil (Package Code F) 8
Figure 1c. W25M512JV Ball Assignments, 24-ball TFBGA 8x6-mm (Package Code B & C) 9
Figure 2a. W25M512JV Device Configuration 10
Figure 2b. Single Die W25Q256JV Serial Flash Memory Block Diagram 11
Figure 2c. W25M512JV Serial Flash Memory Operation Diagram 12
Figure 3a. Status Register-1 15
Figure 3b. Status Register-2 17
Figure 3c. Status Register-3 18
Figure 3d. Individual Block/Sector Locks (Single Die W25Q256JV) 21
Figure 3e. Extended Address Register (Single Die W25Q256JV) 22
Figure 4. Software Die Select Instruction 29
Figure 5. Write Enable Instruction 30
Figure 6. Write Enable for Volatile Status Register Instruction 30
Figure 7. Write Disable Instruction 31
Figure 8. Read Status Register Instruction 31
Figure 9a. Write Status Register-1/2/3 Instruction 32
Figure 9b. Write Status Register-1/2 Instruction 33
Figure 10. Read Extended Address Register Instruction 34
Figure 11. Write Extended Address Register Instruction 35
Figure 12. Enter 4-Byte Address Mode instruction 36
Figure 13. Exit 4-Byte Address Mode instruction 36
Figure 14. Read Data Instruction 37
Figure 15. Read Data with 4-Byte Address Instruction 38
Figure 16. Fast Read Instruction 39
Figure 17. Fast Read with 4-Byte Address Instruction 40
Figure 19. Fast Read Dual Output Instruction 41
Figure 20. Fast Read Dual Output with 4-Byte Address Instruction 42
Figure 21. Fast Read Quad Output Instruction 43
Figure 22. Fast Read Quad Output with 4-Byte Address Instruction 44
Figure 23. Fast Read Dual I/O Instruction 45
Figure 24. Fast Read Dual I/O w/ 4-Byte Address Instruction 46
Figure 26. Fast Read Quad I/O Instruction 47
Figure 27. Fast Read Quad I/O w/ 4-Byte Address Instruction 48
Figure 29. Set Burst with Wrap Instruction 49
Figure 30. Page Program Instruction 50
Figure 31. Page Program with 4-Byte Address Instruction 51
Figure 32. Quad Input Page Program Instruction 52
Figure 33. Quad Input Page Program with 4-Byte Address Instruction 53
Figure 34. Sector Erase Instruction 54
Figure 35. Sector Erase with 4-Byte Address Instruction 55
Figure 36. 32KB Block Erase Instruction 56

Figure 37. 64KB Block Erase Instruction 57
Figure 38. 64KB Block Erase with 4-Byte Address Instruction 58
Figure 39. Single Die Chip Erase Instruction 59
Figure 40. Erase/Program Suspend Instruction 60
Figure 41. Erase/Program Resume Instruction 61
Figure 42. Read Device ID Instruction 62
Figure 43. Read Manufacturer / Device ID Instruction 63
Figure 44. Read Manufacturer / Device ID Dual I/O Instruction 64
Figure 45. Read Manufacturer / Device ID Quad I/O Instruction 65
Figure 46. Read Unique ID Number Instruction 66
Figure 47. Read JEDEC ID Instruction 67
Figure 48. Read SFDP Register Instruction 68
Figure 49. Erase Security Registers Instruction 69
Figure 50. Program Security Registers Instruction 70
Figure 51. Read Security Registers Instruction 71
Figure 52. Individual Block/Sector Lock Instruction 72
Figure 53. Individual Block Unlock Instruction 73
Figure 54. Read Block Lock Instruction 74
Figure 55. Global Block Lock Instruction 75
Figure 56. Global Block Unlock Instruction 75
Figure 57. Enable Reset and Reset Instruction Sequence 76
Figure 58a. Power-up Timing and Voltage Levels 78
Figure 58b. Power-up, Power-Down Requirement 78
Figure 59. AC Measurement I/O Waveform 80

1. GENERAL DESCRIPTIONS

The W25M512JV (2 x 256M-bit) Serial MCP (Multi Chip Package) Flash memory is based on the popular W25Q ***SpiFlash***® series by stacking two individual W25Q256JV die into a standard 8-pin package. It offers the highest memory density for the low pin-count package, as well as Concurrent Operations in Serial Flash memory for the first time. The W25M ***SpiStack***® series is ideal for small form factor system designs, and applications that demand high Program/Erase data throughput.

The ***SpiStack***® product series introduces a new "Software Die Select (C2h)" instruction, and a factory assigned "Die ID#" for each stacked die. Each W25Q256JV die can be accessed independently even though the interface is shared. The ***SpiStack***® feature only allows a single die to be Active and have control of the SPI interface at any given time to avoid bus contention.

The W25M512JV maintains all the ***SpiFlash***® features and functions, with the support for standard SPI (Serial Peripheral Interface), Dual I/O SPI, and Quad I/O SPI read operations through the shared SPI interface: Serial Clock, Chip Select, Serial Data I/O_0 (DI), I/O_1 (DO), I/O_2, and I/O_3.

Each W25Q256JV memory array is organized into 131,072 programmable pages of 256-Byte each. Up to 256 bytes can be programmed at a time. Pages can be erased in groups of 16 (4KB sector erase), groups of 128 (32KB block erase), groups of 256 (64KB block erase) or the entire chip (chip erase). The small 4KB sectors allow for greater flexibility in applications that require data and parameter storage.

2. FEATURES

- **New Family of *SpiFlash*® Memories**
  - W25M512JV: 2 x 256M-bit (2 x 32M-Byte)
  - Standard SPI: CLK, /CS, DI, DO
  - Dual SPI: CLK, /CS, IO_0, IO_1
  - Quad SPI: CLK, /CS, IO_0, IO_1, IO_2, IO_3
  - 3 or 4-Byte Addressing Mode
  - Software Die Select (C2h)
  - Software & Hardware Reset(1)
- **High Performance Serial Flash**
  - 104MHz Standard/Dual/Quad SPI clocks
  - 208/416MHz equivalent Dual/Quad SPI
  - 50MB/s continuous data transfer rate
  - Min. 100K Program-Erase cycles per sector
  - More than 20-year data retention
- **Flexible "Concurrent Operations"**
  - Independent single die access
  - Allows "Read while Program/Erase"
  - Allows "Multi Die Program/Erase"
  - Improves Program/Erase throughput
  - Reduces Suspend/Resume activities
- **Low Power, Wide Temperature Range**
  - Single 2.7 to 3.6V power supply
  - 4mA active current, <20µA standby current
  - -40°C to +85°C operating range
- **Flexible Architecture with 4KB sectors**
  - Uniform Sector/Block Erase (4K/32K/64K-Byte)
  - Program 1 to 256 byte per programmable page
  - Program/Erase Suspend & Resume
- **Advanced Security Features**
  - Power Supply Lock-Down and OTP protection
  - Top/Bottom, Complement array protection
  - Individual Block/Sector array protection
  - 64-bit Unique ID for individual die
  - Discoverable Parameters (SFDP) Register
  - 3 x 256-Byte Security Registers with OTP locks
  - Volatile & Non-volatile Status Register Bits
- **Space Efficient Packaging**
  - 8-pad WSON 8x6-mm
  - 16-pin SOIC 300-mil (with /RESET pin)
  - 24-ball TFBGA 8x6-mm (with /RESET pin)
  - Contact Winbond for other options

Note: 1. Hardware /RESET pin is only available on 16-pin SOIC 300-mil and TFBGA packages.

3. PACKAGE TYPES AND PIN CONFIGURATIONS

W25M512JV is offered in an 8-pad WSON 8x6-mm (package code E), a 16-pin SOIC 300-mil (package code F) and two 24-ball 8x6-mm TFBGA (package code B & C) packages as shown in Figure 1a-c respectively. Package diagrams and dimensions are illustrated at the end of this datasheet.

3.1 Pad Configuration WSON 8x6-mm

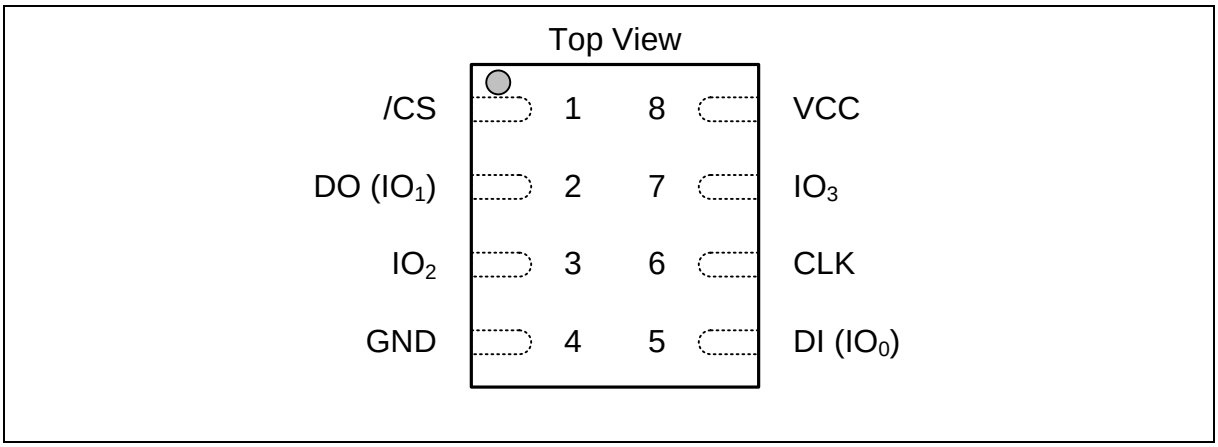

Figure 1a. W25M512JV Pad Assignments, 8-pad WSON 8x6-mm (Package Code E)

3.2 Pad Description WSON 8x6-mm

PAD NO.	PAD NAME	I/O	FUNCTION
1	/CS	I	Chip Select Input
2	DO (IO1)	I/O	Data Output (Data Input Output 1)(1)
3	IO2	I/O	Data Input Output 2(2)
4	GND		Ground
5	DI (IO0)	I/O	Data Input (Data Input Output 0)(1)
6	CLK	I	Serial Clock Input
7	IO3	I/O	Data Input Output 3(2)
8	VCC		Power Supply

Notes:

1. IO0 and IO1 are used for Standard and Dual SPI instructions.
2. IO0 – IO3 are used for Quad SPI instructions.

3.3 Pin Configuration SOIC 300-mil

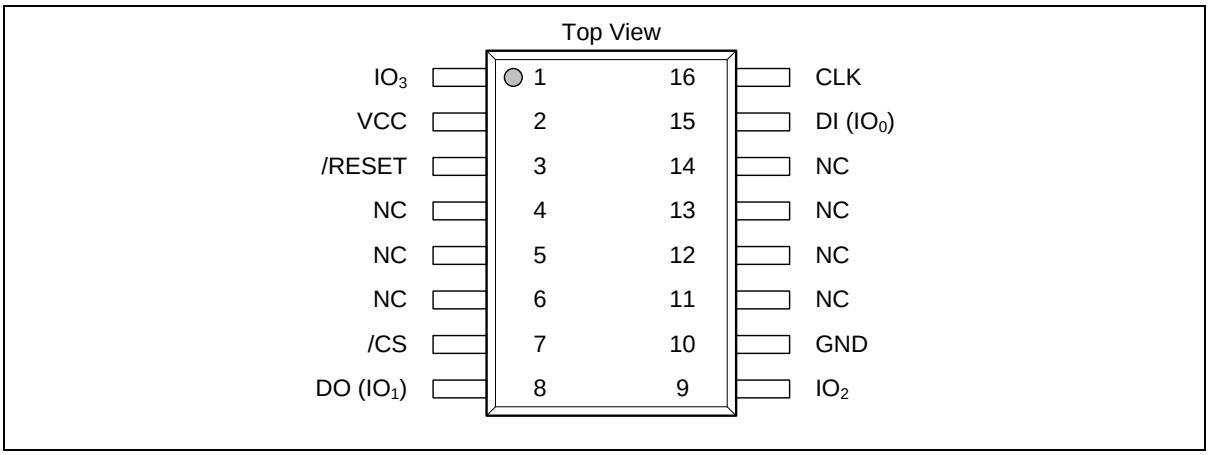

Figure 1b. W25M512JV Pin Assignments, 16-pin SOIC 300-mil (Package Code F)

3.4 Pin Description SOIC 300-mil

PIN NO.	PIN NAME	I/O	FUNCTION
1	IO3	I/O	Data Input Output 3(2)
2	VCC		Power Supply
3	/RESET	I	Reset Input(3)
4	N/C		No Connect
5	N/C		No Connect
6	N/C		No Connect
7	/CS	I	Chip Select Input
8	DO (IO1)	I/O	Data Output (Data Input Output 1)(1)
9	IO2	I/O	Data Input Output 2(2)
10	GND		Ground
11	N/C		No Connect
12	N/C		No Connect
13	N/C		No Connect
14	N/C		No Connect
15	DI (IO0)	I/O	Data Input (Data Input Output 0)(1)
16	CLK	I	Serial Clock Input

Notes:

1. IO0 and IO1 are used for Standard and Dual SPI instructions.
2. IO0 – IO3 are used for Quad SPI instructions.
3. The /RESET pin is a dedicated hardware reset pin regardless of device settings or operation states. If the hardware reset function is not used, this pin can be left floating or connected to VCC in the system.

3.5 Ball Configuration TFBGA 8x6-mm (5x5 or 6x4 Ball Array)

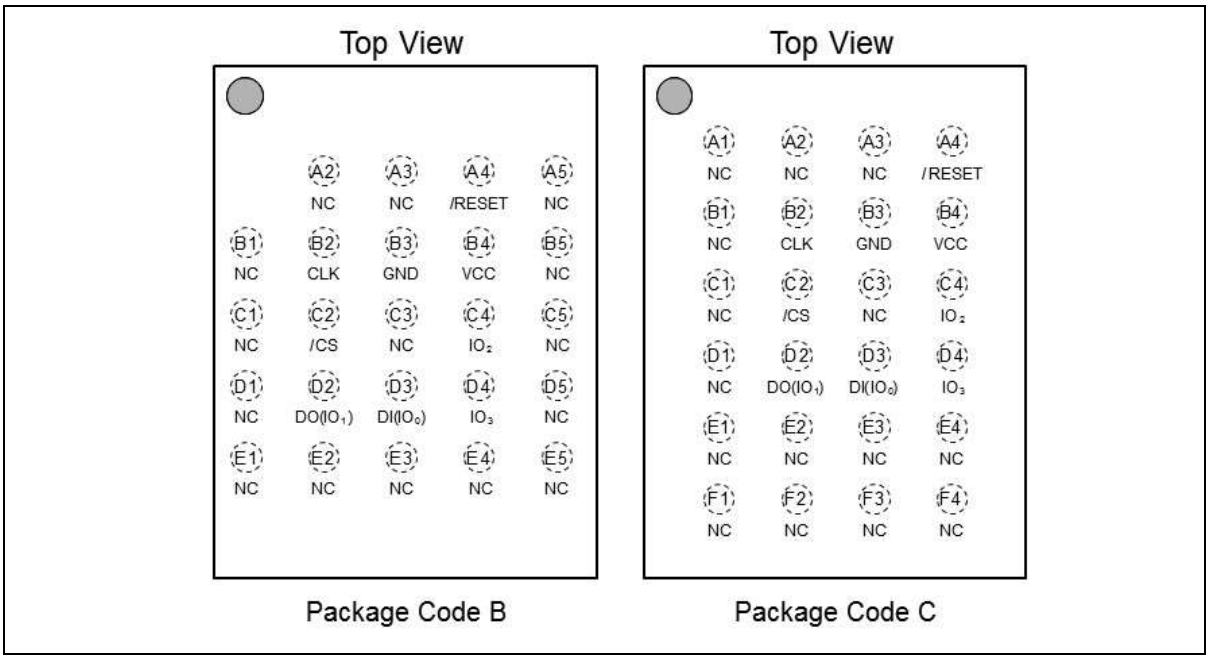

Figure 1c. W25M512JV Ball Assignments, 24-ball TFBGA 8x6-mm (Package Code B & C)

3.6 Ball Description TFBGA 8x6-mm

BALL NO.	PIN NAME	I/O	FUNCTION
A4	/RESET	I	Reset Input(3)
B2	CLK	I	Serial Clock Input
B3	GND		Ground
B4	VCC		Power Supply
C2	/CS	I	Chip Select Input
C4	IO2	I/O	Data Input Output 2(2)
D2	DO (IO1)	I/O	Data Output (Data Input Output 1)(1)
D3	DI (IO0)	I/O	Data Input (Data Input Output 0)(1)
D4	IO3	I/O	Data Input Output 3(2)
Multiple	NC		No Connect

Notes:

1. IO0 and IO1 are used for Standard and Dual SPI instructions.
2. IO0 – IO3 are used for Quad SPI instructions.
3. The /RESET pin is a dedicated hardware reset pin regardless of device settings or operation states. If the hardware reset function is not used, this pin can be left floating or connected to VCC in the system.

4. DEVICE CONFIGURATION & PIN DESCRIPTIONS

4.1 Serial MCP (SpiStack®) Device Configuration

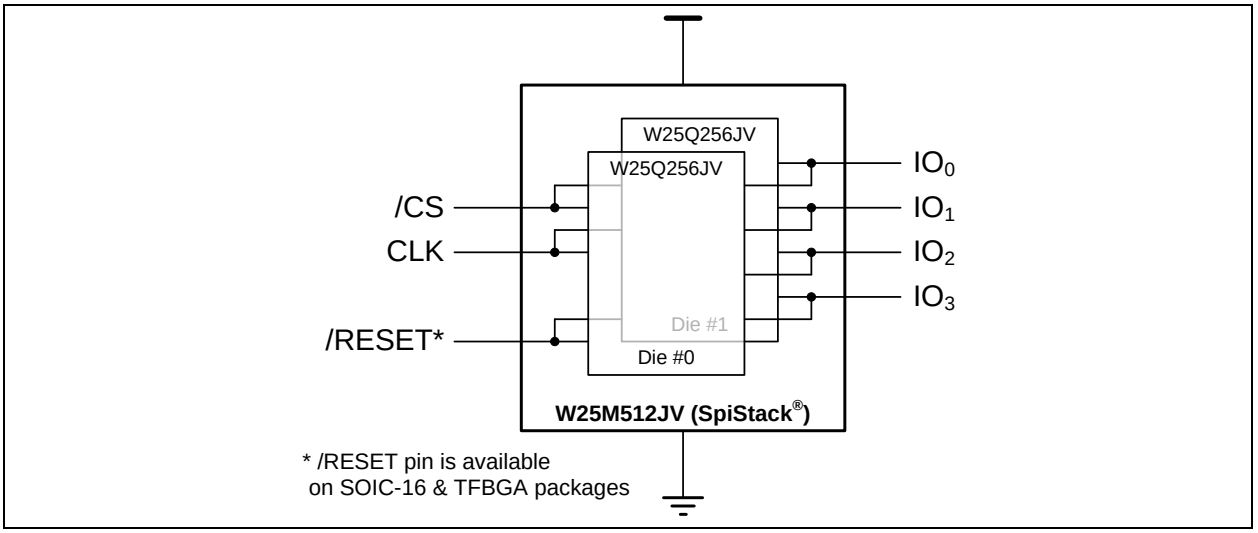

Figure 2a. W25M512JV Device Configuration

All signal pins are shared by the stacked dies within the package. Each die is assigned a "Die ID#" in the factory. Only a single die is active at any given time, and have the control of the SPI bus to communicate with the external SPI controller. However, all the dies will accept two instructions regardless their Active or Idle status: 1) "Software Die Select (C2h)" instruction; it is used to set any single die to be active according to the 8-bit Die ID following the instruction. 2) "Software Reset (66h + 99h)" instruction; it is used to reset all the stacked dies to their power-up state.

4.2 Chip Select (/CS)

The SPI Chip Select (/CS) pin enables and disables device operation. When /CS is high the device is deselected and the Serial Data Output (DO, or IO0, IO1, IO2, IO3) pins are at high impedance. When deselected, the devices power consumption will be at standby levels unless an internal erase, program or write status register cycle is in progress. When /CS is brought low the device will be selected, power consumption will increase to active levels and instructions can be written to and data read from the device. After power-up, /CS must transition from high to low before a new instruction will be accepted. The /CS input must track the VCC supply level at power-up and power-down (see "Write Protection" and Figure 58b). If needed, a pull-up resistor on the /CS pin can be used to accomplish this.

4.3 Serial Input & Output (DI, DO and IO0, IO1, IO2, IO3)

The W25M512JV supports Standard SPI, Dual SPI and Quad SPI operation in each individual stacked die. All 8-bit instructions are shifted into the device through DI (IO0) pin, address and data are shifted in and out of the device through either DI & DO pins for Standard SPI instructions, IO0 & IO1 pins for Dual SPI instructions, or IO0-IO3 pins for Quad SPI instructions.

4.4 Serial Clock (CLK)

The SPI Serial Clock Input (CLK) pin provides the timing for serial input and output operations.

4.5 Reset (/RESET)

A dedicated hardware /RESET pin is available on SOIC-16 and TFBGA packages. When it's driven low for a minimum period of ~1µS, all stacked dies will terminate any external or internal operations and return to their power-on state.

5. SINGLE DIE (W25Q256JV) BLOCK DIAGRAM

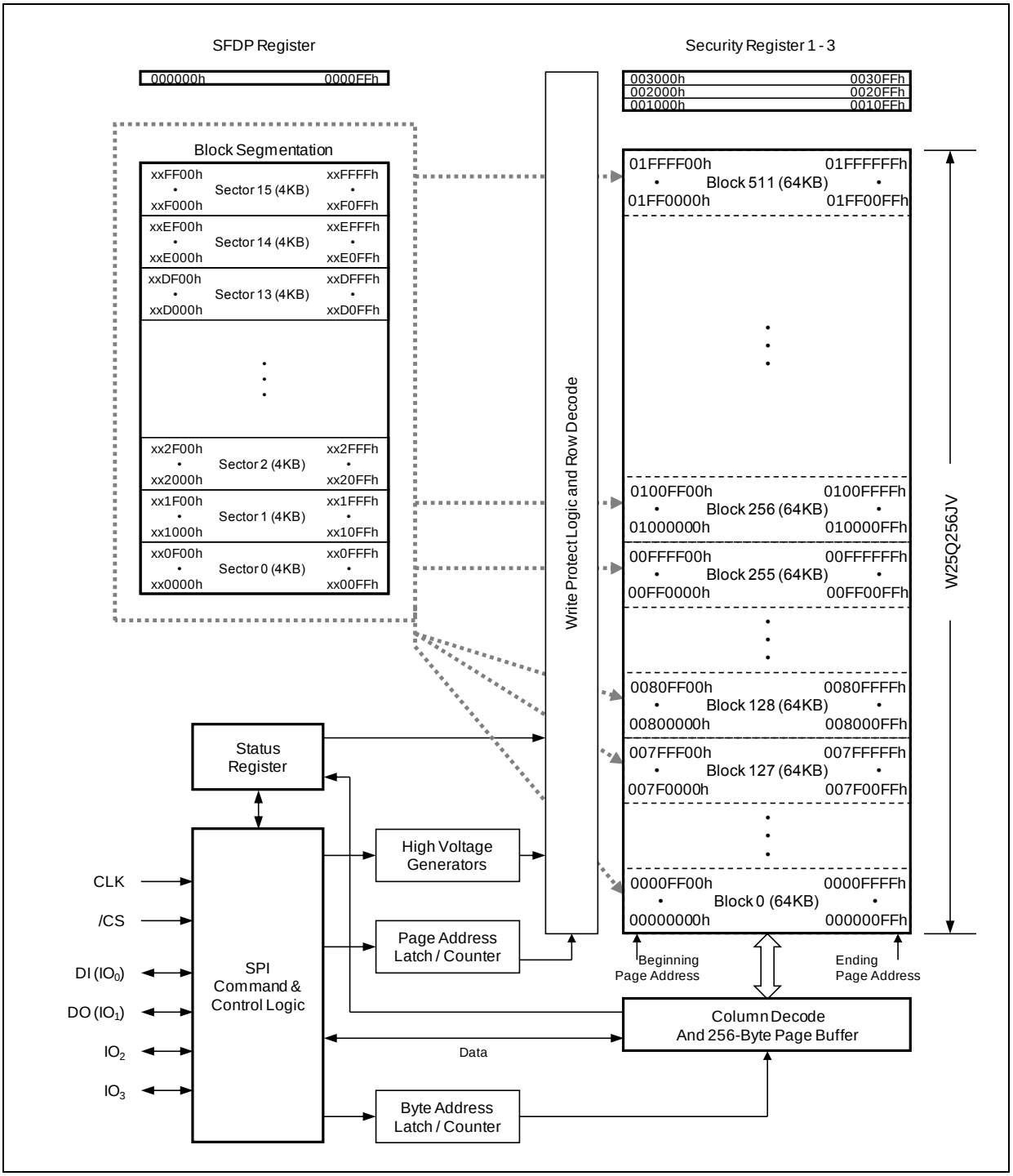

Figure 2b. Single Die W25Q256JV Serial Flash Memory Block Diagram

6. FUNCTIONAL DESCRIPTIONS

6.1 Device Operations

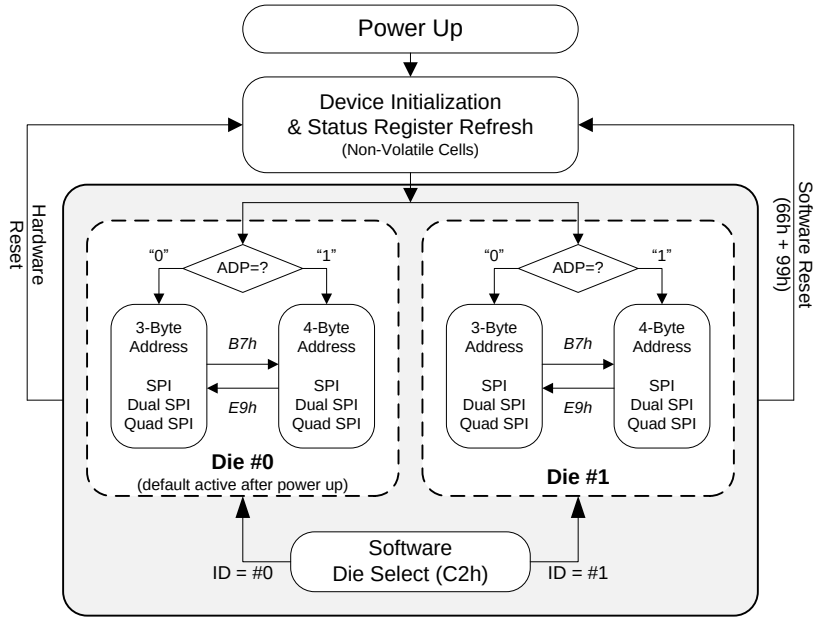

Note: ADP bit in the Status Register is only used to determine 3-Byte or 4-Byte address modes during power up. Changing ADP bit value will not switch the address modes during normal operation.

Figure 2c. W25M512JV Serial Flash Memory Operation Diagram

6.1.1 Stacked Die Operations

Once the device is power on, Die #0 will be active and have control of the SPI bus. "Software Die Select (C2h)" instruction followed by the 8-bit Die ID can be used to select the active die. The active die is available to accept any instruction issued by the controller and perform specific operations. The inactive/idle die does not accept any other instructions except the "Software Die Select (C2h)" and "Software Reset (66h + 99h)". However, the inactive/idle die can still perform internal Program/Erase operation which was initiated when the die was active. Therefore, "Read (on Active die) while Program/Erase (on Idle die)" and "Multi-die Program/Erase (both Active & Idle dies)" concurrent operations are feasible in the ***SpiStack®*** series. "Software Die Select (C2h)" instruction will only change the active/idle status of the stacked dies, and it will not interrupt any on-going Program/Erase operations.

6.1.2 Standard SPI Instructions

The W25M512JV is accessed through an SPI compatible bus consisting of four signals: Serial Clock (CLK), Chip Select (/CS), Serial Data Input (DI) and Serial Data Output (DO). Standard SPI instructions use the DI input pin to serially write instructions, addresses or data to the device on the rising edge of CLK. The DO output pin is used to read data or status from the device on the falling edge of CLK.

SPI bus operation Mode 0 (0,0) and 3 (1,1) are supported. The primary difference between Mode 0 and Mode 3 concerns the normal state of the CLK signal when the SPI bus master is in standby and data is not being transferred to the Serial Flash. For Mode 0, the CLK signal is normally low on the falling and rising edges of /CS. For Mode 3, the CLK signal is normally high on the falling and rising edges of /CS.

6.1.3 Dual & Quad SPI Instructions

The W25M512JV supports Dual SPI operation when using instructions such as “Fast Read Dual Output (3Bh)” and “Fast Read Dual I/O (BBh)”. These instructions allow data to be transferred to or from the device at two to three times the rate of ordinary Serial Flash devices. When using Dual SPI instructions, the DI and DO pins become bidirectional I/O pins: IO0 and IO1. The W25M512JV also supports Quad SPI operation when using instructions such as “Fast Read Quad Output (6Bh)”, and “Fast Read Quad I/O (EBh)”. These instructions allow data to be transferred to or from the device four to six times the rate of ordinary Serial Flash. When using Quad SPI instructions, the DI and DO pins become bidirectional IO0 and IO1, with the additional I/O pins: IO2, IO3.

6.1.4 3-Byte / 4-Byte Address Modes

The W25M512JV provides two Address Modes that can be used to specify any byte of data in the memory array. The 3-Byte Address Mode is backward compatible to older generations of serial flash memory that only support up to 128M-bit data. To address the 256M-bit or more data in 3-Byte Address Mode, Extended Address Register must be used in addition to the 3-Byte addresses.

4-Byte Address Mode is designed to support Serial Flash Memory devices from 256M-bit to 32G-bit. The Extended Address Register is not necessary when the 4-Byte Address Mode is enabled.

Upon power up, the W25M512JV can operate in either 3-Byte Address Mode or 4-Byte Address Mode, depending on the Non-Volatile Status Register Bit ADP (S17) setting. If ADP=0, the device will operate in 3-Byte Address Mode; if ADP=1, the device will operate in 4-Byte Address Mode. The factory default value for ADP is 0. ADP bit cannot be used to switch the address mode during normal operation.

To switch between 3-Byte or 4-Byte Address Modes, “Enter 4-Byte Mode (B7h)” or “Exit 4-Byte Mode (E9h)” instructions must be used. The current address mode is indicated by the Status Register Bit ADS (S16).

W25M512JV also supports a set of basic SPI instructions which requires dedicated 4-Byte address regardless the device Address Mode setting. Please refer to Instruction Set Tables for details.

6.1.5 Software Reset & Hardware /RESET pin

The W25M512JV can be reset to the initial power-on state by a software Reset sequence. This sequence must include two consecutive instructions: Enable Reset (66h) & Reset (99h). If the instruction sequence is successfully accepted, the device will take approximately 30µS (t_{RST}) to reset. No instruction will be accepted during the reset period. For the SOIC-16 and TFBGA packages, W25M512JV provides a dedicated hardware /RESET pin. Drive the /RESET pin low for a minimum period of ~1µS (tRESET*) will interrupt any on-going external/internal operations and reset the device to its initial power-on state. Hardware /RESET pin has higher priority than other SPI input signals (/CS, CLK, IOs).

Notes:

1. While a faster /RESET pulse (as short as a few hundred nanoseconds) will often reset the device, a minimum 1µS pulse is recommended to ensure reliable operation.
2. There is an internal pull-up resistor for the dedicated /RESET pin on the SOIC-16 & TFBGA packages. If the reset function is not used, this pin can be left floating or connected to the VCC in the system.

6.2 Write Protection

Applications that use non-volatile memory must take into consideration the possibility of noise and other adverse system conditions that may compromise data integrity. To address this concern, each stacked die within W25M512JV provides several means to protect the data from inadvertent writes independently.

- Device resets when VCC is below threshold
- Time delay write disable after Power-up
- Write enable/disable instructions and automatic write disable after erase or program
- Software write protection using Status Registers
- Lock Down write protection for Status Register until the next power-up
- Additional Individual Block/Sector Locks for array protection
- One Time Program (OTP) write protection for Array* and Security Registers using Status Register

  * Note: This feature is available upon special order. Please contact Winbond for details.

Upon power-up or at power-down, each stacked die will maintain a reset condition while VCC is below the threshold value of V_{WI}, (See Power-up Timing and Voltage Levels and Figure 58a). While reset, all operations are disabled and no instructions are recognized. During power-up and after the VCC voltage exceeds V_{WI}, all program and erase related instructions are further disabled for a time delay of t_{PUW}. This includes the Write Enable, Page Program, Sector Erase, Block Erase, Chip Erase and the Write Status Register instructions. Note that the chip select pin (/CS) must track the VCC supply level at power-up until the VCC-min level and t_{VSL} time delay is reached, and it must also track the VCC supply level at power-down to prevent adverse instruction sequence. If needed, a pull-up resistor on /CS pin can be used to accomplish this.

After power-up the device is automatically placed in a write-disabled state with the Status Register Write Enable Latch (WEL) set to a 0. A Write Enable instruction must be issued before a Page Program, Sector Erase, Block Erase, Chip Erase or Write Status Register instruction will be accepted. After completing a program, erase or write instruction the Write Enable Latch (WEL) is automatically cleared to a write-disabled state of 0.

Software controlled write protection is facilitated using the Write Status Register instruction and setting the Status Register Lock (SRL) and Block Protect (CMP, TB, BP[3:0]) bits. These settings allow a portion or the entire memory array to be configured as read only. See Status Register section for further information.

Each stacked die also provides another Write Protect method using the Individual Block Locks. Each 64KB block (except the top and bottom blocks, total of 510 blocks) and each 4KB sector within the top/bottom blocks (total of 32 sectors) are equipped with an Individual Block Lock bit. When the lock bit is 0, the corresponding sector or block can be erased or programmed; when the lock bit is set to 1, Erase or Program instructions issued to the corresponding sector or block will be ignored. When the device is powered on, all Individual Block Lock bits will be 1, so the entire memory array is protected from Erase/Program. An “Individual Block Unlock (39h)” instruction must be issued to unlock any specific sector or block.

The WPS bit in Status Register-3 is used to decide which Write Protect scheme should be used. When WPS=0 (factory default), the device will only utilize CMP, TB, BP[3:0] bits to protect specific areas of the array; when WPS=1, the device will utilize the Individual Block Locks for write protection.

7. STATUS AND CONFIGURATION REGISTERS

Three Status and Configuration Registers are provided for each stacked W25Q256JV die. The Read Status Register-1/2/3 instructions can be used to provide status on the availability of the flash memory array, whether the device is write enabled or disabled, the state of write protection, Security Register lock status, Erase/Program Suspend status, output driver strength, power-up and current Address Mode. The Write Status Register instruction can be used to configure the device write protection features, Security Register OTP locks, output driver strength and power-up Address Mode. Write access to the Status Registers is controlled by the state of the volatile/non-volatile Status Register Lock bit (SRL), and the Write Enable instruction.

7.1 Status Registers

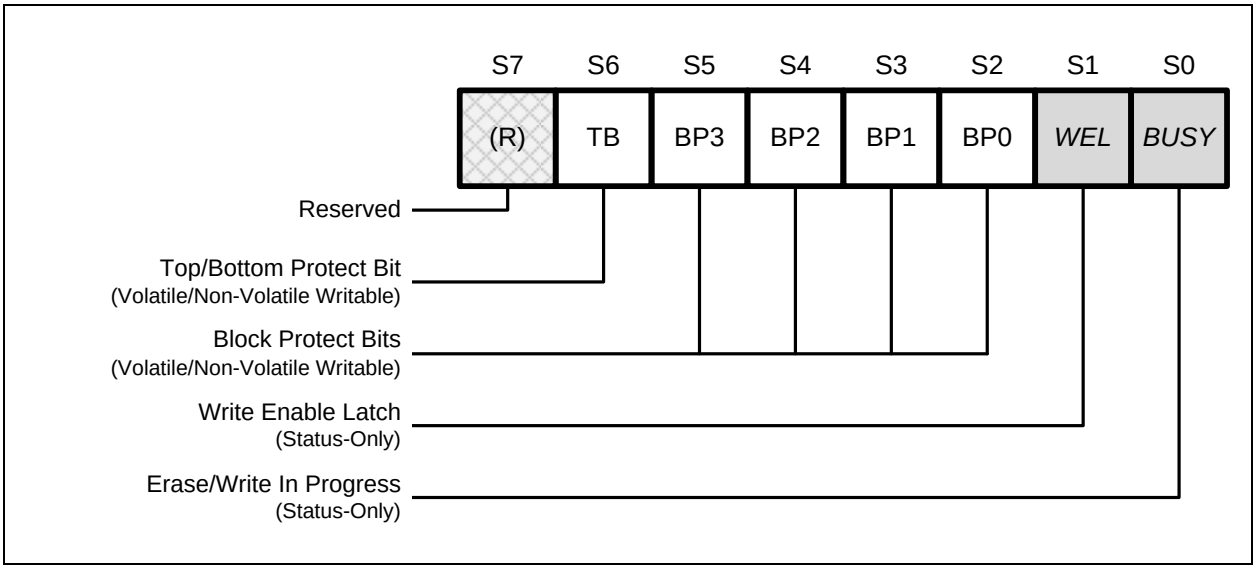

Figure 3a. Status Register-1

7.1.1 Program/Erase/Write In Progress (BUSY) – *Status Only*

BUSY is a read only bit in the status register (S0) that is set to a 1 state when the device is executing a Page Program, Quad Page Program, Sector Erase, Block Erase, Chip Erase, Write Status Register or Erase/Program Security Register instruction. During this time the device will ignore further instructions except for the Read Status Register and Erase/Program Suspend instruction (see t_W, t_{PP}, t_{SE}, t_{BE}, and t_{CE} in AC Characteristics). When the program, erase or write status/security register instruction has completed, the BUSY bit will be cleared to a 0 state indicating the device is ready for further instructions. Read Status Register instruction can always be used to poll the BUSY status during internal operations to determine if the operation has finished.

7.1.2 Write Enable Latch (WEL) – *Status Only*

Write Enable Latch (WEL) is a read only bit in the status register (S1) that is set to 1 after executing a Write Enable Instruction. The WEL status bit is cleared to 0 when the device is write disabled. A write disable state occurs upon power-up or after any of the following instructions: Write Disable, Page Program, Quad Page Program, Sector Erase, Block Erase, Chip Erase, Write Status Register, Erase Security Register and Program Security Register.

7.1.3 Block Protect Bits (BP3, BP2, BP1, BP0) – *Volatile/Non-Volatile Writable*

The Block Protect Bits (BP3, BP2, BP1, BP0) are read/write bits in the status register (S5, S4, S3, and S2) that provide Write Protection control and status to the memory array. Block Protect bits can be set using the Write Status Register Instruction (see tw in AC characteristics). All, none or a portion of the memory array can be protected from Program and Erase instructions (see Status Register Memory Protection table). The factory default setting for the Block Protection Bits is 0, none of the array protected.

7.1.4 Top/Bottom Block Protect (TB) – *Volatile/Non-Volatile Writable*

The Top/Bottom bit (TB) controls if the Block Protect Bits (BP3, BP2, BP1, BP0) protect from the Top (TB=0) or the Bottom (TB=1) of the array as shown in the Status Register Memory Protection table. The factory default setting is TB=0. The TB bit can be set with the Write Status Register Instruction depending on the state of the SRL and WEL bits.

7.1.5 Complement Protect (CMP) – *Volatile/Non-Volatile Writable*

The Complement Protect bit (CMP) is a read/write bit in the status register (S14). It is used in conjunction with TB, BP3, BP2, BP1 and BP0 bits to provide more flexibility for the array protection. Once CMP is set to 1, previous array protection set by TB, BP3, BP2, BP1 and BP0 will be reversed. For instance, when CMP=0, a top 64KB block can be protected while the rest of the array is not; when CMP=1, the top 64KB block will become unprotected while the rest of the array become read-only. Please refer to the Status Register Memory Protection table for details. The default setting is CMP=0.

7.1.6 Status Register Lock (SRL) – *Volatile/Non-Volatile OTP Writable*

The Status Register Lock bit (SRL) is a volatile/non-volatile read/write bit in the status register (S8). The SRL bit controls the method of write protection to the Status Registers: temporary Power Lock-Down or permanently One Time Program OTP.

SRL	Status Register Lock	Description
0	Non-Lock	Status Registers are unlocked.
1	Power Lock-Down (Temporary/Volatile)	Status Registers are locked and cannot be written to until the next power-down, power-up cycle to reset SRL=0.
	One Time Program[1] (Permanently/Non-Volatile)	A special instruction flow can be used to permanently OTP lock the Status Registers.

Note:

1. Please contact Winbond for details regarding the special instruction sequence.

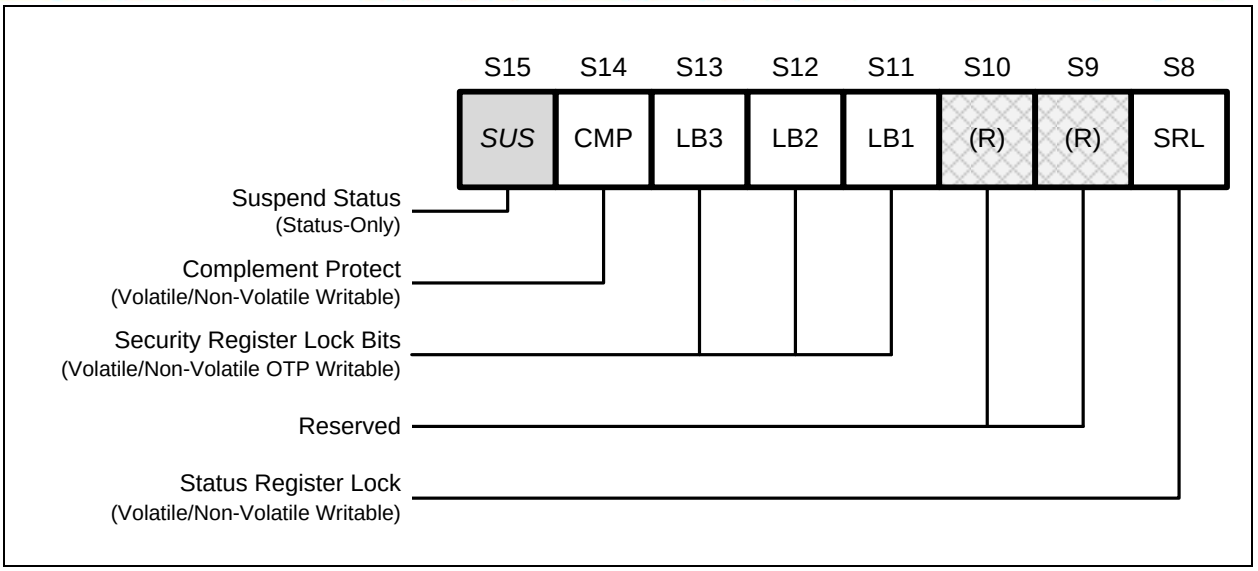

Figure 3b. Status Register-2

7.1.7 Erase/Program Suspend Status (SUS) – *Status Only*

The Suspend Status bit is a read only bit in the status register (S15) that is set to 1 after executing an Erase/Program Suspend (75h) instruction. The SUS status bit is cleared to 0 by Erase/Program Resume (7Ah) instruction as well as a power-down, power-up cycle.

7.1.8 Security Register Lock Bits (LB3, LB2, LB1) – *Volatile/Non-Volatile OTP Writable*

The Security Register Lock Bits (LB3, LB2, LB1) are non-volatile One Time Program (OTP) bits in Status Register (S13, S12, S11) that provide the write protect control and status to the Security Registers. The default state of LB3-1 is 0, Security Registers are unlocked. LB3-1 can be set to 1 individually using the Write Status Register instruction. LB3-1 are One Time Programmable (OTP), once it's set to 1, the corresponding 256-Byte Security Register will become read-only permanently.

7.1.9 Current Address Mode (ADS) – *Status Only*

The Current Address Mode bit is a read only bit in the Status Register-3 that indicates which address mode the device is currently operating in. When ADS=0, the device is in the 3-Byte Address Mode, when ADS=1, the device is in the 4-Byte Address Mode.

7.1.10 Power-Up Address Mode (ADP) – *Non-Volatile Writable*

The ADP bit is a non-volatile bit that determines the initial address mode when the device is powered on or reset. This bit is only used during the power on or device reset initialization period, and it is only writable by the non-volatile Write Status sequence (06h + 11h). When ADP=0 (factory default), the device will power up into 3-Byte Address Mode, the Extended Address Register must be used to access memory regions beyond 128Mb. When ADP=1, the device will power up into 4-Byte Address Mode directly.

7.1.11 Write Protect Selection (WPS) – *Volatile/Non-Volatile Writable*

The WPS bit is used to select which Write Protect scheme should be used. When WPS=0 (factory default), the device will use the combination of CMP, TB, BP[3:0] bits to protect a specific area of the memory array. When WPS=1, the device will utilize the Individual Block Locks to protect any individual sector or blocks. The default value for all Individual Block Lock bits is 1 upon device power on or after reset.

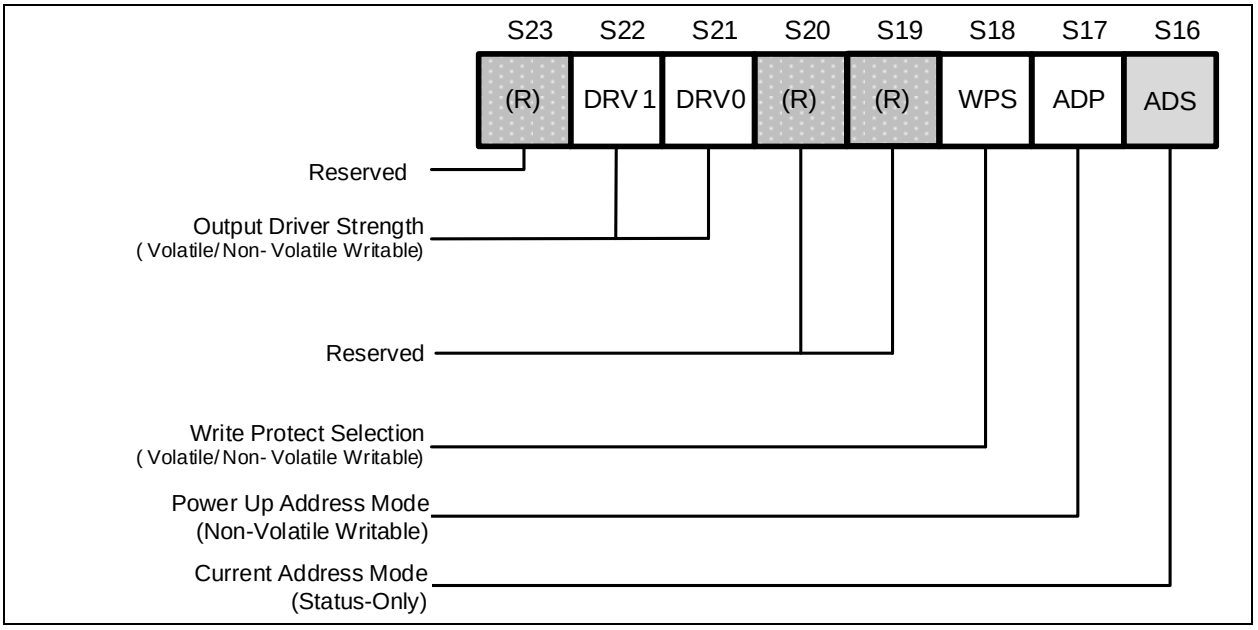

Figure 3c. Status Register-3

7.1.12 Output Driver Strength (DRV1, DRV0) – *Volatile/Non-Volatile Writable*

The DRV1 & DRV0 bits are used to determine the output driver strength for the Read operations.

DRV1, DRV0	Driver Strength
0, 0	100%
0, 1	75%
1, 0	50%
1, 1	25% (default setting)

7.1.13 Reserved Bits – *Non Functional*

There are a few reserved Status Register bits that may be read out as a “0” or “1”. It is recommended to ignore the values of those bits. During a “Write Status Register” instruction, the Reserved Bits can be written as “0” or “1”, but there will not be any effects.

7.1.14 Single Die W25Q256JV Status Register Memory Protection (WPS = 0, CMP = 0)

STATUS REGISTER(1)					W25M512JV (256M-BIT / 32M-BYTE) MEMORY PROTECTION(2)			
TB	BP3	BP2	BP1	BP0	PROTECTED BLOCK(S)	PROTECTED ADDRESSES	PROTECTED DENSITY	PROTECTED PORTION
X	0	0	0	0	NONE	NONE	NONE	NONE
0	0	0	0	1	511	01FF0000h - 01FFFFFFh	64KB	Upper 1/512
0	0	0	1	0	510 thru 511	01FE0000h - 01FFFFFFh	128KB	Upper 1/256
0	0	0	1	1	508 thru 511	01FC0000h - 01FFFFFFh	256KB	Upper 1/128
0	0	1	0	0	504 thru 511	01F80000h - 01FFFFFFh	512KB	Upper 1/64
0	0	1	0	1	496 thru 511	01F00000h - 01FFFFFFh	1MB	Upper 1/32
0	0	1	1	0	480 thru 511	01E00000h - 01FFFFFFh	2MB	Upper 1/16
0	0	1	1	1	448 thru 511	01C00000h - 01FFFFFFh	4MB	Upper 1/8
0	1	0	0	0	384 thru 511	01800000h - 01FFFFFFh	8MB	Upper 1/4
0	1	0	0	1	256 thru 511	01000000h - 01FFFFFFh	16MB	Upper 1/2
1	0	0	0	1	0	00000000h - 0000FFFFh	64KB	Lower 1/512
1	0	0	1	0	0 thru 1	00000000h - 0001FFFFh	128KB	Lower 1/256
1	0	0	1	1	0 thru 3	00000000h - 0003FFFFh	256KB	Lower 1/128
1	0	1	0	0	0 thru 7	00000000h - 0007FFFFh	512KB	Lower 1/64
1	0	1	0	1	0 thru 15	00000000h - 000FFFFFh	1MB	Lower 1/32
1	0	1	1	0	0 thru 31	00000000h - 001FFFFFh	2MB	Lower 1/16
1	0	1	1	1	0 thru 63	00000000h - 003FFFFFh	4MB	Lower 1/8
1	1	0	0	0	0 thru 127	00000000h - 007FFFFFh	8MB	Lower 1/4
1	1	0	0	1	0 thru 255	00000000h - 00FFFFFFh	16MB	Lower 1/2
X	1	1	0	X	0 thru 511	00000000h - 01FFFFFFh	32MB	ALL
X	1	X	1	X	0 thru 511	00000000h - 01FFFFFFh	32MB	ALL

Notes:

1. X = don't care
2. If any Erase or Program instruction specifies a memory region that contains protected data portion, this instruction will be ignored.

7.1.15 Single Die W25Q256JV Status Register Memory Protection (WPS = 0, CMP = 1)

STATUS REGISTER(1)					W25M512JV (256M-BIT / 32M-BYTE) MEMORY PROTECTION(2)			
TB	BP3	BP2	BP1	BP0	PROTECTED BLOCK(S)	PROTECTED ADDRESSES	PROTECTED DENSITY	PROTECTED PORTION
X	0	0	0	0	ALL	00000000h - 01FFFFFFh	ALL	ALL
0	0	0	0	1	0 thru 510	00000000h - 01FEFFFFh	32,704KB	Lower 511/512
0	0	0	1	0	0 thru 509	00000000h - 01FDFFFFh	32,640KB	Lower 255/256
0	0	0	1	1	0 thru 507	00000000h - 01FBFFFFh	32,512KB	Lower 127/128
0	0	1	0	0	0 thru 503	00000000h - 01F7FFFFh	32,256KB	Lower 63/64
0	0	1	0	1	0 thru 495	00000000h - 01EFFFFFh	31MB	Lower 31/32
0	0	1	1	0	0 thru 479	00000000h - 01DFFFFFh	30MB	Lower 15/16
0	0	1	1	1	0 thru 447	00000000h - 01BFFFFFh	28MB	Lower 7/8
0	1	0	0	0	0 thru 383	00000000h - 017FFFFFh	24MB	Lower 3/4
0	1	0	0	1	0 thru 255	00000000h - 00FFFFFFh	16MB	Lower 1/2
1	0	0	0	1	1 thru 511	00010000h - 01FFFFFFh	32,704KB	Upper 511/512
1	0	0	1	0	2 thru 511	00020000h - 01FFFFFFh	32,640KB	Upper 255/256
1	0	0	1	1	4 thru 511	00040000h - 01FFFFFFh	32,512KB	Upper 127/128
1	0	1	0	0	8 thru 511	00080000h - 01FFFFFFh	32,256KB	Upper 63/64
1	0	1	0	1	16 thru 511	00100000h - 01FFFFFFh	31MB	Upper 31/32
1	0	1	1	0	32 thru 511	00200000h - 01FFFFFFh	30MB	Upper 15/16
1	0	1	1	1	64 thru 511	00400000h - 01FFFFFFh	28MB	Upper 7/8
1	1	0	0	0	128 thru 511	00800000h - 01FFFFFFh	24MB	Upper 3/4
1	1	0	0	1	256 thru 511	01000000h - 01FFFFFFh	16MB	Upper 1/2
X	1	1	0	X	NONE	NONE	NONE	NONE
X	1	X	1	X	NONE	NONE	NONE	NONE

Notes:

1. X = don't care
2. If any Erase or Program instruction specifies a memory region that contains protected data portion, this instruction will be ignored.

7.1.16 Single Die W25Q256JV Individual Block Memory Protection (WPS=1)

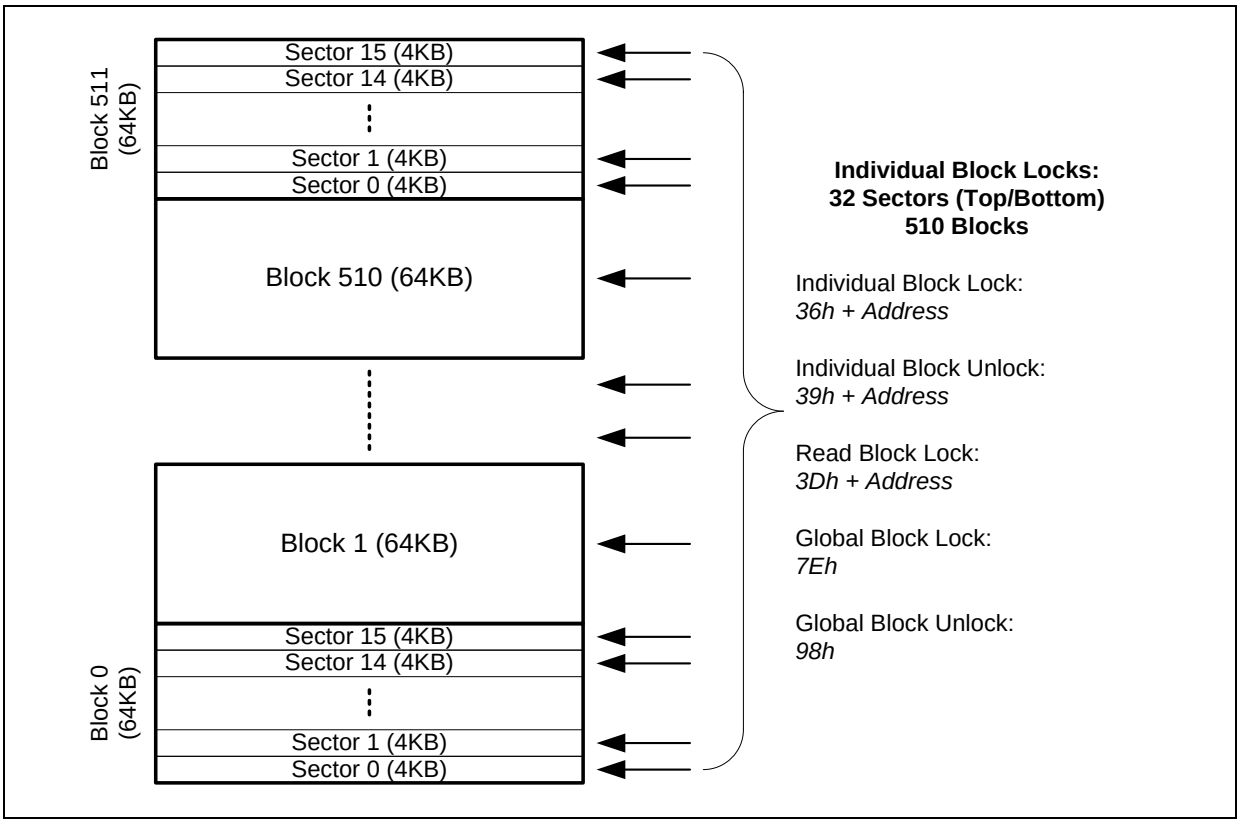

Figure 3d. Individual Block/Sector Locks (Single Die W25Q256JV)

Notes:

1. Individual Block/Sector protection is only valid when WPS=1.
2. All individual block/sector lock bits are set to 1 by default after power up, all memory array is protected.

7.2 Extended Address Register – *Volatile Writable Only*

In addition to the Status Registers, each W25Q256JV device provides a volatile Extended Address Register which consists of the 4th byte of memory address. The Extended Address Register is used only when the device is operating in the 3-Byte Address Mode (ADS=0). The lower 128Mb memory array (00000000h – 00FFFFFFh) is selected when A24=0, all instructions with 3-Byte addresses will be executed within that region. When A24=1, the upper 128Mb memory array (01000000h – 01FFFFFFh) will be selected.

If the device powers up with ADP bit set to 1, or an "Enter 4-Byte Address Mode (B7h)" instruction is issued, the device will require 4-Byte address input for all address related instructions, and the Extended Address Register setting will be ignored. However, any instruction with 4-byte address input will replace the Extended Address Register Bits (A31-A24) with new settings.

Upon power up or after the execution of a Software/Hardware Reset, the Extended Address Register values will be cleared to 0.

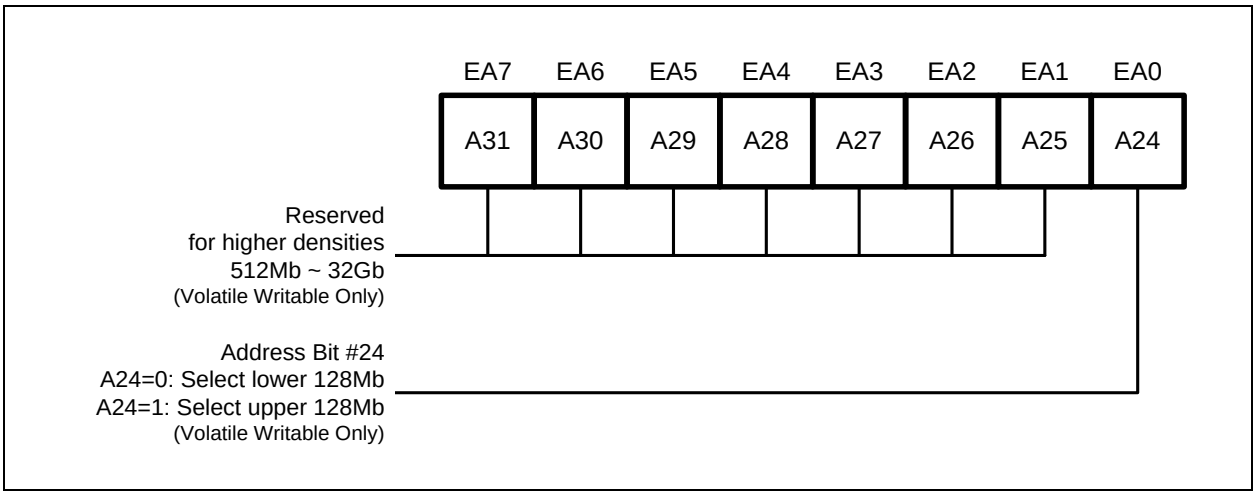

Figure 3e. Extended Address Register (Single Die W25Q256JV)

8. INSTRUCTIONS

The Standard/Dual/Quad SPI instruction set of each individual stacked die in W25M512JV consists of 59 basic instructions that are fully controlled through the SPI bus. Instructions are initiated with the falling edge of Chip Select (/CS). The first byte of data clocked into the DI input provides the instruction code. Data on the DI input is sampled on the rising edge of clock with most significant bit (MSB) first.

SPI I/O Protocols	3-Byte Address Mode (ADS=0)	4-Byte Address Mode (ADS=1)
Standard/Dual/Quad SPI	Instruction Set Table 1 & 2	Instruction Set Table 3 & 4

Instructions vary in length from a single byte to several bytes and may be followed by address bytes, data bytes, dummy bytes (don't care), and in some cases, a combination. In the following instruction tables, depending on the number I/O pins for either command, address or data Input/Output, instructions are grouped by the (x-x-x) SPI protocol notation.

SPI I/O Protocols	Command Byte Input	Address Byte Input	Data Byte Input/Output
(1-1-1)	X1 (DI) / 8 clocks	X1 (DI) / 8 clocks	X1 (DI or DO) / 8 clocks
(1-1-2)	X1 (DI) / 8 clocks	X1 (DI) / 8 clocks	X2 (DI, DO) / 4 clocks
(1-1-4)	X1 (DI) / 8 clocks	X1 (DI) / 8 clocks	X4 (IO 0~3) / 2 clocks
(1-2-2)	X1 (DI) / 8 clocks	X2 (DI, DO) / 4 clocks	X2 (DI, DO) / 4 clocks
(1-4-4)	X1 (DI) / 8 clocks	X4 (IO 0~3) / 2 clocks	X4 (IO 0~3) / 2 clocks

Instructions are completed with the rising edge of edge /CS. Clock relative timing diagrams for each instruction are included in Figures 4 through 57. All read instructions can be completed after any clocked bit. However, all instructions that Write, Program or Erase must complete on a byte boundary (/CS driven high after a full 8-bits have been clocked), otherwise the instruction will be ignored. This feature further protects the device from inadvertent writes.

Additionally, while the memory is being programmed or erased, or when the Status Register is being written, all instructions except for Read Status Register will be ignored until the program or erase cycle has completed. "Software Die Select" and "Software Reset" will always be accepted to switch the Active/Idle status of any stacked die, regardless the operating status of the die.

8.1 Device ID and Instruction Set Tables

8.1.1 Manufacturer and Device Identification

MANUFACTURER ID	**(MF7 - MF0)**	
Winbond Serial Flash	*EFh*	
Device ID	**(ID7 - ID0)**	**(ID15 - ID0)**
Instruction	**ABh, 90h, 92h, 94h**	**9Fh**
Single Die W25Q256JV 2x stacked	*18h*	*7119h*

8.1.2 Instruction Set Table 1 (Standard Single SPI, 3-Byte Address Mode ADS=0)(1)

Data Input Output	Byte 1	Byte 2	Byte 3	Byte 4	Byte 5	Byte 6	Byte 7
I/O Protocol (1 – 1 – 1)							
Software Die Select	**C2h**	Die ID#					
Write Enable	**06h**						
Volatile Status Register Write Enable	**50h**						
Write Disable	**04h**						
Read Device ID	**ABh**	Dummy	Dummy	Dummy	***ID7-ID0(2)***		
Read Manufacturer/Device ID	**90h**	Dummy	Dummy	00h	***MF7-MF0***	***ID7-ID0***	
Read JEDEC ID	**9Fh**	***MF7-MF0***	***ID15-ID8***	***ID7-ID0***			
Read Unique ID	**4Bh**	Dummy	Dummy	Dummy	Dummy	***UID63-0***	
Read Data	**03h**	A23-A16	A15-A8	A7-A0	***D7-D0***		
Read Data with 4-Byte Address	**13h**	A31-A24	A23-A16	A15-A8	A7-A0	***D7-D0***	
Fast Read	**0Bh**	A23-A16	A15-A8	A7-A0	Dummy	***D7-D0***	
Fast Read with 4-Byte Address	**0Ch**	A31-A24	A23-A16	A15-A8	A7-A0	Dummy	***D7-D0***
Page Program	**02h**	A23-A16	A15-A8	A7-A0	D7-D0	D7-D0(3)	
Page Program with 4-Byte Address	**12h**	A31-A24	A23-A16	A15-A8	A7-A0	D7-D0	D7-D0(3)
4KB Sector Erase	**20h**	A23-A16	A15-A8	A7-A0			
4KB Sector Erase with 4-Byte Address	**21h**	A31-A24	A23-A16	A15-A8	A7-A0		
32KB Block Erase	**52h**	A23-A16	A15-A8	A7-A0			
64KB Block Erase	**D8h**	A23-A16	A15-A8	A7-A0			
64KB Block Erase with 4-Byte Address	**DCh**	A31-A24	A23-A16	A15-A8	A7-A0		
Chip Erase	**C7h/60h**						
Read Status Register-1	**05h**	***S7-S0(2)***					
Write Status Register-1(4)	**01h**	S7-S0(4)					
Read Status Register-2	**35h**	***S15-S8(2)***					
Write Status Register-2	**31h**	S15-S8					
Read Status Register-3	**15h**	***S23-S16(2)***					
Write Status Register-3	**11h**	S23-S16					
Read Extended Address Register	**C8h**	***EA7-EA0(2)***					
Write Extended Address Register	**C5h**	EA7-EA0					
Read SFDP Register	**5Ah**	A23-A16	A15-A8	A7-A0	Dummy	***D7-D0***	
Erase Security Register(5)	**44h**	A23-A16	A15-A8	A7-A0			
Program Security Register(5)	**42h**	A23-A16	A15-A8	A7-A0	D7-D0	D7-D0(3)	
Read Security Register(5)	**48h**	A23-A16	A15-A8	A7-A0	Dummy	***D7-D0***	
Global Block Lock	**7Eh**						
Global Block Unlock	**98h**						
Read Block Lock	**3Dh**	A23-A16	A15-A8	A7-A0	***L7-L0***		
Individual Block Lock	**36h**	A23-A16	A15-A8	A7-A0			
Individual Block Unlock	**39h**	A23-A16	A15-A8	A7-A0			
Erase / Program Suspend	**75h**						
Erase / Program Resume	**7Ah**						
Enter 4-Byte Address Mode	**B7h**						
Exit 4-Byte Address Mode	**E9h**						
Enable Reset	**66h**						
Reset Device	**99h**						

8.1.3 Instruction Set Table 2 (Dual/Quad SPI Instructions, 3-Byte Address Mode ADS=0)

Data Input Output	Byte 1	Byte 2	Byte 3	Byte 4	Byte 5	Byte 6	Byte 7	Byte 8	Byte 9
I/O Protocol (1 – 1 – 2)(7)									
Fast Read Dual Output	**3Bh**	A23-A16	A15-A8	A7-A0	Dummy	***D7-D0 /2***			
Fast Read Dual Output with 4-Byte Address	**3Ch**	A31-A24	A23-A16	A15-A8	A7-A0	Dummy	***D7-D0 /2***		
I/O Protocol (1 – 2 – 2)(6,7)									
Mftr./Device ID Dual I/O	**92h**	A23-A16 /2	A15-A8 /2	00 /2	Dummy /2	***MF7-MF0 /2***	***ID7-ID0 /2***	***MF7-MF0 /2***	***ID7-ID0 /2***
Fast Read Dual I/O	**BBh**	A23-A16 /2	A15-A8 /2	A7-A0 /2	Dummy /2	***D7-D0 /2***			
Fast Read Dual I/O with 4-Byte Address	**BCh**	A31-A24 /2	A23-A16 /2	A15-A8 /2	A7-A0 /2	Dummy /2	***D7-D0 /2***		
I/O Protocol (1 – 1 – 4)(9)									
Quad Input Page Program(3)	**32h**	A23-A16	A15-A8	A7-A0	D7-D0 /4				
Quad Page Program with 4-Byte Address(3)	**34h**	A31-A24	A23-A16	A15-A8	A7-A0	D7-D0 /4			
Fast Read Quad Output	**6Bh**	A23-A16	A15-A8	A7-A0	Dummy	***D7-D0 /4***			
Fast Read Quad Output with 4-Byte Address	**6Ch**	A31-A24	A23-A16	A15-A8	A7-A0	Dummy	***D7-D0 /4***		
I/O Protocol (1 – 4 – 4)(8,9)									
Mftr./Device ID Quad I/O	**94h**	A23-A16 /4	A15-A8 /4	00h /4	Dummy /4	Dummy /4	Dummy /4	***MF7-MF0 /4***	***ID7-ID0 /4***
Fast Read Quad I/O	**EBh**	A23-A16 /4	A15-A8 /4	A7-A0 /4	Dummy /4	Dummy /4	Dummy /4	***D7-D0 /4***	
Fast Read Quad I/O with 4-Byte Address	**ECh**	A31-A24 /4	A23-A16 /4	A15-A8 /4	A7-A0 /4	Dummy /4	Dummy /4	Dummy /4	***D7-D0 /4***
Set Burst with Wrap	**77h**	Dummy /4	Dummy /4	Dummy /4	W7-W0 /4				

8.1.4 Instruction Set Table 3 (Standard Single SPI, 4-Byte Address Mode ADS=1)(1)

Data Input Output	Byte 1	Byte 2	Byte 3	Byte 4	Byte 5	Byte 6	Byte 7
I/O Protocol (1 – 1 – 1)							
Software Die Select	**C2h**	Die ID#					
Write Enable	**06h**						
Volatile Status Register Write Enable	**50h**						
Write Disable	**04h**						
Read Device ID	**ABh**	Dummy	Dummy	Dummy	***ID7-ID0***(2)		
Read Manufacturer/Device ID	**90h**	Dummy	Dummy	00h	***MF7-MF0***	***ID7-ID0***	
Read JEDEC ID	**9Fh**	***MF7-MF0***	***ID15-ID8***	***ID7-ID0***			
Read Unique ID	**4Bh**	Dummy	Dummy	Dummy	Dummy	Dummy	***UID63-0***
Read Data	**03h**	**A31-A24**	A23-A16	A15-A8	A7-A0	*D7-D0*	
Read Data with 4-Byte Address	**13h**	A31-A24	A23-A16	A15-A8	A7-A0	***D7-D0***	
Fast Read	**0Bh**	A31-A24	A23-A16	A15-A8	A7-A0	Dummy	***D7-D0***
Fast Read with 4-Byte Address	**0Ch**	A31-A24	A23-A16	A15-A8	A7-A0	Dummy	***D7-D0***
Page Program	**02h**	A31-A24	A23-A16	A15-A8	A7-A0	D7-D0	D7-D0(3)
Page Program with 4-Byte Address	**12h**	A31-A24	A23-A16	A15-A8	A7-A0	D7-D0	D7-D0(3)
4KB Sector Erase	**20h**	A31-A24	A23-A16	A15-A8	A7-A0		
4KB Sector Erase with 4-Byte Address	**21h**	A31-A24	A23-A16	A15-A8	A7-A0		
32KB Block Erase	**52h**	A31-A24	A23-A16	A15-A8	A7-A0		
64KB Block Erase	**D8h**	A31-A24	A23-A16	A15-A8	A7-A0		
64KB Block Erase with 4-Byte Address	**DCh**	A31-A24	A23-A16	A15-A8	A7-A0		
Chip Erase	**C7h/60h**						
Read Status Register-1	**05h**	***S7-S0***(2)					
Write Status Register-1(4)	**01h**	S7-S0(4)					
Read Status Register-2	**35h**	***S15-S8***(2)					
Write Status Register-2	**31h**	S15-S8					
Read Status Register-3	**15h**	***S23-S16***(2)					
Write Status Register-3	**11h**	S23-S16					
Read Extended Address Register	**C8h**	***EA7-EA0***(2)					
Write Extended Address Register	**C5h**	EA7-EA0					
Read SFDP Register	**5Ah**	A23-A16	A15-A8	A7-A0	Dummy	***D7-D0***	
Erase Security Register(5)	**44h**	A31-A24	A23-A16	A15-A8	A7-A0		
Program Security Register(5)	**42h**	A31-A24	A23-A16	A15-A8	A7-A0	D7-D0	D7-D0(3)
Read Security Register(5)	**48h**	A31-A24	A23-A16	A15-A8	A7-A0	Dummy	***D7-D0***
Global Block Lock	**7Eh**						
Global Block Unlock	**98h**						
Read Block Lock	**3Dh**	A31-A24	A23-A16	A15-A8	A7-A0	***L7-L0***	
Individual Block Lock	**36h**	A31-A24	A23-A16	A15-A8	A7-A0		
Individual Block Unlock	**39h**	A31-A24	A23-A16	A15-A8	A7-A0		
Erase / Program Suspend	**75h**						
Erase / Program Resume	**7Ah**						
Enter 4-Byte Address Mode	**B7h**						
Exit 4-Byte Address Mode	**E9h**						
Enable Reset	**66h**						
Reset Device	**99h**						

8.1.5 Instruction Set Table 4 (Dual/Quad SPI Instructions, 4-Byte Address Mode ADS=1)

Data Input Output	Byte 1	Byte 2	Byte 3	Byte 4	Byte 5	Byte 6	Byte 7	Byte 8	Byte 9
I/O Protocol (1 – 1 – 2)(7)									
Fast Read Dual Output	**3Bh**	A31-A24	A23-A16	A15-A8	A7-A0	Dummy	***D7-D0 /2***		
Fast Read Dual Output with 4-Byte Address	**3Ch**	A31-A24	A23-A16	A15-A8	A7-A0	Dummy	***D7-D0 /2***		
I/O Protocol (1 – 2 – 2)(6,7)									
Mftr./Device ID Dual I/O	**92h**	A31-A24 /2	A23-A16 /2	A15-A8 /2	00 /2	Dummy /2	***MF7-MF0 /2***	***ID7-ID0 /2***	***MF7-MF0 /2***
Fast Read Dual I/O	**BBh**	A31-A24 /2	A23-A16 /2	A15-A8 /2	A7-A0 /2	Dummy /2	***D7-D0 /2***		
Fast Read Dual I/O with 4-Byte Address	**BCh**	A31-A24 /2	A23-A16 /2	A15-A8 /2	A7-A0 /2	Dummy /2	***D7-D0 /2***		
I/O Protocol (1 – 1 – 4)(9)									
Quad Input Page Program(3)	**32h**	A31-A24	A23-A16	A15-A8	A7-A0	D7-D0 /4			
Quad Page Program with 4-Byte Address(3)	**34h**	A31-A24	A23-A16	A15-A8	A7-A0	D7-D0 /4			
Fast Read Quad Output	**6Bh**	A31-A24	A23-A16	A15-A8	A7-A0	Dummy	***D7-D0 /4***		
Fast Read Quad Output with 4-Byte Address	**6Ch**	A31-A24	A23-A16	A15-A8	A7-A0	Dummy	***D7-D0 /4***		
I/O Protocol (1 – 4 – 4)(8,9)									
Mftr./Device ID Quad I/O	**94h**	A31-A24 /4	A23-A16 /4	A15-A8 /4	00h /4	Dummy /4	Dummy /4	Dummy /4	***MF7-MF0 /4***
Fast Read Quad I/O	**EBh**	A31-A24 /4	A23-A16 /4	A15-A8 /4	A7-A0 /4	Dummy /4	Dummy /4	Dummy /4	***D7-D0 /4***
Fast Read Quad I/O with 4-Byte Address	**ECh**	A31-A24 /4	A23-A16 /4	A15-A8 /4	A7-A0 /4	Dummy /4	Dummy /4	Dummy /4	***D7-D0 /4***
Set Burst with Wrap	**77h**	Dummy /4	Dummy /4	Dummy /4	Dummy /4	W7-W0 /4			

Notes:

1. Data bytes are shifted with Most Significant Bit first. Byte fields with bold and italic style ***D7-D0*** indicate data output from the device. “D7-D0” indicates single I/O pin; “D7-D0 /2” indicates 2 I/O pins; “D7-D0 /4” indicates 4 I/O pins.
2. The Status Register contents and Device ID will repeat continuously until /CS terminates the instruction.
3. At least one byte of data input is required for Page Program, Quad Page Program and Program Security Registers, up to 256 bytes of data input. If more than 256 bytes of data are sent to the device, the addressing will wrap to the beginning of the page and overwrite previously sent data.
4. Write Status Register-1 (01h) can also be used to program Status Register-1&2, see section 8.2.6.
5. Security Register Address:
   Security Register 1: A23-16 = 00h; A15-8 = 10h; A7-0 = byte address
   Security Register 2: A23-16 = 00h; A15-8 = 20h; A7-0 = byte address
   Security Register 3: A23-16 = 00h; A15-8 = 30h; A7-0 = byte address
6. Dual SPI address input format:
   IO0 = A22, A20, A18, A16, A14, A12, A10, A8, A6, A4, A2, A0
   IO1 = A23, A21, A19, A17, A15, A13, A11, A9, A7, A5, A3, A1
7. Dual SPI data input/output format:
   IO0 = D6, D4, D2, D0, …..
   IO1 = D7, D5, D3, D1, …..
8. Quad SPI address input format:
   IO0 = A20, A16, A12, A8, A4, A0
   IO1 = A21, A17, A13, A9, A5, A1
   IO2 = A22, A18, A14, A10, A6, A2
   IO3 = A23, A19, A15, A11, A7, A3

   Set Burst with Wrap input format:
   IO0 = x, x, x, x, x, x, W4, x
   IO1 = x, x, x, x, x, x, W5, x
   IO2 = x, x, x, x, x, x, W6, x
   IO3 = x, x, x, x, x, x, x, x
9. Quad SPI data input/output format:
   IO0 = D4, D0, …..
   IO1 = D5, D1, …..
   IO2 = D6, D2, …..
   IO3 = D7, D3, …..

8.2 Instruction Descriptions

8.2.1 Software Die Select (C2h)

Each stacked die has a pre-assigned “Die ID#” by the factory, in the sequence of 0x00, 0x01, etc. At any given time, there can only be one Active Die within the W25M package, to communicate with the external SPI controller. After power-up, Die #0 is always the Active Die. Software Die Select (C2h) instruction is used to select a specific die to be active, according to the 8-bit Die ID following the C2h instruction as illustrated in Figure 4.

“Concurrent Operations” can be realized by assigning the current Active Die to perform an Erase/Program operation which requires some amount of time to finish. While the internal Program/Erase operation is on-going, the controller can issue a “Software Die Select (C2h)” instruction to select another die to be active. Depending on the system requirement, a Read, Program or Erase operation can be performed on the newly selected Active Die. “Read while Program/Erase” or “Multi-Die Program/Erase” can be performed in such fashion, to improve system Program/Erase throughput and to avoid constant Program/Erase Suspend and Resume activities in certain applications.

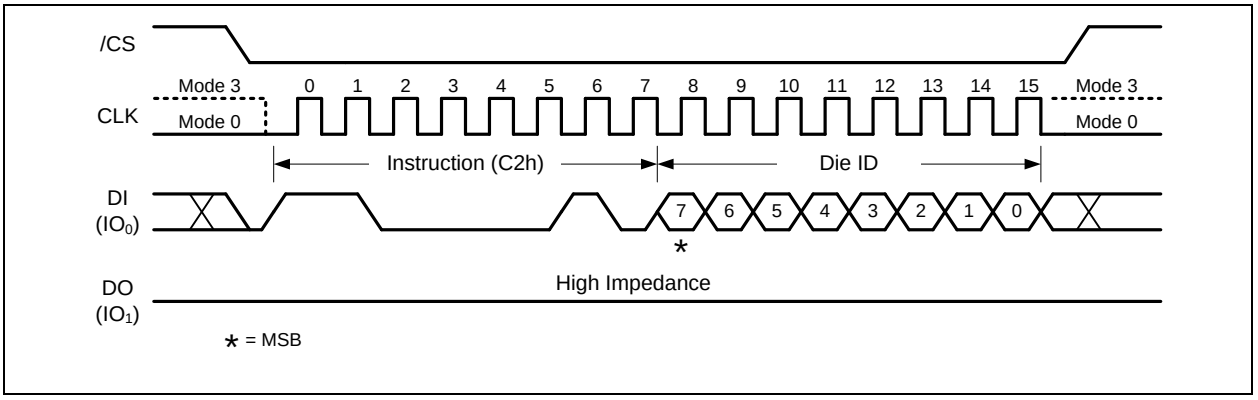

Figure 4. Software Die Select Instruction

8.2.2 Write Enable (06h)

The Write Enable instruction (Figure 5) sets the Write Enable Latch (WEL) bit in the Status Register to a 1. The WEL bit must be set prior to every Page Program, Quad Page Program, Sector Erase, Block Erase, Chip Erase, Write Status Register and Erase/Program Security Registers instruction. The Write Enable instruction is entered by driving /CS low, shifting the instruction code “06h” into the Data Input (DI) pin on the rising edge of CLK, and then driving /CS high.

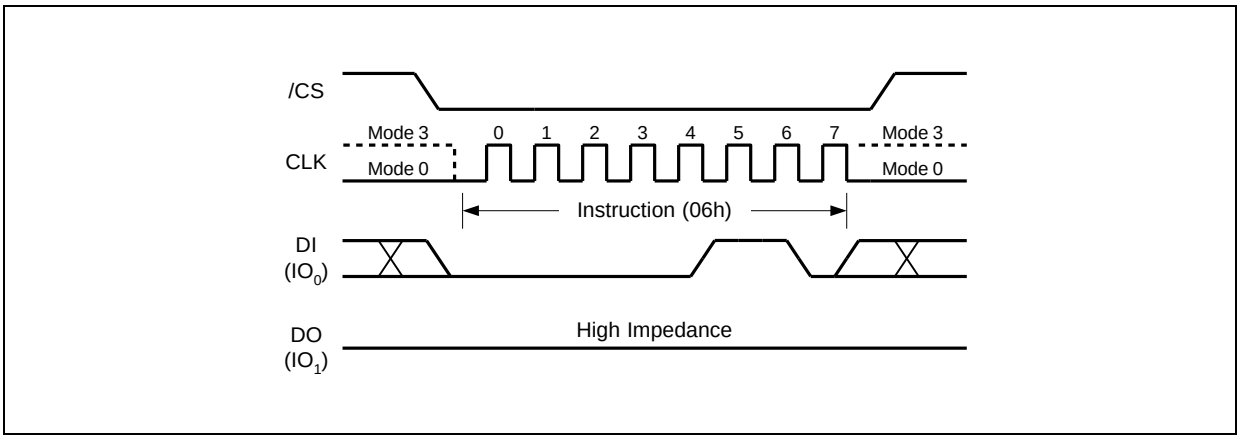

Figure 5. Write Enable Instruction

8.2.3 Write Enable for Volatile Status Register (50h)

The non-volatile Status Register bits described in section 7.1 can also be written to as volatile bits. This gives more flexibility to change the system configuration and memory protection schemes quickly without waiting for the typical non-volatile bit write cycles or affecting the endurance of the Status Register non-volatile bits. To write the volatile values into the Status Register bits, the Write Enable for Volatile Status Register (50h) instruction must be issued prior to a Write Status Register (01h) instruction. Write Enable for Volatile Status Register instruction (Figure 6) will not set the Write Enable Latch (WEL) bit, it is only valid for the Write Status Register instruction to change the volatile Status Register bit values.

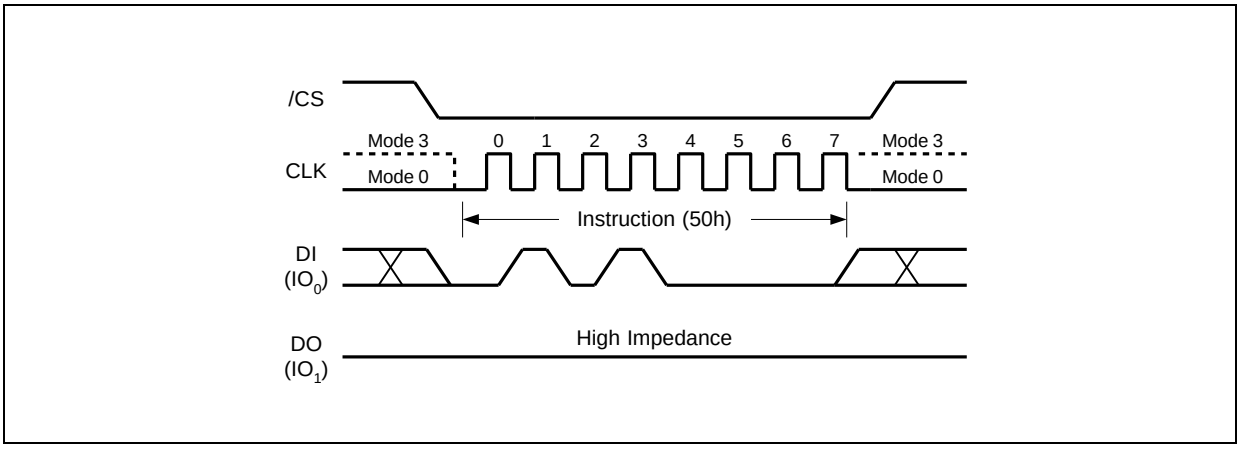

Figure 6. Write Enable for Volatile Status Register Instruction

8.2.4 Write Disable (04h)

The Write Disable instruction (Figure 7) resets the Write Enable Latch (WEL) bit in the Status Register to a 0. The Write Disable instruction is entered by driving /CS low, shifting the instruction code “04h” into the DI pin and then driving /CS high. Note that the WEL bit is automatically reset after Power-up and upon completion of the Write Status Register, Erase/Program Security Registers, Page Program, Quad Page Program, Sector Erase, Block Erase, Chip Erase and Reset instructions.

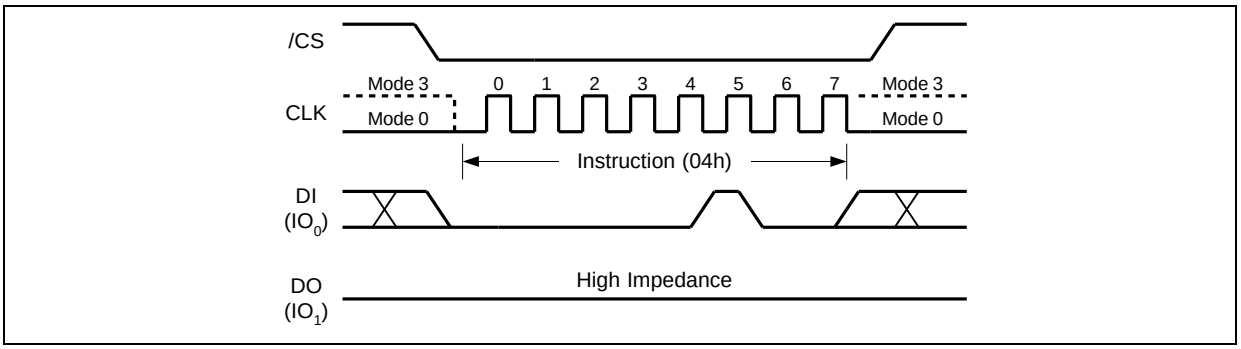

Figure 7. Write Disable Instruction

8.2.5 Read Status Register-1 (05h), Status Register-2 (35h) & Status Register-3 (15h)

The Read Status Register instructions allow the 8-bit Status Registers to be read. The instruction is entered by driving /CS low and shifting the instruction code “05h” for Status Register-1, “35h” for Status Register-2 or “15h” for Status Register-3 into the DI pin on the rising edge of CLK. The status register bits are then shifted out on the DO pin at the falling edge of CLK with most significant bit (MSB) first as shown in Figure 8. Refer to section 7.1 for Status Register descriptions.

The Read Status Register instruction may be used at any time, even while a Program, Erase or Write Status Register cycle is in progress. This allows the BUSY status bit to be checked to determine when the cycle is complete and if the device can accept another instruction. The Status Register can be read continuously, as shown in Figure 8. The instruction is completed by driving /CS high.

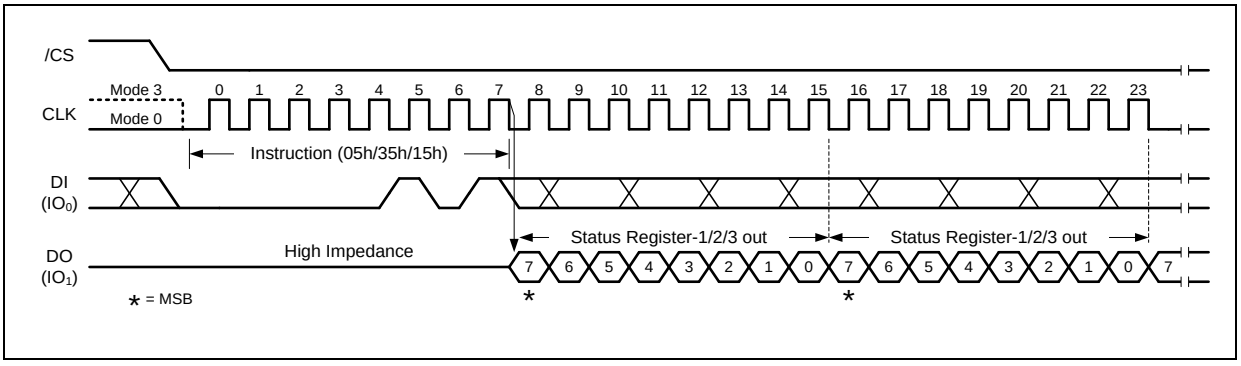

Figure 8. Read Status Register Instruction

8.2.6 Write Status Register-1 (01h), Status Register-2 (31h) & Status Register-3 (11h)

The Write Status Register instruction allows the Status Registers to be written. The writable Status Register bits include: TB, BP[3:0] in Status Register-1; CMP, LB[3:1], SRL in Status Register-2; DRV1, DRV0, WPS & ADP in Status Register-3. All other Status Register bit locations are read-only and will not be affected by the Write Status Register instruction. LB[3:1] are non-volatile OTP bits, once it is set to 1, it cannot be cleared to 0.

To write non-volatile Status Register bits, a standard Write Enable (06h) instruction must previously have been executed for the device to accept the Write Status Register instruction (Status Register bit WEL must equal 1). Once write enabled, the instruction is entered by driving /CS low, sending the instruction code "01h/31h/11h", and then writing the status register data byte as illustrated in Figure 9a & 9b.

To write volatile Status Register bits, a Write Enable for Volatile Status Register (50h) instruction must have been executed prior to the Write Status Register instruction (Status Register bit WEL remains 0). However, LB[3:1] cannot be changed from "1" to "0" because of the OTP protection for these bits. Upon power off or the execution of a Software/Hardware Reset, the volatile Status Register bit values will be lost, and the non-volatile Status Register bit values will be restored.

During non-volatile Status Register write operation (06h followed by 01h/31h/11h), after /CS is driven high, the self-timed Write Status Register cycle will commence for a time duration of tw (See AC Characteristics). While the Write Status Register cycle is in progress, the Read Status Register instruction may still be accessed to check the status of the BUSY bit. The BUSY bit is a 1 during the Write Status Register cycle and a 0 when the cycle is finished and ready to accept other instructions again. After the Write Status Register cycle has finished, the Write Enable Latch (WEL) bit in the Status Register will be cleared to 0.

During volatile Status Register write operation (50h followed by 01h/31h/11h), after /CS is driven high, the Status Register bits will be refreshed to the new values within the time period of t_{SHSL2} (See AC Characteristics). BUSY bit will remain 0 during the Status Register bit refresh period.

Refer to section 7.1 for Status Register descriptions. Factory default for all status Register bits are 0.

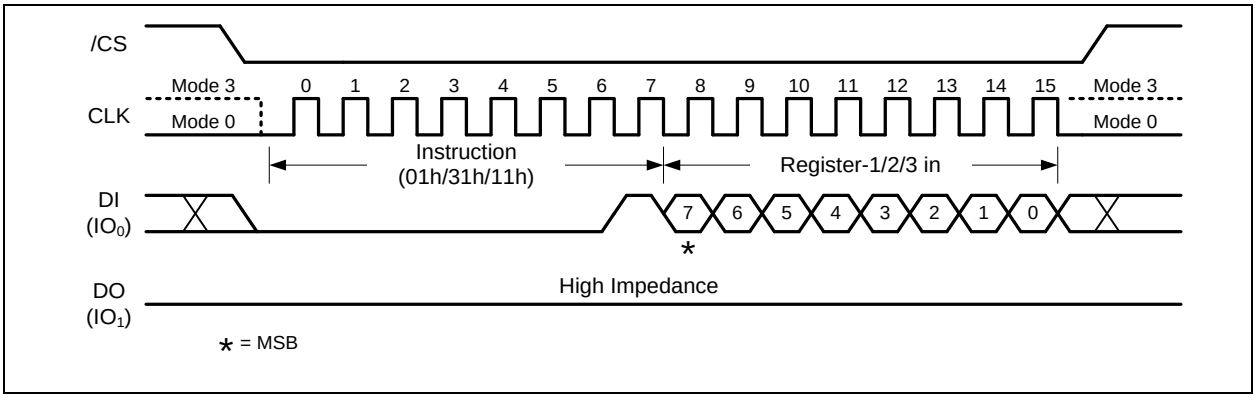

Figure 9a. Write Status Register-1/2/3 Instruction

The W25M512JV is also backward compatible to Winbond's previous generations of serial flash memories, in which the Status Register-1&2 can be written using a single "Write Status Register-1 (01h)" instruction. To complete the Write Status Register-1&2 instruction, the /CS pin must be driven high after the sixteenth bit of data that is clocked in as shown in Figure 9c & 9d. If /CS is driven high after the eighth clock, the Write Status Register-1 (01h) instruction will only program the Status Register-1, the Status Register-2 will not be affected (Previous generations will clear CMP bit).

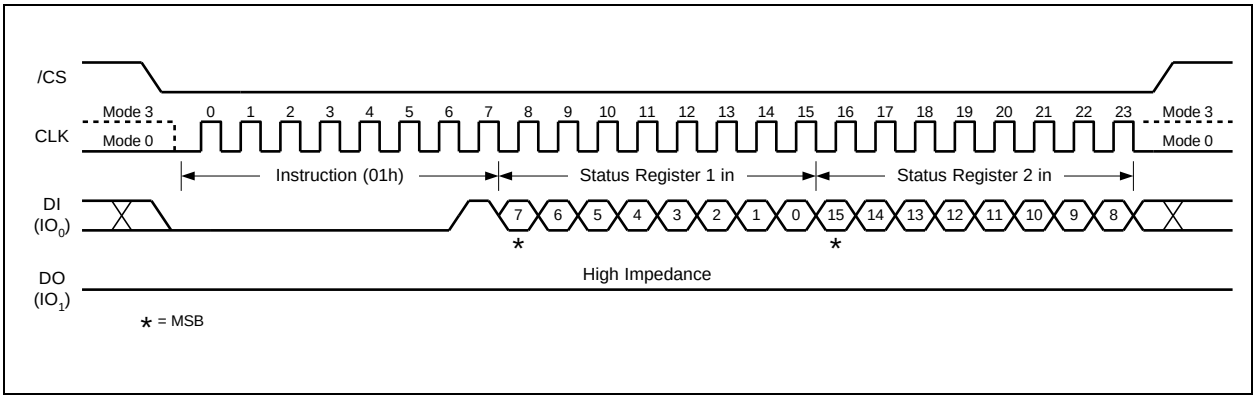

Figure 9b. Write Status Register-1/2 Instruction

8.2.7 Read Extended Address Register (C8h)

When the device is in the 3-Byte Address Mode, the Extended Address Register is used as the 4th address byte A[31:24] to access memory regions beyond 128Mb. The Read Extended Address Register instruction is entered by driving /CS low and shifting the instruction code “C8h” into the DI pin on the rising edge of CLK. The Extended Address Register bits are then shifted out on the DO pin at the falling edge of CLK with most significant bit (MSB) first as shown in Figure 10.

When the device is in the 4-Byte Address Mode, the Extended Address Register is not used.

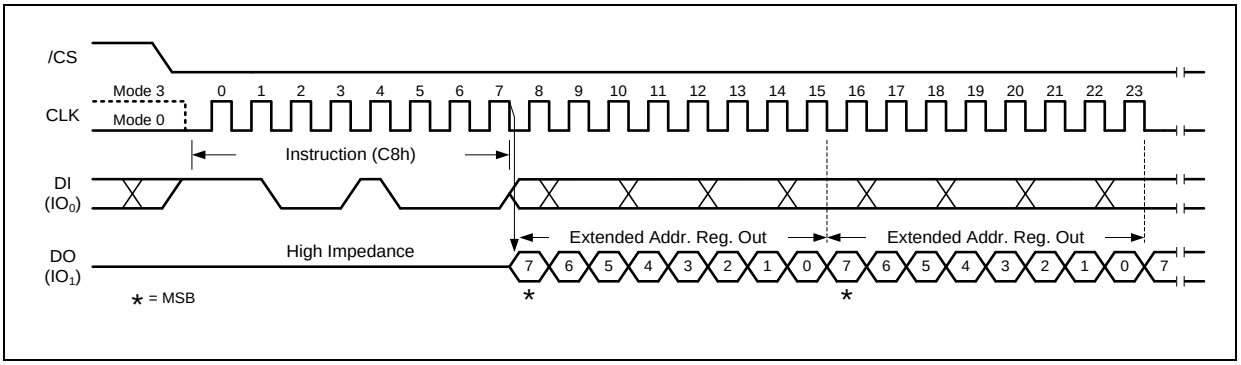

Figure 10. Read Extended Address Register Instruction

8.2.8 Write Extended Address Register (C5h)

The Extended Address Register is a volatile register that stores the 4th byte address (A31-A24) when the device is operating in the 3-Byte Address Mode (ADS=0). To write the Extended Address Register bits, a Write Enable (06h) instruction must previously have been executed for the device to accept the Write Extended Address Register instruction (Status Register bit WEL must equal 1). Once write enabled, the instruction is entered by driving /CS low, sending the instruction code “C5h”, and then writing the Extended Address Register data byte as illustrated in Figure 11.

Upon power up or the execution of a Software/Hardware Reset, the Extended Address Register bit values will be cleared to 0.

The Extended Address Register is only effective when the device is in the 3-Byte Address Mode. When the device operates in the 4-Byte Address Mode (ADS=1), any instruction with address input of A31-A24 will replace the Extended Address Register values. It is recommended to check and update the Extended Address Register if necessary when the device is switched from 4-Byte to 3-Byte Address Mode.

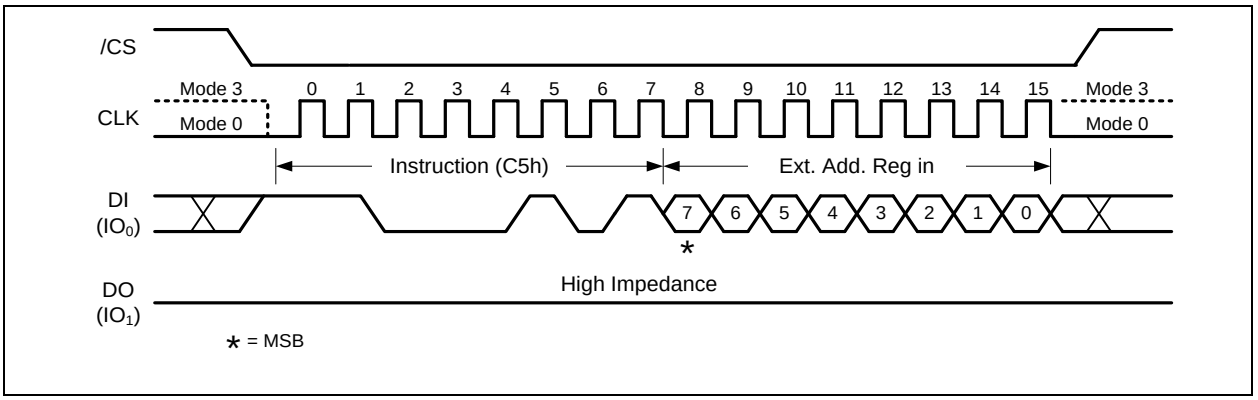

Figure 11. Write Extended Address Register Instruction

8.2.9 Enter 4-Byte Address Mode (B7h)

The Enter 4-Byte Address Mode instruction (Figure 12) will allow 32-bit address (A31-A0) to be used to access the memory array beyond 128Mb. The Enter 4-Byte Address Mode instruction is entered by driving /CS low, shifting the instruction code “B7h” into the DI pin and then driving /CS high.

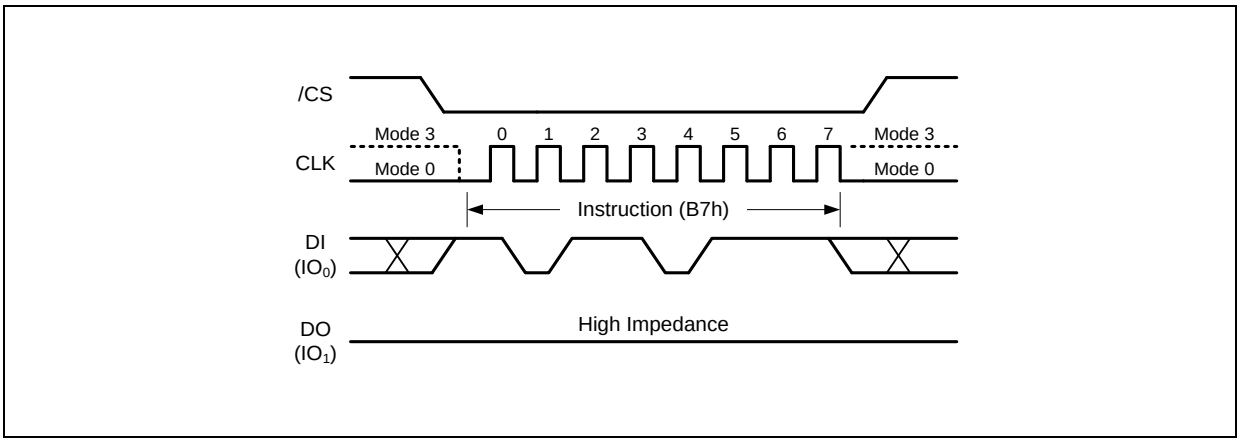

Figure 12. Enter 4-Byte Address Mode instruction

8.2.10 Exit 4-Byte Address Mode (E9h)

In order to be backward compatible, the Exit 4-Byte Address Mode instruction (Figure 13) will only allow 24-bit address (A23-A0) to be used to access the memory array up to 128Mb. The Extended Address Register must be used to access the memory array beyond 128Mb. The Exit 4-Byte Address Mode instruction is entered by driving /CS low, shifting the instruction code “E9h” into the DI pin and then driving /CS high.

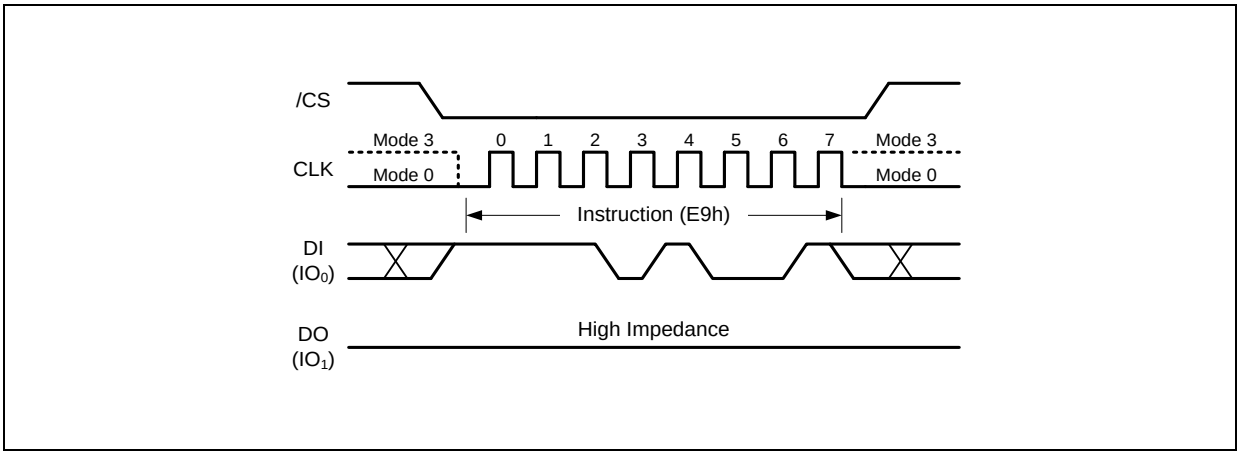

Figure 13. Exit 4-Byte Address Mode instruction

8.2.11 Read Data (03h)

The Read Data instruction allows one or more data bytes to be sequentially read from the memory. The instruction is initiated by driving the /CS pin low and then shifting the instruction code “03h” followed by a 32/24-bit address (A31/A23-A0) into the DI pin. The code and address bits are latched on the rising edge of the CLK pin. After the address is received, the data byte of the addressed memory location will be shifted out on the DO pin at the falling edge of CLK with most significant bit (MSB) first. The address is automatically incremented to the next higher address after each byte of data is shifted out allowing for a continuous stream of data. This means that the entire memory can be accessed with a single instruction as long as the clock continues. The instruction is completed by driving /CS high.

The Read Data instruction sequence is shown in Figure 14. If a Read Data instruction is issued while an Erase, Program or Write cycle is in process (BUSY=1) the instruction is ignored and will not have any effects on the current cycle. The Read Data instruction is a legacy SPI read instruction. There’s no dummy clock between Address Input and Data Output, therefore it can only operate up to 50MHz (see AC Electrical Characteristics f_R).

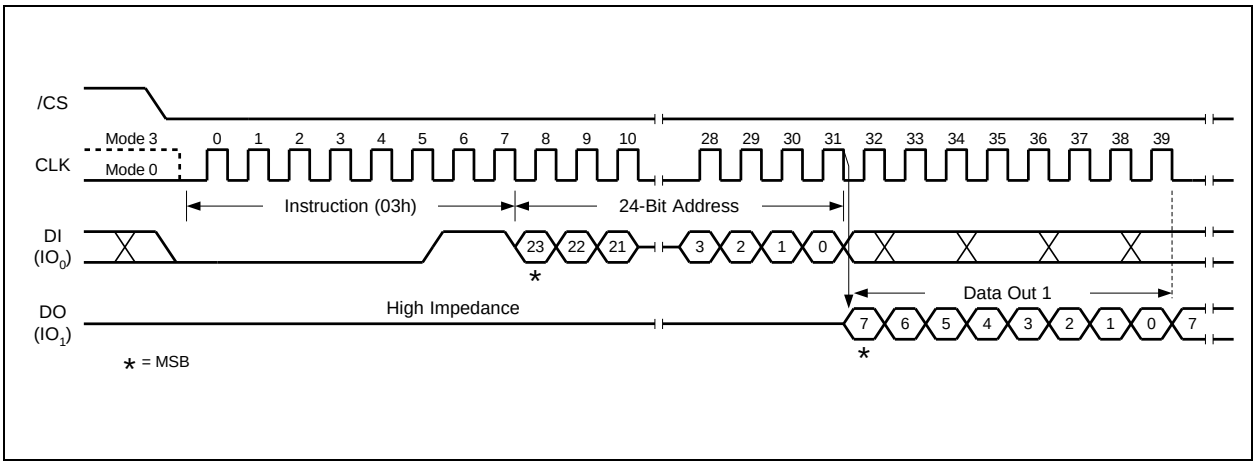

Figure 14. Read Data Instruction

32-Bit Address is required when the device is operating in 4-Byte Address Mode

8.2.12 Read Data with 4-Byte Address (13h)

The Read Data with 4-Byte Address instruction is similar to the Read Data (03h) instruction. Instead of 24-bit address, 32-bit address is needed following the instruction code 13h. No matter the device is operating in 3-Byte Address Mode or 4-byte Address Mode, the Read Data with 4-Byte Address instruction will always require 32-bit address to access the entire 256Mb memory.

The Read Data with 4-Byte Address instruction sequence is shown in Figure 15. If this instruction is issued while an Erase, Program or Write cycle is in process (BUSY=1) the instruction is ignored and will not have any effects on the current cycle. The Read Data with 4-Byte Address instruction allows clock rates from D.C. to a maximum of f_R (see AC Electrical Characteristics).

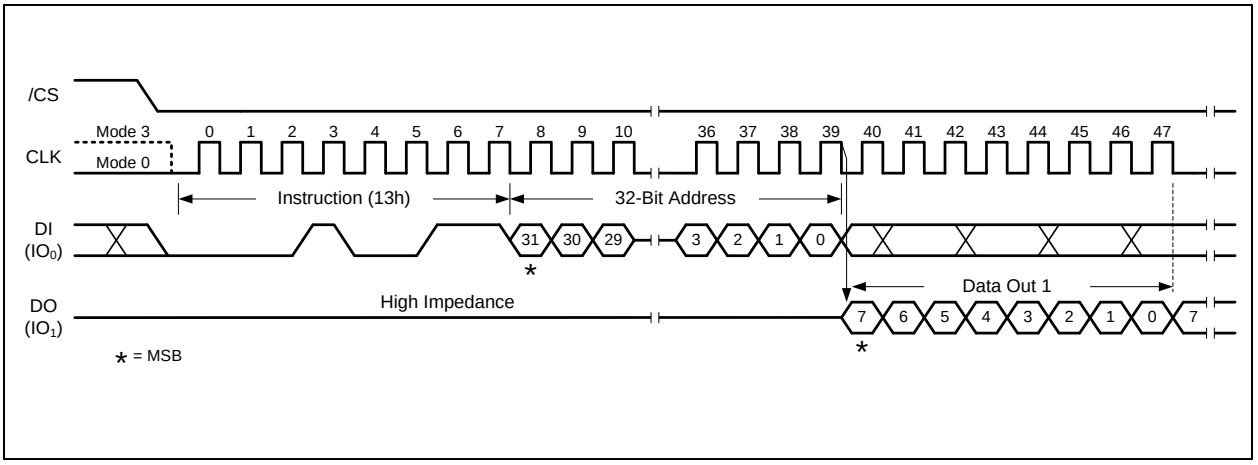

Figure 15. Read Data with 4-Byte Address Instruction

8.2.13 Fast Read (0Bh)

The Fast Read instruction is similar to the Read Data instruction except that it can operate at the highest possible frequency of FR (see AC Electrical Characteristics). This is accomplished by adding eight “dummy” clocks after the 24/32-bit address as shown in Figure 16. The dummy clocks allow the devices internal circuits additional time for setting up the initial address. During the dummy clocks the data value on the DO pin is a “don’t care”.

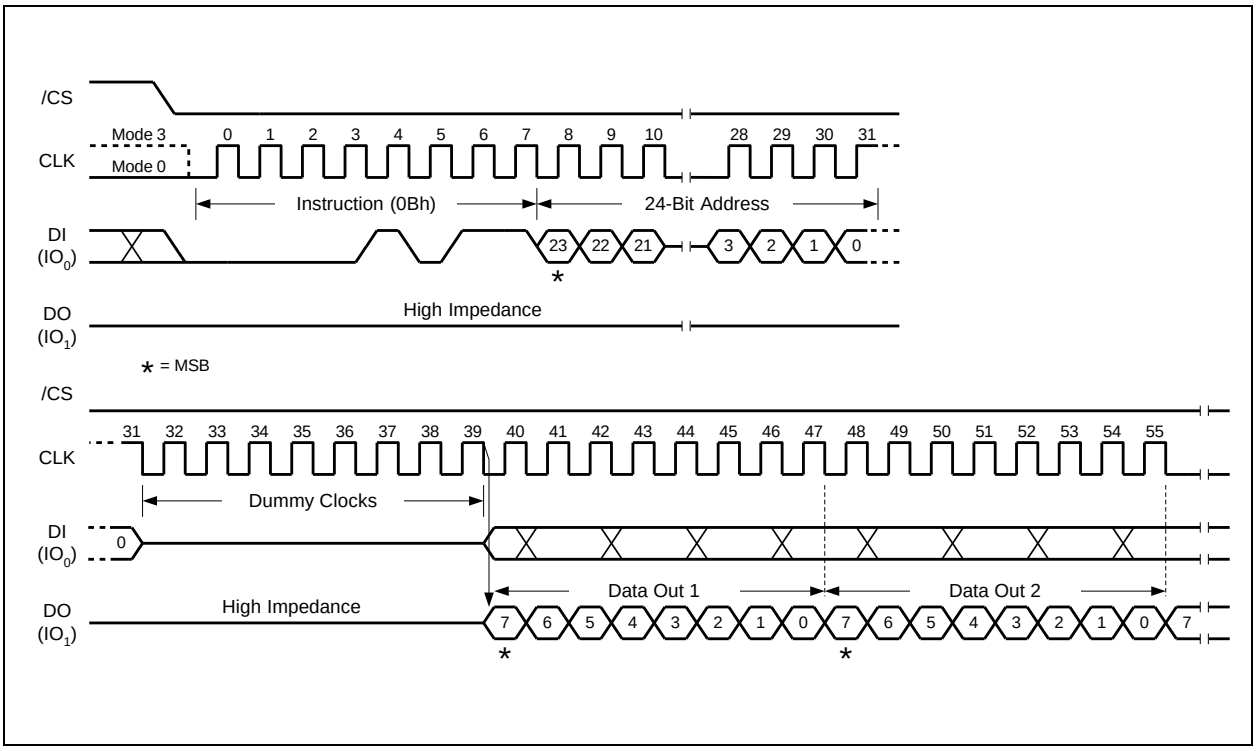

Figure 16. Fast Read Instruction

32-Bit Address is required when the device is operating in 4-Byte Address Mode

8.2.14 Fast Read with 4-Byte Address (0Ch)

The Fast Read with 4-Byte Address instruction is similar to the Fast Read instruction except that it requires 32-bit address instead of 24-bit address. No matter the device is operating in 3-Byte Address Mode or 4-byte Address Mode, the Read Data with 4-Byte Address instruction will always require 32-bit address to access the entire 256Mb memory.

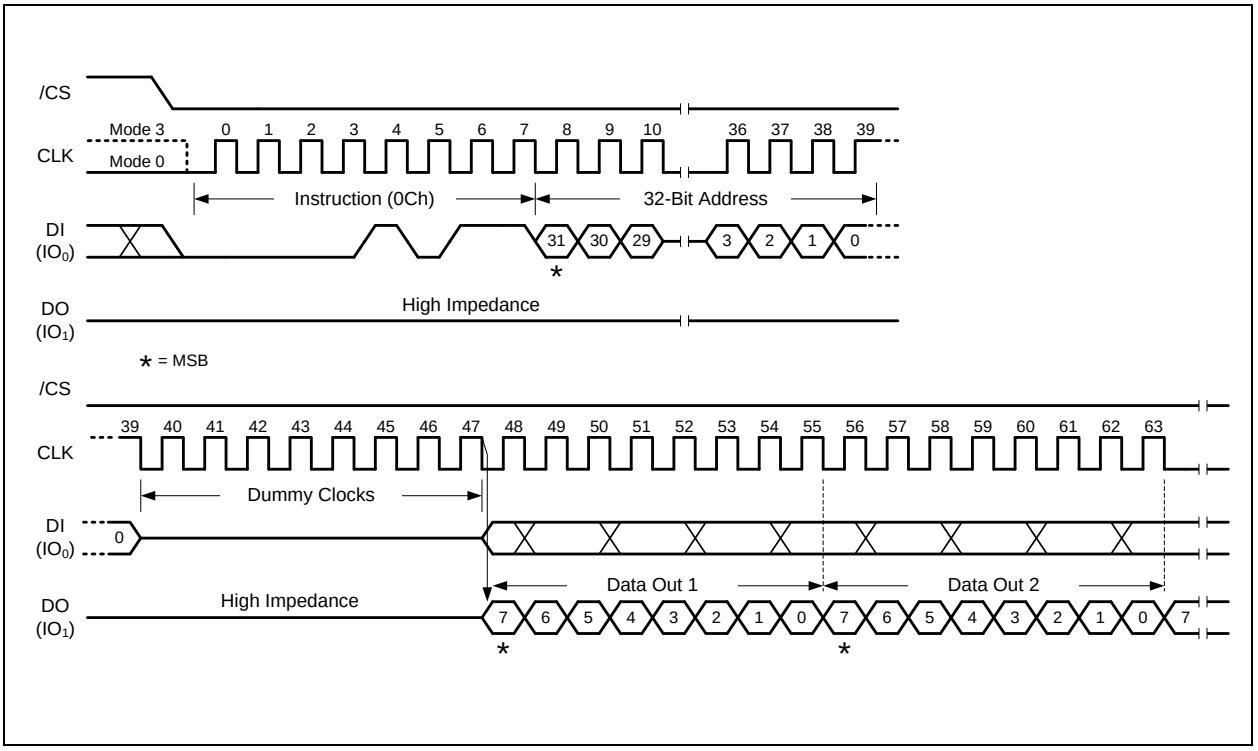

Figure 17. Fast Read with 4-Byte Address Instruction

8.2.16 Fast Read Dual Output (3Bh)

The Fast Read Dual Output (3Bh) instruction is similar to the standard Fast Read (0Bh) instruction except that data is output on two pins; IO_0 and IO_1. This allows data to be transferred at twice the rate of standard SPI devices. The Fast Read Dual Output instruction is ideal for quickly downloading code from Flash to RAM upon power-up or for applications that cache code-segments to RAM for execution.

Similar to the Fast Read instruction, the Fast Read Dual Output instruction can operate at the highest possible frequency of F_R (see AC Electrical Characteristics). This is accomplished by adding eight "dummy" clocks after the 24/32-bit address as shown in Figure 19. The dummy clocks allow the device's internal circuits additional time for setting up the initial address. The input data during the dummy clocks is "don't care". However, the IO_0 pin should be high-impedance prior to the falling edge of the first data out clock.

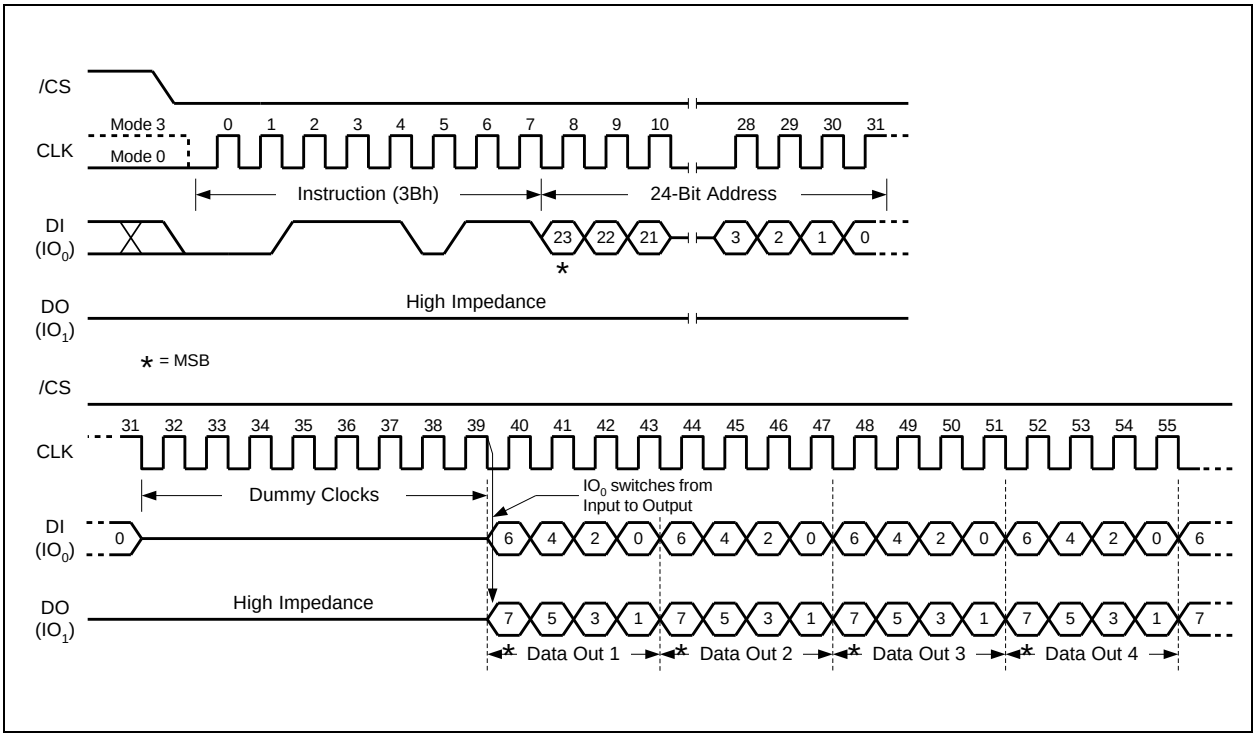

Figure 19. Fast Read Dual Output Instruction

32-Bit Address is required when the device is operating in 4-Byte Address Mode

8.2.17 Fast Read Dual Output with 4-Byte Address (3Ch)

The Fast Read Dual Output with 4-Byte Address instruction is similar to the Fast Read Dual Output instruction except that it requires 32-bit address instead of 24-bit address. No matter the device is operating in 3-Byte Address Mode or 4-byte Address Mode, the Fast Read Dual Output with 4-Byte Address instruction will always require 32-bit address to access the entire 256Mb memory.

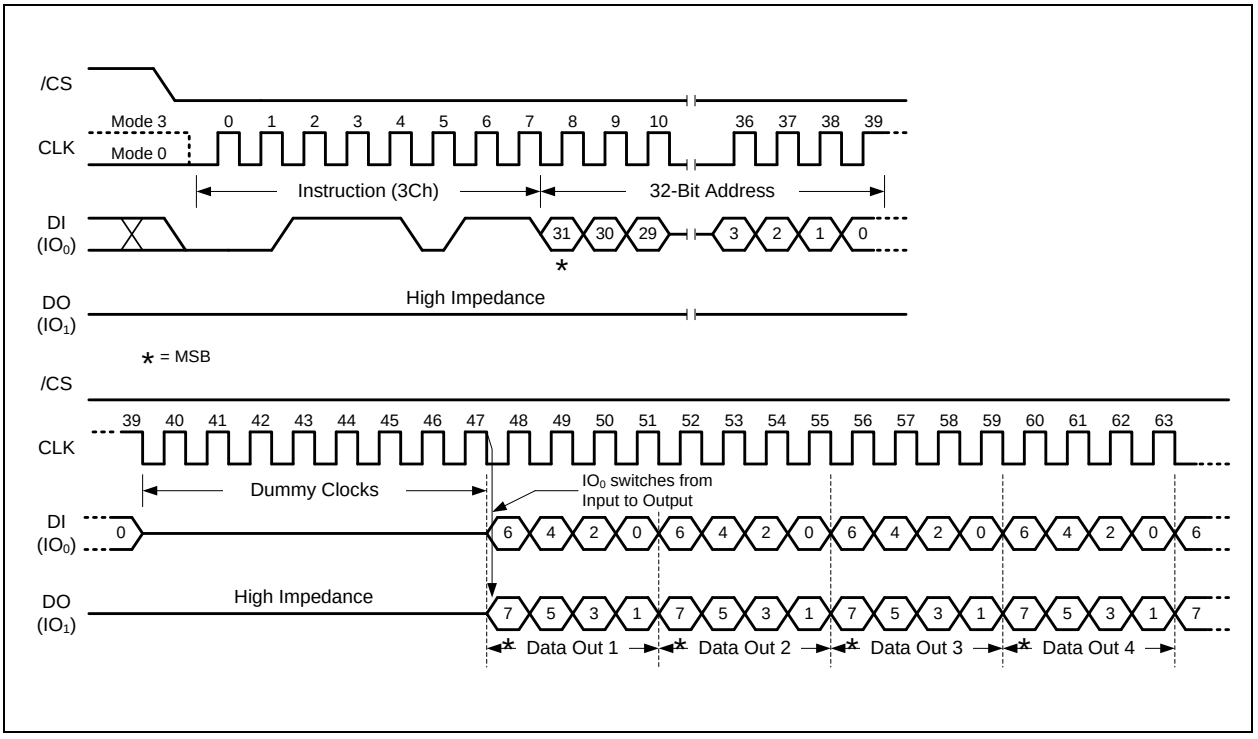

Figure 20. Fast Read Dual Output with 4-Byte Address Instruction

8.2.18 Fast Read Quad Output (6Bh)

The Fast Read Quad Output (6Bh) instruction is similar to the Fast Read Dual Output (3Bh) instruction except that data is output on four pins, IO_0, IO_1, IO_2, and IO_3. The Fast Read Quad Output Instruction allows data to be transferred at four times the rate of standard SPI devices.

The Fast Read Quad Output instruction can operate at the highest possible frequency of F_R (see AC Electrical Characteristics). This is accomplished by adding eight "dummy" clocks after the 24/32-bit address as shown in Figure 21. The dummy clocks allow the device's internal circuits additional time for setting up the initial address. The input data during the dummy clocks is "don't care". However, the IO pins should be high-impedance prior to the falling edge of the first data out clock.

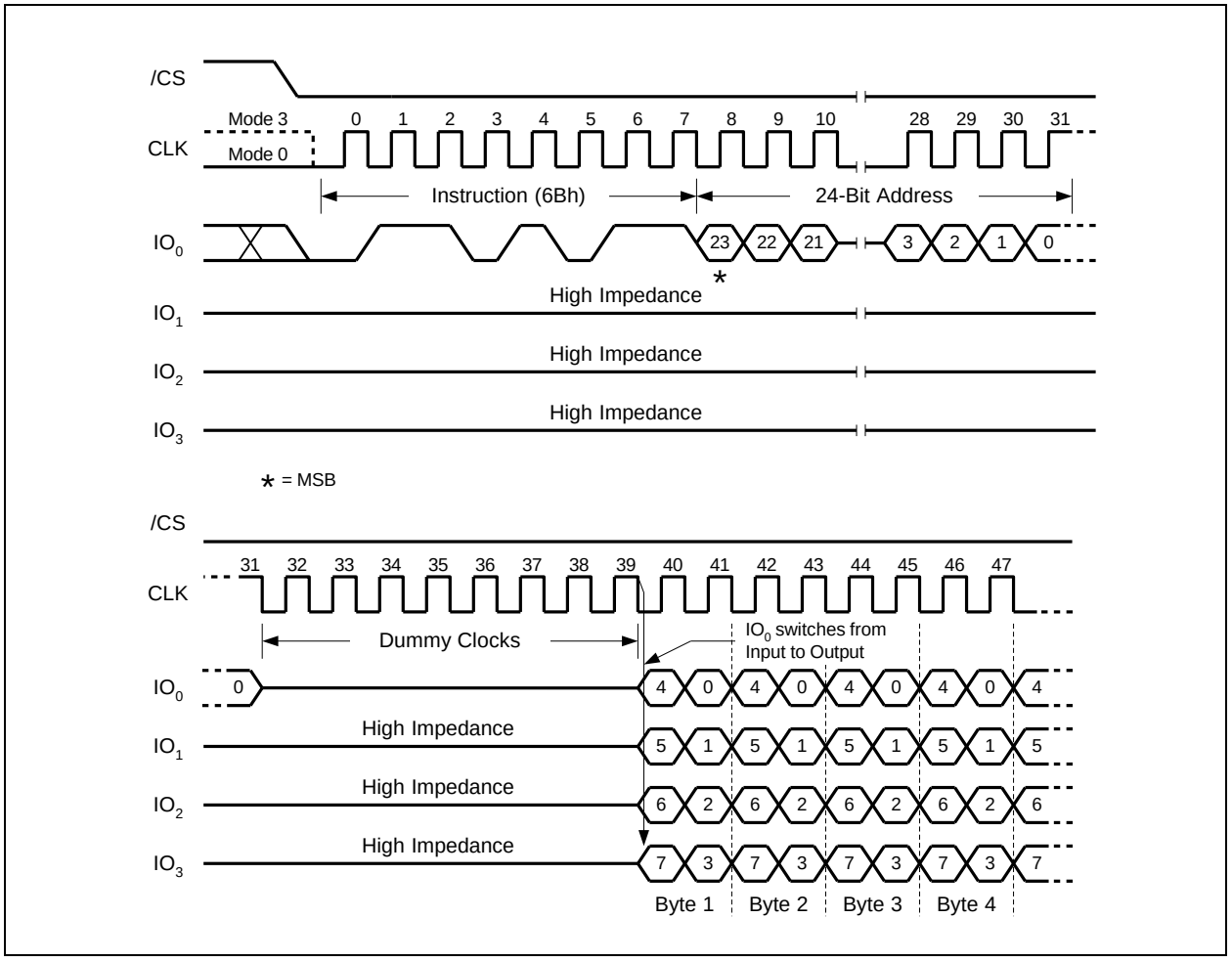

Figure 21. Fast Read Quad Output Instruction

32-Bit Address is required when the device is operating in 4-Byte Address Mode

8.2.19 Fast Read Quad Output with 4-Byte Address (6Ch)

The Fast Read Quad Output with 4-Byte Address instruction is similar to the Fast Read Quad Output instruction except that it requires 32-bit address instead of 24-bit address. No matter the device is operating in 3-Byte Address Mode or 4-byte Address Mode, the Fast Read Quad Output with 4-Byte Address instruction will always require 32-bit address to access the entire 256Mb memory.

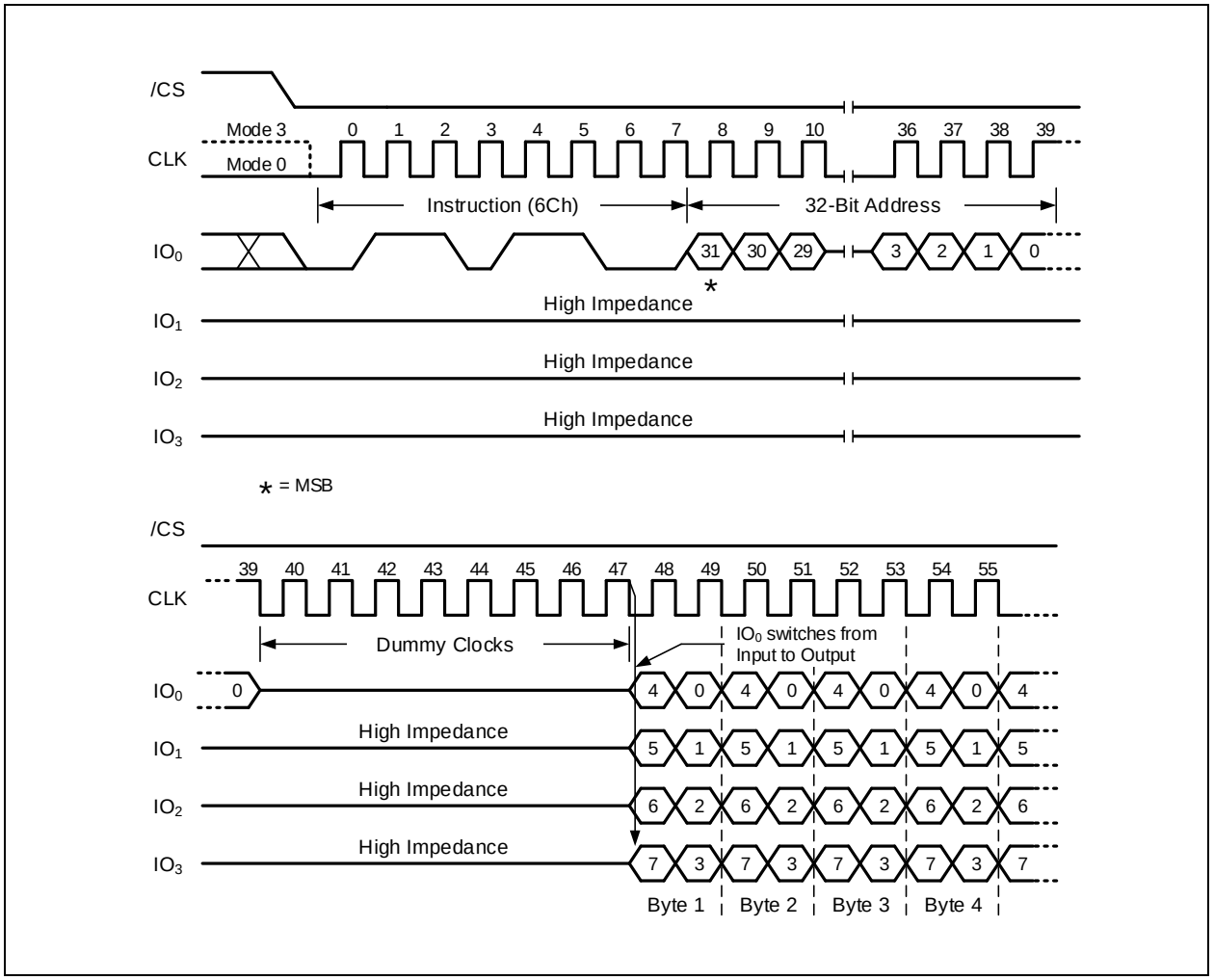

Figure 22. Fast Read Quad Output with 4-Byte Address Instruction

8.2.20 Fast Read Dual I/O (BBh)

The Fast Read Dual I/O (BBh) instruction allows for improved random access while maintaining two IO pins, IO_0 and IO_1. It is similar to the Fast Read Dual Output (3Bh) instruction but with the capability to input the Address bits (A23/A31-0) two bits per clock. This reduced instruction overhead may allow for code execution (XIP) directly from the Dual SPI in some applications.

Similar to the Fast Read Dual Output (3Bh) instruction, the Fast Read Dual I/O instruction can operate at the highest possible frequency of F_R (see AC Electrical Characteristics). This is accomplished by adding four “dummy” clocks after the 24/32-bit address as shown in Figure 23. The dummy clocks allow the device's internal circuits additional time for setting up the initial address. The input data during the dummy clocks is “don’t care”. However, the IO_0 pin should be high-impedance prior to the falling edge of the first data out clock.

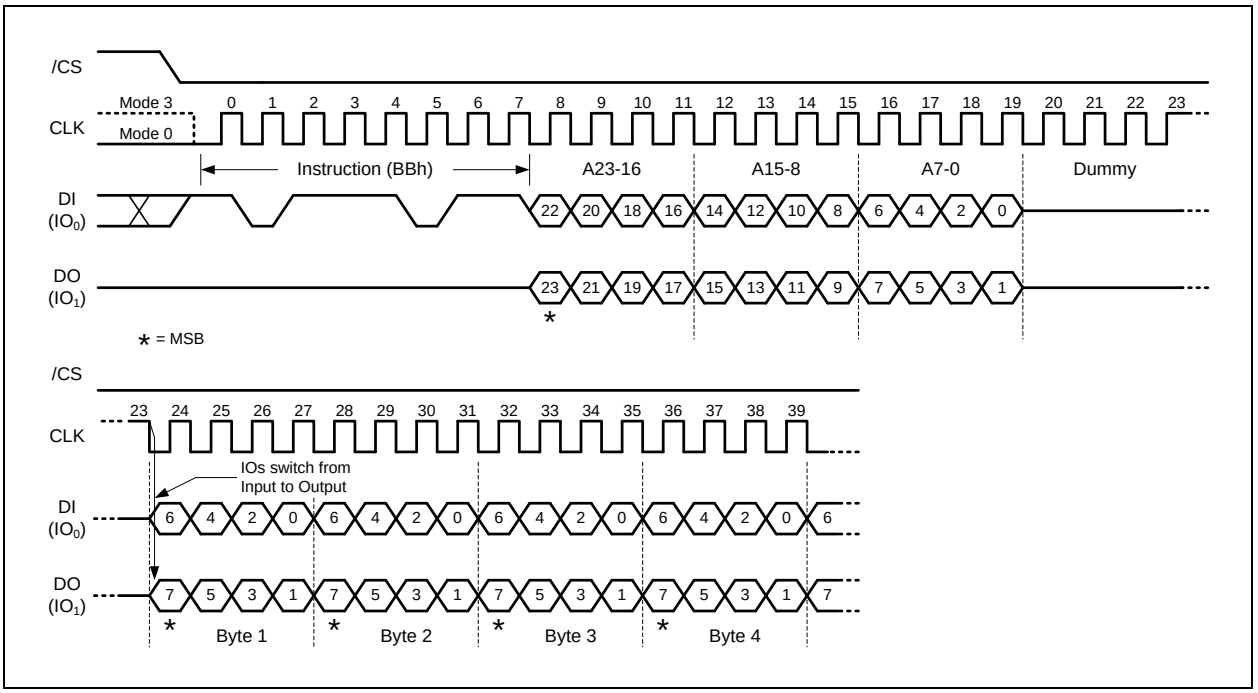

Figure 23. Fast Read Dual I/O Instruction

32-Bit Address is required when the device is operating in 4-Byte Address Mode

8.2.21 Fast Read Dual I/O with 4-Byte Address (BCh)

The Fast Read Dual I/O with 4-Byte Address instruction is similar to the Fast Read Dual I/O instruction except that it requires 32-bit address instead of 24-bit address. No matter the device is operating in 3-Byte Address Mode or 4-byte Address Mode, the Fast Read Dual I/O with 4-Byte Address instruction will always require 32-bit address to access the entire 256Mb memory.

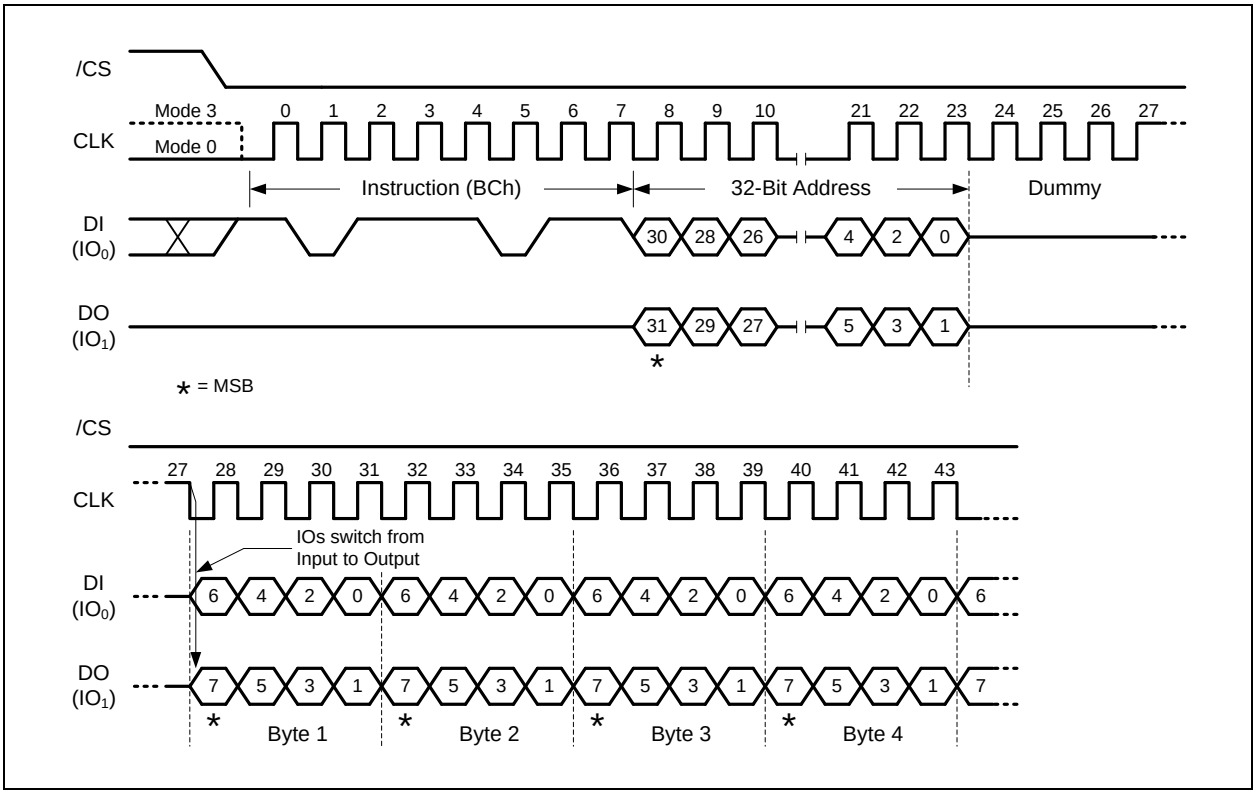

Figure 24. Fast Read Dual I/O w/ 4-Byte Address Instruction

8.2.22 Fast Read Quad I/O (EBh)

The Fast Read Quad I/O (EBh) instruction is similar to the Fast Read Dual I/O (BBh) instruction except that address and data bits are input and output through four pins IO_0, IO_1, IO_2 and IO_3 and six Dummy clocks are required in SPI mode prior to the data output. The Quad I/O dramatically reduces instruction overhead allowing faster random access for code execution (XIP) directly from the Quad SPI.

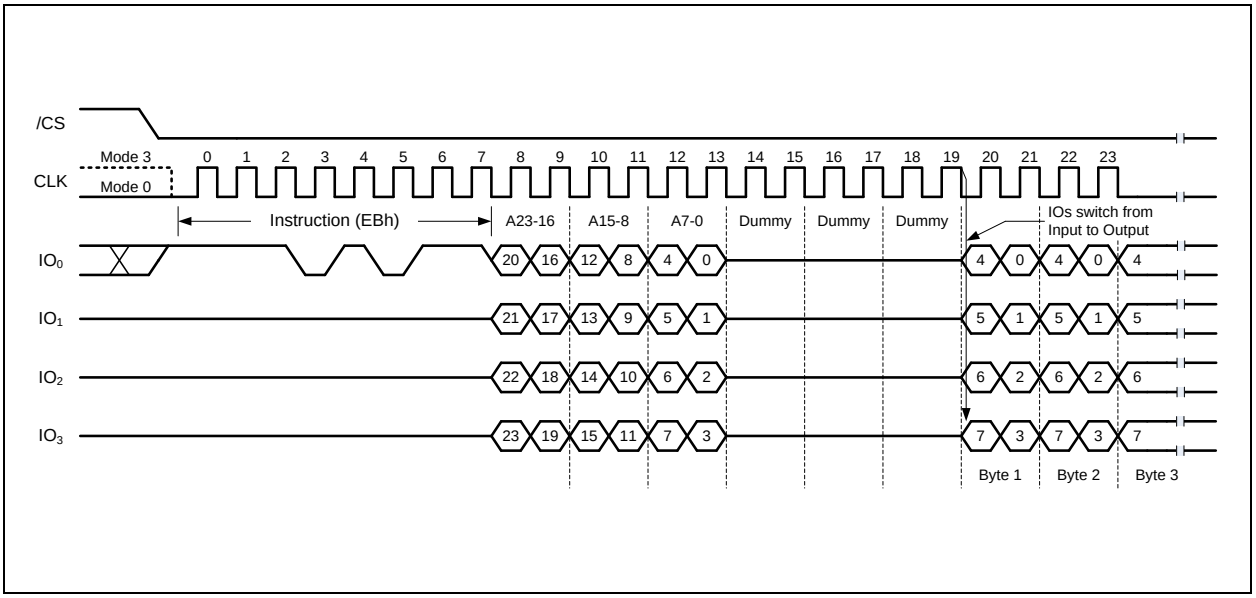

Figure 26. Fast Read Quad I/O Instruction

32-Bit Address is required when the device is operating in 4-Byte Address Mode

Fast Read Quad I/O with "8/16/32/64-Byte Wrap Around"

The Fast Read Quad I/O instruction can also be used to access a specific portion within a page by issuing a "Set Burst with Wrap" (77h) instruction prior to EBh. The "Set Burst with Wrap" (77h) instruction can either enable or disable the "Wrap Around" feature for the following EBh instructions. When "Wrap Around" is enabled, the data being accessed can be limited to either an 8, 16, 32 or 64-byte section of a 256-byte page. The output data starts at the initial address specified in the instruction, once it reaches the ending boundary of the 8/16/32/64-byte section, the output will wrap around to the beginning boundary automatically until /CS is pulled high to terminate the instruction.

The Burst with Wrap feature allows applications that use cache to quickly fetch a critical address and then fill the cache afterwards within a fixed length (8/16/32/64-byte) of data without issuing multiple read instructions.

The "Set Burst with Wrap" instruction allows three "Wrap Bits", W6-4 to be set. The W4 bit is used to enable or disable the "Wrap Around" operation while W6-5 are used to specify the length of the wrap around section within a page. Refer to section 8.2.26 for detail descriptions.

8.2.23 Fast Read Quad I/O with 4-Byte Address (ECh)

The Fast Read Quad I/O with 4-Byte Address instruction is similar to the Fast Read Quad I/O instruction except that it requires 32-bit address instead of 24-bit address. No matter the device is operating in 3-Byte Address Mode or 4-byte Address Mode, the Fast Read Quad I/O with 4-Byte Address instruction will always require 32-bit address to access the entire 256Mb memory.

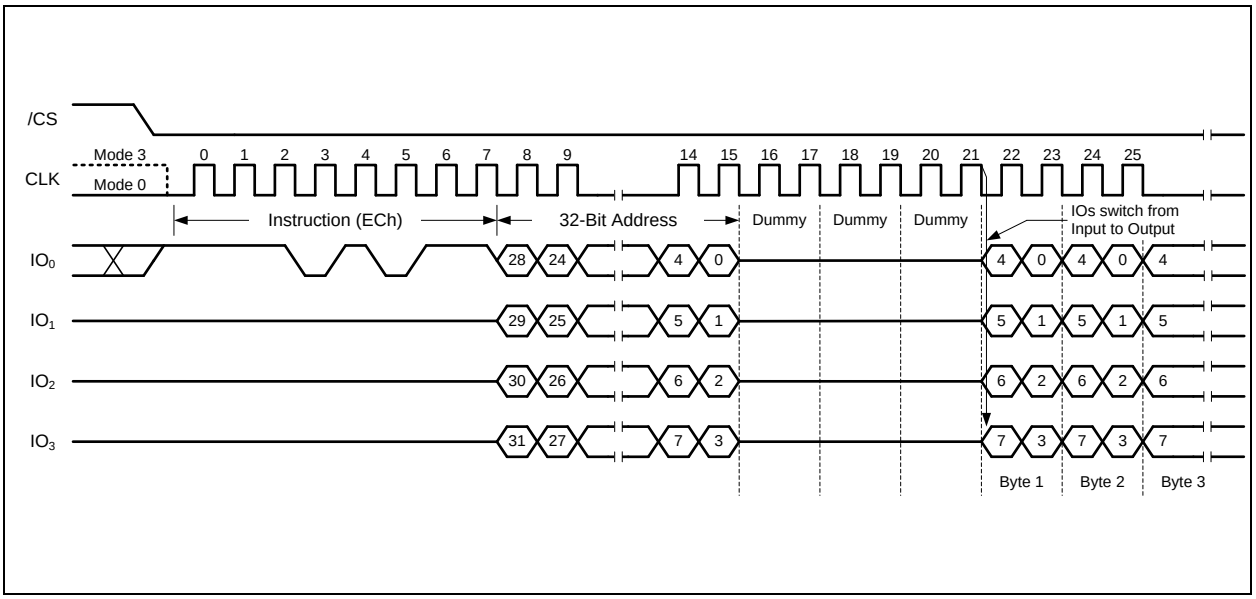

Figure 27. Fast Read Quad I/O w/ 4-Byte Address Instruction

Fast Read Quad I/O with "8/16/32/64-Byte Wrap Around"

The Fast Read Quad I/O with 4-Byte Address instruction can also be used to access a specific portion within a page by issuing a "Set Burst with Wrap" (77h) instruction prior to ECh. The "Set Burst with Wrap" (77h) instruction can either enable or disable the "Wrap Around" feature for the following ECh instructions. When "Wrap Around" is enabled, the data being accessed can be limited to either an 8, 16, 32 or 64-byte section of a 256-byte page. The output data starts at the initial address specified in the instruction, once it reaches the ending boundary of the 8/16/32/64-byte section, the output will wrap around to the beginning boundary automatically until /CS is pulled high to terminate the instruction.

The Burst with Wrap feature allows applications that use cache to quickly fetch a critical address and then fill the cache afterwards within a fixed length (8/16/32/64-byte) of data without issuing multiple read instructions.

The "Set Burst with Wrap" instruction allows three "Wrap Bits", W6-4 to be set. The W4 bit is used to enable or disable the "Wrap Around" operation while W6-5 are used to specify the length of the wrap around section within a page. Refer to section 8.2.26 for detail descriptions.

8.2.25 Set Burst with Wrap (77h)

The Set Burst with Wrap (77h) instruction is used in conjunction with “Fast Read Quad I/O” and “Word Read Quad I/O” instructions to access a fixed length of 8/16/32/64-byte section within a 256-byte page. Certain applications can benefit from this feature and improve the overall system code execution performance.

Similar to a Quad I/O instruction, the Set Burst with Wrap instruction is initiated by driving the /CS pin low and then shifting the instruction code “77h” followed by 24/32 dummy bits and 8 “Wrap Bits”, W7-0. The instruction sequence is shown in Figure 29. Wrap bit W7 and the lower nibble W3-0 are not used.

W6, W5	W4 = 0		W4 =1 (DEFAULT)	
	Wrap Around	**Wrap Length**	**Wrap Around**	**Wrap Length**
0 0	Yes	8-byte	No	N/A
0 1	Yes	16-byte	No	N/A
1 0	Yes	32-byte	No	N/A
1 1	Yes	64-byte	No	N/A

Once W6-4 is set by a Set Burst with Wrap instruction, all the following “Fast Read Quad I/O” and “Word Read Quad I/O” instructions will use the W6-4 setting to access the 8/16/32/64-byte section within any page. To exit the “Wrap Around” function and return to normal read operation, another Set Burst with Wrap instruction should be issued to set W4 = 1. The default value of W4 upon power on or after a software/hardware reset is 1.

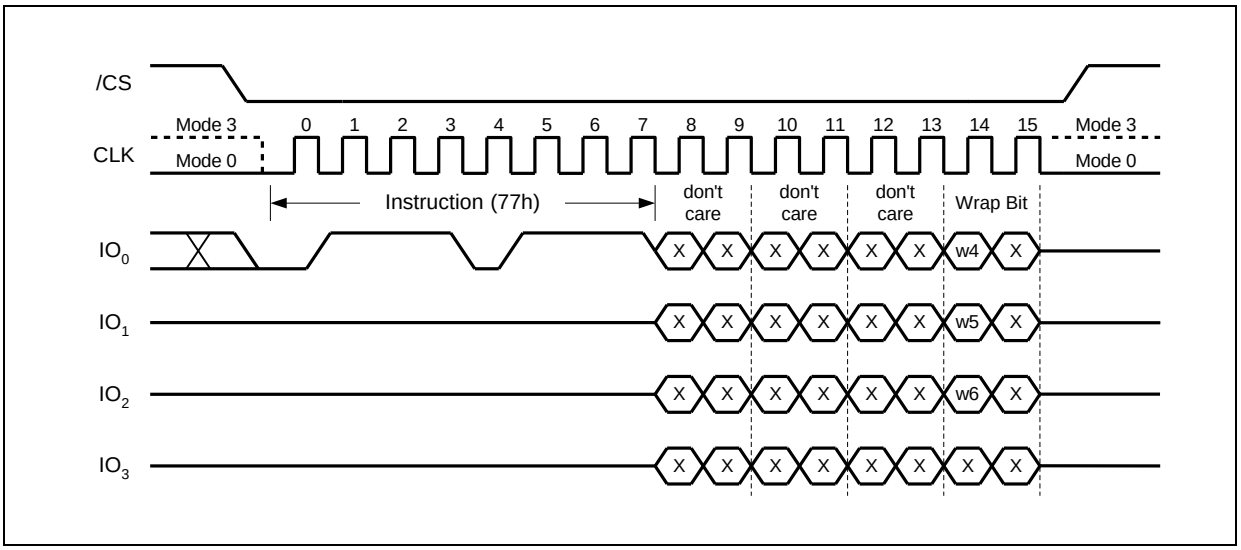

Figure 29. Set Burst with Wrap Instruction

32-Bit dummy bits are required when the device is operating in 4-Byte Address Mode

8.2.26 Page Program (02h)

The Page Program instruction allows from one byte to 256 bytes (a page) of data to be programmed at previously erased (FFh) memory locations. A Write Enable instruction must be executed before the device will accept the Page Program Instruction (Status Register bit WEL= 1). The instruction is initiated by driving the /CS pin low then shifting the instruction code “02h” followed by a 24/32-bit address (A23/A31-A0) and at least one data byte, into the DI pin. The /CS pin must be held low for the entire length of the instruction while data is being sent to the device. The Page Program instruction sequence is shown in Figure 30.

If an entire 256 byte page is to be programmed, the last address byte (the 8 least significant address bits) should be set to 0. If the last address byte is not zero, and the number of clocks exceeds the remaining page length, the addressing will wrap to the beginning of the page. In some cases, less than 256 bytes (a partial page) can be programmed without having any effect on other bytes within the same page. One condition to perform a partial page program is that the number of clocks cannot exceed the remaining page length. If more than 256 bytes are sent to the device the addressing will wrap to the beginning of the page and overwrite previously sent data.

As with the write and erase instructions, the /CS pin must be driven high after the eighth bit of the last byte has been latched. If this is not done the Page Program instruction will not be executed. After /CS is driven high, the self-timed Page Program instruction will commence for a time duration of tpp (See AC Characteristics). While the Page Program cycle is in progress, the Read Status Register instruction may still be accessed for checking the status of the BUSY bit. The BUSY bit is a 1 during the Page Program cycle and becomes a 0 when the cycle is finished and the device is ready to accept other instructions again. After the Page Program cycle has finished the Write Enable Latch (WEL) bit in the Status Register is cleared to 0. The Page Program instruction will not be executed if the addressed page is protected by the Block Protect (CMP, TB, BP3, BP2, BP1, and BP0) bits or the Individual Block/Sector Locks.

Multi-Die “Concurrent” Program can be performed by issuing two separate “Page Program” instructions respectively to the stacked dies. BUSY bit in each individual die’s Status Register can be polled to determine if the internal Program operation has finished or not.

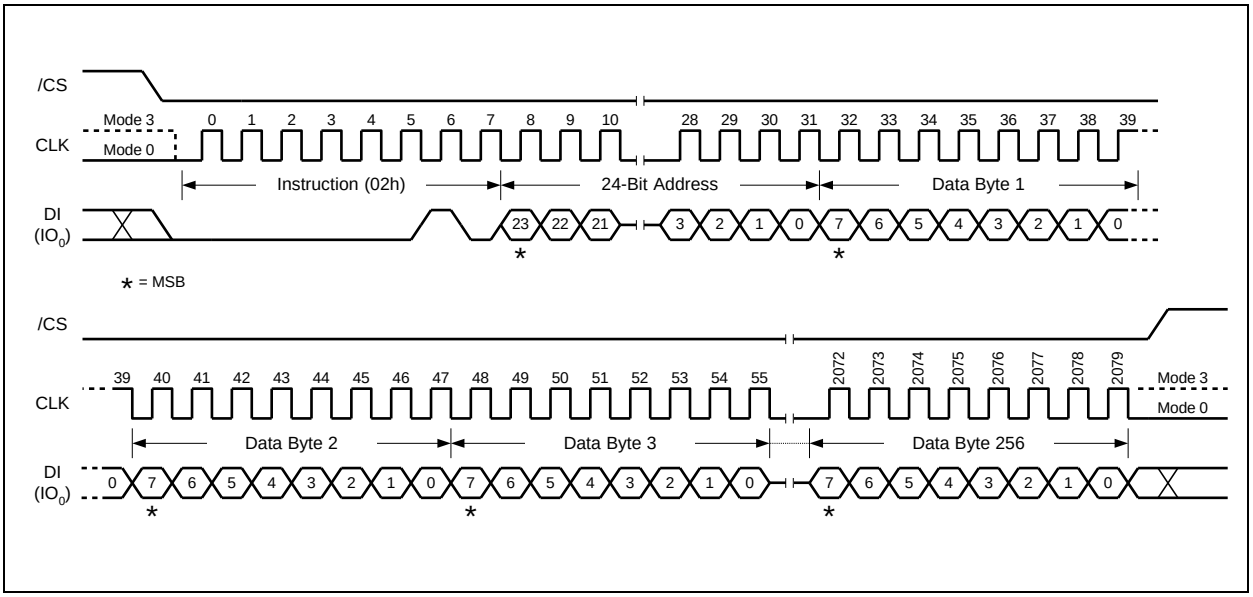

Figure 30. Page Program Instruction

32-Bit Address is required when the device is operating in 4-Byte Address Mode

8.2.27 Page Program with 4-Byte Address (12h)

The Page Program with 4-Byte Address instruction is similar to the Page Program instruction except that it requires 32-bit address instead of 24-bit address. No matter the device is operating in 3-Byte Address Mode or 4-byte Address Mode, the Page Program with 4-Byte Address instruction will always require 32-bit address to access the entire 256Mb memory.

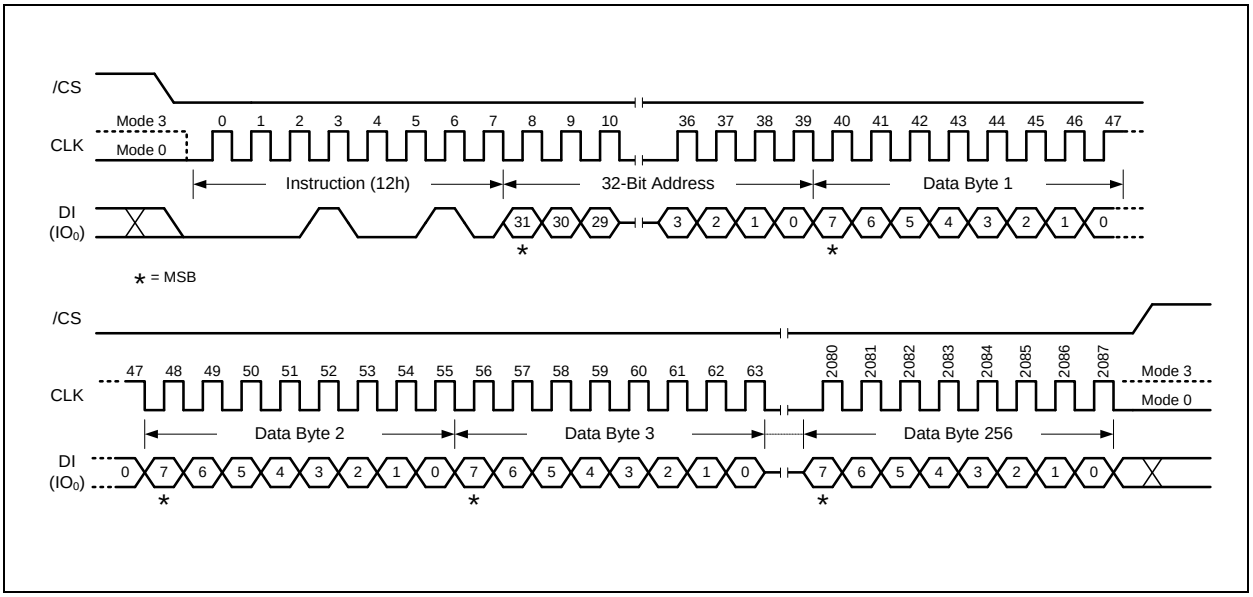

Figure 31. Page Program with 4-Byte Address Instruction

8.2.28 Quad Input Page Program (32h)

The Quad Page Program instruction allows up to 256 bytes of data to be programmed at previously erased (FFh) memory locations using four pins: IO_0, IO_1, IO_2, and IO_3. The Quad Page Program can improve performance for PROM Programmer and applications that have slow clock speeds <5MHz. Systems with faster clock speed will not realize much benefit for the Quad Page Program instruction since the inherent page program time is much greater than the time it take to clock-in the data.

To use Quad Page Program, a Write Enable instruction must be executed before the device will accept the Quad Page Program instruction (Status Register-1, WEL=1). The instruction is initiated by driving the /CS pin low then shifting the instruction code "32h" followed by a 24/32-bit address (A23/A31-A0) and at least one data byte, into the IO pins. The /CS pin must be held low for the entire length of the instruction while data is being sent to the device. All other functions of Quad Page Program are identical to standard Page Program. The Quad Page Program instruction sequence is shown in Figure 32.

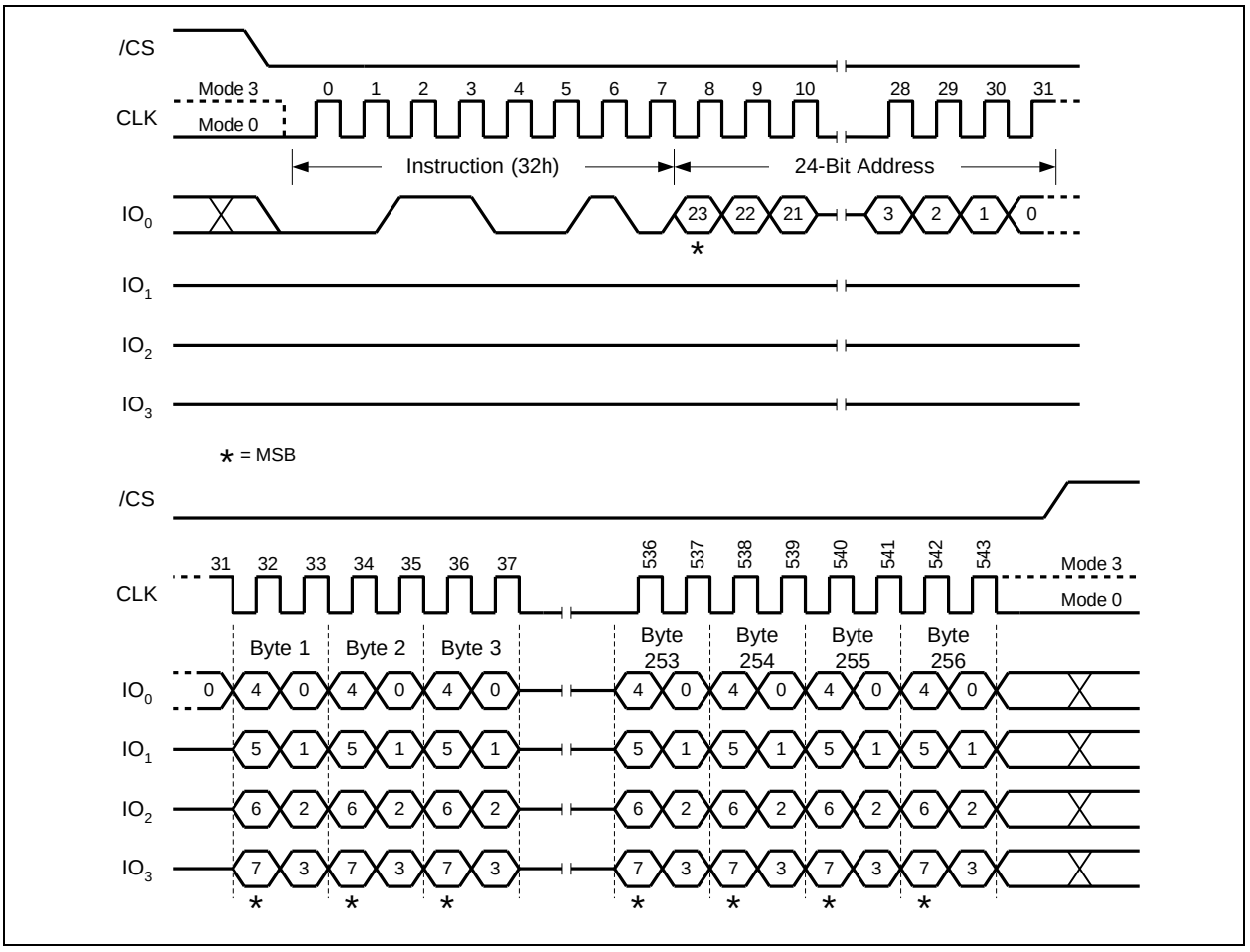

Figure 32. Quad Input Page Program Instruction

32-Bit Address is required when the device is operating in 4-Byte Address Mode

8.2.29 Quad Input Page Program with 4-Byte Address (34h)

The Quad Input Page Program with 4-Byte Address instruction is similar to the Quad Input Page Program instruction except that it requires 32-bit address instead of 24-bit address. No matter the device is operating in 3-Byte Address Mode or 4-byte Address Mode, the Quad Input Page Program with 4-Byte Address instruction will always require 32-bit address to access the entire 256Mb memory.

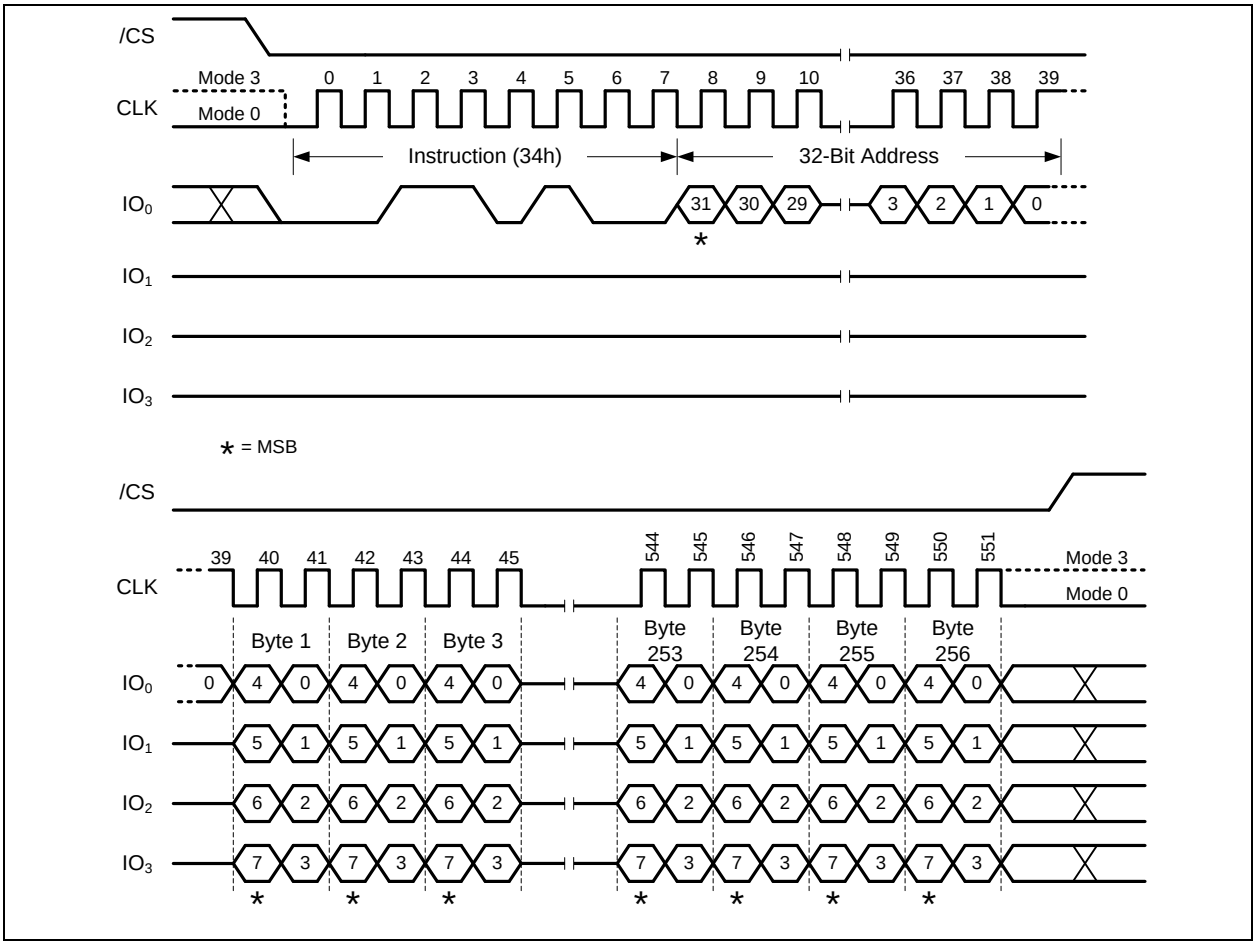

Figure 33. Quad Input Page Program with 4-Byte Address Instruction

8.2.30 Sector Erase (20h)

The Sector Erase instruction sets all memory within a specified sector (4K-bytes) to the erased state of all 1s (FFh). A Write Enable instruction must be executed before the device will accept the Sector Erase Instruction (Status Register bit WEL must equal 1). The instruction is initiated by driving the /CS pin low and shifting the instruction code “20h” followed a 24/32-bit sector address (A23/A31-A0). The Sector Erase instruction sequence is shown in Figure 34.

The /CS pin must be driven high after the eighth bit of the last byte has been latched. If this is not done the Sector Erase instruction will not be executed. After /CS is driven high, the self-timed Sector Erase instruction will commence for a time duration of t_{SE} (See AC Characteristics). While the Sector Erase cycle is in progress, the Read Status Register instruction may still be accessed for checking the status of the BUSY bit. The BUSY bit is a 1 during the Sector Erase cycle and becomes a 0 when the cycle is finished and the device is ready to accept other instructions again. After the Sector Erase cycle has finished the Write Enable Latch (WEL) bit in the Status Register is cleared to 0. The Sector Erase instruction will not be executed if the addressed page is protected by the Block Protect (CMP, TB, BP3, BP2, BP1, and BP0) bits or the Individual Block/Sector Locks.

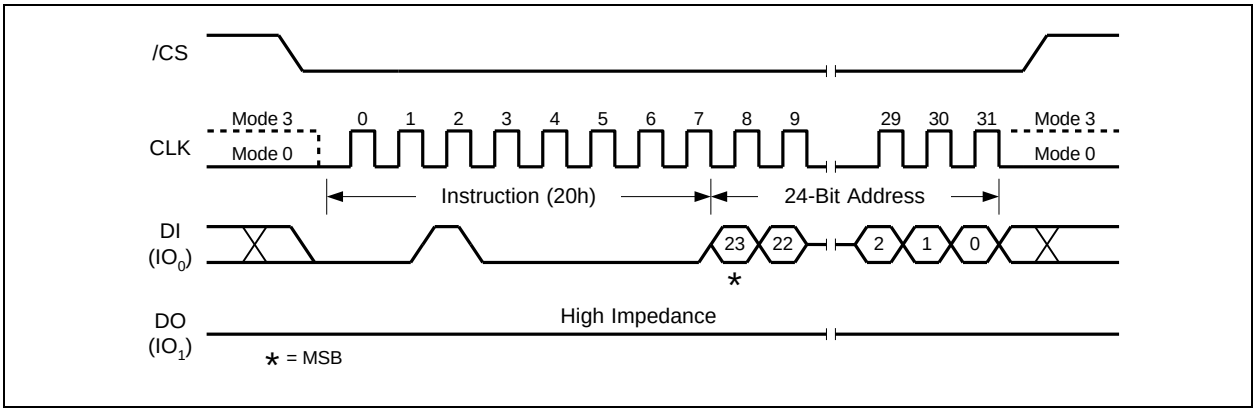

Figure 34. Sector Erase Instruction

32-Bit Address is required when the device is operating in 4-Byte Address Mode

8.2.31 Sector Erase with 4-Byte Address (21h)

The Sector Erase with 4-Byte Address instruction is similar to the Sector Erase instruction except that it requires 32-bit address instead of 24-bit address. No matter the device is operating in 3-Byte Address Mode or 4-byte Address Mode, the Sector Erase with 4-Byte Address instruction will always require 32-bit address to access the entire 256Mb memory.

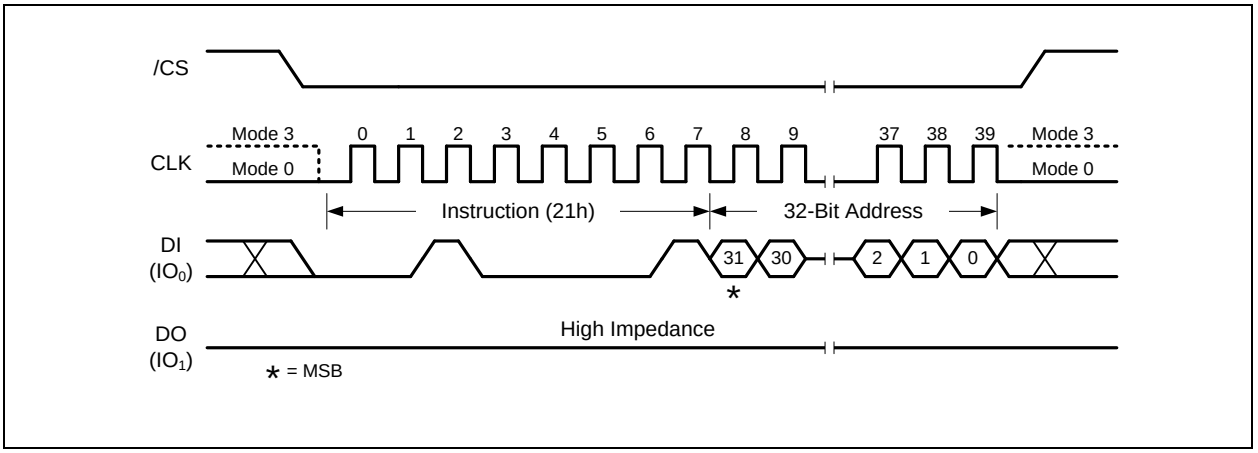

Figure 35. Sector Erase with 4-Byte Address Instruction

8.2.32 32KB Block Erase (52h)

The Block Erase instruction sets all memory within a specified block (32K-bytes) to the erased state of all 1s (FFh). A Write Enable instruction must be executed before the device will accept the Block Erase Instruction (Status Register bit WEL must equal 1). The instruction is initiated by driving the /CS pin low and shifting the instruction code “52h” followed a 24/32-bit block address (A23/A31-A0). The Block Erase instruction sequence is shown in Figure 36.

The /CS pin must be driven high after the eighth bit of the last byte has been latched. If this is not done the Block Erase instruction will not be executed. After /CS is driven high, the self-timed Block Erase instruction will commence for a time duration of t_{BE1} (See AC Characteristics). While the Block Erase cycle is in progress, the Read Status Register instruction may still be accessed for checking the status of the BUSY bit. The BUSY bit is a 1 during the Block Erase cycle and becomes a 0 when the cycle is finished and the device is ready to accept other instructions again. After the Block Erase cycle has finished the Write Enable Latch (WEL) bit in the Status Register is cleared to 0. The Block Erase instruction will not be executed if the addressed page is protected by the Block Protect (CMP, TB, BP3, BP2, BP1, and BP0) bits or the Individual Block/Sector Locks.

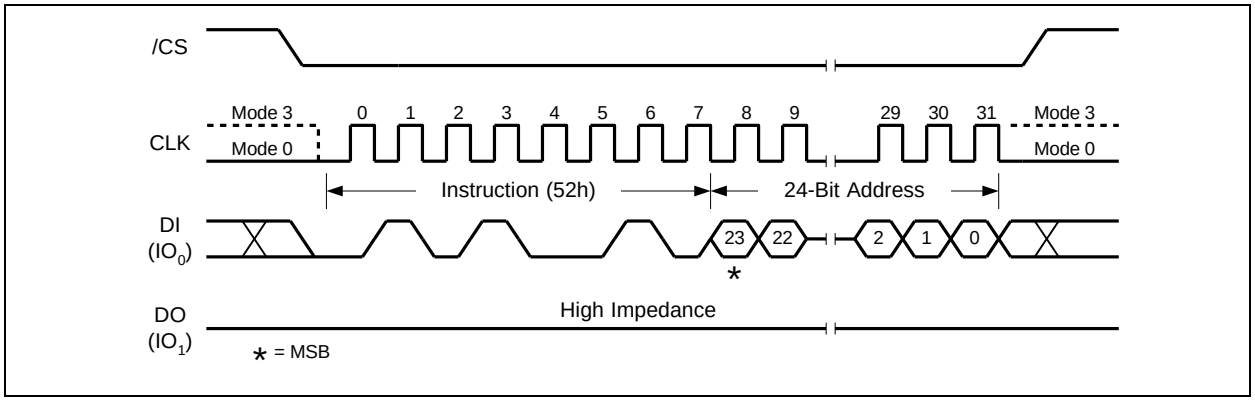

Figure 36. 32KB Block Erase Instruction

32-Bit Address is required when the device is operating in 4-Byte Address Mode

8.2.33 64KB Block Erase (D8h)

The Block Erase instruction sets all memory within a specified block (64K-bytes) to the erased state of all 1s (FFh). A Write Enable instruction must be executed before the device will accept the Block Erase Instruction (Status Register bit WEL must equal 1). The instruction is initiated by driving the /CS pin low and shifting the instruction code “D8h” followed a 24/32-bit block address (A23/A31-A0). The Block Erase instruction sequence is shown in Figure 37.

The /CS pin must be driven high after the eighth bit of the last byte has been latched. If this is not done the Block Erase instruction will not be executed. After /CS is driven high, the self-timed Block Erase instruction will commence for a time duration of t_{BE} (See AC Characteristics). While the Block Erase cycle is in progress, the Read Status Register instruction may still be accessed for checking the status of the BUSY bit. The BUSY bit is a 1 during the Block Erase cycle and becomes a 0 when the cycle is finished and the device is ready to accept other instructions again. After the Block Erase cycle has finished the Write Enable Latch (WEL) bit in the Status Register is cleared to 0. The Block Erase instruction will not be executed if the addressed page is protected by the Block Protect (CMP, TB, BP3, BP2, BP1, and BP0) bits or the Individual Block/Sector Locks.

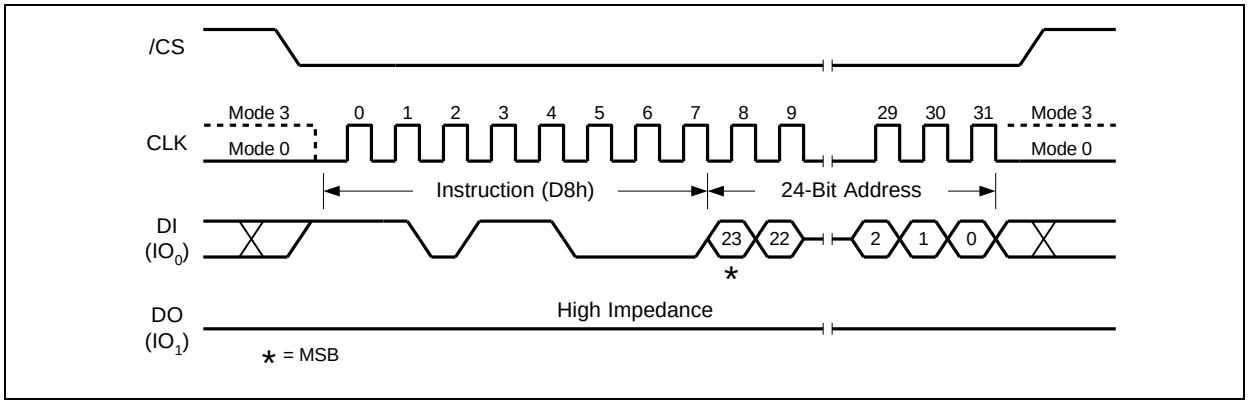

Figure 37. 64KB Block Erase Instruction

32-Bit Address is required when the device is operating in 4-Byte Address Mode

8.2.34 64KB Block Erase with 4-Byte Address (DCh)

The 64KB Block Erase with 4-Byte Address instruction is similar to the 64KB Block Erase instruction except that it requires 32-bit address instead of 24-bit address. No matter the device is operating in 3-Byte Address Mode or 4-byte Address Mode, the 64KB Block Erase with 4-Byte Address instruction will always require 32-bit address to access the entire 256Mb memory.

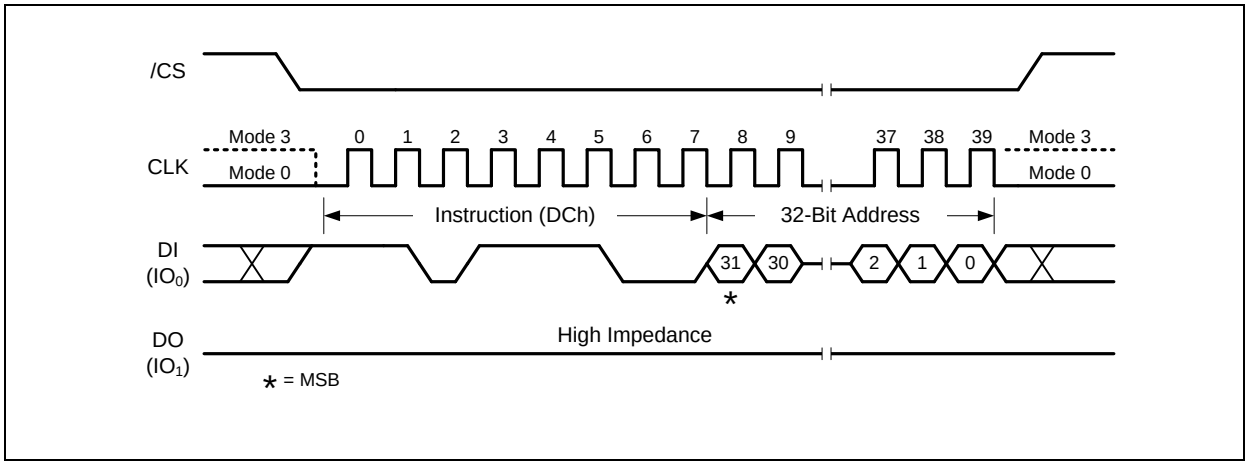

Figure 38. 64KB Block Erase with 4-Byte Address Instruction

8.2.35 Single Die Chip Erase (C7h / 60h)

The Single Die Chip Erase instruction sets all memory area of an individual die stacked within W25M512JV to the erased state of all 1s (FFh). A Write Enable instruction must be executed before the device will accept the Single Die Chip Erase Instruction (Status Register bit WEL must equal 1). The instruction is initiated by driving the /CS pin low and shifting the instruction code “C7h” or “60h”. The Single Die Chip Erase instruction sequence is shown in Figure 39.

The /CS pin must be driven high after the eighth bit has been latched. If this is not done the Chip Erase instruction will not be executed. After /CS is driven high, the self-timed Single Die Chip Erase instruction will commence for a time duration of tCE (See AC Characteristics). While the Chip Erase cycle is in progress, the Read Status Register instruction may still be accessed to check the status of the BUSY bit. The BUSY bit is a 1 during the Chip Erase cycle and becomes a 0 when finished and the device is ready to accept other instructions again. After the Chip Erase cycle has finished the Write Enable Latch (WEL) bit in the Status Register is cleared to 0. The Chip Erase instruction will not be executed if any memory region is protected by the Block Protect (CMP, TB, BP3, BP2, BP1, and BP0) bits or the Individual Block/Sector Locks.

Multi-Die “Concurrent” Erase can be performed by issuing two separate “Single Die Chip Erase” instructions respectively to the stacked dies. BUSY bit in each individual die’s Status Register can be polled to determine if the internal Erase operation has finished or not.

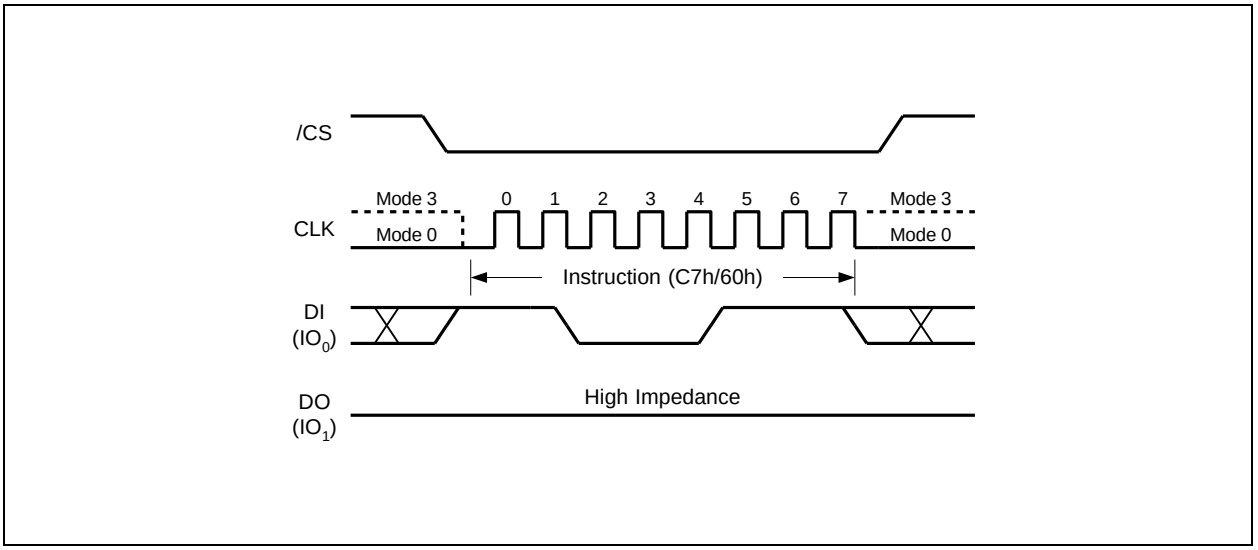

Figure 39. Single Die Chip Erase Instruction

8.2.36 Erase / Program Suspend (75h)

The Erase/Program Suspend instruction “75h”, allows the system to interrupt a Sector or Block Erase operation or a Page Program operation and then read from or program/erase data to, any other sectors or blocks. The Erase/Program Suspend instruction sequence is shown in Figure 40.

The Write Status Register instruction (01h) and Erase instructions (20h, 52h, D8h, C7h, 60h, 44h) are not allowed during Erase Suspend. Erase Suspend is valid only during the Sector or Block erase operation. If written during the Chip Erase operation, the Erase Suspend instruction is ignored. The Write Status Register instruction (01h) and Program instructions (02h, 32h, 42h) are not allowed during Program Suspend. Program Suspend is valid only during the Page Program or Quad Page Program operation.

The Erase/Program Suspend instruction “75h” will be accepted by the device only if the SUS bit in the Status Register equals to 0 and the BUSY bit equals to 1 while a Sector or Block Erase or a Page Program operation is on-going. If the SUS bit equals to 1 or the BUSY bit equals to 0, the Suspend instruction will be ignored by the device. A maximum of time of “t_{SUS}” (See AC Characteristics) is required to suspend the erase or program operation. The BUSY bit in the Status Register will be cleared from 1 to 0 within “t_{SUS}” and the SUS bit in the Status Register will be set from 0 to 1 immediately after Erase/Program Suspend. For a previously resumed Erase/Program operation, it is also required that the Suspend instruction “75h” is not issued earlier than a minimum of time of “t_{SUS}” following the preceding Resume instruction “7Ah”.

Unexpected power off during the Erase/Program suspend state will reset the device and release the suspend state. SUS bit in the Status Register will also reset to 0. The data within the page, sector or block that was being suspended may become corrupted. It is recommended for the user to implement system design techniques against the accidental power interruption and preserve data integrity during erase/program suspend state.

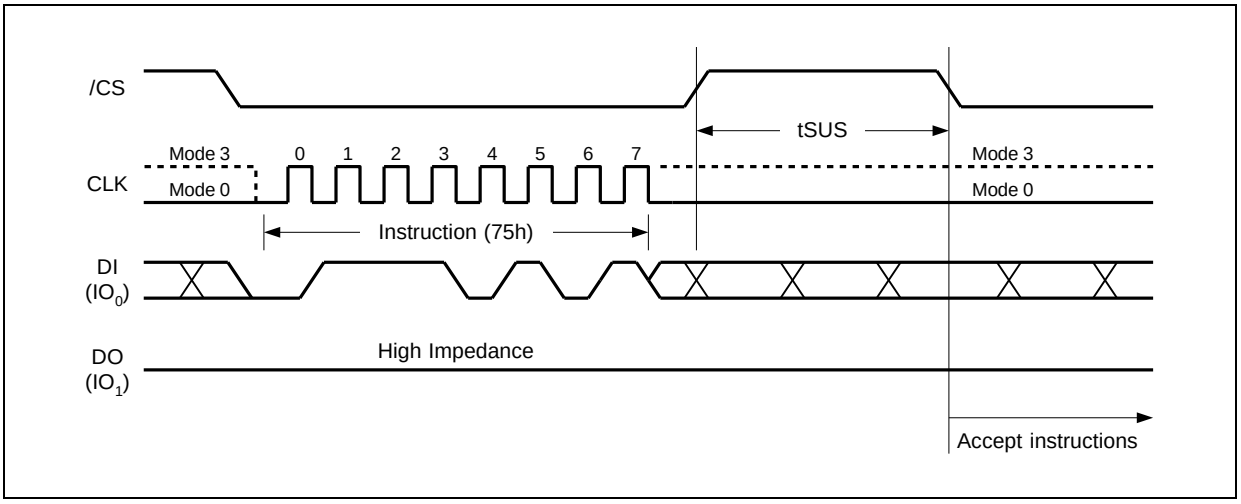

Figure 40. Erase/Program Suspend Instruction

8.2.37 Erase / Program Resume (7Ah)

The Erase/Program Resume instruction “7Ah” must be written to resume the Sector or Block Erase operation or the Page Program operation after an Erase/Program Suspend. The Resume instruction “7Ah” will be accepted by the device only if the SUS bit in the Status Register equals to 1 and the BUSY bit equals to 0. After issued the SUS bit will be cleared from 1 to 0 immediately, the BUSY bit will be set from 0 to 1 within 200ns and the Sector or Block will complete the erase operation or the page will complete the program operation. If the SUS bit equals to 0 or the BUSY bit equals to 1, the Resume instruction “7Ah” will be ignored by the device. The Erase/Program Resume instruction sequence is shown in Figure 41.

Resume instruction is ignored if the previous Erase/Program Suspend operation was interrupted by unexpected power off. It is also required that a subsequent Erase/Program Suspend instruction not to be issued within a minimum of time of “t_{SUS}” following a previous Resume instruction.

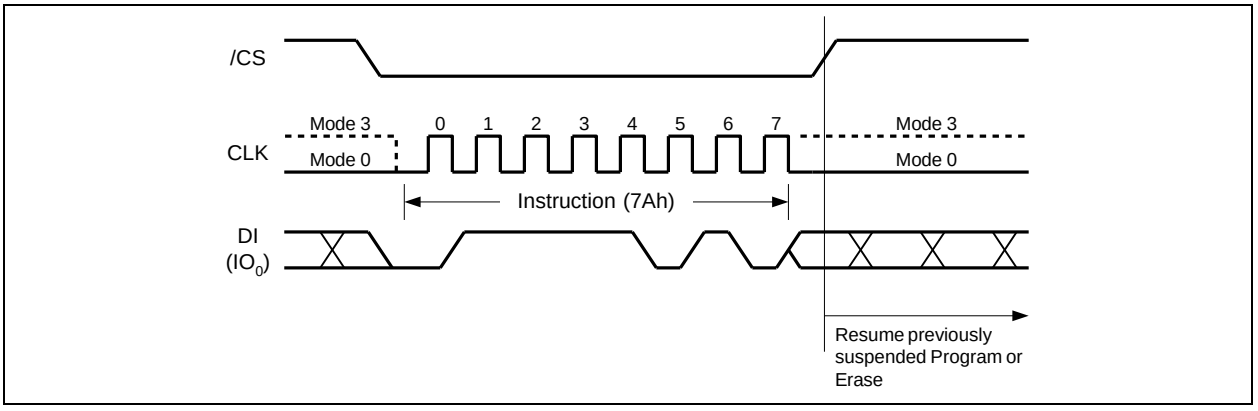

Figure 41. Erase/Program Resume Instruction

8.2.38 Read Device ID (ABh)

The Read Device ID instruction is used to obtain the Device ID for individual die. The instruction is initiated by driving the /CS pin low and shifting the instruction code “ABh” followed by 3-dummy bytes. The Device ID bits are then shifted out on the falling edge of CLK with most significant bit (MSB) first. The Device ID value for individual die stacked in W25M512JV is listed in the Manufacturer and Device Identification table. The Device ID can be read continuously. The instruction is completed by driving /CS high.

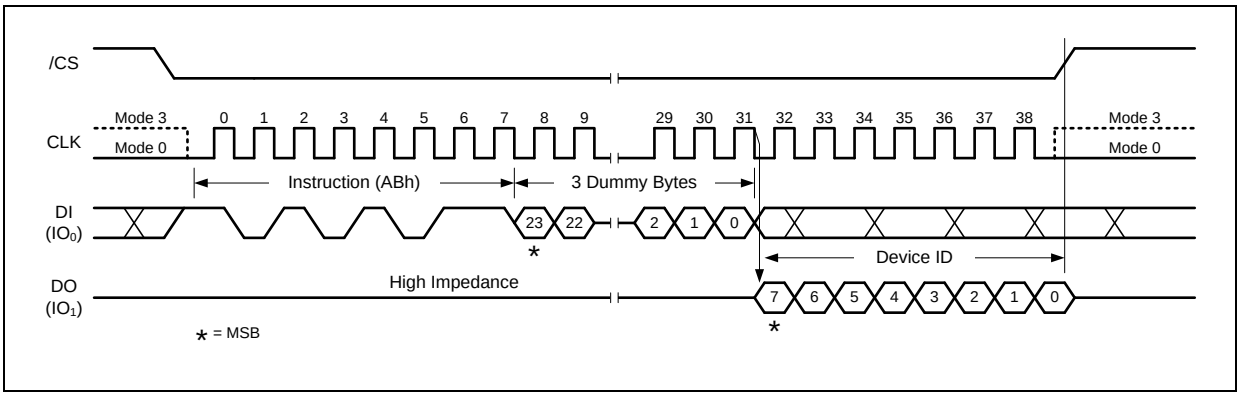

Figure 42. Read Device ID Instruction

8.2.39 Read Manufacturer / Device ID (90h)

The Read Manufacturer/Device ID instruction is an alternative to the Read Device ID instruction that provides both the JEDEC assigned manufacturer ID and the specific device ID.

The Read Manufacturer/Device ID instruction is very similar to the Read Device ID instruction. The instruction is initiated by driving the /CS pin low and shifting the instruction code “90h” followed by a 24-bit address (A23-A0) of 000000h. After which, the Manufacturer ID for Winbond (EFh) and the Device ID are shifted out on the falling edge of CLK with most significant bit (MSB) first as shown in Figure 43. The Device ID value for individual die stacked in W25M512JV is listed in the Manufacturer and Device Identification table. The instruction is completed by driving /CS high.

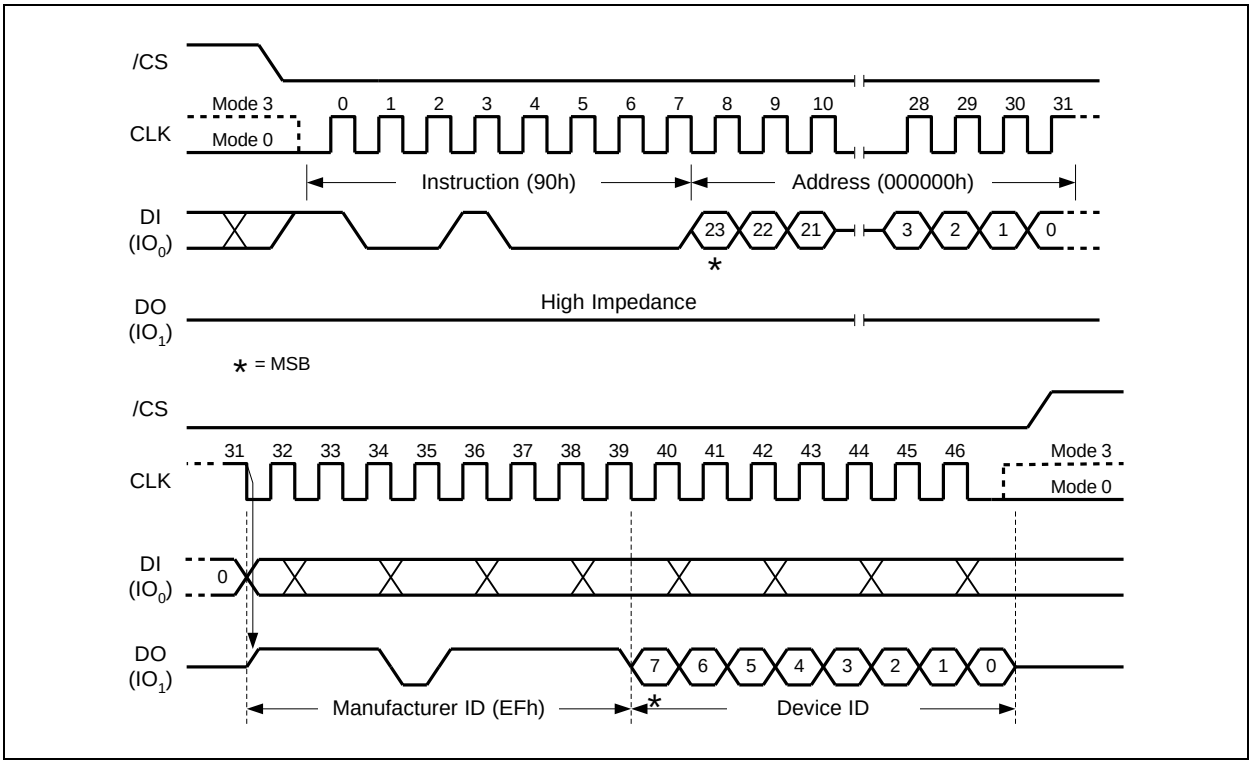

Figure 43. Read Manufacturer / Device ID Instruction

8.2.40 Read Manufacturer / Device ID Dual I/O (92h)

The Read Manufacturer / Device ID Dual I/O instruction is an alternative to the Read Manufacturer / Device ID instruction that provides both the JEDEC assigned manufacturer ID and the specific device ID at 2x speed.

The Read Manufacturer / Device ID Dual I/O instruction is similar to the Fast Read Dual I/O instruction. The instruction is initiated by driving the /CS pin low and shifting the instruction code “92h” followed by a 24/32-bit address (A23/A31-A0) of 000000h, but with the capability to input the Address bits two bits per clock. After which, the Manufacturer ID for Winbond (EFh) and the Device ID are shifted out 2 bits per clock on the falling edge of CLK with most significant bits (MSB) first as shown in Figure 44. The Device ID value for individual die stacked in W25M512JV is listed in the Manufacturer and Device Identification table. If the 24-bit address is initially set to 000001h the Device ID will be read first and then followed by the Manufacturer ID. The Manufacturer and Device IDs can be read continuously, alternating from one to the other. The instruction is completed by driving /CS high.

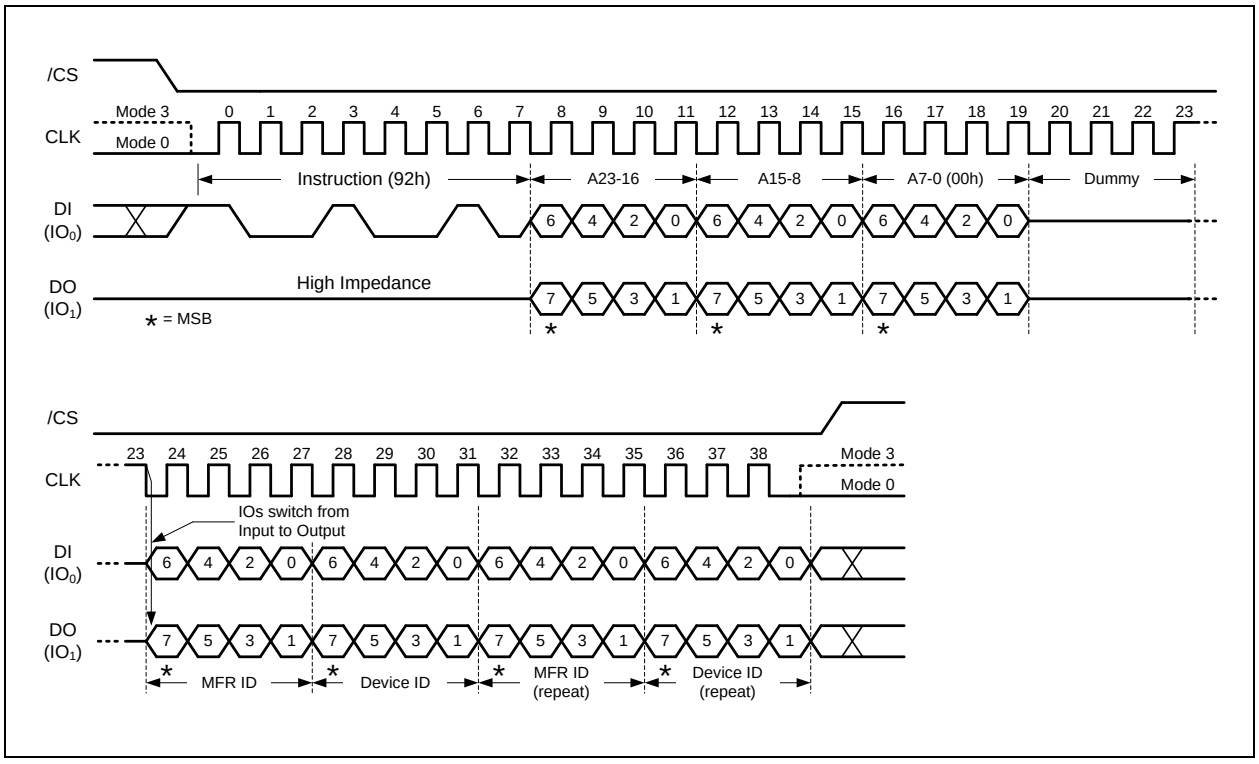

Figure 44. Read Manufacturer / Device ID Dual I/O Instruction

32-Bit Address is required when the device is operating in 4-Byte Address Mode

8.2.41 Read Manufacturer / Device ID Quad I/O (94h)

The Read Manufacturer / Device ID Quad I/O instruction is an alternative to the Read Manufacturer / Device ID instruction that provides both the JEDEC assigned manufacturer ID and the specific device ID at 4x speed.

The Read Manufacturer / Device ID Quad I/O instruction is similar to the Fast Read Quad I/O instruction. The instruction is initiated by driving the /CS pin low and shifting the instruction code “94h” followed by a four clock dummy cycles and then a 24/32-bit address (A23/A31-A0) of 000000h, but with the capability to input the Address bits four bits per clock. After which, the Manufacturer ID for Winbond (EFh) and the Device ID are shifted out four bits per clock on the falling edge of CLK with most significant bit (MSB) first as shown in Figure 45. The Device ID value for individual die stacked in W25M512JV is listed in the Manufacturer and Device Identification table. If the 24-bit address is initially set to 000001h the Device ID will be read first and then followed by the Manufacturer ID. The Manufacturer and Device IDs can be read continuously, alternating from one to the other. The instruction is completed by driving /CS high.

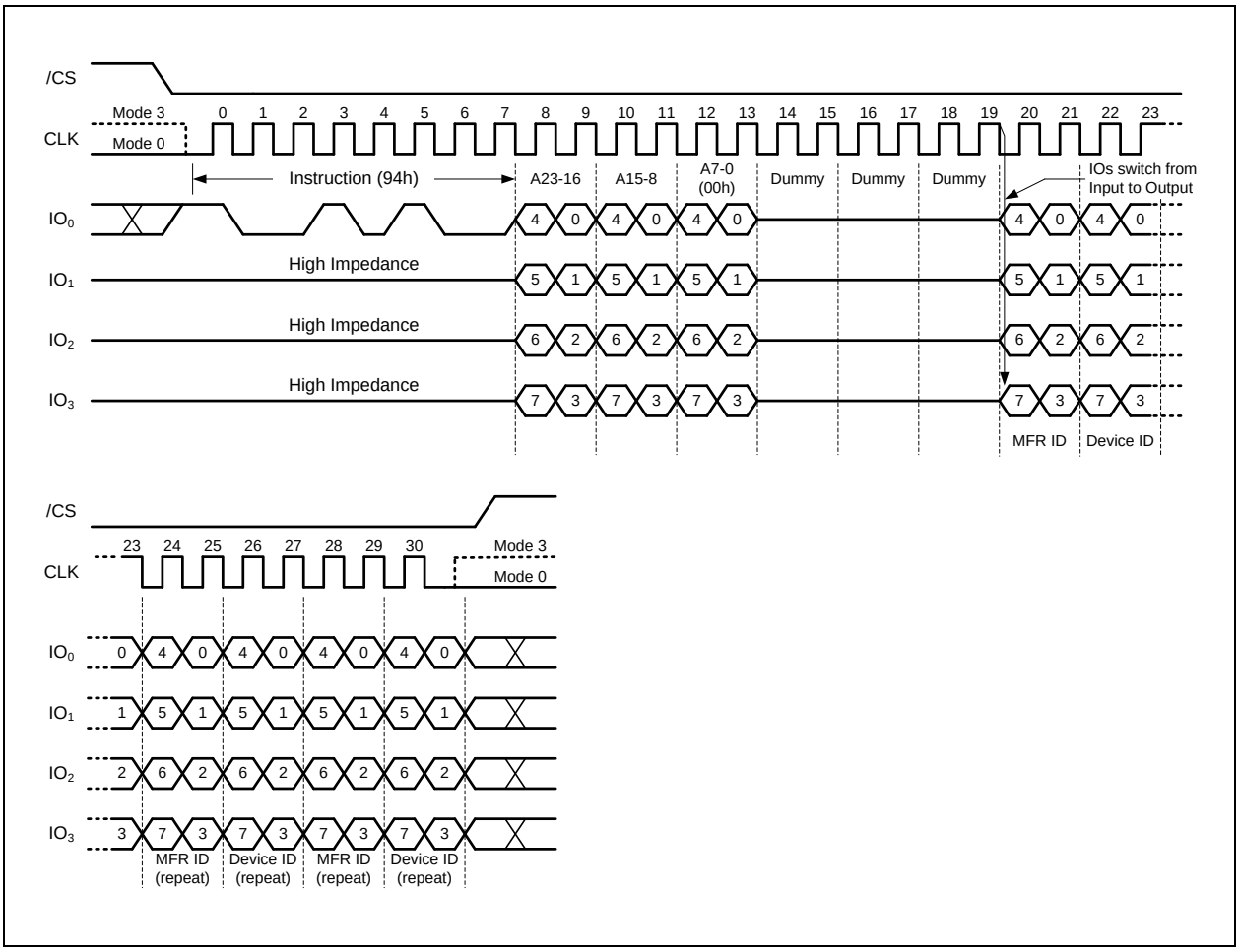

Figure 45. Read Manufacturer / Device ID Quad I/O Instruction

32-Bit Address is required when the device is operating in 4-Byte Address Mode

8.2.42 Read Unique ID Number (4Bh)

The Read Unique ID Number instruction accesses a factory-set read-only 64-bit number that is unique to each individual die stacked in the W25M512JV package. The ID number can be used in conjunction with user software methods to help prevent copying or cloning of a system. The Read Unique ID instruction is initiated by driving the /CS pin low and shifting the instruction code “4Bh” followed by a four bytes of dummy clocks. After which, the 64-bit ID is shifted out on the falling edge of CLK as shown in Figure 46.

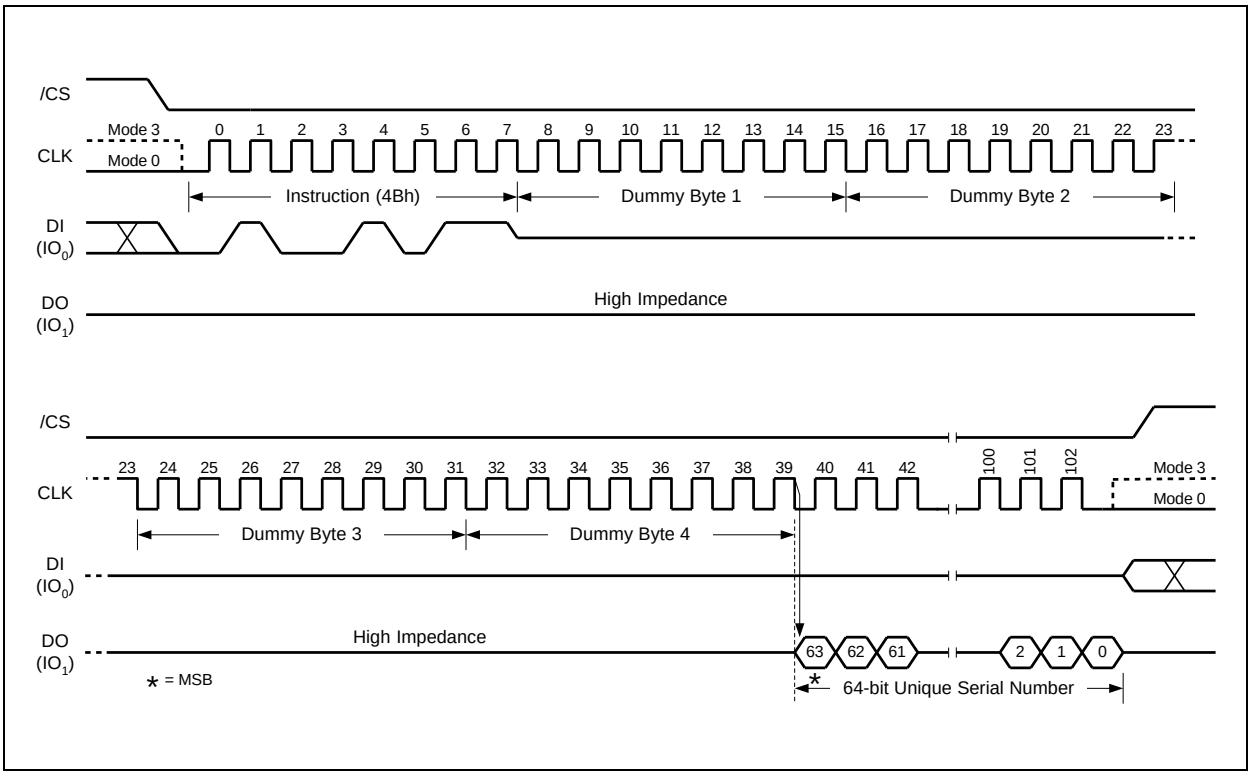

Figure 46. Read Unique ID Number Instruction

5 Dummy Bytes are required when the device is operating in 4-Byte Address Mode

8.2.43 Read JEDEC ID (9Fh)

For compatibility reasons, the W25M512JV provides several instructions to electronically determine the identity of the device. The Read JEDEC ID instruction is compatible with the JEDEC standard for SPI compatible serial memories that was adopted in 2003. The instruction is initiated by driving the /CS pin low and shifting the instruction code “9Fh”. The JEDEC assigned Manufacturer ID byte for Winbond (EFh) and two Device ID bytes, Memory Type (ID15-ID8) and Capacity (ID7-ID0) are then shifted out on the falling edge of CLK with most significant bit (MSB) first as shown in Figure 47. For memory type and capacity values refer to Manufacturer and Device Identification table.

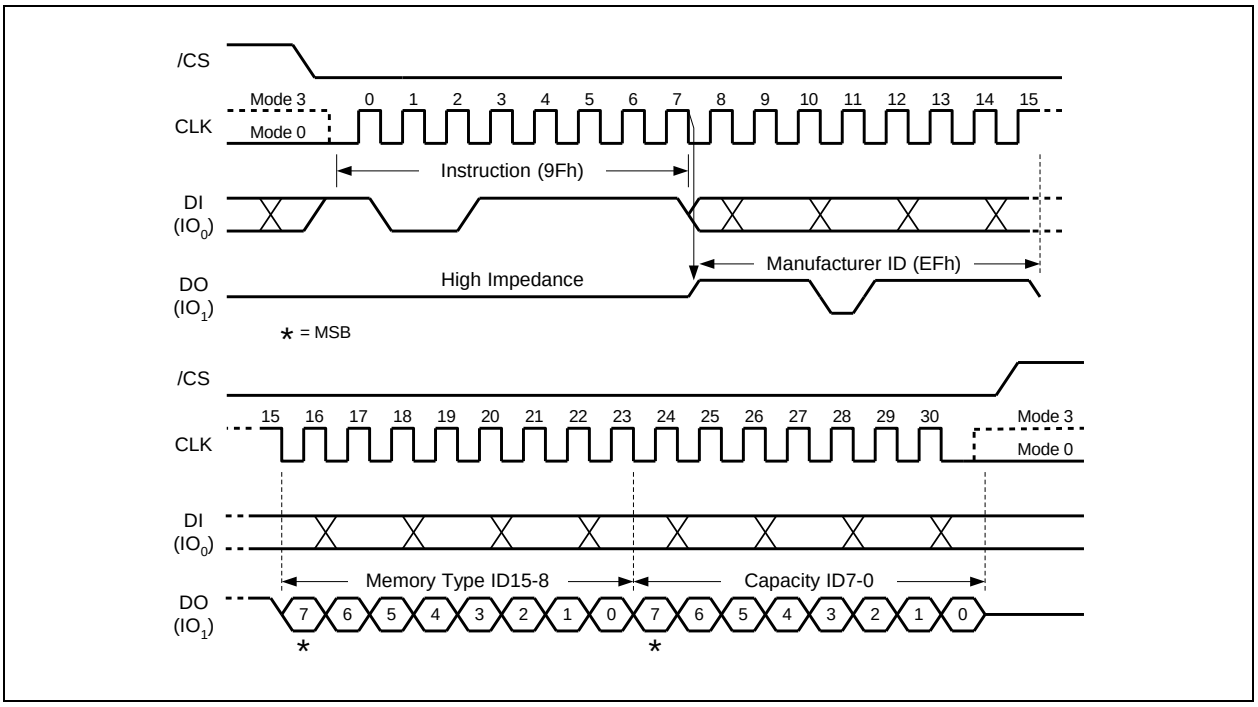

Figure 47. Read JEDEC ID Instruction

8.2.44 Read SFDP Register (5Ah)

The W25M512JV features a 256-Byte Serial Flash Discoverable Parameter (SFDP) register that contains information about device configurations, available instructions and other features. The SFDP parameters are stored in one or more Parameter Identification (PID) tables. Currently only one PID table is specified, but more may be added in the future. The Read SFDP Register instruction is compatible with the SFDP standard initially established in 2010 for PC and other applications, as well as the JEDEC standard JESD216 that is published in 2011. Most Winbond SpiFlash Memories shipped after June 2011 (date code 1124 and beyond) support the SFDP feature as specified in the applicable datasheet.

The Read SFDP instruction is initiated by driving the /CS pin low and shifting the instruction code "5Ah" followed by a 24-bit address (A23-A0)(1) into the DI pin. Eight "dummy" clocks are also required before the SFDP register contents are shifted out on the falling edge of the 40th CLK with most significant bit (MSB) first as shown in Figure 48. For SFDP register values and descriptions, please refer to the Winbond Application Note for SFDP Definition Table.

Note: 1. A23-A8 = 0; A7-A0 are used to define the starting byte address for the 256-Byte SFDP Register.

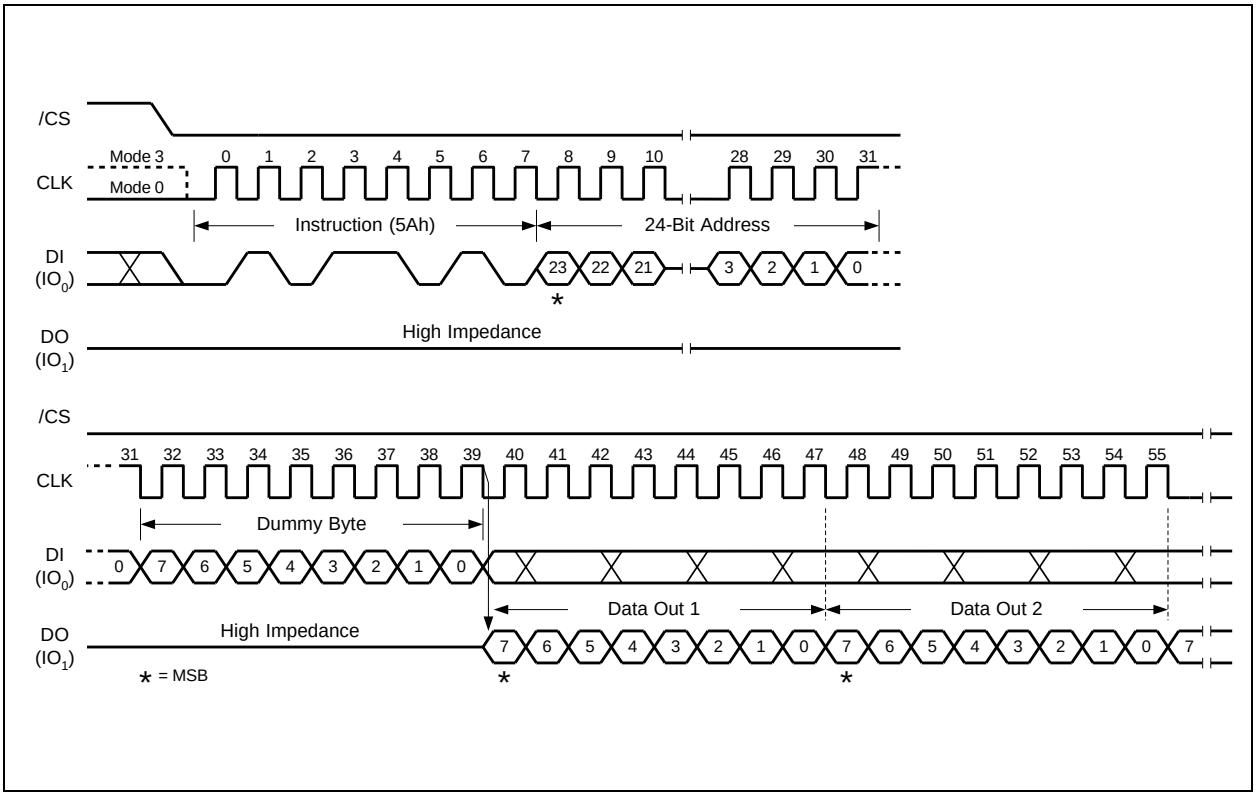

Figure 48. Read SFDP Register Instruction

Only 24-Bit Address is required when the device is operating in either 3-Byte or 4-Byte Address Mode

8.2.45 Erase Security Registers (44h)

The W25M512JV offers three 256-byte Security Registers which can be erased and programmed individually. These registers may be used by the system manufacturers to store security and other important information separately from the main memory array.

The Erase Security Register instruction is similar to the Sector Erase instruction. A Write Enable instruction must be executed before the device will accept the Erase Security Register Instruction (Status Register bit WEL must equal 1). The instruction is initiated by driving the /CS pin low and shifting the instruction code "44h" followed by a 24/32-bit address (A23/A31-A0) to erase one of the three security registers.

ADDRESS	A23/A31-16	A15-12	A11-8	A7-0
Security Register #1	00h/0000h	0 0 0 1	0 0 0 0	Don't Care
Security Register #2	00h/0000h	0 0 1 0	0 0 0 0	Don't Care
Security Register #3	00h/0000h	0 0 1 1	0 0 0 0	Don't Care

The Erase Security Register instruction sequence is shown in Figure 49. The /CS pin must be driven high after the eighth bit of the last byte has been latched. If this is not done the instruction will not be executed. After /CS is driven high, the self-timed Erase Security Register operation will commence for a time duration of tSE (See AC Characteristics). While the Erase Security Register cycle is in progress, the Read Status Register instruction may still be accessed for checking the status of the BUSY bit. The BUSY bit is a 1 during the erase cycle and becomes a 0 when the cycle is finished and the device is ready to accept other instructions again. After the Erase Security Register cycle has finished the Write Enable Latch (WEL) bit in the Status Register is cleared to 0. The Security Register Lock Bits (LB3-1) in the Status Register-2 can be used to OTP protect the security registers. Once a lock bit is set to 1, the corresponding security register will be permanently locked, Erase Security Register instruction to that register will be ignored (Refer to section 7.1.8 for detail descriptions).

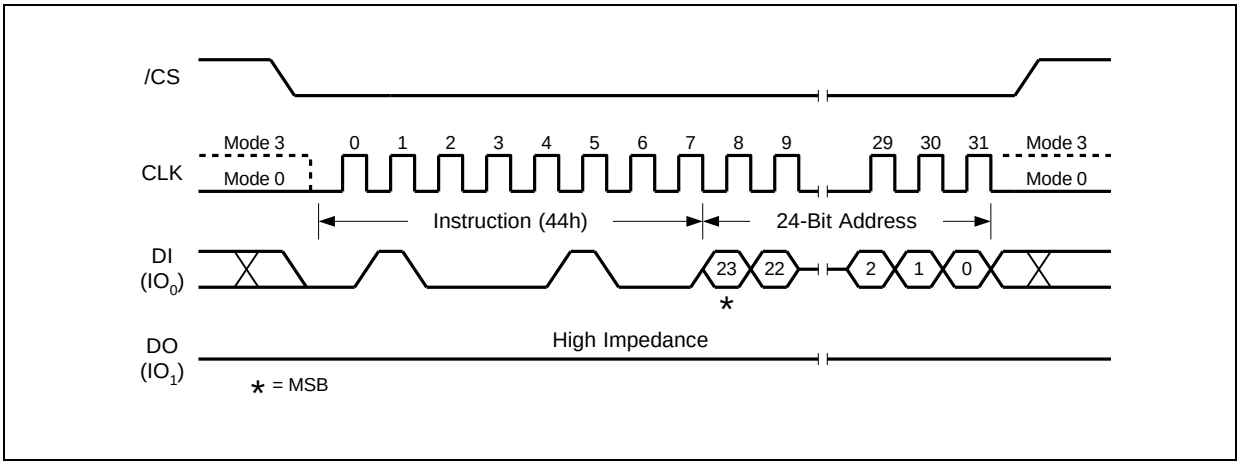

Figure 49. Erase Security Registers Instruction

32-Bit Address is required when the device is operating in 4-Byte Address Mode

8.2.46 Program Security Registers (42h)

The Program Security Register instruction is similar to the Page Program instruction. It allows from one byte to 256 bytes of security register data to be programmed at previously erased (FFh) memory locations. A Write Enable instruction must be executed before the device will accept the Program Security Register Instruction (Status Register bit WEL= 1). The instruction is initiated by driving the /CS pin low then shifting the instruction code "42h" followed by a 24/32-bit address (A23/A31-A0) and at least one data byte, into the DI pin. The /CS pin must be held low for the entire length of the instruction while data is being sent to the device.

ADDRESS	A23/A31-16	A15-12	A11-8	A7-0
Security Register #1	00h/0000h	0 0 0 1	0 0 0 0	Byte Address
Security Register #2	00h/0000h	0 0 1 0	0 0 0 0	Byte Address
Security Register #3	00h/0000h	0 0 1 1	0 0 0 0	Byte Address

The Program Security Register instruction sequence is shown in Figure 50. The Security Register Lock Bits (LB3-1) in the Status Register-2 can be used to OTP protect the security registers. Once a lock bit is set to 1, the corresponding security register will be permanently locked, Program Security Register instruction to that register will be ignored (See 7.1.8, 8.2.27 for detail descriptions).

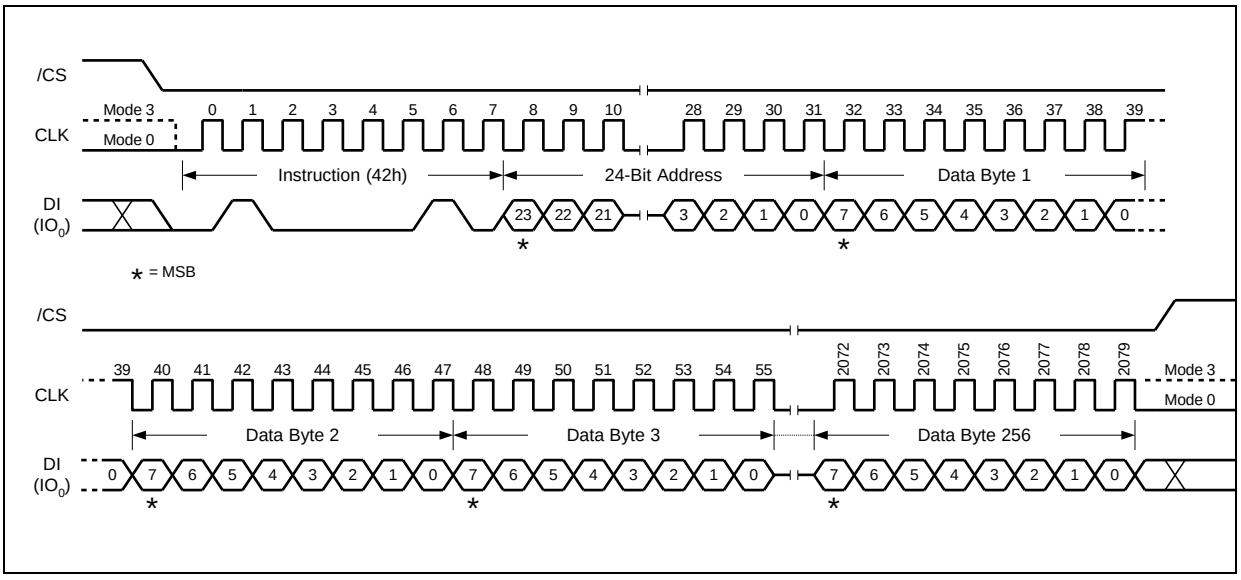

Figure 50. Program Security Registers Instruction

32-Bit Address is required when the device is operating in 4-Byte Address Mode

8.2.47 Read Security Registers (48h)

The Read Security Register instruction is similar to the Fast Read instruction and allows one or more data bytes to be sequentially read from one of the four security registers. The instruction is initiated by driving the /CS pin low and then shifting the instruction code “48h” followed by a 24/32-bit address (A23/A31-A0) and eight “dummy” clocks into the DI pin. The code and address bits are latched on the rising edge of the CLK pin. After the address is received, the data byte of the addressed memory location will be shifted out on the DO pin at the falling edge of CLK with most significant bit (MSB) first. The byte address is automatically incremented to the next byte address after each byte of data is shifted out. Once the byte address reaches the last byte of the register (byte address FFh), it will reset to address 00h, the first byte of the register, and continue to increment. The instruction is completed by driving /CS high. The Read Security Register instruction sequence is shown in Figure 51. If a Read Security Register instruction is issued while an Erase, Program or Write cycle is in process (BUSY=1) the instruction is ignored and will not have any effects on the current cycle. The Read Security Register instruction allows clock rates from D.C. to a maximum of FR (see AC Electrical Characteristics).

ADDRESS	A23/A31-16	A15-12	A11-8	A7-0
Security Register #1	00h/0000h	0 0 0 1	0 0 0 0	Byte Address
Security Register #2	00h/0000h	0 0 1 0	0 0 0 0	Byte Address
Security Register #3	00h/0000h	0 0 1 1	0 0 0 0	Byte Address

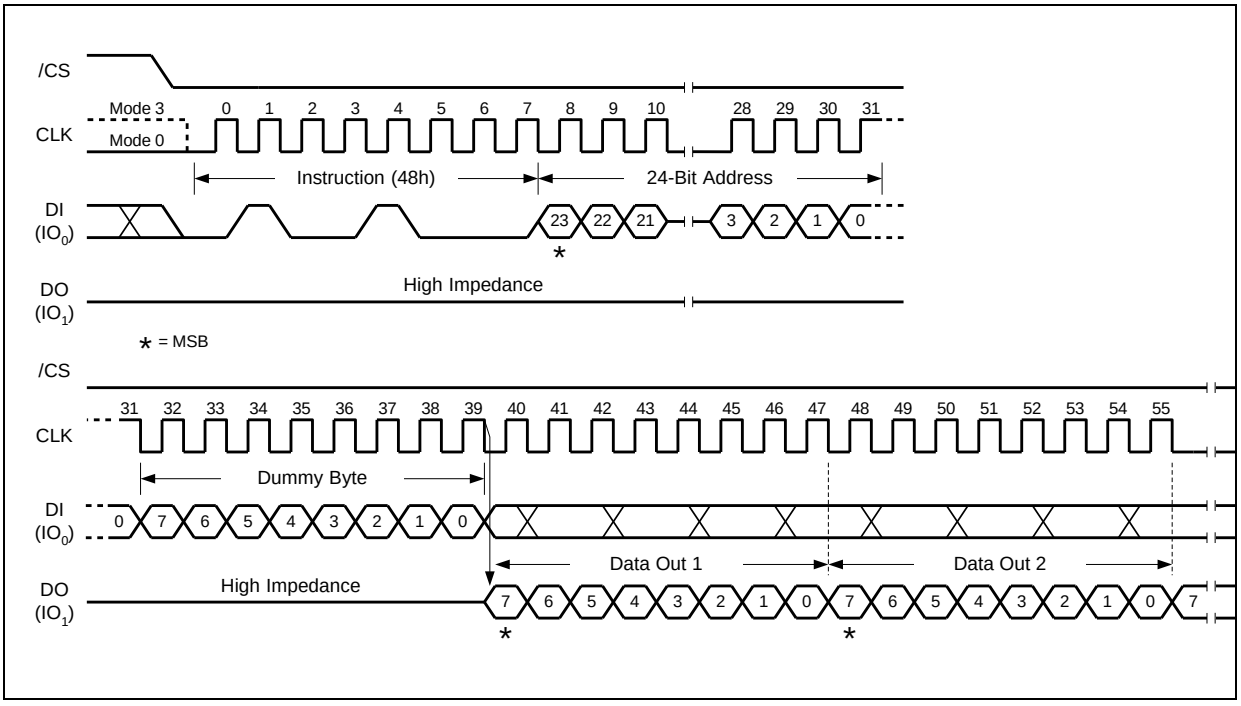

Figure 51. Read Security Registers Instruction

32-Bit Address is required when the device is operating in 4-Byte Address Mode

8.2.48 Individual Block/Sector Lock (36h)

The Individual Block/Sector Lock provides an alternative way to protect the memory array from adverse Erase/Program. In order to use the Individual Block/Sector Locks, the WPS bit in Status Register-3 must be set to 1. If WPS=0, the write protection will be determined by the combination of CMP, TB, BP[3:0] bits in the Status Registers. The Individual Block/Sector Lock bits are volatile bits. The default values after device power up or after a Reset are 1, so the entire memory array is being protected.

To lock a specific block or sector as illustrated in Figure 52, an Individual Block/Sector Lock instruction must be issued by driving /CS low, shifting the instruction code “36h” into the Data Input (DI) pin on the rising edge of CLK, followed by a 24/32-bit address and then driving /CS high.

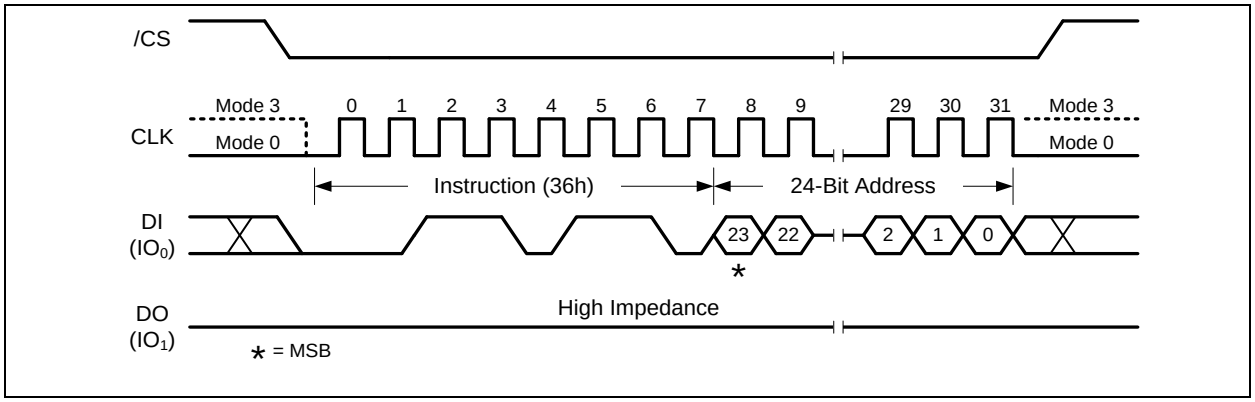

Figure 52. Individual Block/Sector Lock Instruction

32-Bit Address is required when the device is operating in 4-Byte Address Mode

8.2.49 Individual Block/Sector Unlock (39h)

The Individual Block/Sector Lock provides an alternative way to protect the memory array from adverse Erase/Program. In order to use the Individual Block/Sector Locks, the WPS bit in Status Register-3 must be set to 1. If WPS=0, the write protection will be determined by the combination of CMP, TB, BP[3:0] bits in the Status Registers. The Individual Block/Sector Lock bits are volatile bits. The default values after device power up or after a Reset are 1, so the entire memory array is being protected.

To unlock a specific block or sector as illustrated in Figure 53, an Individual Block/Sector Unlock instruction must be issued by driving /CS low, shifting the instruction code “39h” into the Data Input (DI) pin on the rising edge of CLK, followed by a 24/32-bit address and then driving /CS high.

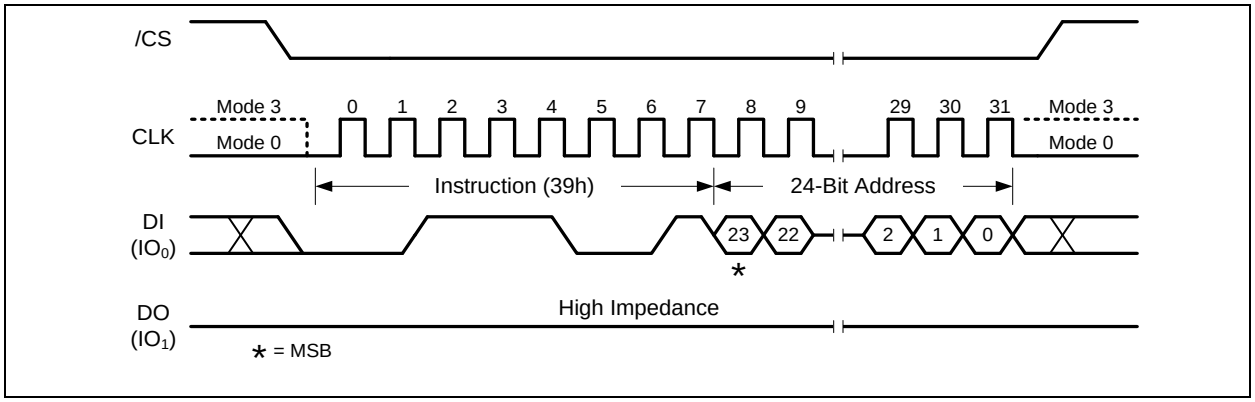

Figure 53. Individual Block Unlock Instruction

32-Bit Address is required when the device is operating in 4-Byte Address Mode

8.2.50 Read Block/Sector Lock (3Dh)

The Individual Block/Sector Lock provides an alternative way to protect the memory array from adverse Erase/Program. In order to use the Individual Block/Sector Locks, the WPS bit in Status Register-3 must be set to 1. If WPS=0, the write protection will be determined by the combination of CMP, TB, BP[3:0] bits in the Status Registers. The Individual Block/Sector Lock bits are volatile bits. The default values after device power up or after a Reset are 1, so the entire memory array is being protected.

To read out the lock bit value of a specific block or sector as illustrated in Figure 54, a Read Block/Sector Lock instruction must be issued by driving /CS low, shifting the instruction code “3Dh” into the Data Input (DI) pin on the rising edge of CLK, followed by a 24/32-bit address. The Block/Sector Lock bit value will be shifted out on the DO pin at the falling edge of CLK with most significant bit (MSB) first. If the least significant bit (LSB) is 1, the corresponding block/sector is locked; if LSB=0, the corresponding block/sector is unlocked, Erase/Program operation can be performed.

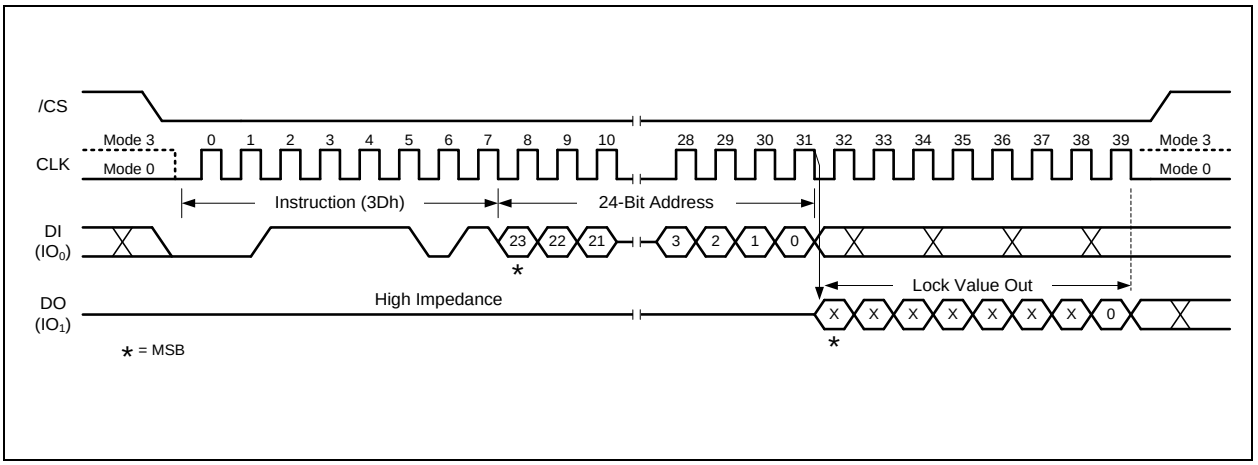

Figure 54. Read Block Lock Instruction

32-Bit Address is required when the device is operating in 4-Byte Address Mode

8.2.51 Global Block/Sector Lock (7Eh)

All Block/Sector Lock bits can be set to 1 by the Global Block/Sector Lock instruction. The instruction must be issued by driving /CS low, shifting the instruction code “7Eh” into the Data Input (DI) pin on the rising edge of CLK, and then driving /CS high.

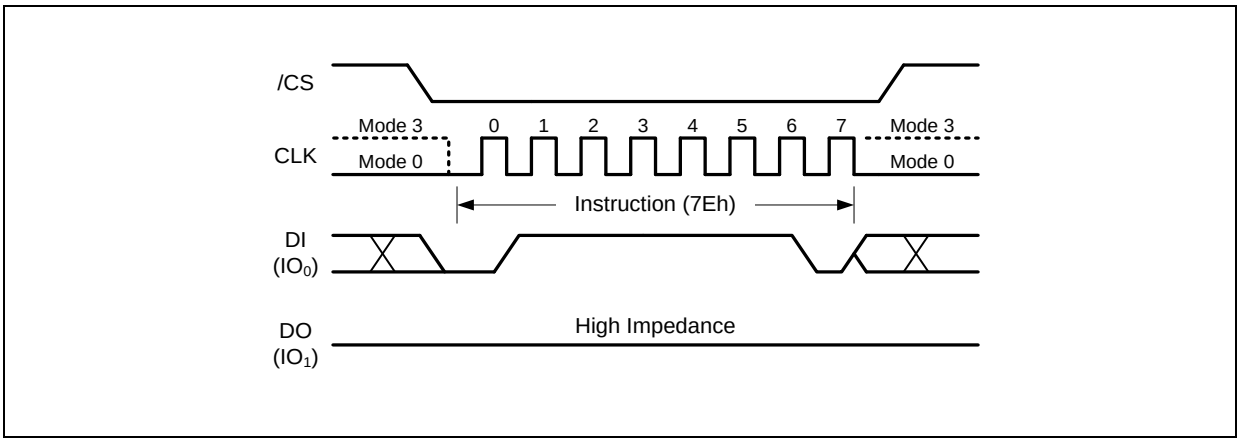

Figure 55. Global Block Lock Instruction

8.2.52 Global Block/Sector Unlock (98h)

All Block/Sector Lock bits can be set to 0 by the Global Block/Sector Unlock instruction. The instruction must be issued by driving /CS low, shifting the instruction code “98h” into the Data Input (DI) pin on the rising edge of CLK, and then driving /CS high.

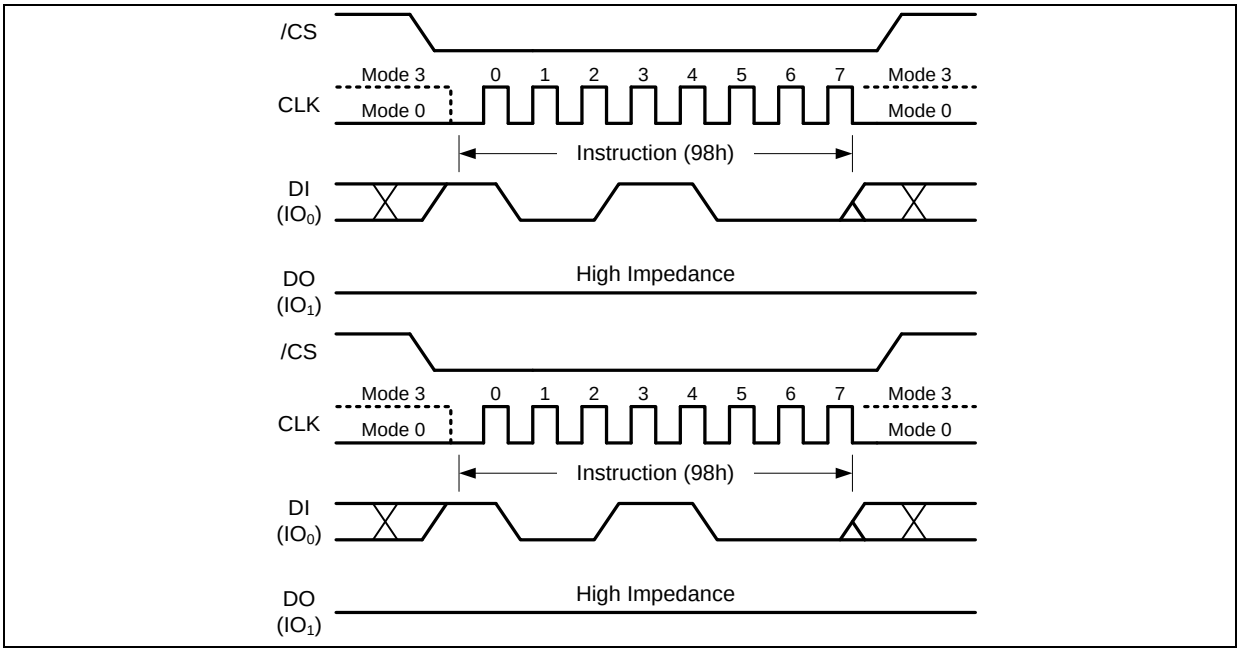

Figure 56. Global Block Unlock Instruction

8.2.53 Enable Reset (66h) and Reset Device (99h)

Because of the small package and the limitation on the number of pins, the W25M512JV provide a software Reset instruction instead of a dedicated RESET pin. Once the Reset instruction is accepted, any on-going internal operations will be terminated and the device will return to its default power-on state and lose all the current volatile settings, such as Active Die status (Die #0 will be active as default after the reset), Volatile Status Register bits, Write Enable Latch (WEL) status, Program/Erase Suspend status, Read parameter setting (P7-P0), and Wrap Bit setting (W6-W4).

“Enable Reset (66h)” and “Reset (99h)” instructions must be issued in sequence to avoid accidental reset. Any other instructions other than “Reset (99h)” after the “Enable Reset (66h)” instruction will disable the “Reset Enable” state. A new sequence of “Enable Reset (66h)” and “Reset (99h)” is needed to reset the device. Once the Reset instruction is accepted by the device, the device will take approximately tRST=30us to reset. During this period, no instruction will be accepted.

Data corruption may happen if there is an on-going or suspended internal Erase or Program operation when Reset instruction sequence is accepted by the device. It is recommended to check the BUSY bit and the SUS bit in Status Register before issuing the Reset instruction sequence.

Each individual die stacked in the W25M512JV, regardless its Active or Idle status, will accept the Software Reset sequence and perform the internal reset respectively.

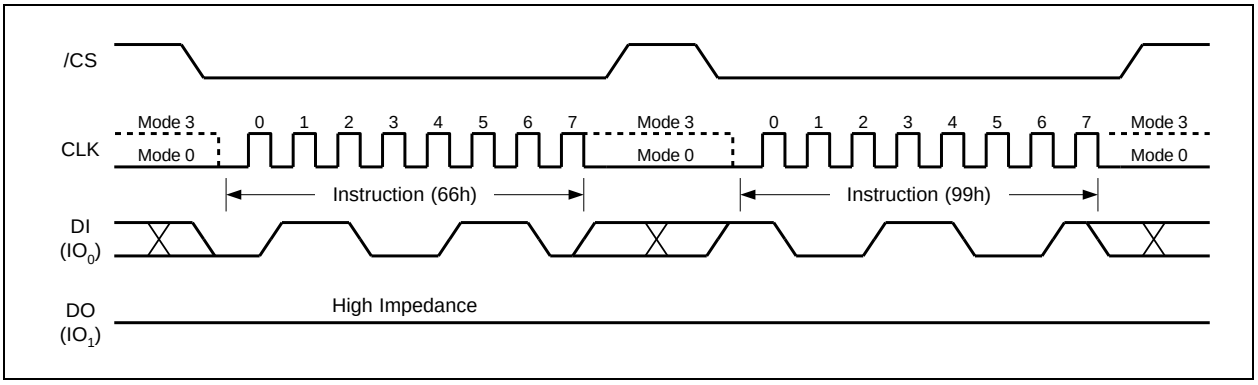

Figure 57. Enable Reset and Reset Instruction Sequence

9. ELECTRICAL CHARACTERISTICS

9.1 Absolute Maximum Ratings (1)

PARAMETERS	SYMBOL	CONDITIONS	RANGE	UNIT
Supply Voltage	VCC		–0.6 to +4.6	V
Voltage Applied to Any Pin	V_{IO}	Relative to Ground	–0.6 to VCC+0.4	V
Transient Voltage on any Pin	V_{IOT}	<20nS Transient Relative to Ground	–2.0 to VCC+2.0	V
Storage Temperature	T_{STG}		–65 to +150	°C
Lead Temperature	T_{LEAD}		See Note (2)	°C
Electrostatic Discharge Voltage	V_{ESD}	Human Body Model(3)	–2000 to +2000	V

Notes:

1. This device has been designed and tested for the specified operation ranges. Proper operation outside of these levels is not guaranteed. Exposure to absolute maximum ratings may affect device reliability. Exposure beyond absolute maximum ratings may cause permanent damage.
2. Compliant with JEDEC Standard J-STD-20C for small body Sn-Pb or Pb-free (Green) assembly and the European directive on restrictions on hazardous substances (RoHS) 2002/95/EU.
3. JEDEC Std JESD22-A114A (C1=100pF, R1=1500 ohms, R2=500 ohms).

9.2 Operating Ranges

PARAMETER	SYMBOL	CONDITIONS	SPEC		UNIT
			MIN	MAX	
Supply Voltage	VCC	F_R = 104MHz, f_R = 50MHz	2.7	3.6	V
Ambient Temperature, Operating	T_A	Industrial	–40	+85	°C

9.3 Power-up Power-down Timing and Requirements

PARAMETER	SYMBOL	SPEC		UNIT
		MIN	MAX	
VCC (min) to /CS Low	t_{VSL}(1)	20		µs
Time Delay Before Write Instruction	t_{PUW}(1)	5		ms
Write Inhibit Threshold Voltage	V_{WI}(1)	1.0	2.0	V

Note:

1. These parameters are characterized only.

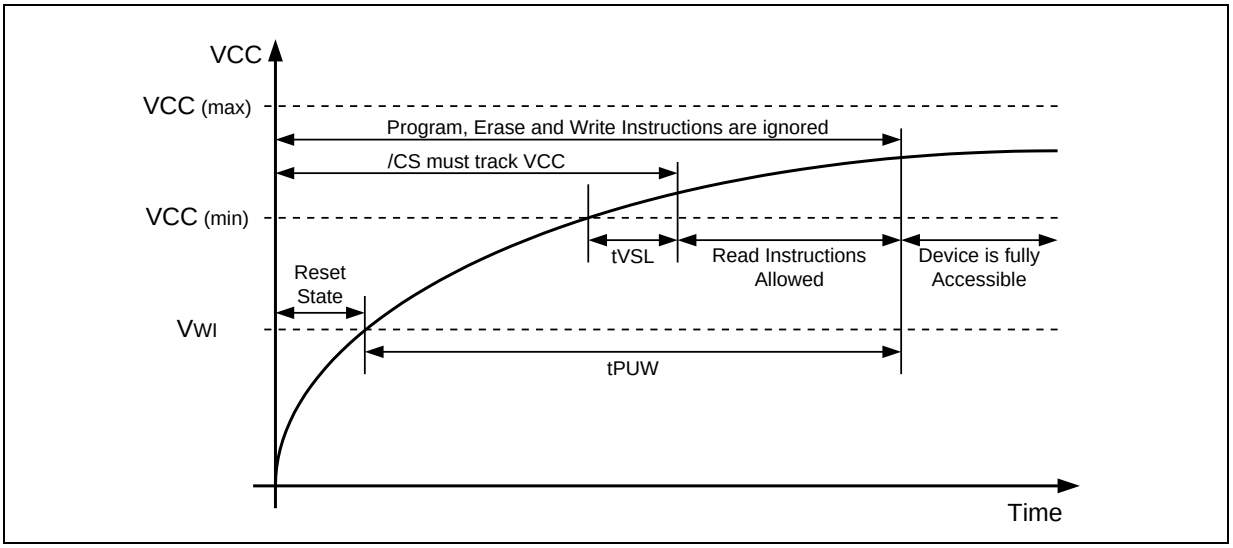

Figure 58a. Power-up Timing and Voltage Levels

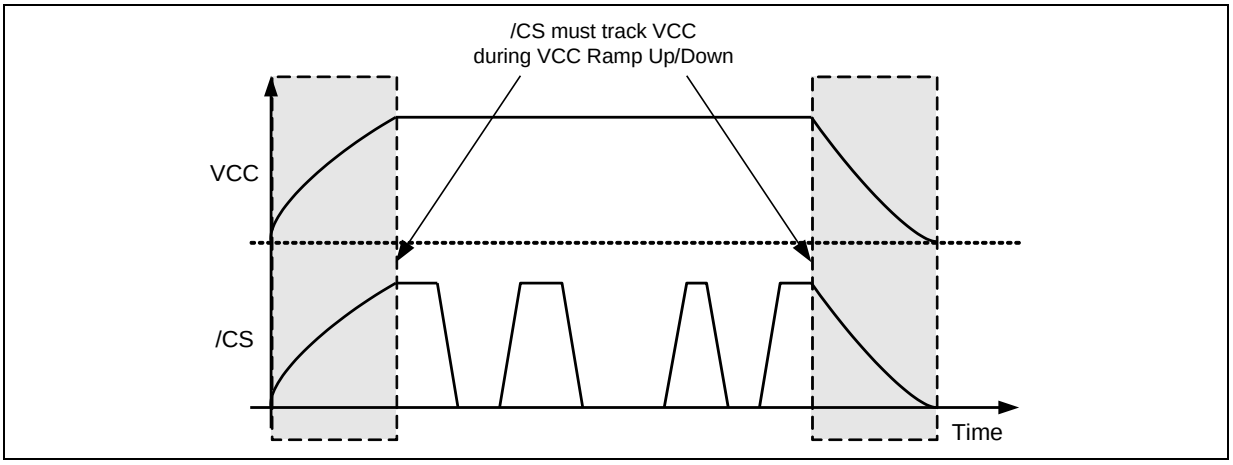

Figure 58b. Power-up, Power-Down Requirement

9.4 DC Electrical Characteristics[1]

PARAMETER	SYMBOL	CONDITIONS	SPEC			UNIT
			MIN	TYP	MAX	
Input Capacitance	C_{IN}	V_{IN} = 0V			6	pF
Output Capacitance	Cout	V_{OUT} = 0V			8	pF
Input Leakage	I_{LI}				±4	µA
I/O Leakage	I_{LO}				±4	µA
Standby Current	I_{CC1}	/CS = VCC, VIN = GND or VCC		20	120	µA
Current Read Data / Dual /Quad 50MHz[2]	I_{CC3}	C = 0.1 VCC / 0.9 VCC DO = Open			20	mA
Current Read Data / Dual /Quad 80MHz[2]	I_{CC3}	C = 0.1 VCC / 0.9 VCC DO = Open			25	mA
Current Read Data / Dual Output Read/Quad Output Read 104MHz[2]	I_{CC3}	C = 0.1 VCC / 0.9 VCC DO = Open			30	mA
Current Write Status Register	I_{CC4}	/CS = VCC		20	25	mA
Current Page Program	I_{CC5}	/CS = VCC		20	25	mA
Current Sector/Block Erase	I_{CC6}	/CS = VCC		20	25	mA
Current Chip Erase	I_{CC7}	/CS = VCC		20	25	mA
Input Low Voltage	V_{IL}		–0.5		VCC x 0.3	V
Input High Voltage	V_{IH}		VCC x 0.7		VCC + 0.4	V
Output Low Voltage	V_{OL}	I_{OL} = 100 µA			0.2	V
Output High Voltage	V_{OH}	I_{OH} = –100 µA	VCC – 0.2			V

Notes:

1. Tested on sample basis and specified through design and characterization data. TA = 25° C, VCC = 3.0V.
2. Checker Board Pattern.
3. Depending on the specific concurrent operations, such as “Read while Program/Erase”, “Multi-die Program/Erase”.

9.5 AC Measurement Conditions

PARAMETER	SYMBOL	SPEC		UNIT
		MIN	MAX	
Load Capacitance	C_L		30	pF
Input Rise and Fall Times	T_R, T_F		5	ns
Input Pulse Voltages	V_{IN}	0.1 VCC to 0.9 VCC		V
Input Timing Reference Voltages	IN	0.3 VCC to 0.7 VCC		V
Output Timing Reference Voltages	OUT	0.5 VCC to 0.5 VCC		V

Note:

1. Output Hi-Z is defined as the point where data out is no longer driven.

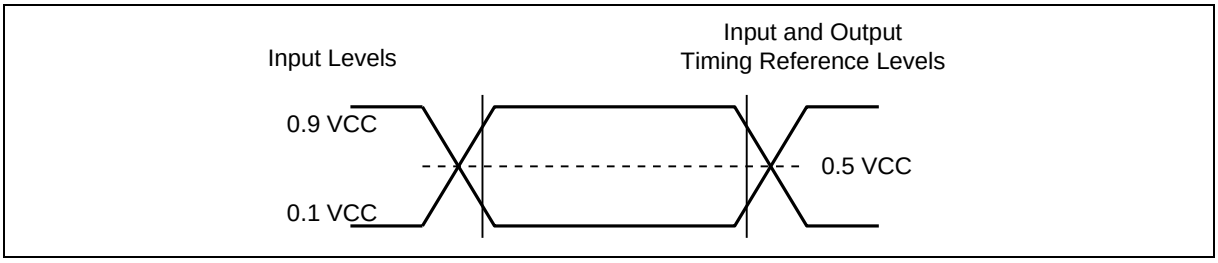

Figure 59. AC Measurement I/O Waveform

9.6 AC Electrical Characteristics(4,5)

DESCRIPTION	SYMBOL	ALT	SPEC			UNIT
			MIN	TYP	MAX	
Clock frequency for all other instructions	F_R	f_{C1}	D.C.		104	MHz
Clock frequency for Read Data instruction (03h)	f_R		D.C.		50	MHz
Clock High, Low Time for all instructions except for Read Data (03h)	t_{CLH}, t_{CLL}(1)		4			ns
Clock High, Low Time for Read Data (03h) instruction	t_{CRLH}, t_{CRLL}(1)		8			ns
Clock Rise Time peak to peak	t_{CLCH}(2)		0.1			V/ns
Clock Fall Time peak to peak	t_{CHCL}(2)		0.1			V/ns
/CS Active Setup Time relative to CLK	t_{SLCH}	t_{CSS}	5			ns
/CS Not Active Hold Time relative to CLK	t_{CHSL}		5			ns
Data In Setup Time	t_{DVCH}	t_{DSU}	2			ns
Data In Hold Time	t_{CHDX}	t_{DH}	3			ns
/CS Active Hold Time relative to CLK	t_{CHSH}		3			ns
/CS Not Active Setup Time relative to CLK	t_{SHCH}		3			ns
/CS Deselect Time (During Read)	t_{SHSL1}	t_{CSH}	10			ns
/CS Deselect Time (During Erase or Program or Write)	t_{SHSL2}	t_{CSH}	50			ns
Output Disable Time	t_{SHQZ}(2)	t_{DIS}			7	ns
Clock Low to Output Valid	t_{CLQV}	t_V			7	ns
Output Hold Time	t_{CLQX}	t_{HO}	1.5			ns

Continued – next page

AC Electrical Characteristics (cont'd)

DESCRIPTION	SYMBOL	ALT	SPEC			UNIT
			MIN	TYP	MAX	
/CS High to Standby Mode without ID Read	t_{RES1}(2)				3	µs
/CS High to Standby Mode with ID Read	t_{RES2}(2)				1.8	µs
/CS High to next Instruction after Suspend	t_{SUS}(2)				20	µs
/CS High to next Instruction after Reset	t_{RST}(2)				30	µs
/RESET pin Low period to reset the device	t_{RESET}(2)		1(3)			µs
Write Status Register Time	t_W			10	15	ms
Page Program Time	t_{PP}			0.7	3	ms
Sector Erase Time (4KB)	t_{SE}			50	400	ms
Block Erase Time (32KB)	t_{BE1}			120	1,600	ms
Block Erase Time (64KB)	t_{BE2}			150	2,000	ms
Single Die Erase Time (256Mb) Concurrent Dual-Die Erase Time (2 x 256Mb)	t_{CE}			80	400	s

Notes:

1. Clock high + Clock low must be less than or equal to 1/fC.
2. Value guaranteed by design and/or characterization, not 100% tested in production.
3. It is possible to reset the device with shorter tRESET (as short as a few hundred ns), a 1us minimum is recommended to ensure reliable operation.
4. Tested on sample basis and specified through design and characterization data. TA = 25° C, VCC = 3.0V.
5. 4-bytes address alignment for Quad Read, start address from [A1,A0]=(0,0).

9.7 Serial Output Timing

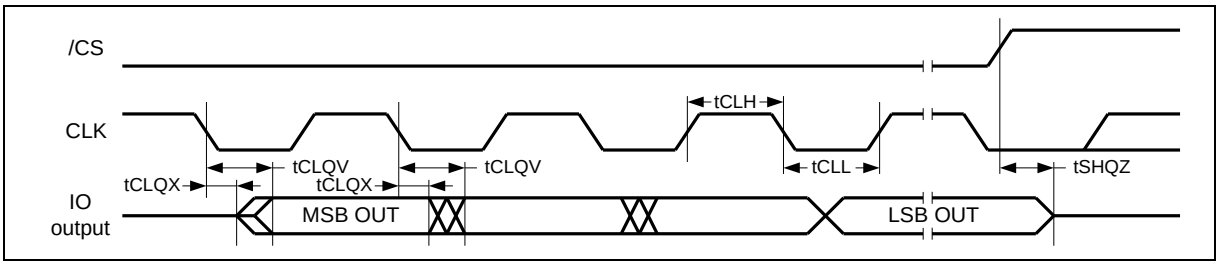

9.8 Serial Input Timing

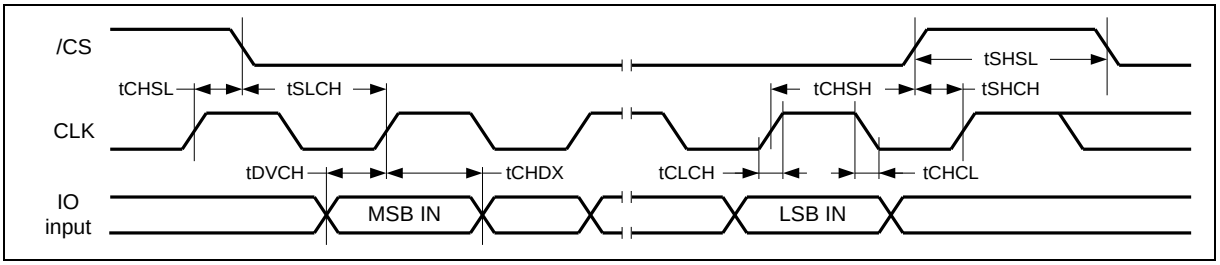

10. PACKAGE SPECIFICATIONS

10.1 8-Pad WSON 8x6-mm (Package Code E)

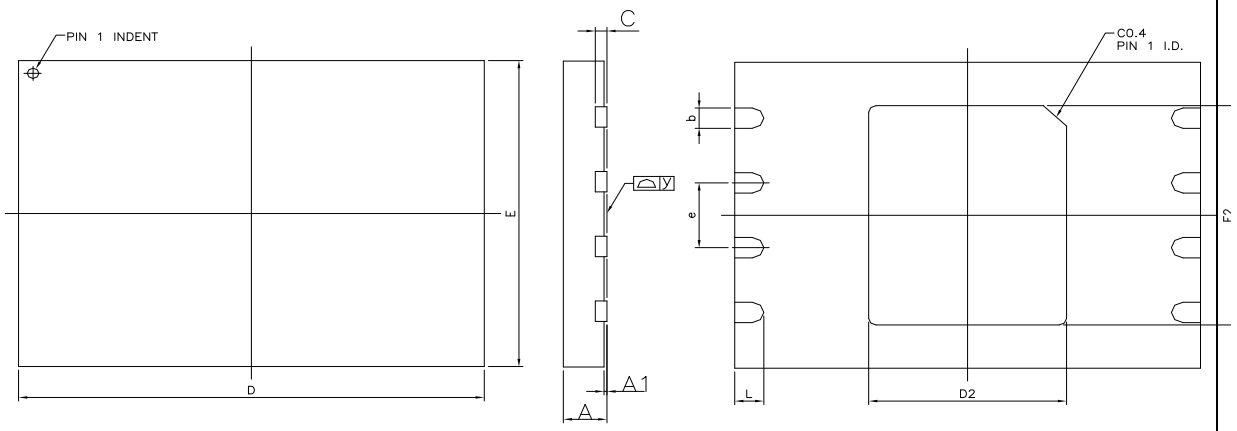

SYMBOL	MILLIMETERS			INCHES		
	Min	Nom	Max	Min	Nom	Max
A	0.70	0.75	0.80	0.028	0.030	0.031
A1	0.00	0.02	0.05	0.000	0.001	0.002
b	0.35	0.40	0.48	0.014	0.016	0.019
C	---	0.20 Ref.	---	---	0.008 Ref.	---
D	7.90	8.00	8.10	0.311	0.315	0.319
D2	3.35	3.40	3.45	0.132	0.134	0.136
E	5.90	6.00	6.10	0.232	0.236	0.240
E2	4.25	4.30	4.35	0.167	0.169	0.171
e	1.27 BSC			0.050 BSC		
L	0.45	0.50	0.55	0.018	0.020	0.022
y	0.00	---	0.05	0.000	---	0.002

10.2 16-Pin SOIC 300-mil (Package Code F)

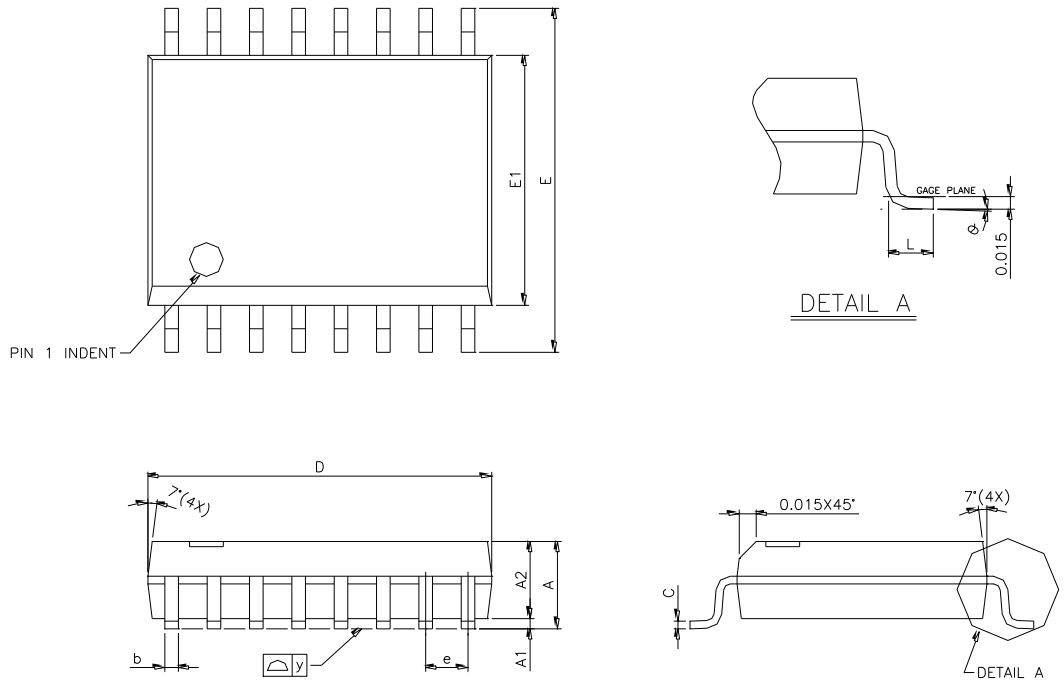

Symbol	Millimeters			Inches		
	Min	Nom	Max	Min	Nom	Max
A	2.36	2.49	2.64	0.093	0.098	0.104
A1	0.10	---	0.30	0.004	---	0.012
A2	---	2.31	---	---	0.091	---
b	0.33	0.41	0.51	0.013	0.016	0.020
C	0.18	0.23	0.28	0.007	0.009	0.011
D	10.08	10.31	10.49	0.397	0.406	0.413
E	10.01	10.31	10.64	0.394	0.406	0.419
E1	7.39	7.49	7.59	0.291	0.295	0.299
e	1.27 BSC			0.050 BSC		
L	0.38	0.81	1.27	0.015	0.032	0.050
y	---	---	0.076	---	---	0.003
θ	0°	---	8°	0°	---	8°

10.3 24-Ball TFBGA 8x6-mm (Package Code B, 5x5-1 Ball Array)

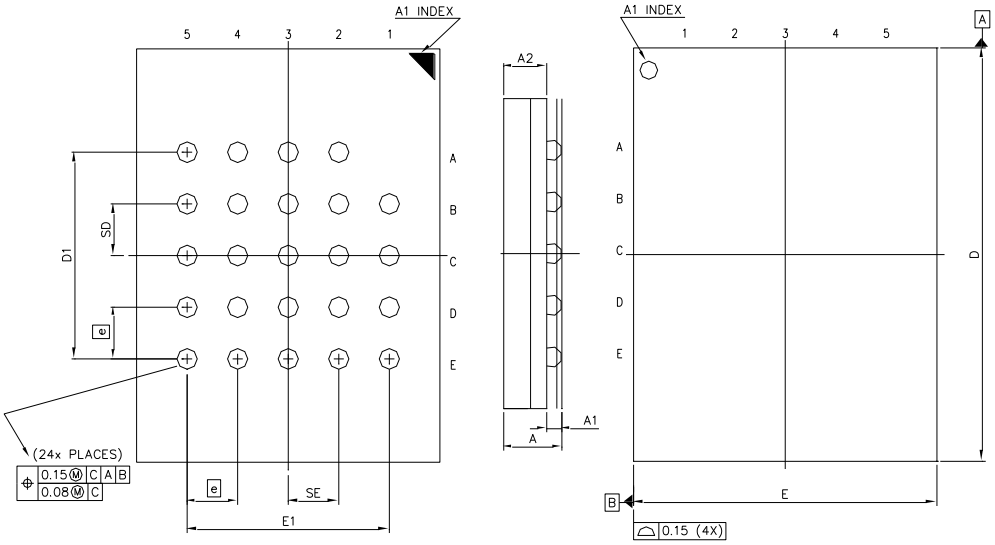

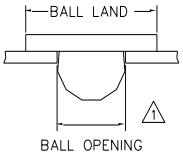

Note:
Ball land: 0.45mm. Ball Opening: 0.35mm
PCB ball land suggested <= 0.35mm

Symbol	Millimeters			Inches		
	Min	Nom	Max	Min	Nom	Max
A	---	---	1.20	---	---	0.047
A1	0.25	0.30	0.35	0.010	0.012	0.014
A2	---	0.85	---	---	0.033	---
b	0.35	0.40	0.45	0.014	0.016	0.018
D	7.90	8.00	8.10	0.311	0.315	0.319
D1	4.00 BSC			0.157 BSC		
E	5.90	6.00	6.10	0.232	0.236	0.240
E1	4.00 BSC			0.157 BSC		
SE	1.00 TYP			0.039 TYP		
SD	1.00 TYP			0.039 TYP		
e	1.00 BSC			0.039 BSC		

10.4 24-Ball TFBGA 8x6-mm (Package Code C, 6x4 Ball Array)

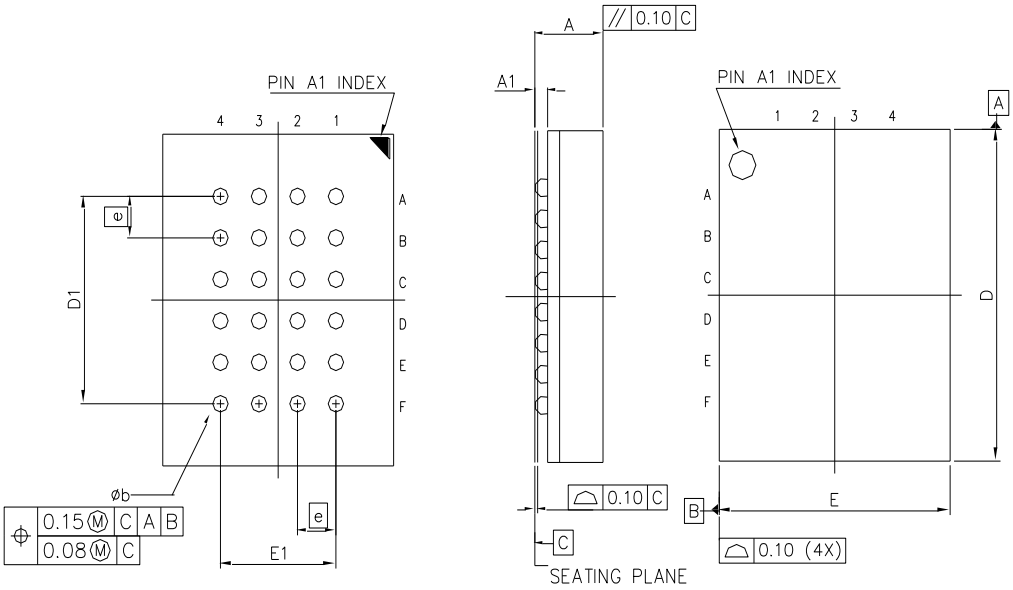

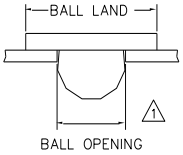

Note:
Ball land: 0.45mm. Ball Opening: 0.35mm
PCB ball land suggested <= 0.35mm

Symbol	Millimeters			Inches		
	Min	Nom	Max	Min	Nom	Max
A	---	---	1.20	---	---	0.047
A1	0.25	0.30	0.35	0.010	0.012	0.014
b	0.35	0.40	0.45	0.014	0.016	0.018
D	7.95	8.00	8.05	0.313	0.315	0.317
D1	5.00 BSC			0.197 BSC		
E	5.95	6.00	6.05	0.234	0.236	0.238
E1	3.00 BSC			0.118 BSC		
e	1.00 BSC			0.039 BSC		

11. ORDERING INFORMATION

W[1] 25M 512J V x I x

Company Prefix

W = Winbond

Product Family

25M = Serial MCP SpiFlash Memory with SpiStack

Product Number / Density

512J = 2 x 256M-bit

Supply Voltage

V = 2.7V to 3.6V

Package Type

F = 16-pin SOIC 300-mil
B = 24-ball TFBGA 8x6-mm (5x5 ball array)
E = 8-pad WSON 8x6mm
C = 24-ball TFBGA 8x6-mm (6x4 ball array)

Temperature Range

I = Industrial (-40°C to +85°C)

Special Options[2,3]

Q = Green Package (Lead-free, RoHS Compliant, Halogen-free (TBBA), Antimony-Oxide-free Sb_2O_3)

Notes:

1. The "W" prefix is not included on the part marking.
2. Standard bulk shipments are in Tube (shape E). Please specify alternate packing method, such as Tape and Reel (shape T) or Tray (shape S), when placing orders.
3. For shipments with special order options, please specify when placing orders.

11.1 Valid Part Numbers and Top Side Marking

The following table provides the valid part numbers for the W25M512JV SpiFlash Memory. Please contact Winbond for specific availability by density and package type. Winbond SpiFlash memories use a 12-digit Product Number for ordering. However, due to limited space, the Top Side Marking on all packages uses an abbreviated 11-digit number.

PACKAGE TYPE	DENSITY	PRODUCT NUMBER	TOP SIDE MARKING
F SOIC-16 300mil	2 x 256M-bit	W25M512JVFIQ	25M512JVFIQ
E WSON-8 8x6mm	2 x 256M-bit	W25M512JVEIQ	25M512JVEIQ
B TFBGA-24 8x6mm (5x5-1 Ball Array)	2 x 256M-bit	W25M512JVBIQ	25M512JVBIQ
C TFBGA-24 8x6mm (6x4 Ball Array)	2 x 256M-bit	W25M512JVCIQ	25M512JVCIQ

12. REVISION HISTORY

VERSION	DATE	PAGE	DESCRIPTION
A	08/16/2014		New Create Preliminary
B	01/04/2017		Removed Preliminary
C	01/06/2017	79, 81	Updated ICC3 & t_{CLQV}
D	09/05/2017	79, 82 82	Removed ICC2 and tDP Added tRES 1/2

Trademarks

Winbond, *SpiFlash and SpiStack* are trademarks of *Winbond Electronics Corporation.*
All other marks are the property of their respective owner.

Important Notice

Winbond products are not designed, intended, authorized or warranted for use as components in systems or equipment intended for surgical implantation, atomic energy control instruments, airplane or spaceship instruments, transportation instruments, traffic signal instruments, combustion control instruments, or for other applications intended to support or sustain life. Furthermore, *Winbond* products are not intended for applications wherein failure of *Winbond* products could result or lead to a situation wherein personal injury, death or severe property or environmental damage could occur. *Winbond* customers using or selling these products for use in such applications do so at their own risk and agree to fully indemnify *Winbond* for any damages resulting from such improper use or sales.

Information in this document is provided solely in connection with Winbond products. Winbond reserves the right to make changes, corrections, modifications or improvements to this document and the products and services described herein at any time, without notice.

Please note that all data and specifications are subject to change without notice.
All the trademarks of products and companies mentioned in this datasheet belong to their respective owners.

Мы молодая и активно развивающаяся компания в области поставок электронных компонентов. Мы поставляем электронные компоненты отечественного и импортного производства напрямую от производителей и с крупнейших складов мира.

Благодаря сотрудничеству с мировыми поставщиками мы осуществляем комплексные и плановые поставки широчайшего спектра электронных компонентов.

Собственная эффективная логистика и склад в обеспечивает надежную поставку продукции в точно указанные сроки по всей России.

Мы осуществляем техническую поддержку нашим клиентам и предпродажную проверку качества продукции. На все поставляемые продукты мы предоставляем гарантию .

Осуществляем поставки продукции под контролем ВП МО РФ на предприятия военно-промышленного комплекса России , а также работаем в рамках 275 ФЗ с открытием отдельных счетов в уполномоченном банке. Система менеджмента качества компании соответствует требованиям ГОСТ ISO 9001.

Минимальные сроки поставки, гибкие цены, неограниченный ассортимент и индивидуальный подход к клиентам являются основой для выстраивания долгосрочного и эффективного сотрудничества с предприятиями радиоэлектронной промышленности, предприятиями ВПК и научно-исследовательскими институтами России.

С нами вы становитесь еще успешнее!

Наши контакты:

Телефон: +7 812 627 14 35

Электронная почта: sales@st-electron.ru

Адрес: 198099, Санкт-Петербург, Промышленная ул, дом № 19, литера Н, помещение 100-Н Офис 331