LTC3875EUJ & LTC3874IUFD
High Efficiency, Single-Output Synchronous Buck Converter with Very Low DCR Inductor

DESCRIPTION

Demonstration circuit 2142A is a high efficiency, high density, 4-phase synchronous buck converter with a 4.5V to 14V input range. It can supply 120A maximum load current at a 1.0V output. This demo board incorporates the LTC3875EUJ and LTC3874IUFD controllers.

The LTC®3875 is a feature-rich dual phase synchronous buck controller with very low DCR current sensing capability, on-chip drivers and remote output voltage sensing. The LTC3874 is a compact dual phase synchronous buck phase extender with very low DCR current sensing capability, on-chip drivers and immediate response to master IC's fault.

This board is setup with 0.32mΩ DCR inductor. The temperature compensation function guarantees accurate current limit over a wide temperature range with DCR sensing. The DC2142 can provide high efficiency, high power density and compact solutions for telecom and datacom systems, industrial and medical instruments, DC power distribution systems and computer systems. The LTC3875 is available in a 40-pin 6mm × 6mm QFN package. The LTC3874 is available in a 28-lead (4mm × 5mm) QFN Package.

To shut down the converter, set the RUN pin voltage below 1.4V (SW1: OFF). Use the JP1 jumper to select burst mode, pulse skipping mode or forced continuous mode operation at light load. Switching frequency is preset at about 400kHz, and it can be easily modified from 250kHz to 770kHz. An on-board dynamic circuit is also available for transient test. The LTC3875 and LTC3874 data sheets give a complete description of these parts, and must be read in conjunction with this DC2142A quick start guide

Design files for this circuit board are available at http://www.linear.com/demo/DC2142A

LT, LTC, LTM, Linear Technology and the Linear logo are registered trademarks of Linear Technology Corporation. All other trademarks are the property of their respective owners.

PERFORMANCE SUMMARY

Specifications are at T_A = 25°C

PARAMETER	CONDITIONS	VALUE
Input Voltage Range		4.5V to 14V
Output Voltage, V_{OUT}	V_{IN} = 4.5V to 14V, I_{OUT1} = 0A to 120A	1.0V ±2%
Maximum Output Current, I_{OUT}	V_{IN} = 4.5V to 14V, V_{OUT1} = 1.0V	120A
Typical Efficiency, V_{OUT}	V_{IN} = 12V, V_{OUT1} = 1.0 V, I_{OUT1} = 120A	87.4%
Typical Switching Frequency		400kHz

QUICK START PROCEDURE

Demonstration circuit 2142A is easy to set up to evaluate the performance of the LTC3875EUJ and LTC3874IUFD. Refer to Figure 1 for the proper measurement equipment setup and follow the procedure below:

1. With power off, connect the input power supply to V_{IN} (4.5V to 14V) and GND (input return).
2. Connect the 1.0V output load between V_{OUT} and GND (Initial load: no-load).
3. Connect the DVMs to the input and outputs. Set default jumper position: JP1: CCM; SW1: ON.
4. Turn on the input power supply and check for the proper output voltages. V_{OUT} should be 1.0V ±2%.
5. Once the proper output voltages are established, adjust the loads within the operating range and observe the output voltage regulation, ripple voltage and other parameters.

Note: When measuring the output or input voltage ripple, do not use the long ground lead on the oscilloscope probe. See Figure 2 for the proper scope probe technique. Short, stiff leads need to be soldered to the (+) and (–) terminals of an output capacitor. The probe's ground ring needs to touch the (–) lead and the probe tip needs to touch the (+) lead.

QUICK START PROCEDURE

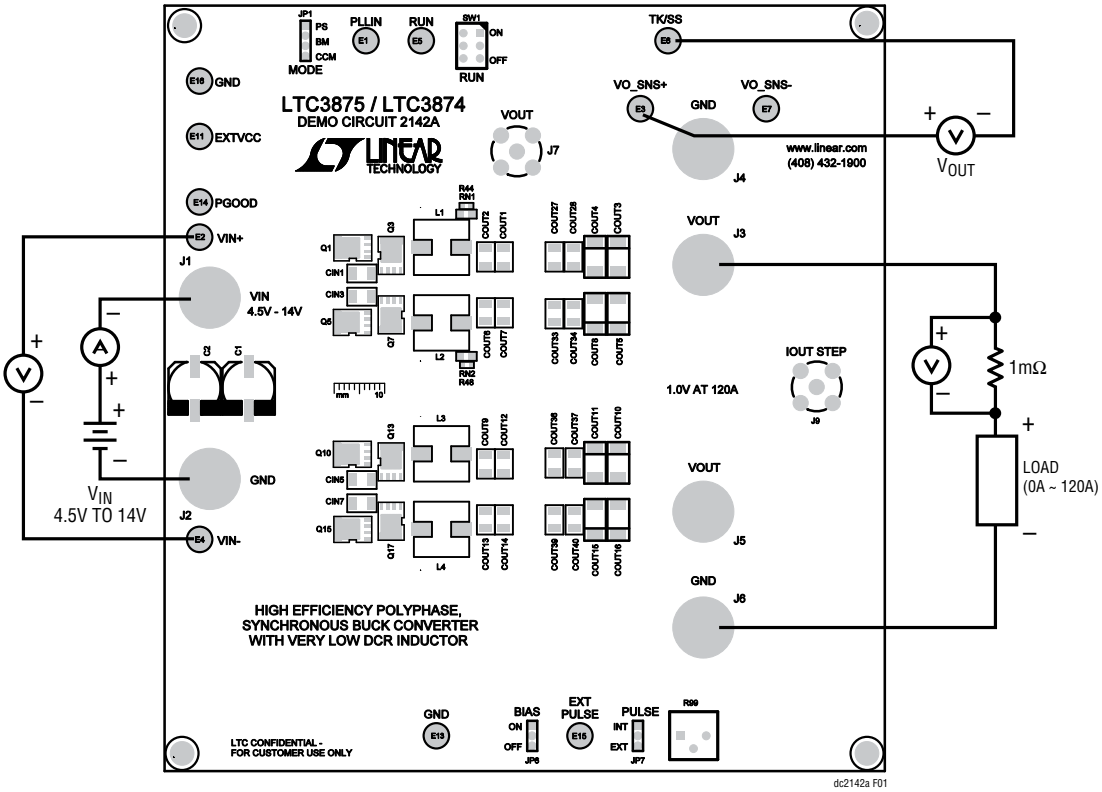

Figure 1. Proper Measurement Equipment Setup

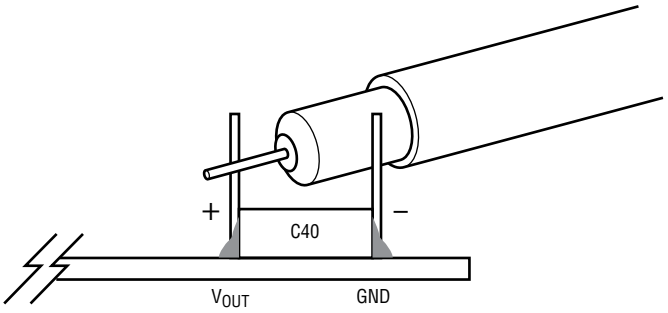

Figure 2. Measuring Output Voltage Ripple

QUICK START PROCEDURE

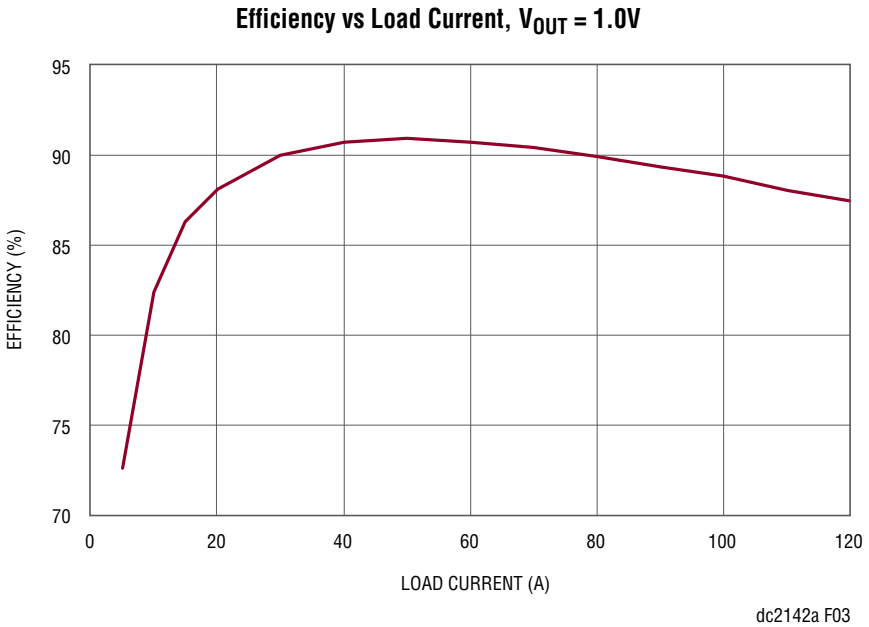

Figure 3. Efficiency vs Load Current at V_{IN} = 12V, V_{OUT} = 1.0V, f_{SW} = 400kHz

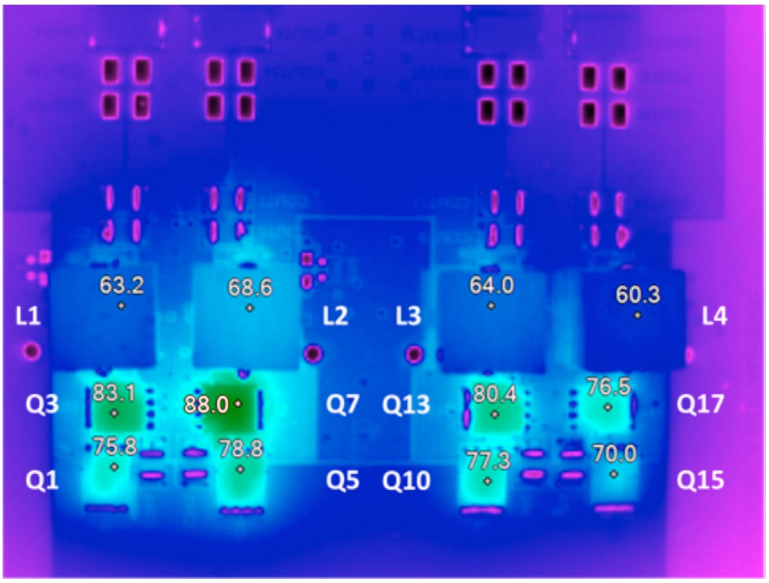

Figure 4. Thermal Performance at V_{IN} = 12V, V_{OUT} = 1.0V, I_{OUT} = 120A, 200PFM Forced Air Flow

QUICK START PROCEDURE

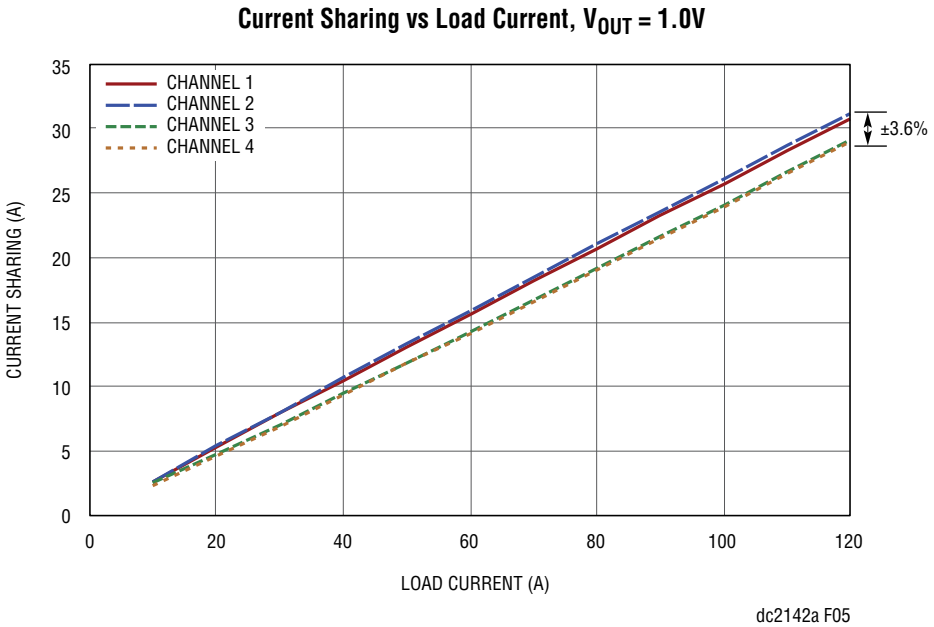

Figure 5. Current Sharing vs Load Current at V_{IN} = 12V, V_{OUT} = 1.0V, f_{SW} = 400kHz

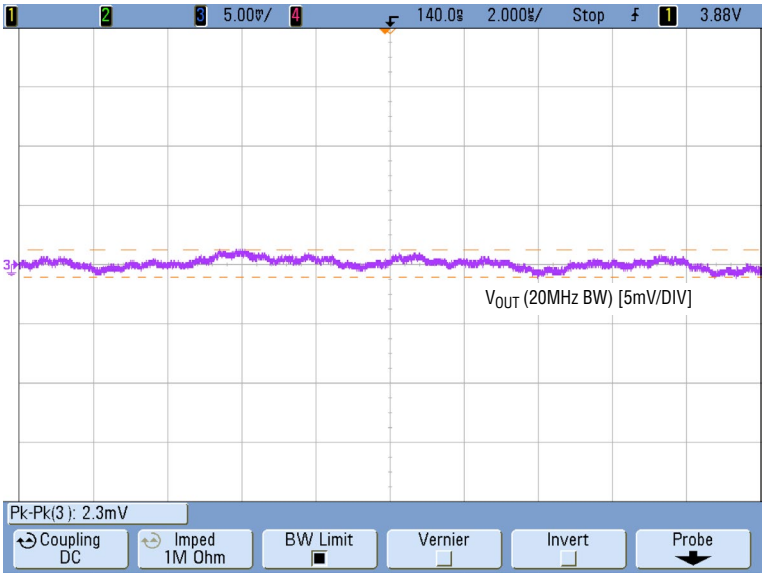

Figure 6. Output Voltage Ripple at V_{IN} = 12V, V_{OUT} = 1.0V, I_{OUT} = 120A

QUICK START PROCEDURE

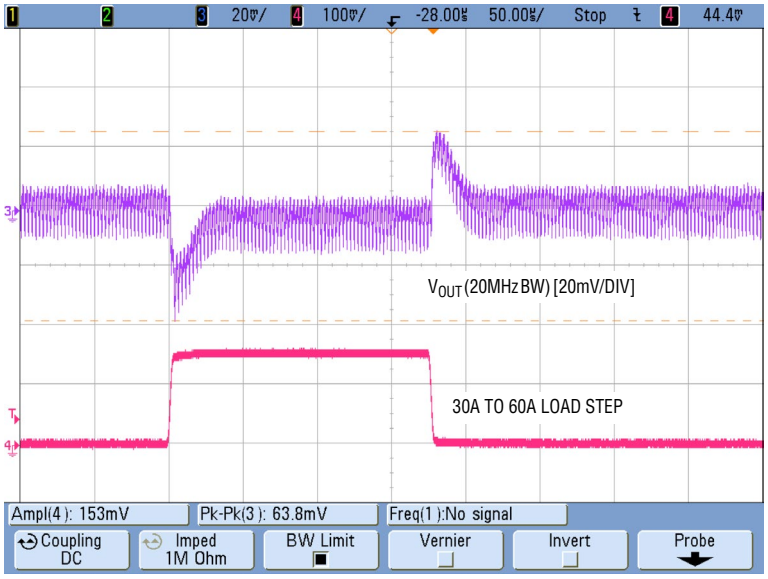

Figure 7. Transient Performance at V_{IN} = 12V, V_{OUT} = 1.0V, I_{OUT} = 30A ~ 60A

PARTS LIST

ITEM	QTY	REFERENCE	PART DESCRIPTION	MANUFACTURER/PART NUMBER
Required Circuit Components				
1	8	CIN1, CIN2, CIN3, CIN4, CIN5, CIN6, CIN7, CIN8	CAP, 1210, 10µF, 20%, 35V X5R	AVX 1210DD106MAT2A
2	14	COUT1, COUT2, COUT6, COUT7, COUT9, COUT12, COUT13, COUT14, COUT19, COUT20, COUT24, COUT25, C39, C40	CAP, 1210, 100µF, 20%, 6.3V X5R	TDK C3225X5R0J107M
3	12	COUT3, COUT4, COUT5, COUT8, COUT10, COUT11, COUT15, COUT16, COUT17,COUT18, COUT22, COUT23	CAP, 7343, 330µF, 20%, 6.3V POSCAP	SANYO 6TPF330M9L
4	3	C3, C25, C29	CAP, 0603, 1µF, 20%, 25V X5R	AVX 06033D105KAT2A
5	2	C1, C2	CAP, 270µF, 20%, 16V OSCON	PANASONIC 16SVPC270M
6	4	C4, C30, C31, C46	CAP, 0603, 4.7µF, 10%, 10V X5R	AVX 0603ZD475KAT2A
7	1	C5	CAP, 0603, 10nF, 10%, 16V X7R	AVX 0603YC103KAT2A
8	5	C7, C8, C18, C32, C36,	CAP, 0603, 0.1µF, 10%, 25V X5R	AVX 06033C104KAT2A
9	6	C10, C12, C20, C24, C33, C35	CAP, 0603, 220nF, 10%, 25V X7R	TDK C1608X7R1E224K
10	1	C15	CAP, 0603, 220pF, 5%, 50V C0G	AVX 06035A221JAT2A
11	1	C16	CAP, 0603, 2.2nF, 5%, 50V C0G	MURATA GRM1885C1H222JA01D
12	1	C34	CAP, 0603, 100pF, 10%, 16V X7R	AVX 0603YC101KAT2A
13	1	D1, D2, D3, D4	DIODE, SCHOTTKY 30V, 100mA	CENTRAL SEMI CMDSH-3-TR
14	4	L1, L2, L3, L4	IND, 0.25µH	WÜRTH ELEKTRONIK 744301025

PARTS LIST

ITEM	QTY	REFERENCE	PART DESCRIPTION	MANUFACTURER/PART NUMBER
15	4	Q1, Q5, Q10, Q15	XSTR, POWER MOSFET	INFINEON BSC050NE2LS
16	4	Q3, Q7, Q13, Q17	XSTR, POWER MOSFET	INFINEON BSC010NE2LSI
17	1	Q19	XSTR, N-CHANNEL DMOS FET	FAIRCHILD 2N7002A
18	2	Q20, Q21	XSTR, MOSFET, N-CHANNEL 30V	VISHAY SUD50N04-8M8P-4GE3
19	1	R1	RES, 0603, 20kΩ, 5%, 1/10W	VISHAY CRCW060320K0JNEA
20	1	R2	RES, 0603, 3.01kΩ, 1%, 1/10W	VISHAY CRCW06033K01FKEA
21	1	R3	RES, 0603, 1kΩ, 5%, 1/10W	VISHAY CRCW06031K00JNEA
22	3	R4, R51, R85	RES, 0603, 2.2Ω, 5%, 1/10W	VISHAY CRCW06032R20JNEA
23	2	R6, R14	RES, 0603, 10Ω, 1%, 1/10W	VISHAY CRCW060310R0FKEA
24	4	R8, R28, R58, R66	RES, 0603, 715Ω, 1%, 1/10W	VISHAY CRCW0603715RFKEA
25	2	R9, R27	RES, 0603, 3.57kΩ, 1%, 1/10W	VISHAY CRCW06033K57FKEA
26	13	R10, R13, R24, R50, R53, R54, R56, R57, R59, R60, R61, R65, R67	RES, 0603, 0Ω, JUMPER	VISHAY CRCW06030000Z0EA
27	1	R12	RES, 0603, 13.3kΩ, 1%, 1/10W	VISHAY CRCW060313K3FKEA
28	1	R17	RES, 0603, 20kΩ, 1%, 1/10W	VISHAY CRCW060320K0FKEA
29	1	R21	RES, 0603, 4.02kΩ, 1%, 1/10W	VISHAY CRCW06034K02FKEA
30	3	R33, R42, R69	RES, 0603, 100kΩ, 1%, 1/10W	VISHAY CRCW0603100KFKEA
31	1	R45	RES, 0603, 5kΩ, 5%, 1/10W	VISHAY CRCW06035K00JNED
32	2	R46, R47	RES, 0603, 10kΩ, 1%, 1/10W	VISHAY CRCW060310K0FKEA
33	1	R63	RES, 0603, 75kΩ 5% 1/10W	VISHAY CRCW060375K0JNEA
34	1	R102	RES, 0603, 237kΩ, 1%, 1/10W	VISHAY CRCW0603237KFKEA
35	1	SW1	SWITCH, SUBMINATURE SLIDE	C&K JS202011CQN
36	1	U1	IC, DUAL, 2-PHASE, SYNCHRONOUS REGULATORS	LINEAR TECH. LTC3875EUJ#PBF-ES
37	1	U2	IC, POLYPHASE STEP-DOWN SYNCHRONOUS SLAVE CONTROLLER	LINEAR TECH. LTC3874IUFD#PBF
Additional Demo Board Circuit Components				
1	0	COUT27, COUT28, COUT29, COUT30, COUT31, COUT32, COUT33, COUT34, COUT35, COUT36, COUT37, COUT38, COUT39, COUT40, COUT41, COUT42, COUT43, COUT44, COUT45, COUT46	CAP, 1210 OPTION	OPTION
2	0	C9, C11, C26, C27, C28	CAP, 0603 OPTION	OPTION
3	4	C43, C44, C47, COUT21,	CAP, 0603, 1µF, 20%, 25V X5R	AVX 06033D105KAT2A
4	1	C37	CAP, 0805, 10µF, 10%, 16V X5R	MURATA GRM21BR61C106KE15L
5	1	C38	CAP, 0805, 22µF, 10%, 10V X5R	TDK C2012X5R1A226K
6	1	C42	CAP, 0603, 150pF, 5%, 50V NPO	AVX 06035A151JAT2A
7	2	C41, C45	CAP, 0603, 0.1µF, 10%, 25V X5R	AVX 06033C104KAT2A
8	1	C48	CAP, 0603, 22pF, 2%, 50V C0G	MURATA GRM1885C1H220GA01D
9	1	D5	DIODE, SCHOTTKY 30V, 100mA	CENTRAL SEMI CMDSH-3-TR
10	1	L5	IND, 3.3µH	WÜRTH ELEKTRONIK 744043003

PARTS LIST

ITEM	QTY	REFERENCE	PART DESCRIPTION	MANUFACTURER/PART NUMBER
11	0	Q2, Q4, Q6, Q8, Q11, Q14, Q16, Q18	XSTR, POWER MOSFET OPTION	OPTION
12	2	R88, R92	RES, 0603, 20kΩ, 5% 1/10W	VISHAY CRCW060320K0JNEA
13	2	R68, R87	RES, 0603, 0Ω, JUMPER	VISHAY CRCW06030000Z0EA
14	0	RN1, RN2	THERMISTOR, OPTION	OPTION
15	0	R5, R7, R11, R15, R16, R18, R19, R34, R35, R37, R39, R40, R41, R43, R44, R48,R49, R52, R55, R62, R64, R70, R76, R101, R104, R105	RES, 0603 OPTION	OPTION
16	2	R77, R94	RES, 0603, 10kΩ, 1% 1/10W	VISHAY CRCW060310K0FKEA
17	1	R80	RES, 0603, 187kΩ, 1% 1/10W	VISHAY CRCW0603187KFKEA
18	1	R83	RES, 0603, 23.2kΩ, 1% 1/10W	VISHAY CRCW060323K2FKEA
19	1	R89	RES, 0603, 3.3Ω, 1%, 1/10W	VISHAY CRCW06033R30FNEA
20	1	R90	RES, 0603, 154kΩ, 1% 1/10W	VISHAY CRCW0603154KFKEA
21	1	R91	RES, 0603, 1MΩ, 5% 1/10W	VISHAY CRCW06031M00JNEA
22	1	R93	RES, 0603, 681kΩ, 1% 1/10W	VISHAY CRCW0603681KFEA
23	2	R95, R100	RES, 0603, 301Ω, 1% 1/10W	VISHAY CRCW0603301RFKEA
24	1	R96	RES, 0603, 82.5Ω, 5% 1/10W	VISHAY CRCW060382R5FKEA
25	2	R97, R98	RES, 2512, 0.01Ω, 1% 1W	VISHAY WSL2512R0100FEA
26	1	R99	RES, VARIABLE 5k	BOURNS 3386P-1-502-LF
27	1	UD1	IC, OSCILLATOR WITH SPREAD SPECTRUM MODULATION	LINEAR TECH. LTC6908S6-1#PBF
28	1	U3	IC, 17V, 1A, SYNCHRONOUS STEP-DOWN REGULATOR	LINEAR TECH. LTC3621EDCB-2#PBF
29	1	U4	IC, VOLTAGE-CONTROLLED PULSE WIDTH MODULATOR	LINEAR TECH. LTC6992IS6-1
30	1	U5	IC, SINGLE OP AMP	LINEAR TECH. LT1803IS5
Hardware: For Demo Board Only				
1	12	E1, E2, E3, E4, E5, E6, E7, E11, E13, E14, E15, E16	TURRET	MILL MAX 2501-2-00-80-00-00-07-0
2	1	JP1	HEADER, 4-PIN	WURTH 620 004 111 21
3	2	JP6, JP7	HEADER, SINGLE ROW 3-PIN	WURTH 620 003 111 21
4	6	J1, J2, J3, J4, J5, J6	STUD, TEST PIN	PEM KFH-032-10
5	2	J7, J9	CONN, BNC, 5-PINS	CONNEX 112404
6	6		LUG RING, #10	KEYSTONE 8205
7	4	MH1, MH2, MH3, MH4	STANDOFF, SNAP ON	KEYSTONE 8834
8	12		NUT, BRASS 10-32	ANY #10-32
9	6		WASHER, #10 TIN PLATED BRASS	ANY #10 EXT BZ TN
10	3	JP1, JP6, JP7	SHUNT	WURTH 608 002 134 21

SCHEMATIC DIAGRAM

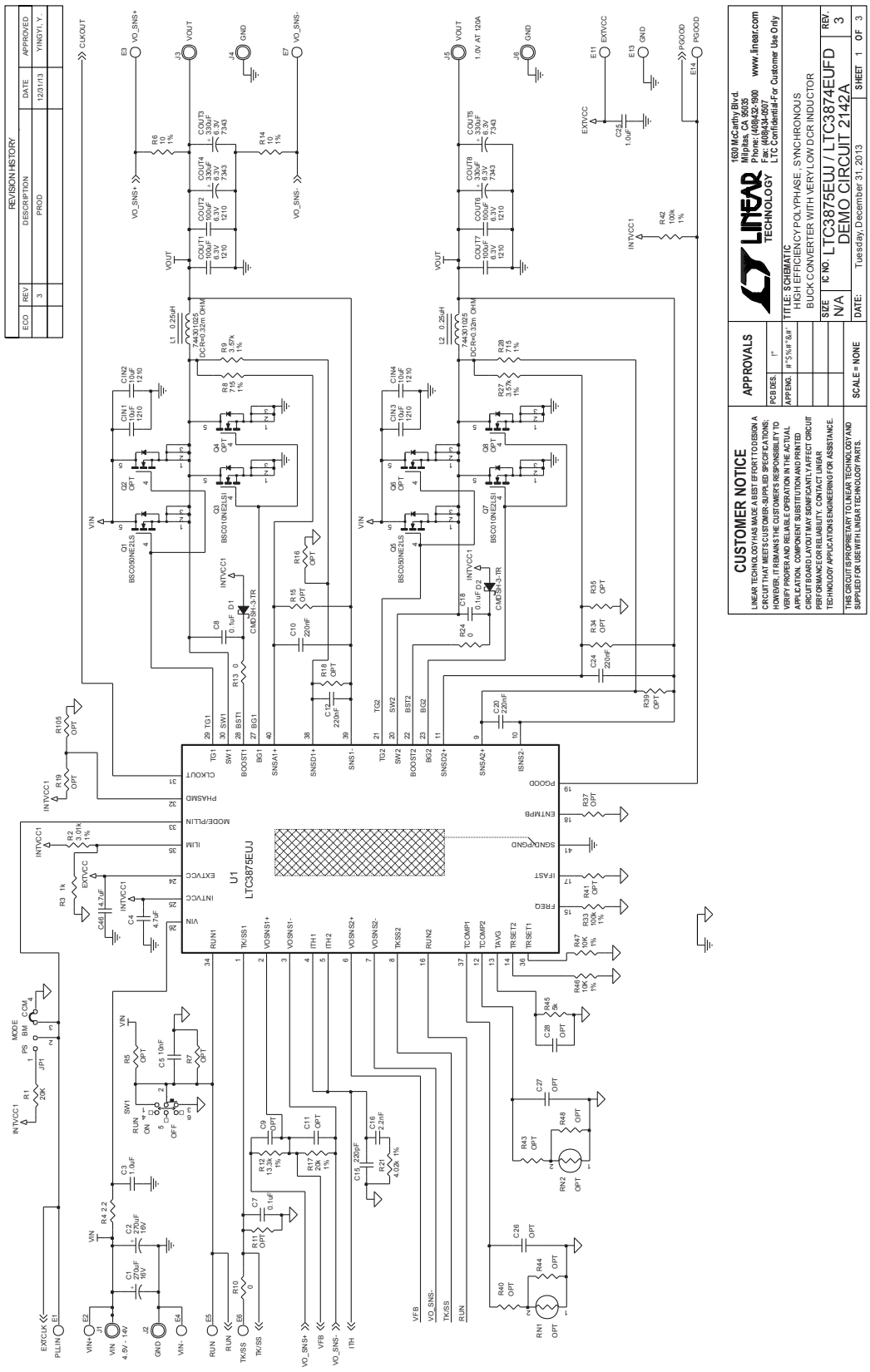

SCHEMATIC DIAGRAM

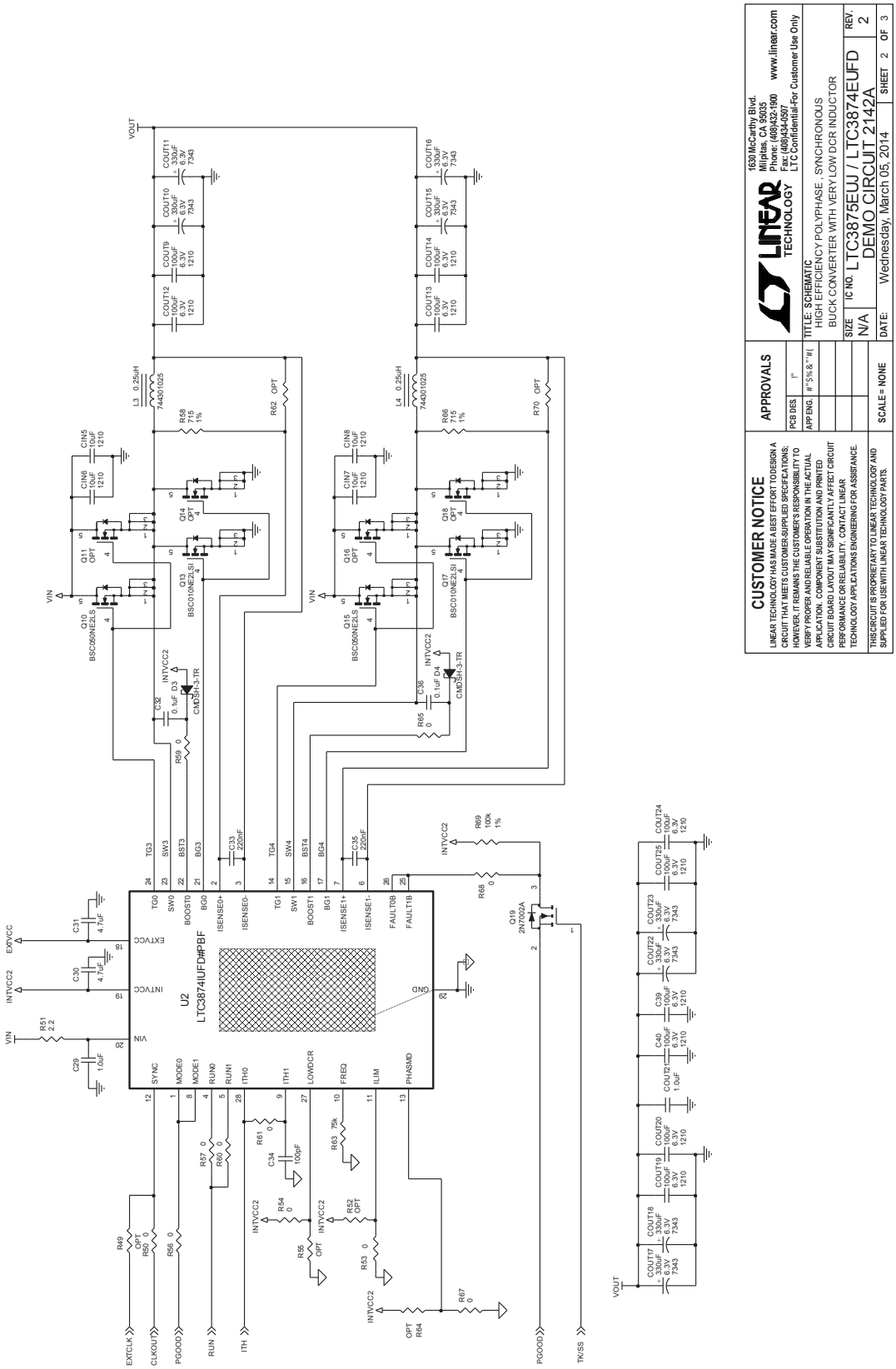

SCHEMATIC DIAGRAM

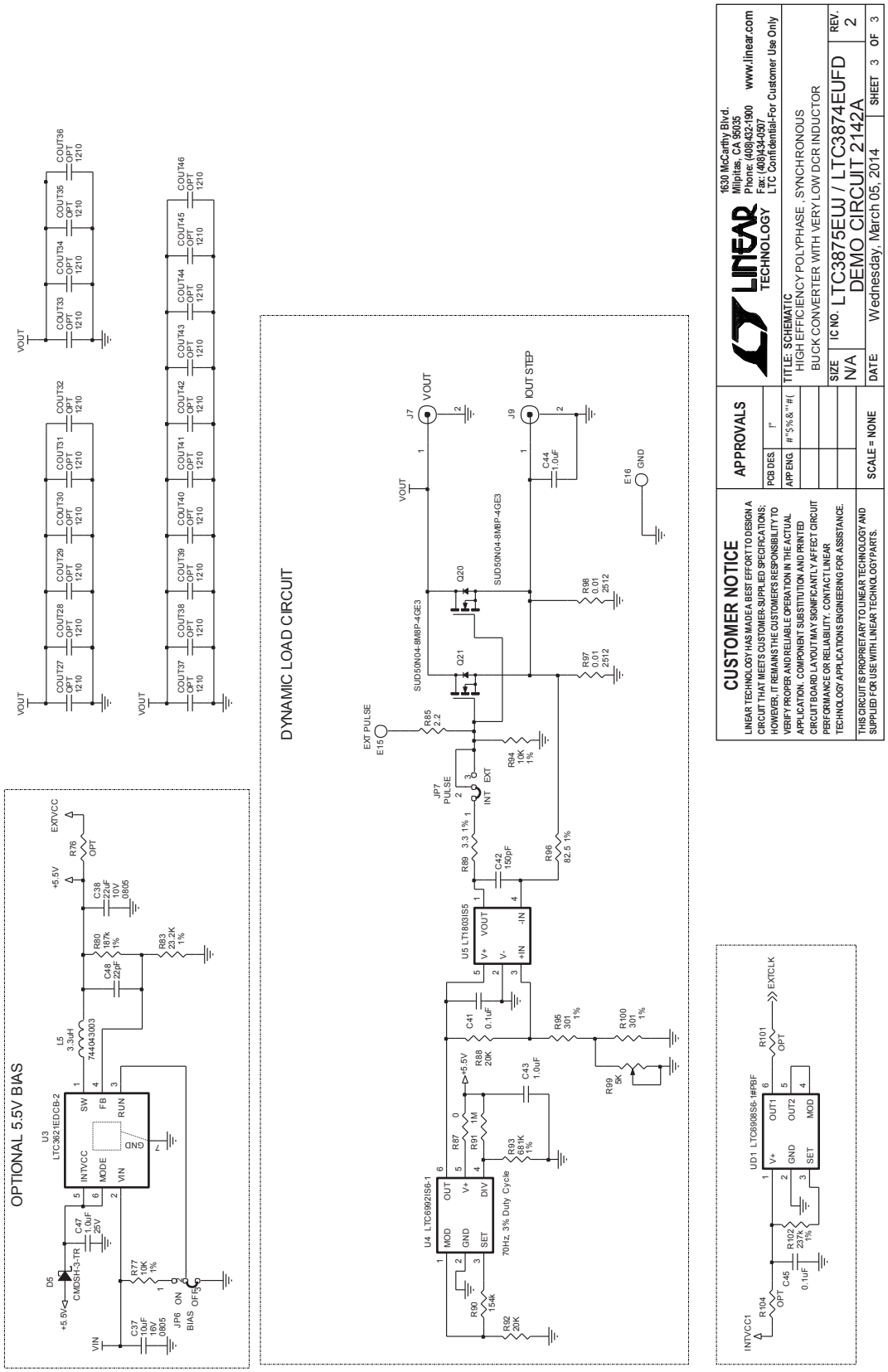

Information furnished by Linear Technology Corporation is believed to be accurate and reliable. However, no responsibility is assumed for its use. Linear Technology Corporation makes no representation that the interconnection of its circuits as described herein will not infringe on existing patent rights.

DEMONSTRATION BOARD IMPORTANT NOTICE

Linear Technology Corporation (LTC) provides the enclosed product(s) under the following **AS IS** conditions:

This demonstration board (DEMO BOARD) kit being sold or provided by Linear Technology is intended for use for **ENGINEERING DEVELOPMENT OR EVALUATION PURPOSES ONLY** and is not provided by LTC for commercial use. As such, the DEMO BOARD herein may not be complete in terms of required design-, marketing-, and/or manufacturing-related protective considerations, including but not limited to product safety measures typically found in finished commercial goods. As a prototype, this product does not fall within the scope of the European Union directive on electromagnetic compatibility and therefore may or may not meet the technical requirements of the directive, or other regulations.

If this evaluation kit does not meet the specifications recited in the DEMO BOARD manual the kit may be returned within 30 days from the date of delivery for a full refund. THE FOREGOING WARRANTY IS THE EXCLUSIVE WARRANTY MADE BY THE SELLER TO BUYER AND IS IN LIEU OF ALL OTHER WARRANTIES, EXPRESSED, IMPLIED, OR STATUTORY, INCLUDING ANY WARRANTY OF MERCHANTABILITY OR FITNESS FOR ANY PARTICULAR PURPOSE. EXCEPT TO THE EXTENT OF THIS INDEMNITY, NEITHER PARTY SHALL BE LIABLE TO THE OTHER FOR ANY INDIRECT, SPECIAL, INCIDENTAL, OR CONSEQUENTIAL DAMAGES.

The user assumes all responsibility and liability for proper and safe handling of the goods. Further, the user releases LTC from all claims arising from the handling or use of the goods. Due to the open construction of the product, it is the user's responsibility to take any and all appropriate precautions with regard to electrostatic discharge. Also be aware that the products herein may not be regulatory compliant or agency certified (FCC, UL, CE, etc.).

No License is granted under any patent right or other intellectual property whatsoever. **LTC assumes no liability for applications assistance, customer product design, software performance, or infringement of patents or any other intellectual property rights of any kind.**

LTC currently services a variety of customers for products around the world, and therefore this transaction **is not exclusive**.

Please read the DEMO BOARD manual prior to handling the product. Persons handling this product must have electronics training and observe good laboratory practice standards. **Common sense is encouraged**.

This notice contains important safety information about temperatures and voltages. For further safety concerns, please contact a LTC application engineer.

Mailing Address:

Linear Technology

1630 McCarthy Blvd.

Milpitas, CA 95035

Copyright © 2004, Linear Technology Corporation

© LINEAR TECHNOLOGY CORPORATION 2014

Мы молодая и активно развивающаяся компания в области поставок электронных компонентов. Мы поставляем электронные компоненты отечественного и импортного производства напрямую от производителей и с крупнейших складов мира.

Благодаря сотрудничеству с мировыми поставщиками мы осуществляем комплексные и плановые поставки широчайшего спектра электронных компонентов.

Собственная эффективная логистика и склад в обеспечивает надежную поставку продукции в точно указанные сроки по всей России.

Мы осуществляем техническую поддержку нашим клиентам и предпродажную проверку качества продукции. На все поставляемые продукты мы предоставляем гарантию .

Осуществляем поставки продукции под контролем ВП МО РФ на предприятия военно-промышленного комплекса России , а также работаем в рамках 275 ФЗ с открытием отдельных счетов в уполномоченном банке. Система менеджмента качества компании соответствует требованиям ГОСТ ISO 9001.

Минимальные сроки поставки, гибкие цены, неограниченный ассортимент и индивидуальный подход к клиентам являются основой для выстраивания долгосрочного и эффективного сотрудничества с предприятиями радиоэлектронной промышленности, предприятиями ВПК и научно-исследовательскими институтами России.

С нами вы становитесь еще успешнее!

Наши контакты:

Телефон: +7 812 627 14 35

Электронная почта: sales@st-electron.ru

Адрес: 198099, Санкт-Петербург, Промышленная ул, дом № 19, литера Н, помещение 100-Н Офис 331