*RoHS Compliant*

# USB *Flash Drive*

## *AH321 Product Specifications*

**March 23, 2017**

*Version 2.5*

***Apacer Technology Inc.***
1F, No.32, Zhongcheng Rd., Tucheng Dist., New Taipei City, Taiwan, R.O.C
Tel: +886-2-2267-8000 Fax: +886-2-2267-2261
www.apacer.com

# FEATURES:

- **USB2.0 High-Speed and USB1.1 Full-Speed Compatible Interface**
- **Capacity**
  - For SLC: 256, 512 MB
    1, 2, 4, 8, 16, 32 GB
  - For MLC: 4, 8, 16, 32, 64 GB
- **NAND Flash Type:** MLC & SLC
- **Performance***
  - Sustained read: up to 34 MB/s
  - Sustained write: up to 22 MB/s
- **Flash Management**
  - Implements advanced wear-leveling algorithms to substantially increase longevity of flash media
  - BCH (24 bit) Error Detection Code/Error Correction Code (EDC/ECC)
  - S.M.A.R.T.
- **MTBF**
  - SLC: 2,000,000 hours
  - MLC: 2,000,000 hours
- **Temperature Range**
  - Operating:
    Standard: 0°C to 70°C
    Extended: -40°C to 85°C
  - Storage: -40°C to 100°C
- **Power Consumption**
  - Active mode: 185 mA
  - Idle mode: 65 mA
  - Operating voltage: 5V
- **Support Non-Removable Setting**
- **LED Indicators for Drive Behavior**
- **OS Support**
  - Windows: WinXP/7 or later
  - Mac: 10.2.8 or later
  - Linux: 2.4.10 or later
- **Dimensions:** 53.60 x 19.00 x 8.00, unit: mm
- **EMC:** FCC, CE
- **RoHS Compliant**

*Varies from capacities. The results for performance and power consumption addressed here are typical and may vary in real world platforms.


©2017 Apacer Technology, Inc.

# Table of Contents

**1. General Description ..... 3**

1.1 Functional Block ..... 3
1.2 Error Correction Code (ECC) ..... 3
1.3 Wear-Leveling ..... 3
1.4 S.M.A.R.T. ..... 3

**2. General Specifications ..... 4**

2.1 General Specifications ..... 4
2.2 Performance Specifications – SLC ..... 4
2.3 Performance Specifications – MLC ..... 4

**3. Electrical Specifications ..... 5**

**4. Physical Dimensions ..... 6**

**5. Product Ordering Information ..... 7**

5.1 Product Code Designations ..... 7
5.2 Valid Combinations ..... 8
*5.2.1 AH321 (SLC) ..... 8*
*5.2.2 AH321 (MLC) ..... 8*


©2017 Apacer Technology, Inc.

# 1. General Description

Apacer's USB FLASH Drive (UFD) is a high performance flash disk drive designed offering portable storage solutions. UFDs can be plugged into a standard USB 2.0 connector commonly found in desktops, portable computers and even enterprise PC systems. Apacer's UFDs have an efficient built-in microcontroller and file management firmware that ensures ideal performance, functionality and reliability. This product is well suited for portable flash storage applications while operating at minimal power consumption.

## 1.1 Functional Block

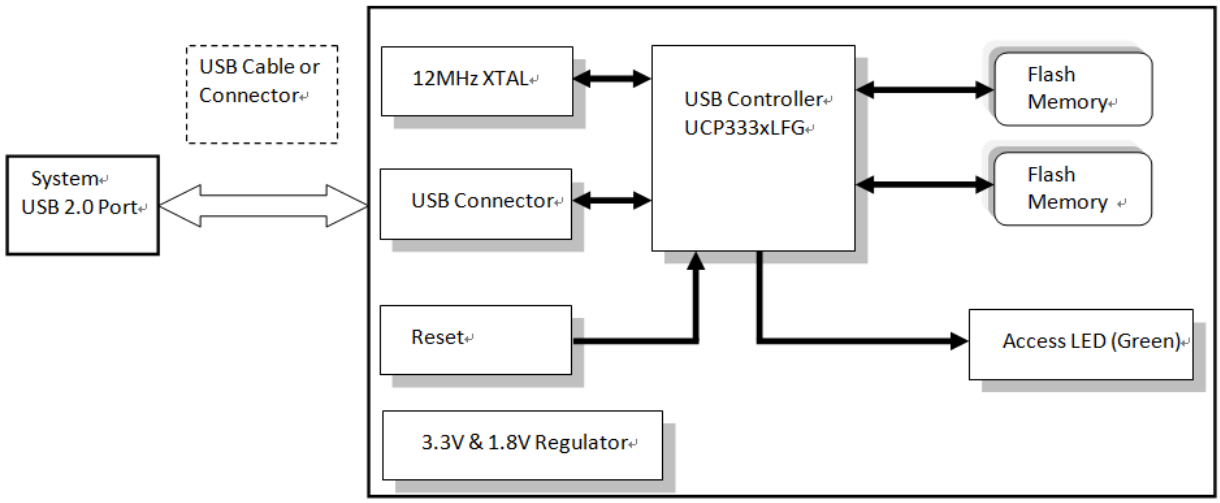


**Figure 1-1** Functional Block Diagram

## 1.2 Error Correction Code (ECC)

Apacer's USB FLASH Drive (UFD) uses BCH Error Detection Code (EDC) and Error Correction Code (ECC) algorithms which correct up to 24 random single-bit errors for each 1024-byte block of data.

## 1.3 Wear-Leveling

Flash memory can be erased a limited number of times. In a typical application, and especially if a file system is used, specific pages are constantly updated (e.g., the page that contains the FAT, registry, etc.). Without any special handling, these pages would wear out more rapidly than other pages, reducing the lifetime of the entire flash. To overcome this inherent deficiency, Apacer's USB FLASH Drive (UFD) uses wear-leveling algorithm. This wear-leveling algorithm ensures that consecutive writes of a specific sector are not written physically to the same page in the flash. This distributes flash media usage evenly across all pages, thereby maximizing flash lifetime. The wear-leveling mechanism provides write/erase cycles for reliable data storage over an extended period.

## 1.4 S.M.A.R.T.

S.M.A.R.T. is an abbreviation for Self-Monitoring, Analysis and Reporting Technology, a self-monitoring system that provides indicators of drive health as well as potential disk problems. It serves as a warning for users from unscheduled downtime by monitoring and displaying critical drive information. Ideally, this should allow taking proactive actions to prevent drive failure and make use of S.M.A.R.T. information for future product development reference.


©2017 Apacer Technology, Inc.

# 2. General Specifications

## 2.1 General Specifications

**Table 2-1** General Specifications

| Item | Description |
|---|---|
| **Interface** | High-speed USB2.0 compliant; backward compatible with USB 1.1 |
| **Performance*** | SLC: up to 34 MB/s (read); 22 MB/s (write)<br>MLC: up to 33 MB/s (read); 16 MB/s (write) |
| **Temperature** | 0°C to 70°C (Standard); -40°C to 85°C (Extended) |
| **EMC** | FCC, CE |
| **MTBF** | 2,000,000 hours (SLC); 2,000,000 (MLC) |
| **Shock** | Operation: 50G, 11ms<br>Non-operation: 1,500G, 0.5ms |
| **Vibration** | Operation: 7.69 Grms, 20~2000 Hz/random (complies with MIL-STD-810G)<br>Non-operation: 15 G, 10 ~ 2000 Hz/sine |

Note: Results may vary from flash configurations or host system settings.

## 2.2 Performance Specifications – SLC

**Table 2-2** Performance Specifications (SLC)

| Capacity / Performance | 256 MB | 512 MB | 1 GB | 2 GB | 4 GB | 8 GB | 16 GB | 32 GB |
|---|---|---|---|---|---|---|---|---|
| **Sustained Read (MB/s)** | 31 | 31 | 32 | 34 | 28 | 32 | 34 | 31 |
| **Sustained Write (MB/s)** | 10 | 15 | 19 | 19 | 21 | 15 | 22 | 21 |

Note: Results may vary depending on flash configurations or host system settings.

## 2.3 Performance Specifications – MLC

**Table 2-3** Performance Specifications (MLC)

| Capacity / Performance | 4 GB | 8 GB | 16 GB | 32 GB | 64 GB |
|---|---|---|---|---|---|
| **Sustained Read (MB/s)** | 32 | 32 | 33 | 33 | 29 |
| **Sustained Write (MB/s)** | 10 | 10 | 14 | 16 | 10 |

Note: Results may vary depending on flash configurations or host system settings.


©2017 Apacer Technology, Inc.

# 3. Electrical Specifications

***Caution: Absolute Maximum Stress Ratings*** – Applied conditions greater than those listed under "Absolute Maximum Stress Ratings" may cause permanent damage to the device. This is a stress rating only and functional operation of the device at these conditions or conditions greater than those defined in the operational sections of this data sheet is not implied. Exposure to absolute maximum stress rating conditions may affect device reliability.

**Table 3-1** Absolute Stress Rating

| Parameters | Conditions |
|---|---|
| Ambient temperature | 0°C to 70°C (Standard); -40°C to 85°C (Extended) |
| Storage temperature | -40°C to 100°C |
| Required power supply | 4.5-5.5V |
| Input power (VDD ) | -0.3V (min.) to 5.5V (max.) |
| Voltage on any pin except VDD with respect to GND | -0.3V (min.) to VDD + 0.3V (max.) |


©2017 Apacer Technology, Inc.

# 4. Physical Dimensions

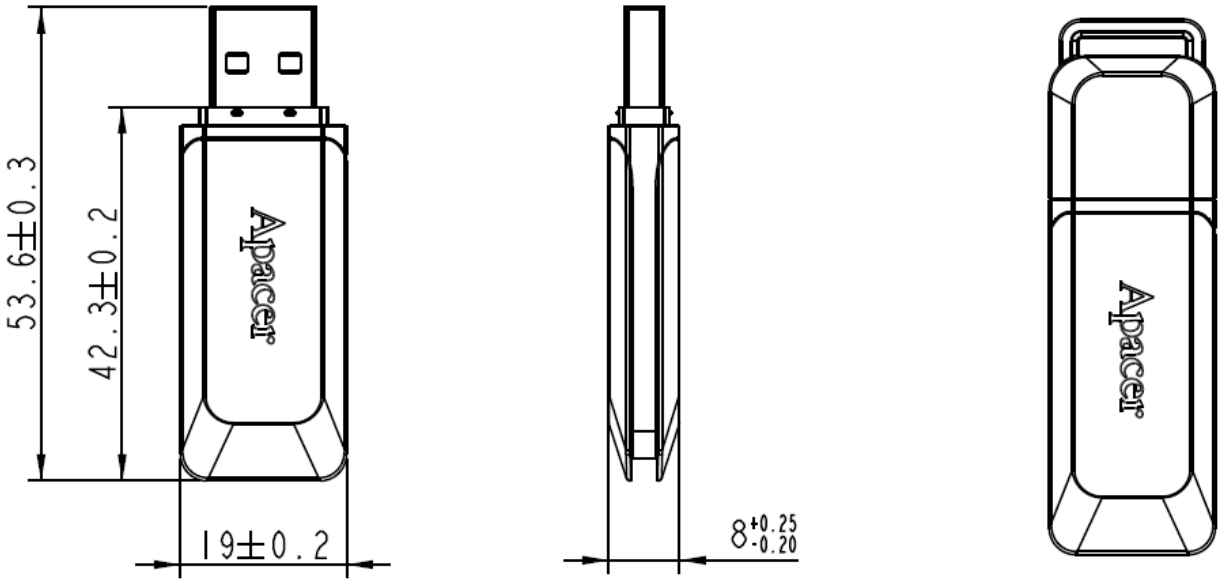



©2017 Apacer Technology, Inc.

# 5. Product Ordering Information

## 5.1 Product Code Designations

AP HA xxxX X 1 3 X G – X XX

**Flash Type**
T: Toshiba SLC
CM: Micron MLC

**Firmware Version**

**G: RoHS Compliant**

**Temperature**
C: Commercial Temperature
E: Extended Temperature

**PCB Version**

**Model Name**
1 = AH321

**Solution Version**

**Capacity**
256M = 256MB
512M = 512MB
001G = 1GB
002G = 2GB
004G = 4GB
008G = 8GB
016G = 16GB
032G = 32GB
064G = 64GB

**Handy**

**Apacer Product Code**


©2017 Apacer Technology, Inc.

## 5.2 Valid Combinations

### 5.2.1 AH321 (SLC)

| Capacity | Standard Temperature | Extended Temperature |
|---|---|---|
| 256 MB | APHA256MR13CG-6T | APHA256MT13EG-6T |
| 512 MB | APHA512MR13CG-6T | APHA512MT13EG-6T |
| 1 GB | APHA001GR13CG-6T | APHA001GT13EG-6T |
| 2 GB | APHA002GR13CG-6T | APHA002GT13EG-6T |
| 4 GB | APHA004GR13CG-6T | APHA004GT13EG-6T |
| 8 GB | APHA008GR13CG-6T | APHA008GT13EG-6T |
| 16 GB | APHA016GR13CG-6T | APHA016GT13EG-6T |
| 32 GB | APHA032GR13CG-6T | APHA032GT13EG-6T |

### 5.2.2 AH321 (MLC)

| Capacity | Standard Temperature | Extended Temperature |
|---|---|---|
| 4 GB | APHA004GR13CG-2CM | APHA004GT13EG-2CM |
| 8 GB | APHA008GR13CG-2CM | APHA008GT13EG-2CM |
| 16 GB | APHA016GR13CG-2CM | APHA016GT13EG-2CM |
| 32 GB | APHA032GR13CG-2CM | APHA032GT13EG-2CM |
| 64 GB | APHA064GR13CG-2CM | APHA064GT13EG-2CM |


©2017 Apacer Technology, Inc.

# Revision History

| Revision | Description | Date |
|---|---|---|
| 1.0 | Official Release | August 11th, 2011 |
| 1.1 | Updated Product Ordering Information | June 20th, 2012 |
| 1.2 | Updated Product Ordering Information<br>- contents relating to extended temperature are removed | July 2nd, 2012 |
| 1.3 | Updated read/write performance due to change in NAND flash use<br>Updated addresses of Taiwan headquarter and the office in India | July 30th, 2013 |
| 1.4 | Added performance tables | June 4th, 2014 |
| 1.5 | Added SLC extended temperature models | October 17th, 2014 |
| 1.6 | Updated Product Ordering Information | November 17th, 2014 |
| 1.7 | Updated Product Ordering Information | February 17th, 2015 |
| 1.8 | Added storage temperature | November 11th, 2015 |
| 1.9 | Added 64GB support | November 26th, 2015 |
| 2.0 | - Revised mechanical specifications<br>- Added non-removable setting and OS support on Features page<br>- Added block diagram<br>- Added shock and vibration specifications<br>- Revised product ordering information | June 7th, 2016 |
| 2.1 | Added SLC&MLC to file name | October 3rd, 2016 |
| 2.2 | Revised storage temperature | December 13th, 2016 |
| 2.3 | - Updated MTBF hours for MLC and shock specifications<br>- Updated product ordering information | February 16th, 2017 |
| 2.4 | - Updated mechanical specifications<br>- Added S.M.A.R.T to Flash Management and LED Indicators for Drive Behavior on Features page<br>- Added 1.4 S.M.A.R.T.<br>- Updated product ordering information for SLC except 128MB | March 20th, 2017 |
| 2.5 | - Removed 128GB support<br>- Updated ECC description on Features page<br>- Removed flash types including Samsung SLC and Micron SLC from product code designations | March 23rd, 2017 |


©2017 Apacer Technology, Inc.

# Global Presence

**Taiwan (Headquarters)**

**Apacer Technology Inc.**
Apacer Technology Inc.
1F., No.32, Zhongcheng Rd., Tucheng Dist.,
New Taipei City 236, Taiwan R.O.C.
Tel: 886-2-2267-8000
Fax: 886-2-2267-2261
amtsales@apacer.com

**U.S.A.**

**Apacer Memory America, Inc.**
46732 Lakeview Blvd., Fremont, CA 94538
Tel: 1-408-518-8699
Fax: 1-510-249-9551
sa@apacerus.com

**Japan**

**Apacer Technology Corp.**
5F, Matsura Bldg., Shiba, Minato-Ku
Tokyo, 105-0014, Japan
Tel: 81-3-5419-2668
Fax: 81-3-5419-0018
jpservices@apacer.com

**Europe**

**Apacer Technology B.V.**
Science Park Eindhoven 5051 5692 EB Son,
The Netherlands
Tel: 31-40-267-0000
Fax: 31-40-290-0686
sales@apacer.nl

**China**

**Apacer Electronic (Shanghai) Co., Ltd**
Room D, 22/FL, No.2, Lane 600, JieyunPlaza,
Tianshan RD, Shanghai, 200051, China
Tel: 86-21-6228-9939
Fax: 86-21-6228-9936
sales@apacer.com.cn

**India**

**Apacer Technologies Pvt Ltd,**
Unit No.201, “Brigade Corner”, 7th Block Jayanagar,
Yediyur Circle, Bangalore – 560082, India
Tel: 91-80-4152-9061
Fax: 91-80-4170-0215
sales_india@apacer.com


**©2017 Apacer Technology, Inc.**

Мы молодая и активно развивающаяся компания в области поставок электронных компонентов. Мы поставляем электронные компоненты отечественного и импортного производства напрямую от производителей и с крупнейших складов мира.

Благодаря сотрудничеству с мировыми поставщиками мы осуществляем комплексные и плановые поставки широчайшего спектра электронных компонентов.

Собственная эффективная логистика и склад в обеспечивает надежную поставку продукции в точно указанные сроки по всей России.

Мы осуществляем техническую поддержку нашим клиентам и предпродажную проверку качества продукции. На все поставляемые продукты мы предоставляем гарантию .

Осуществляем поставки продукции под контролем ВП МО РФ на предприятия военно-промышленного комплекса России , а также работаем в рамках 275 ФЗ с открытием отдельных счетов в уполномоченном банке. Система менеджмента качества компании соответствует требованиям ГОСТ ISO 9001.

Минимальные сроки поставки, гибкие цены, неограниченный ассортимент и индивидуальный подход к клиентам являются основой для выстраивания долгосрочного и эффективного сотрудничества с предприятиями радиоэлектронной промышленности, предприятиями ВПК и научно-исследовательскими институтами России.

С нами вы становитесь еще успешнее!

**Наши контакты:**

**Телефон:** +7 812 627 14 35

**Электронная почта:** sales@st-electron.ru

**Адрес:** 198099, Санкт-Петербург, Промышленная ул, дом № 19, литера Н, помещение 100-Н Офис 331