DC-SE Series – General purpose DC LVDT

- **Single-Ended DC operation**
- **Low 6mA current consumption**
- **Stroke ranges from 0.1 to 6 inches**
- **0.25% linearity**
- **Stainless steel housing**
- **Double magnetic shielding**
- **EMI/ESD protected**
- **1 meter long shielded cable**
- **Captive core option**

DESCRIPTION

The DC-SE Series LVDTs operate on a single-ended DC power supply, and provide either a 0 to +5VDC or +1 to +6VDC output signal (wiring dependent) over their full range of displacement. The extremely linear and low noise output makes the DS-SE Series the perfect choice for interfacing to unipolar inputs of analog-to-digital converters, PLC's, and various data collection systems.

The DC-SE is internally regulated, thus providing immunity to line ripple and allowing operation from unregulated power sources of between 8.5 and 28VDC. The very low typical 6mA current draw is ideal for remote or battery powered applications. The highly stable oscillator provides excellent temperature performance throughout the operating temperature range, while synchronous demodulation insures superb noise rejection.

The built-in EMI/ESD protection and the shielded cable permit operation in noisy industrial environments, with double magnetic shielding providing the utmost protection from stray fields.

Like in most of our LVDTs, the DC-SE windings are vacuum impregnated with a specially formulated, high temperature, flexible resin, and the coil assembly is potted inside its housing with a two-component epoxy. This provides excellent protection against hostile environments such as high humidity, vibration and shock.

Available in a variety of stroke ranges from 0.1 to 6 inches, the DC-EC Series can be configured with a number of standard options including metric threaded core, guided core and small diameter/low mass core.

Captive core option: The DC-EC features an optional captive core design (available for most models) that greatly simplifies installation. The core rod and bearing assembly includes a Bronze bearing on the front end for self-alignment, while a PTFE sleeve allows low-friction travel through the stainless steel boreliner (spool tube). The core rod and the bearing assembly are both field serviceable.

Also see our other LVDTs with built-in signal conditioning: DC-EC (±DC voltage), HCD (Hermetically sealed, ±DC voltage), HC-485 (RS485 digital output), and the HCT-IS (Intrinsically safe, 4-20mA, 2-wire loop).

Measurement Specialties, Inc. (NASDAQ MEAS) offers many other types of sensors and signal conditioners. Data sheets can be downloaded from our web site at: http://www.meas-spec.com/datasheets.aspx

*MEAS acquired Schaevitz Sensors and the **Schaevitz**® trademark in 2000.*

FEATURES

- Unipolar DC operation
- Low power consumption
- Shock and vibration tolerant
- Captive core option *(available on select models)*
- AISI 400 Series stainless steel housing
- CE compliant
- Calibration certificate supplied with each unit

APPLICATIONS

- Factory floor automation
- Position feedback
- Data collection
- Process control
- Metrology
- Portable / battery powered measurements
- General industrial

DC-SE Series – General purpose DC LVDT

PERFORMANCE SPECIFICATIONS

ELECTRICAL SPECIFICATIONS							
Parameter	**DC-SE 100**	**DC-SE 250**	**DC-SE 500**	**DC-SE 1000**	**DC-SE 2000**	**DC-SE 4000**	**DC-SE 6000**
Stroke range	0.10 [2.54]	0.25 [6.35]	0.50 [12.7]	1.0 [25.4]	2.0 [50.8]	4.0 [101.6]	5.0 [152.4]
Sensitivity, VDC/inch	50	20	10	5	2.5	1.25	0.833
Sensitivity, VDC/mm	1.97	0.787	0.394	0.197	0.098	0.0492	0.0328
Input voltage	+8.5 to +28VDC						
Line regulation	1mV/VDC, maximum; 0.2mV/VDC, typical						
Input current	10mA maximum; 6mA typical						
Output voltage	0 to +5VDC (4 wire), +1 to +6VDC (3 wire) - Increases when the core is displaced towards the cable						
Output current	5mA maximum						
Non-linearity	±0.25% of FR, maximum						
Output ripple & noise	10 mVRMS, maximum						
Stability	0.125% of FSO						
Temp. coefficient of sensitivity	0.028%/ºF [0.05%/C], maximum						
Frequency response	200 Hertz @ -3dB						

ENVIRONMENTAL SPECIFICATIONS & MATERIALS	
Temperature range	-13°F to +185°F [-25°C to 85°C] Operating; -65°F to +257°F [-55°C to 125°C] Survival
Shock survival	250 g (11ms half-sine)
Vibration tolerance	10 g up to 2kHz
Housing material	AISI 400 Series stainless steel
Electrical connection	Cable with 4 conductor, 28AWG, stranded copper, braided shield and polyurethane jacket, 39 inches [1 meter] long

Notes:
All values are nominal unless otherwise noted; Dimensions are in inch [mm] unless otherwise noted
FR: Full Range is the stroke range, end to end; FR=S for 0 to S stroke range
FSO (Full Scale Output): Largest absolute value of the outputs measured at the ends of the range

WIRING SCHEMATIC & BLOCK DIAGRAM

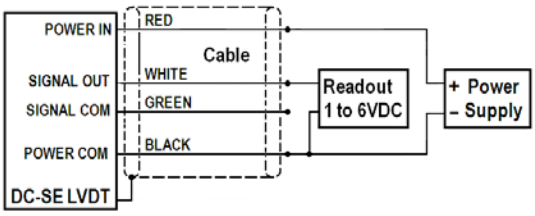

3-wire hookup for +1 to +6VDC output

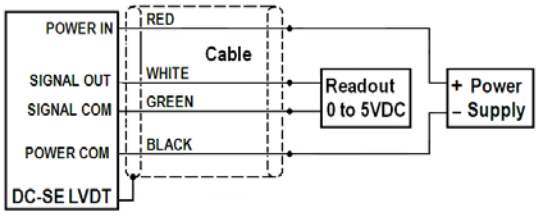

4-wire hookup for 0 to +5VDC output

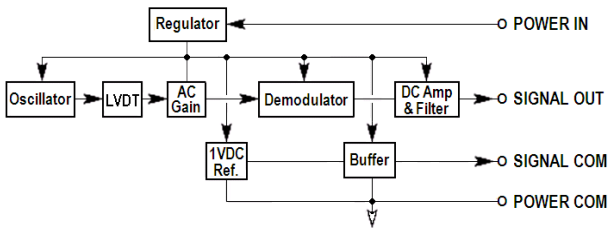

***Important**: NEVER connect SIG COM and PWR COM together; NEVER connect SIG COM to other DC-SE's*

DC-SE Series – General purpose DC LVDT

MECHANICAL SPECIFICATIONS – NON-CAPTIVE CORE (STANDARD)

Parameter	DC-SE 100	DC-SE 250	DC-SE 500	DC-SE 1000	DC-SE 2000	DC-SE 4000	DC-SE 6000
Main body length "A"	3.51 [89.2]	4.36 [110.7]	5.20 [132.1]	6.89 [175.0]	8.87 [225.3]	12.25 [311.2]	17.3 [439.4]
Core length "B"	0.585 [14.9]	1.10 [27.9]	1.80 [45.7]	3.00 [76.2]	3.80 [96.5]	5.30 [134.6]	6.20 [157.5]
Length of bore "C"	1.21 [30.7]	2.06 [52.2]	2.91 [73.8]	4.59 [116.7]	6.57 [166.8]	9.95 [252.8]	15.06 [382.5]
Center of core position at null "P"	0.51 [13.0]	0.93 [23.6]	1.35 [34.3]	2.20 [55.9]	3.19 [81.0]	4.88 [124.0]	7.56 [192.0]
Body weight oz [gram]	2.54 [72]	3.21 [91]	3.39 [96]	4.38 [124]	6.25 [177]	8.33 [236]	10.48 [297]
Core weight oz [gram]	0.035 [1]	0.11 [3]	0.18 [5]	0.28 [8]	0.35 [10]	0.53 [15]	0.64 [18]

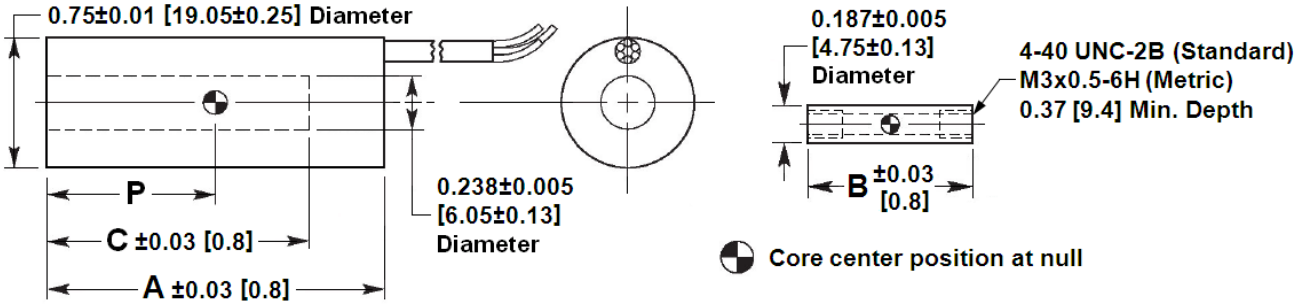

Dimensions are in inch [mm]

MECHANICAL SPECIFICATIONS – CAPTIVE CORE OPTION

Parameter	DC-SE 100	DC-SE 250	DC-SE 500	DC-SE 1000	DC-SE 2000	DC-SE 4000	DC-SE 6000
Main body length "A"	3.85 [97.8]	4.70 [119.4]	5.54 [140.7]	7.23 [183.6]	9.21 [233.9]	12.59 [319.8]	17.64 [448.1]
Core rod position at null "R"	3.69 [93.7]	4.28 [108.7]	4.75 [120.6]	6.04 [153.4]	7.90 [200.7]	10.52 [267.2]	15.27 [387.9]
Center of core position at null "P"	0.85 [21.6]	1.27 [32.2]	1.69 [42.9]	2.54 [64.5]	3.53 [89.7]	5.22 [132.6]	7.90 [200.7]
Weight, oz [gram]	1.52 [43]	4.09 [116]	4.34 [123]	5.51 [156]	7.62 [216]	10.13 [287]	12.92 [366]

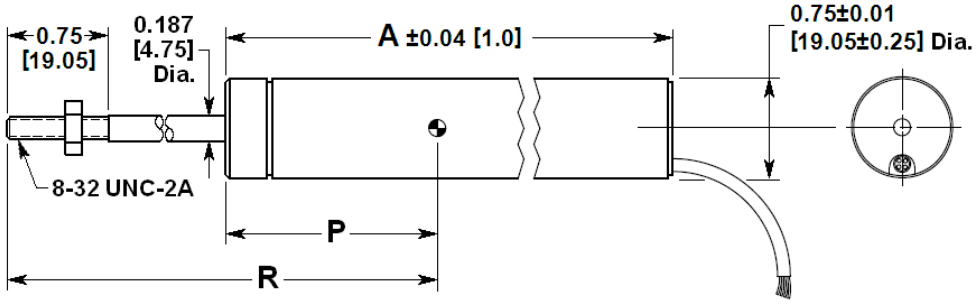

Dimensions are in inch [mm]

DC-SE Series – General purpose DC LVDT

ORDERING INFORMATION

Description	Model	Part Number
0.10 inch LVDT	DC-SE 100	02560990-000
0.25 inch LVDT	DC-SE 250	02560991-000
0.50 inch LVDT	DC-SE 500	02560992-000
1 inch LVDT	DC-SE 1000	02560993-000

Description	Model	Part Number
2 inch LVDT	DC-SE 2000	02560994-000
4 inch LVDT	DC-SE 4000	02560995-000
6 inch LVDT	DC-SE 6000	02560996-000

OPTIONS	
Metric threaded core (M3 x 0.5-6H)	xxxxxxxx-006
Guided core	xxxxxxxx-010
Small-diameter/low-mass core *(consult factory for mass & dimensions)*	xxxxxxxx-020
Captive core	xxxxxxxx-200

Note: *Add multiple option dash numbers together to determine proper ordering suffix*
Example: DC-SE 1000, 1 inch stroke, with metric threaded and guided core, P/N 02560993-016

ACCESSORIES		
DC power supply (15VDC)	Model PSD 40-15	02291339-000
Core connecting rod, 6 inches long, 4-40 threads		05282946-006
Core connecting rod, 12 inches long, 4-40 threads		05282946-012
Core connecting rod, 24 inches long, 4-40 threads		05282946-024
Core connecting rod, 36 inches long, 4-40 threads		05282946-036
Core connecting rod, 6 inches long, M3x0.5 metric threads		05282977-006
Core connecting rod, 12 inches long, M3x0.5 metric threads		05282977-012
Mounting block		04560950-000

Refer to our "Accessories for LVDTs" data sheet for our LVDT signal conditioning instrumentation and other accessories.

TECHNICAL CONTACT INFORMATION

NORTH AMERICA	EUROPE	ASIA
Measurement Specialties, Inc. 1000 Lucas Way Hampton, VA 23666 United States Phone: +1-800-745-8008 Fax: +1-757-766-4297 Email: sales@meas-spec.com Web: www.meas-spec.com	MEAS Deutschland GmbH Hauert 13 D-44227 Dortmund Germany Phone: +49-(0)231-9740-0 Fax: +49-(0)231-9740-20 Email: info.de@meas-spec.com Web: www.meas-spec.com	Measurement Specialties China Ltd. No. 26, Langshan Road High-tech Park (North) Nanshan District, Shenzhen 518057 China Phone: +86-755-33305088 Fax: +86-755-33305099 Email: info.cn@meas-spec.com Web: www.meas-spec.com

The information in this sheet has been carefully reviewed and is believed to be accurate; however, no responsibility is assumed for inaccuracies. Furthermore, this information does not convey to the purchaser of such devices any license under the patent rights to the manufacturer. Measurement Specialties, Inc. reserves the right to make changes without further notice to any product herein. Measurement Specialties, Inc. makes no warranty, representation or guarantee regarding the suitability of its product for any particular purpose, nor does Measurement Specialties, Inc. assume any liability arising out of the application or use of any product or circuit and specifically disclaims any and all liability, including without limitation consequential or incidental damages. Typical parameters can and do vary in different applications. All operating parameters must be validated for each customer application by customer's technical experts. Measurement Specialties, Inc. does not convey any license under its patent rights nor the rights of others.

Стандарт Электрон Связь

Мы молодая и активно развивающаяся компания в области поставок электронных компонентов. Мы поставляем электронные компоненты отечественного и импортного производства напрямую от производителей и с крупнейших складов мира.

Благодаря сотрудничеству с мировыми поставщиками мы осуществляем комплексные и плановые поставки широчайшего спектра электронных компонентов.

Собственная эффективная логистика и склад в обеспечивает надежную поставку продукции в точно указанные сроки по всей России.

Мы осуществляем техническую поддержку нашим клиентам и предпродажную проверку качества продукции. На все поставляемые продукты мы предоставляем гарантию .

Осуществляем поставки продукции под контролем ВП МО РФ на предприятия военно-промышленного комплекса России , а также работаем в рамках 275 ФЗ с открытием отдельных счетов в уполномоченном банке. Система менеджмента качества компании соответствует требованиям ГОСТ ISO 9001.

Минимальные сроки поставки, гибкие цены, неограниченный ассортимент и индивидуальный подход к клиентам являются основой для выстраивания долгосрочного и эффективного сотрудничества с предприятиями радиоэлектронной промышленности, предприятиями ВПК и научно-исследовательскими институтами России.

С нами вы становитесь еще успешнее!

Наши контакты:

Телефон: +7 812 627 14 35

Электронная почта: sales@st-electron.ru

Адрес: 198099, Санкт-Петербург,
Промышленная ул, дом № 19, литера Н,
помещение 100-Н Офис 331