74ACT541

OCTAL BUS BUFFER WITH 3 STATE OUTPUTS (NON INVERTED)

- HIGH SPEED: t_{PD} = 4ns (TYP.) at V_{CC} = 5V
- LOW POWER DISSIPATION: I_{CC} = 4µA(MAX.) at T_A=25°C
- COMPATIBLE WITH TTL OUTPUTS V_{IH} = 2V (MIN.), V_{IL} = 0.8V (MAX.)
- 50Ω TRANSMISSION LINE DRIVING CAPABILITY
- SYMMETRICAL OUTPUT IMPEDANCE: $|I_{OH}| = I_{OL}$ = 24mA (MIN)
- BALANCED PROPAGATION DELAYS: $t_{PLH} \cong t_{PHL}$
- OPERATING VOLTAGE RANGE: V_{CC} (OPR) = 4.5V to 5.5V
- PIN AND FUNCTION COMPATIBLE WITH 74 SERIES 541
- IMPROVED LATCH-UP IMMUNITY

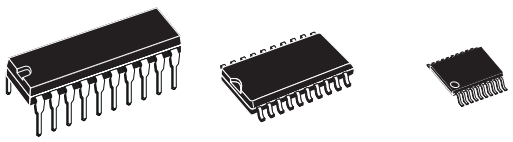

DIP SOP TSSOP

ORDER CODES

PACKAGE	TUBE	T & R
DIP	74ACT541B	
SOP	74ACT541M	74ACT541MTR
TSSOP		74ACT541TTR

DESCRIPTION

The 74ACT541 is an advanced high-speed CMOS OCTAL BUS BUFFER (3-STATE) fabricated with sub-micron silicon gate and double-layer metal wiring C^2MOS tecnology.

The 3 STATE control gate operates as two input AND such that if either $\overline{G1}$ and $\overline{G2}$ are high, all eight outputs are in the high impedance state.

In order to enhance PC board layout, the 74ACT541 offers a pinout having inputs and outputs on opposite sides of the package.

This device is designed to interface directly High Speed CMOS systems with TTL, NMOS and CMOS output voltage levlels.

All inputs and outputs are equipped with protection circuits against static discharge, giving them 2KV ESD immunity and transient excess voltage.

PIN CONNECTION AND IEC LOGIC SYMBOLS

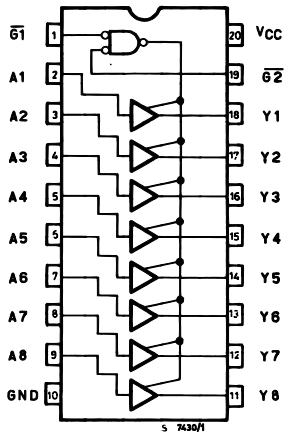

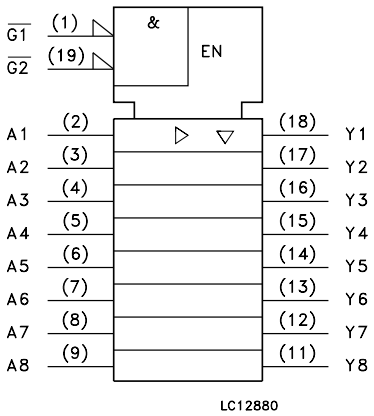

INPUT AND OUTPUT EQUIVALENT CIRCUIT

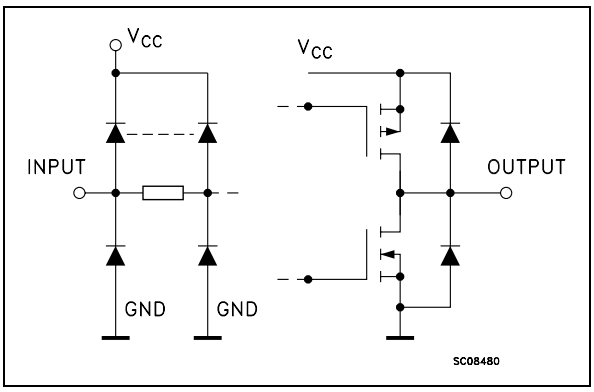

PIN DESCRIPTION

PIN No	SYMBOL	NAME AND FUNCTION
1, 19	$\overline{G1}$, $\overline{G2}$	Output Enable Inputs
2, 3, 4, 5, 6, 7, 8, 9	A1 to A8	Data Inputs
18, 17, 16, 15, 14, 13, 12, 11	Y1 to Y8	Data Outputs
10	GND	Ground (0V)
20	V_{CC}	Positive Supply Voltage

TRUTH TABLE

INPUTS			OUTPUT
$\overline{G1}$	$\overline{G2}$	An	Yn
H	X	X	Z
X	H	X	Z
L	L	H	H
L	L	L	L

X : Don't Care
Z : High Impedance

ABSOLUTE MAXIMUM RATINGS

Symbol	Parameter	Value	Unit
V_{CC}	Supply Voltage	-0.5 to +7	V
V_I	DC Input Voltage	-0.5 to V_{CC} + 0.5	V
V_O	DC Output Voltage	-0.5 to V_{CC} + 0.5	V
I_{IK}	DC Input Diode Current	± 20	mA
I_{OK}	DC Output Diode Current	± 20	mA
I_O	DC Output Current	± 50	mA
I_{CC} or I_{GND}	DC V_{CC} or Ground Current	± 400	mA
T_{stg}	Storage Temperature	-65 to +150	°C
T_L	Lead Temperature (10 sec)	300	°C

Absolute Maximum Ratings are those values beyond which damage to the device may occur. Functional operation under these conditions is not implied.

RECOMMENDED OPERATING CONDITIONS

Symbol	Parameter	Value	Unit
V_{CC}	Supply Voltage	4.5 to 5.5	V
V_I	Input Voltage	0 to V_{CC}	V
V_O	Output Voltage	0 to V_{CC}	V
T_{op}	Operating Temperature	-55 to 125	°C
dt/dv	Input Rise and Fall Time V_{CC} = 4.5 to 5.5V (note 1)	8	ns/V

1) V_{IN} from 0.8V to 2.0V

DC SPECIFICATIONS

Symbol	Parameter	Test Condition		Value							Unit
		V_{CC} (V)		T_A = 25°C			-40 to 85°C		-55 to 125°C		
				Min.	Typ.	Max.	Min.	Max.	Min.	Max.	
V_{IH}	High Level Input Voltage	4.5	V_O = 0.1 V or V_{CC}-0.1V	2.0	1.5		2.0		2.0		V
		5.5		2.0	1.5		2.0		2.0		
V_{IL}	Low Level Input Voltage	4.5	V_O = 0.1 V or V_{CC}-0.1V		1.5	0.8		0.8		0.8	
		5.5			1.5	0.8		0.8		0.8	V
V_{OH}	High Level Output Voltage	4.5	I_O=-50 µA	4.4	4.49		4.4		4.4		V
		5.5	I_O=-50 µA	5.4	5.49		5.4		5.4		
		4.5	I_O=-24 mA	3.86			3.76		3.7		V
		5.5	I_O=-24 mA	4.86			4.76		4.7		
V_{OL}	Low Level Output Voltage	4.5	I_O=50 µA		0.001	0.1		0.1		0.1	
		5.5	I_O=50 µA		0.001	0.1		0.1		0.1	
		4.5	I_O=24 mA			0.36		0.44		0.5	
		5.5	I_O=24 mA			0.36		0.44		0.5	
I_I	Input Leakage Current	5.5	$V_I = V_{CC}$ or GND			± 0.1		± 1		± 1	µA
I_{OZ}	High Impedance Output Leakege Current	5.5	$V_I = V_{IH}$ or V_{IL} $V_O = V_{CC}$ or GND			± 0.5		± 5		± 5	µA
I_{CCT}	Max I_{CC}/Input	5.5	$V_I = V_{CC}$ - 2.1V		0.6			1.5		1.6	mA
I_{CC}	Quiescent Supply Current	5.5	$V_I = V_{CC}$ or GND			4		40		80	µA
I_{OLD}	Dynamic Output Current (note 1, 2)	5.5	V_{OLD} = 1.65 V max					75		50	mA
I_{OHD}			V_{OHD} = 3.85 V min					-75		-50	mA

1) Maximum test duration 2ms, one output loaded at time

2) Incident wave switching is guaranteed on transmission lines with impedances as low as 50Ω

AC ELECTRICAL CHARACTERISTICS (C_L = 50 pF, R_L = 500 Ω, Input $t_r = t_f$ = 3ns)

Symbol	Parameter	Test Condition		Value							Unit
		V_{CC} (V)		T_A = 25°C			-40 to 85°C		-55 to 125°C		
				Min.	Typ.	Max.	Min.	Max.	Min.	Max.	
t_{PLH} t_{PHL}	Propagation Delay Time	5.0(*)		1.5	4.0	6.5	1.5	8.0	1.5	8.0	ns
t_{PZL} t_{PZH}	Output Enable Time	5.0(*)		1.5	6.0	7.8	1.5	9.0	1.5	9.0	ns
t_{PLZ} t_{PHZ}	Output Disable Time	5.0(*)		1.5	5.0	7.8	1.5	9.0	1.5	9.0	ns

(*) Voltage range is 5.0V ± 0.5V

CAPACITIVE CHARACTERISTICS

Symbol	Parameter	Test Condition		Value							Unit
		V_{CC} (V)		T_A = 25°C			-40 to 85°C		-55 to 125°C		
				Min.	Typ.	Max.	Min.	Max.	Min.	Max.	
C_{IN}	Input Capacitance	5.0			4						pF
C_{OUT}	Output Capacitance	5.0			8						pF
C_{PD}	Power Dissipation Capacitance (note 1)	5.0	f_{IN} = 10MHz		22						pF

1) C_{PD} is defined as the value of the IC's internal equivalent capacitance which is calculated from the operating current consumption without load. (Refer to Test Circuit). Average operating current can be obtained by the following equation. $I_{CC(opr)} = C_{PD} \times V_{CC} \times f_{IN} + I_{CC}/n$ (per circuit)

TEST CIRCUIT

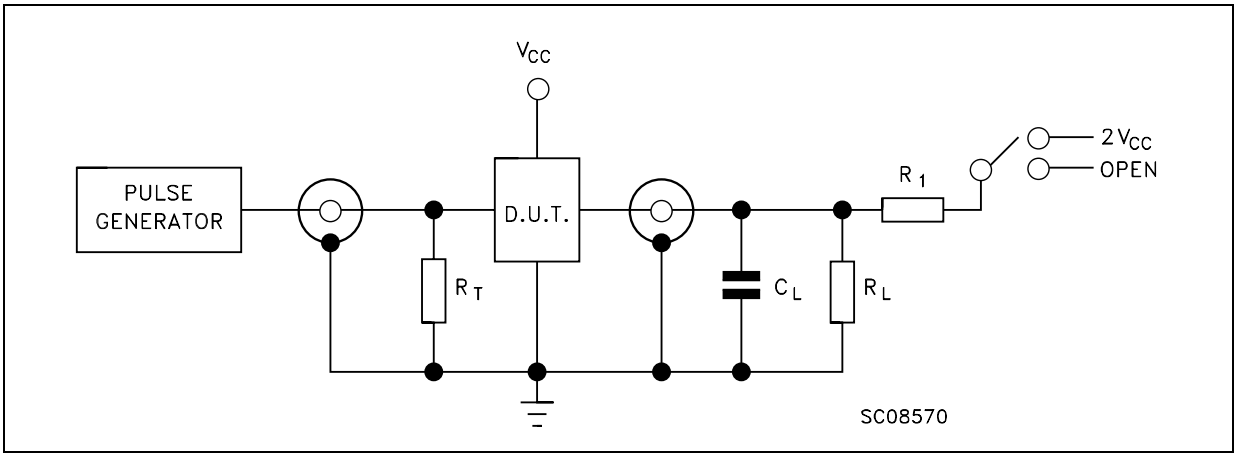

TEST	SWITCH
t_{PLH}, t_{PHL}	Open
t_{PZL}, t_{PLZ}	$2V_{CC}$
t_{PZH}, t_{PHZ}	Open

C_L = 50pF or equivalent (includes jig and probe capacitance)
$R_L = R_1$ = 500Ω or equivalent
$R_T = Z_{OUT}$ of pulse generator (typically 50Ω)

WAVEFORM 1: PROPAGATION DELAYS (f=1MHz; 50% duty cycle)

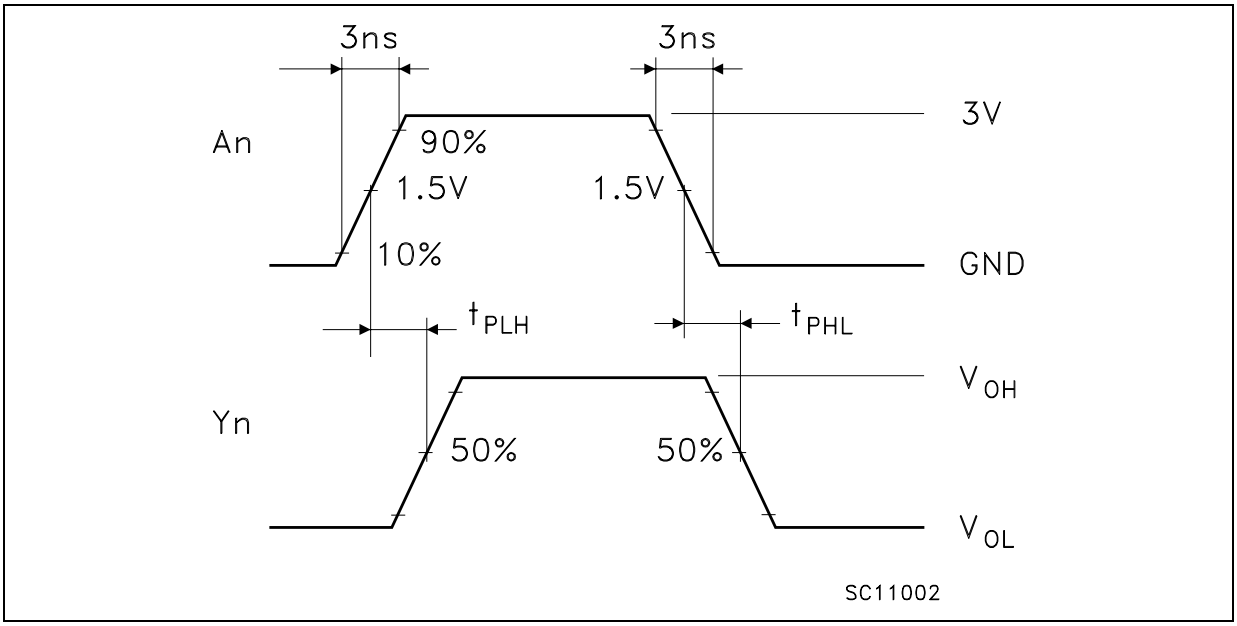

WAVEFORM 2: OUTPUT ENABLE AND DISABLE TIME (f=1MHz; 50% duty cycle)

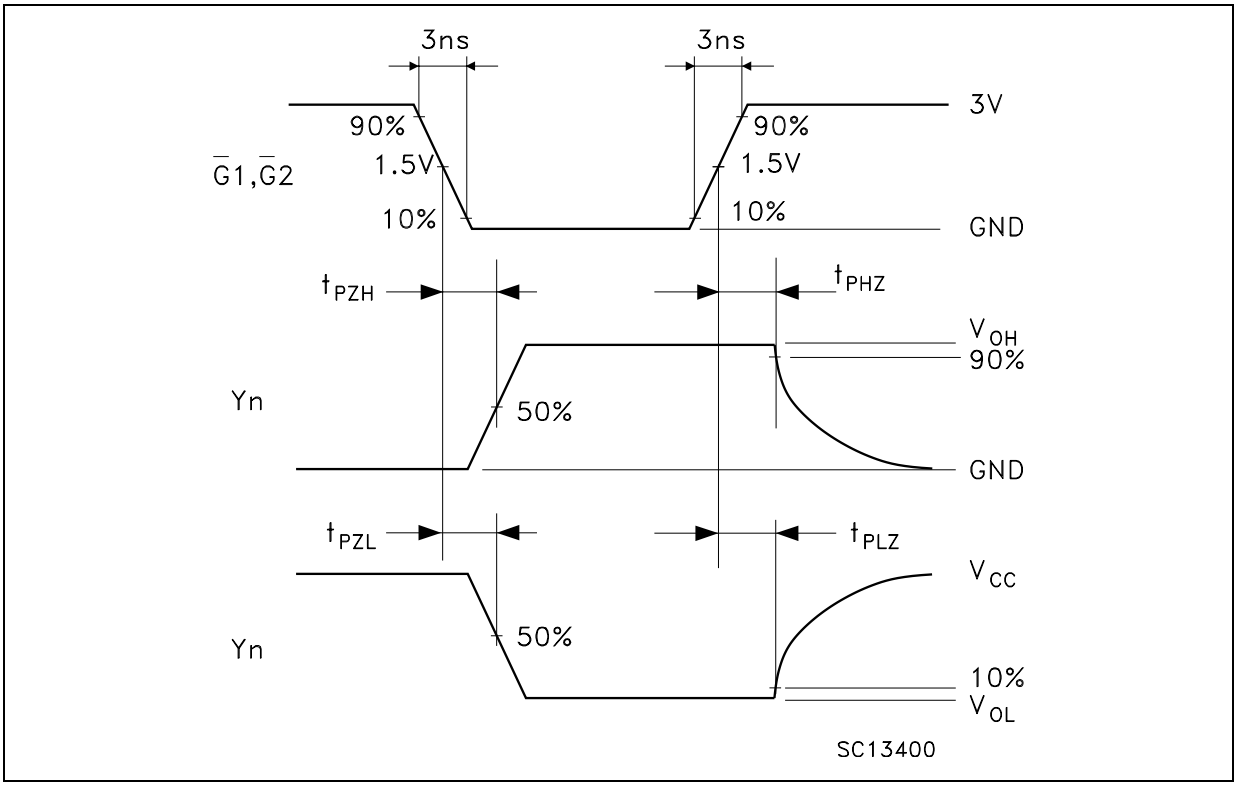

Plastic DIP-20 (0.25) MECHANICAL DATA

DIM.	mm			inch		
	MIN.	TYP.	MAX.	MIN.	TYP.	MAX.
a1	0.254			0.010		
B	1.39		1.65	0.055		0.065
b		0.45			0.018	
b1		0.25			0.010	
D			25.4			1.000
E		8.5			0.335	
e		2.54			0.100	
e3		22.86			0.900	
F			7.1			0.280
I			3.93			0.155
L		3.3			0.130	
Z			1.34			0.053

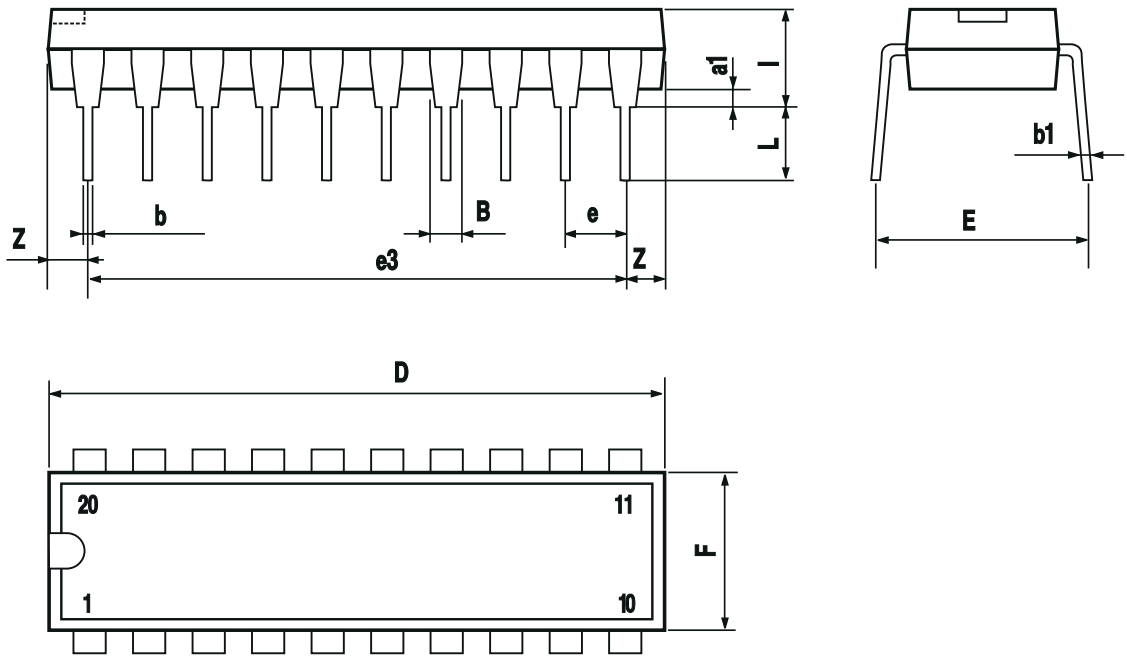

P001J

SO-20 MECHANICAL DATA

DIM.	mm			inch		
	MIN.	TYP.	MAX.	MIN.	TYP.	MAX.
A			2.65			0.104
a1	0.10		0.20	0.004		0.007
a2			2.45			0.096
b	0.35		0.49	0.013		0.019
b1	0.23		0.32	0.009		0.012
C		0.50			0.020	
c1	45 (typ.)					
D	12.60		13.00	0.496		0.512
E	10.00		10.65	0.393		0.419
e		1.27			0.050	
e3		11.43			0.450	
F	7.40		7.60	0.291		0.299
L	0.50		1.27	0.19		0.050
M			0.75			0.029
S	8 (max.)					

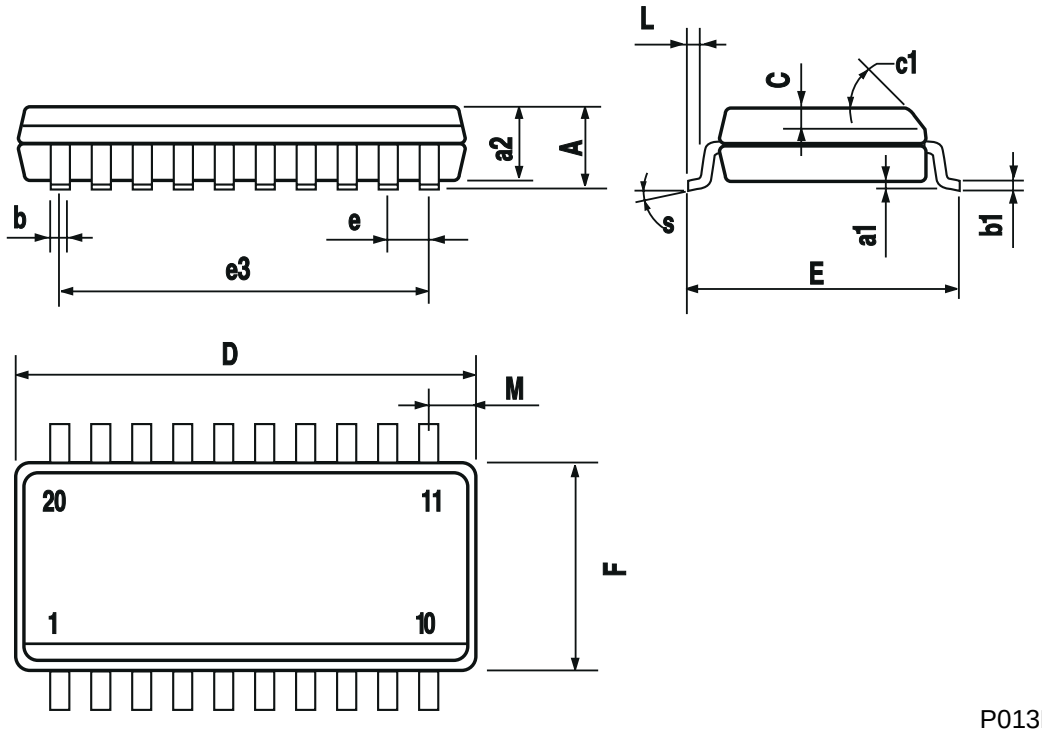

P013L

TSSOP20 MECHANICAL DATA

DIM.	mm			inch		
	MIN.	TYP.	MAX.	MIN.	TYP.	MAX.
A			1.1			0.433
A1	0.05	0.10	0.15	0.002	0.004	0.006
A2	0.85	0.9	0.95	0.335	0.354	0.374
b	0.19		0.30	0.0075		0.0118
c	0.09		0.2	0.0035		0.0079
D	6.4	6.5	6.6	0.252	0.256	0.260
E	6.25	6.4	6.5	0.246	0.252	0.256
E1	4.3	4.4	4.48	0.169	0.173	0.176
e		0.65 BSC			0.0256 BSC	
K	0°	4°	8°	0°	4°	8°
L	0.50	0.60	0.70	0.020	0.024	0.028

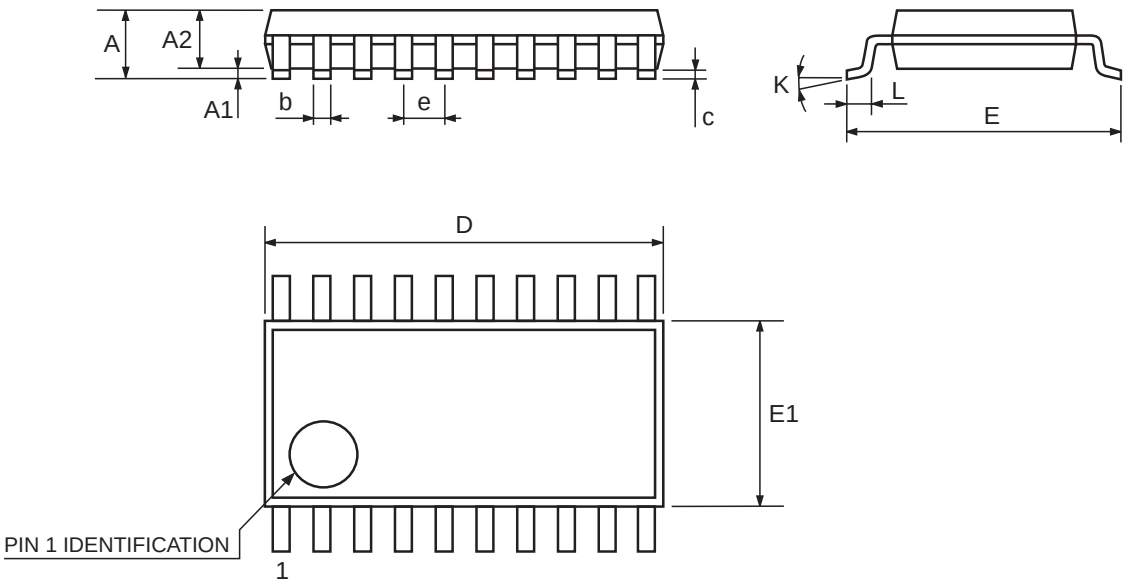

Information furnished is believed to be accurate and reliable. However, STMicroelectronics assumes no responsibility for the consequences of use of such information nor for any infringement of patents or other rights of third parties which may result from its use. No license is granted by implication or otherwise under any patent or patent rights of STMicroelectronics. Specifications mentioned in this publication are subject to change without notice. This publication supersedes and replaces all information previously supplied. STMicroelectronics products are not authorized for use as critical components in life support devices or systems without express written approval of STMicroelectronics.

© The ST logo is a registered trademark of STMicroelectronics

© 2001 STMicroelectronics - Printed in Italy - All Rights Reserved
STMicroelectronics GROUP OF COMPANIES
Australia - Brazil - China - Finland - France - Germany - Hong Kong - India - Italy - Japan - Malaysia - Malta - Morocco
Singapore - Spain - Sweden - Switzerland - United Kingdom
© http://www.st.com

Мы молодая и активно развивающаяся компания в области поставок электронных компонентов. Мы поставляем электронные компоненты отечественного и импортного производства напрямую от производителей и с крупнейших складов мира.

Благодаря сотрудничеству с мировыми поставщиками мы осуществляем комплексные и плановые поставки широчайшего спектра электронных компонентов.

Собственная эффективная логистика и склад в обеспечивает надежную поставку продукции в точно указанные сроки по всей России.

Мы осуществляем техническую поддержку нашим клиентам и предпродажную проверку качества продукции. На все поставляемые продукты мы предоставляем гарантию .

Осуществляем поставки продукции под контролем ВП МО РФ на предприятия военно-промышленного комплекса России , а также работаем в рамках 275 ФЗ с открытием отдельных счетов в уполномоченном банке. Система менеджмента качества компании соответствует требованиям ГОСТ ISO 9001.

Минимальные сроки поставки, гибкие цены, неограниченный ассортимент и индивидуальный подход к клиентам являются основой для выстраивания долгосрочного и эффективного сотрудничества с предприятиями радиоэлектронной промышленности, предприятиями ВПК и научно-исследовательскими институтами России.

С нами вы становитесь еще успешнее!

Наши контакты:

Телефон: +7 812 627 14 35

Электронная почта: sales@st-electron.ru

Адрес: 198099, Санкт-Петербург, Промышленная ул, дом № 19, литера Н, помещение 100-Н Офис 331