Features

- High-density, High-performance, Electrically-erasable Complex Programmable Logic Device
  - 128 Macrocells
  - 5 Product Terms per Macrocell, Expandable up to 40 per Macrocell
  - 84, 100, 160 Pins
  - 7.5 ns Maximum Pin-to-pin Delay
  - Registered Operation up to 125 MHz
  - Enhanced Routing Resources
- Flexible Logic Macrocell
  - D/T/Latch Configured Flip-flops
  - Global and Individual Register Control Signals
  - Global and Individual Output Enable
  - Programmable Output Slew Rate
  - Programmable Output Open Collector Option
  - Maximum Logic Utilization by Burying a Register within a COM Output
- Advanced Power Management Features
  - Automatic 10 µA Standby for "L" Version
  - Pin-controlled 1 mA Standby Mode
  - Programmable Pin-keeper Inputs and I/Os
  - Reduced-power Feature per Macrocell
- Available in Commercial and Industrial Temperature Ranges
- Available in 84-lead PLCC, 100-lead PQFP, 100-lead TQFP and 160-lead PQFP Packages
- Advanced EE Technology
  - 100% Tested
  - Completely Reprogrammable
  - 10,000 Program/Erase Cycles
  - 20-year Data Retention
  - 2000V ESD Protection
  - 200 mA Latch-up Immunity
- JTAG Boundary-scan Testing to IEEE Std. 1149.1-1990 and 1149.1a-1993 Supported
- Fast In-System Programmability (ISP) via JTAG
- PCI-compliant
- 3.3 or 5.0V I/O Pins
- Security Fuse Feature
- Green (Pb/Halide-free/RoHS Compliant) Package Options

Enhanced Features

- Improved Connectivity (Additional Feedback Routing, Alternate Input Routing)
- Output Enable Product Terms
- Transparent-latch Mode
- Combinatorial Output with Registered Feedback within Any Macrocell
- Three Global Clock Pins
- ITD (Input Transition Detection) Circuits on Global Clocks, Inputs and I/O
- Fast Registered Input from Product Term
- Programmable "Pin-keeper" Option
- V_{CC} Power-up Reset Option
- Pull-up Option on JTAG Pins TMS and TDI
- Advanced Power Management Features
  - Edge-controlled Power-down "L"
  - Individual Macrocell Power Option
  - Disable ITD on Global Clocks, Inputs and I/O for "Z" Parts

High-performance EE PLD

ATF1508AS
ATF1508ASL

Rev. 0784P–PLD–7/05

84-lead PLCC
Top View

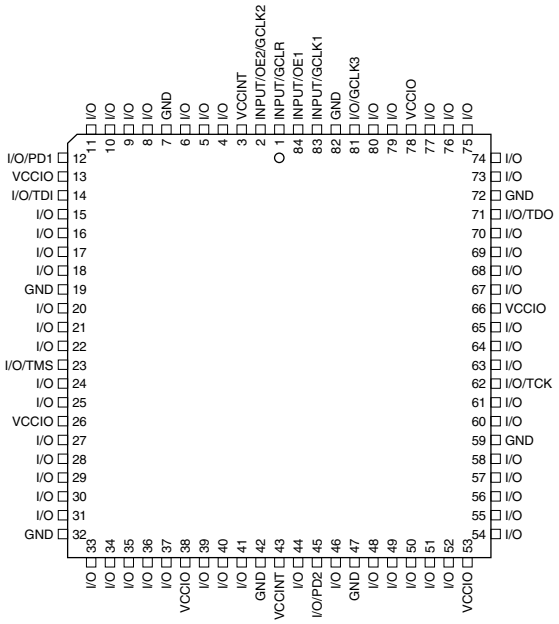

100-lead PQFP
Top View

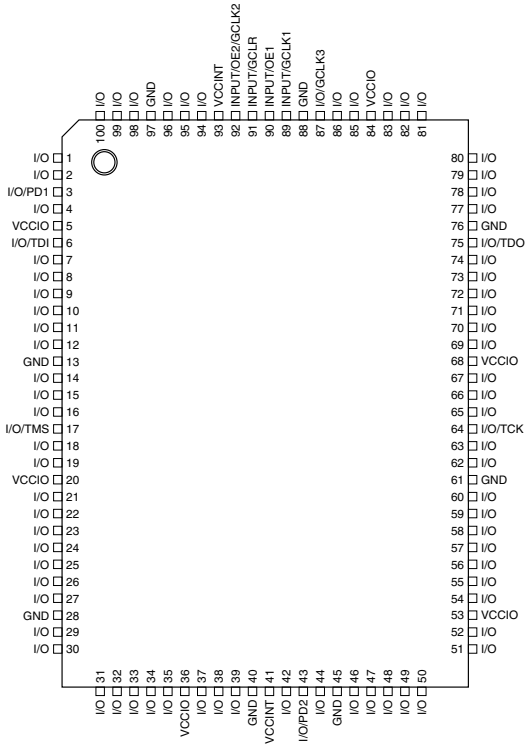

100-lead TQFP
Top View

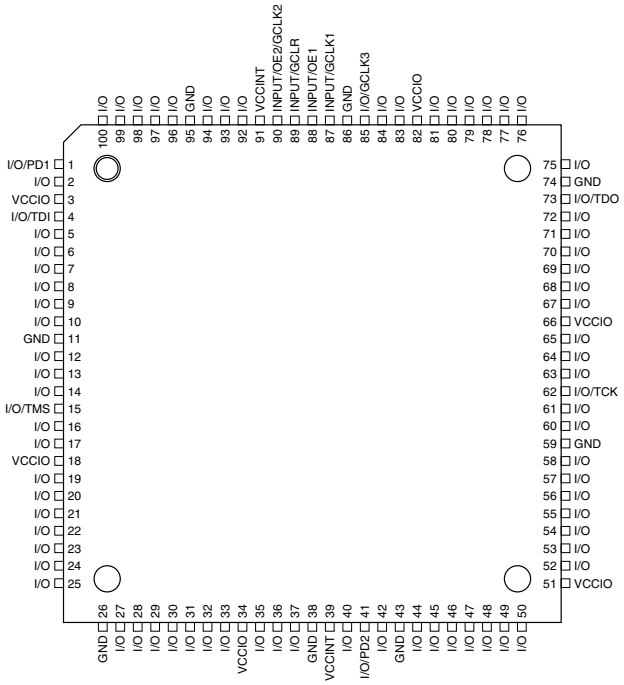

160-lead PQFP
Top View

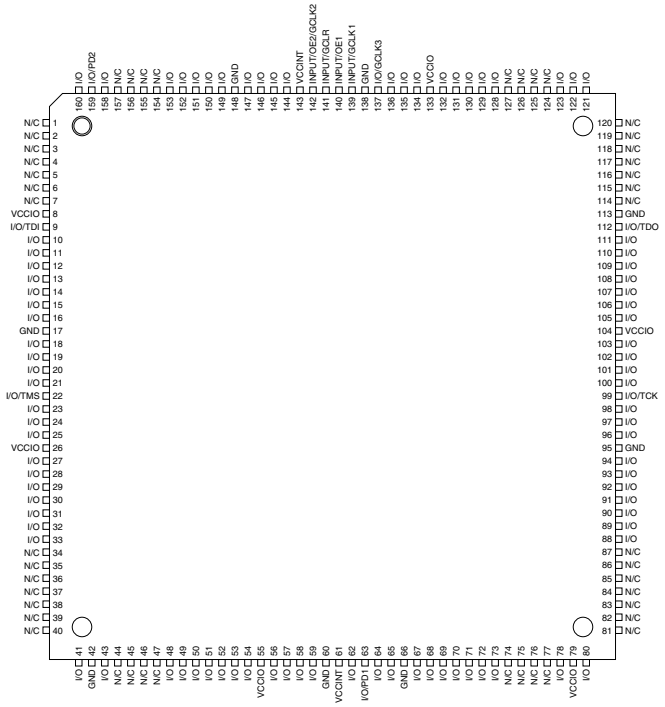

Block Diagram

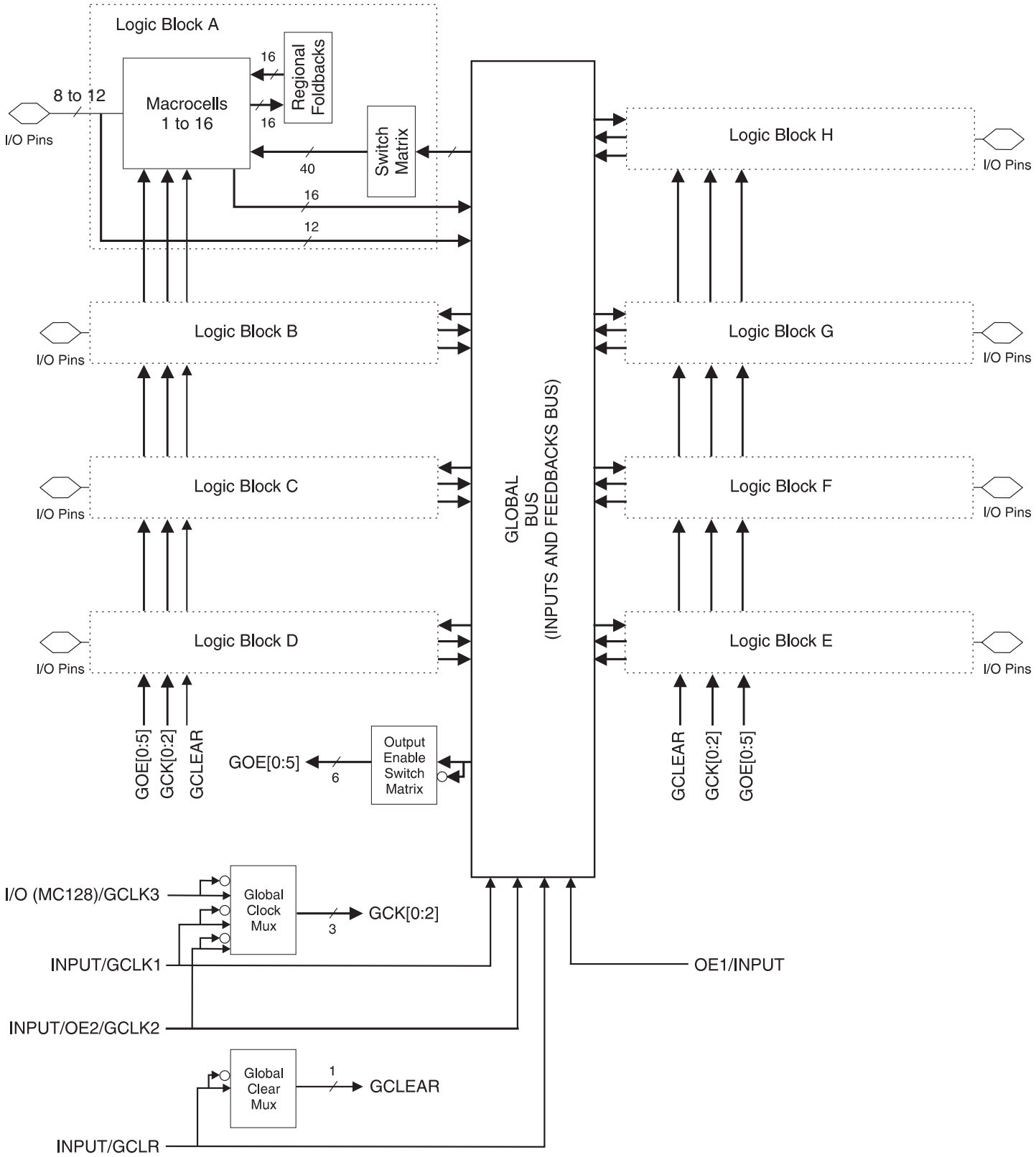

Description

The ATF1508AS is a high-performance, high-density complex programmable logic device (CPLD) that utilizes Atmel's proven electrically-erasable technology. With 128 logic macrocells and up to 100 inputs, it easily integrates logic from several TTL, SSI, MSI, LSI and classic PLDs. The ATF1508AS's enhanced routing switch matrices increase usable gate count and increase odds of successful pin-locked design modifications.

The ATF1508AS has up to 96 bi-directional I/O pins and four dedicated input pins, depending on the type of device package selected. Each dedicated pin can also serve as a global control signal, register clock, register reset or output enable. Each of these control signals can be selected for use individually within each macrocell.

Each of the 128 macrocells generates a buried feedback that goes to the global bus. Each input and I/O pin also feeds into the global bus. The switch matrix in each logic block then selects 40 individual signals from the global bus. Each macrocell also generates a foldback logic term that goes to a regional bus. Cascade logic between macrocells in the ATF1508AS allows fast, efficient generation of complex logic functions. The ATF1508AS contains eight such logic chains, each capable of creating sum term logic with a fan-in of up to 40 product terms.

The ATF1508AS macrocell, shown in Figure 1, is flexible enough to support highly-complex logic functions operating at high speed. The macrocell consists of five sections: product terms and product term select multiplexer; OR/XOR/CASCADE logic, a flip-flop, output select and enable, and logic array inputs.

Unused macrocells are automatically disabled by the compiler to decrease power consumption. A security fuse, when programmed, protects the contents of the ATF1508AS. Two bytes (16 bits) of User Signature are accessible to the user for purposes such as storing project name, part number, revision or date. The User Signature is accessible regardless of the state of the security fuse.

The ATF1508AS device is an in-system programmable (ISP) device. It uses the industry-standard 4-pin JTAG interface (IEEE Std. 1149.1), and is fully compliant with JTAG's Boundary-scan Description Language (BSDL). ISP allows the device to be programmed without removing it from the printed circuit board. In addition to simplifying the manufacturing flow, ISP also allows design modifications to be made in the field via software.

Product Terms and Select Mux

Each ATF1508AS macrocell has five product terms. Each product term receives as its inputs all signals from both the global bus and regional bus.

The product term select multiplexer (PTMUX) allocates the five product terms as needed to the macrocell logic gates and control signals. The PTMUX programming is determined by the design compiler, which selects the optimum macrocell configuration.

OR/XOR/ CASCADE Logic

The ATF1508AS's logic structure is designed to efficiently support all types of logic. Within a single macrocell, all the product terms can be routed to the OR gate, creating a 5-input AND/OR sum term. With the addition of the CASIN from neighboring macrocells, this can be expanded to as many as 40 product terms with a little small additional delay.

The macrocell's XOR gate allows efficient implementation of compare and arithmetic functions. One input to the XOR comes from the OR sum term. The other XOR input can be a product term or a fixed high- or low-level. For combinatorial outputs, the fixed level input allows polarity selection. For registered functions, the fixed levels allow DeMorgan minimization of product terms. The XOR gate is also used to emulate T- and JK-type flip-flops.

Flip-flop

The ATF1508AS's flip-flop has very flexible data and control functions. The data input can come from either the XOR gate, from a separate product term or directly from the I/O pin. Selecting the separate product term allows creation of a buried registered feedback within a combinatorial output macrocell. (This feature is automatically implemented by the fitter software). In addition to D, T, JK and SR operation, the flip-flop can also be configured as a flow-through latch. In this mode, data passes through when the clock is high and is latched when the clock is low.

The clock itself can be either the Global CLK Signal (GCK) or an individual product term. The flip-flop changes state on the clock's rising edge. When the GCK signal is used as the clock, one of the macrocell product terms can be selected as a clock enable. When the clock enable function is active and the enable signal (product term) is low, all clock edges are ignored. The flip-flop's asynchronous reset signal (AR) can be either the Global Clear (GCLEAR), a product term, or always off. AR can also be a logic OR of GCLEAR with a product term. The asynchronous preset (AP) can be a product term or always off.

Extra Feedback

The ATF15xxSE Family macrocell output can be selected as registered or combinatorial. The extra buried feedback signal can be either combinatorial or a registered signal regardless of whether the output is combinatorial or registered. (This enhancement function is automatically implemented by the fitter software.) Feedback of a buried combinatorial output allows the creation of a second latch within a macrocell.

I/O Control

The output enable multiplexer (MOE) controls the output enable signal. Each I/O can be individually configured as an input, output or for bi-directional operation. The output enable for each macrocell can be selected from the true or compliment of the two output enable pins, a subset of the I/O pins, or a subset of the I/O macrocells. This selection is automatically done by the fitter software when the I/O is configured as an input, all macrocell resources are still available, including the buried feedback, expander and cascade logic.

Global Bus/Switch Matrix

The global bus contains all input and I/O pin signals as well as the buried feedback signal from all 128 macrocells. The switch matrix in each logic block receives as its inputs all signals from the global bus. Under software control, up to 40 of these signals can be selected as inputs to the logic block.

Foldback Bus

Each macrocell also generates a foldback product term. This signal goes to the regional bus and is available to 16 macrocells. The foldback is an inverse polarity of one of the macrocell's product terms. The 16 foldback terms in each region allows generation of high fan-in sum terms (up to 21 product terms) with a little additional delay.

3.3V or 5.0V I/O Operation

The ATF1508AS device has two sets of V_{CC} pins viz, V_{CCINT} and V_{CCIO}. V_{CCINT} pins must always be connected to a 5.0V power supply. V_{CCINT} pins are for input buffers and are "compatible" with both 3.3V and 5.0V inputs. V_{CCIO} pins are for I/O output drives and can be connected for 3.3/5.0V power supply.

Open-collector Output Option

This option enables the device output to provide control signals such as an interrupt that can be asserted by any of the several devices.

Figure 1. ATF1508AS Macrocell

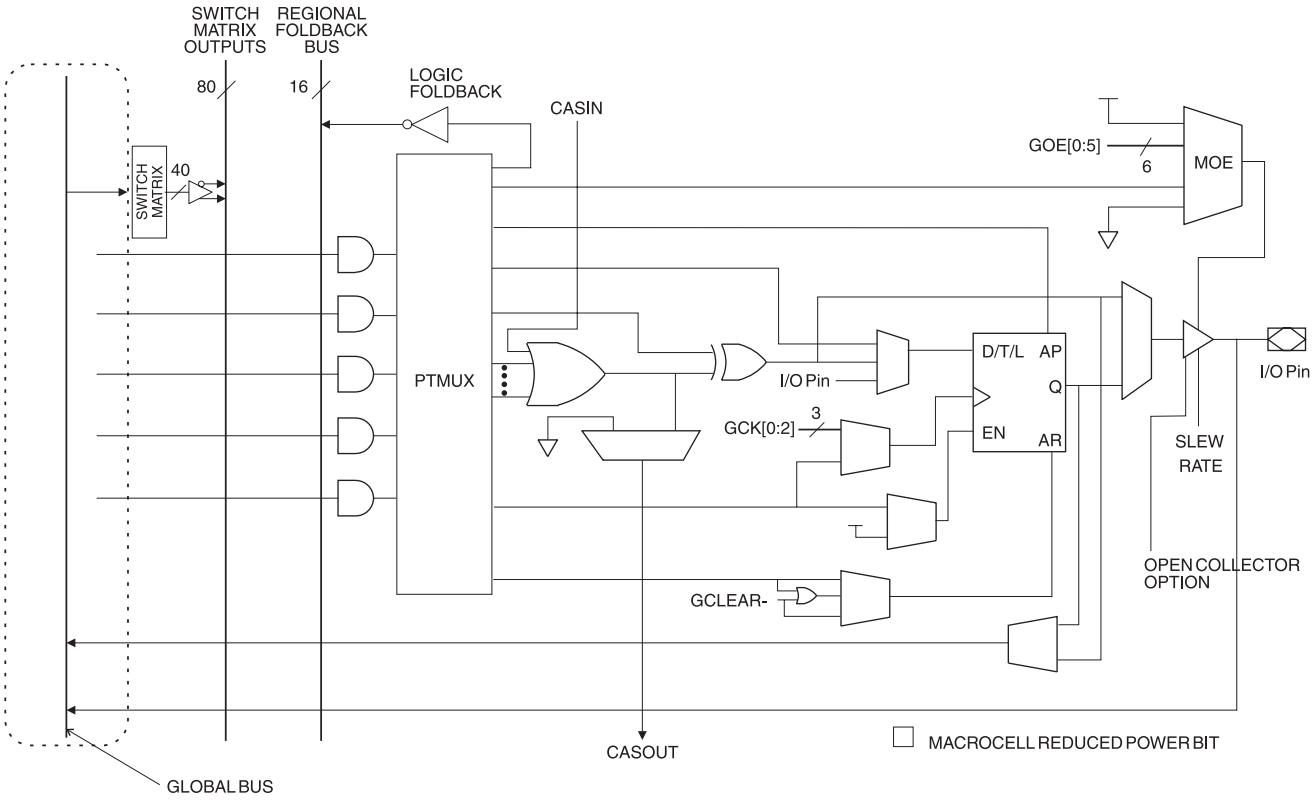

Programmable Pin-keeper Option for Inputs and I/Os

The ATF1508AS offers the option of programming all input and I/O pins so that “pin-keeper” circuits can be utilized. When any pin is driven high or low and then subsequently left floating, it will stay at that previous high- or low-level. This circuitry prevents unused input and I/O lines from floating to intermediate voltage levels, which causes unnecessary power consumption and system noise. The keeper circuits eliminate the need for external pull-up resistors and eliminate their DC power consumption.

Input Diagram

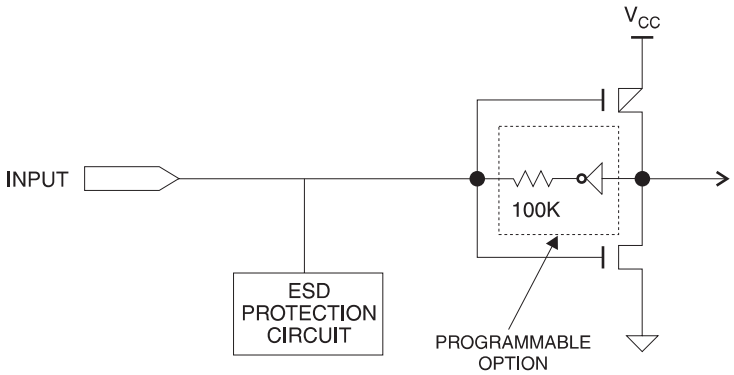

Speed/Power Management

The ATF1508AS has several built-in speed and power management features. The ATF1508AS contains circuitry that automatically puts the device into a low-power stand-by mode when no logic transitions are occurring. This not only reduces power consumption during inactive periods, but also provides proportional power-savings for most applications running at system speeds below 5 MHz.

To further reduce power, each ATF1508AS macrocell has a Reduced-power bit feature. This feature allows individual macrocells to be configured for maximum power savings. This feature may be selected as a design option.

I/O Diagram

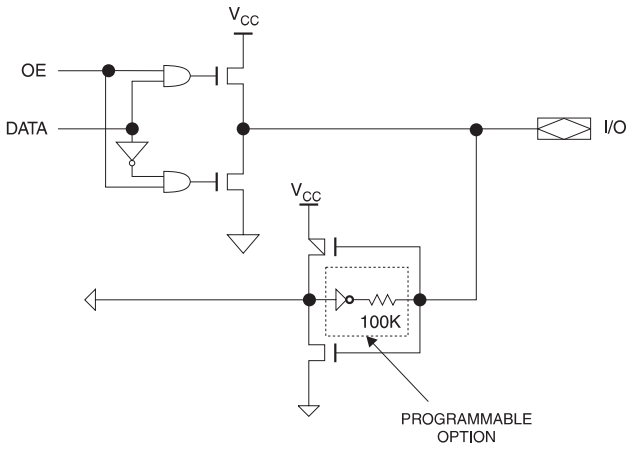

All ATF1508 also have an optional power-down mode. In this mode, current drops to below 10 mA. When the power-down option is selected, either PD1 or PD2 pins (or both) can be used to power down the part. The power-down option is selected in the design source file. When enabled, the device goes into power-down when either PD1 or PD2 is high. In the power-down mode, all internal logic signals are latched and held, as are any enabled outputs.

All pin transitions are ignored until the PD pin is brought low. When the power-down feature is enabled, the PD1 or PD2 pin cannot be used as a logic input or output. However, the pin's macrocell may still be used to generate buried foldback and cascade logic signals.

All power-down AC characteristic parameters are computed from external input or I/O pins, with Reduced-power Bit turned on. For macrocells in reduced-power mode (Reduced-power bit turned on), the reduced-power adder, tRPA, must be added to the AC parameters, which include the data paths t_{LAD}, t_{LAC}, t_{IC}, t_{ACL}, t_{ACH} and t_{SEXP}.

Each output also has individual slew rate control. This may be used to reduce system noise by slowing down outputs that do not need to operate at maximum speed. Outputs default to slow switching, and may be specified as fast switching in the design file.

Design Software Support

ATF1508AS designs are supported by several third-party tools. Automated fitters allow logic synthesis using a variety of high level description languages and formats.

Power-up Reset

The ATF1508AS is designed with a power-up reset, a feature critical for state machine initialization. At a point delayed slightly from V_{CC} crossing V_{RST}, all registers will be initialized, and the state of each output will depend on the polarity of its buffer. However, due to the asynchronous nature of reset and uncertainty of how V_{CC} actually rises in the system, the following conditions are required:

1. The V_{CC} rise must be monotonic,
2. After reset occurs, all input and feedback setup times must be met before driving the clock pin high, and,
3. The clock must remain stable during T_D.

The ATF1508AS has two options for the hysteresis about the reset level, V_{RST}, Small and Large. During the fitting process users may configure the device with the Power-up Reset hysteresis set to Large or Small. Atmel POF2JED users may select the Large option by including the flag “-power_reset” on the command line after “filename.POF”. To allow the registers to be properly reinitialized with the Large hysteresis option selected, the following condition is added:

4. If V_{CC} falls below 2.0V, it must shut off completely before the device is turned on again.

When the Large hysteresis option is active, I_{CC} is reduced by several hundred microamps as well.

Security Fuse Usage

A single fuse is provided to prevent unauthorized copying of the ATF1508AS fuse patterns. Once programmed, fuse verify is inhibited. However, User Signature and device ID remains accessible.

Programming

ATF1508AS devices are in-system programmable (ISP) devices utilizing the 4-pin JTAG protocol. This capability eliminates package handling normally required for programming and facilitates rapid design iterations and field changes.

Atmel provides ISP hardware and software to allow programming of the ATF1508AS via the PC. ISP is performed by using either a download cable or a comparable board tester or a simple microprocessor interface.

To allow ISP programming support by the Automated Test Equipment (ATE) vendors, Serial Vector Format (SVF) files can be created by the Atmel ISP Software. Conversion to other ATE tester format beside SVF is also possible

ATF1508AS devices can also be programmed using standard third-party programmers. With third-party programmer, the JTAG ISP port can be disabled thereby allowing four additional I/O pins to be used for logic.

Contact your local Atmel representatives or Atmel PLD applications for details.

ISP Programming Protection

The ATF1508AS has a special feature that locks the device and prevents the inputs and I/O from driving if the programming process is interrupted for any reason. The inputs and I/O default to high-Z state during such a condition. In addition the pin-keeper option preserves the former state during device programming.

All ATF1508AS devices are initially shipped in the erased state thereby making them ready to use for ISP.

Note: For more information refer to the “Designing for In-System Programmability with Atmel CPLDs” application note.

JTAG-BST Overview

The JTAG boundary-scan testing is controlled by the Test Access Port (TAP) controller in the ATF1508AS. The boundary-scan technique involves the inclusion of a shift-register stage (contained in a boundary-scan cell) adjacent to each component so that signals at component boundaries can be controlled and observed using scan testing principles. Each input pin and I/O pin has its own boundary-scan cell (BSC) in order to support boundary-scan testing. The ATF1508AS does not currently include a Test Reset (TRST) input pin because the TAP controller is automatically reset at power-up. The six JTAG BST modes supported include: SAMPLE/PRELOAD, EXTEST, BYPASS and IDCODE. BST on the ATF1508AS is implemented using the Boundary-scan Definition Language (BSDL) described in the JTAG specification (IEEE Standard 1149.1). Any third-party tool that supports the BSDL format can be used to perform BST on the ATF1508AS.

The ATF1508AS also has the option of using four JTAG-standard I/O pins for In-System programming (ISP). The ATF1508AS is programmable through the four JTAG pins using programming compatible with the IEEE JTAG Standard 1149.1. Programming is performed by using 5V TTL-level programming signals from the JTAG ISP interface. The JTAG feature is a programmable option. If JTAG (BST or ISP) is not needed, then the four JTAG control pins are available as I/O pins.

JTAG Boundary-scan Cell (BSC) Testing

The ATF1508AS contains up to 96 I/O pins and four input pins, depending on the device type and package type selected. Each input pin and I/O pin has its own boundary-scan cell (BSC) in order to support boundary-scan testing as described in detail by IEEE Standard 1149.1. A typical BSC consists of three capture registers or scan registers and up to two update registers. There are two types of BSCs, one for input or I/O pin, and one for the macrocells. The BSCs in the device are chained together through the (BST) capture registers. Input to the capture register chain is fed in from the TDI pin while the output is directed to the TDO pin. Capture registers are used to capture active device data signals, to shift data in and out of the device and to load data into the update registers. Control signals are generated internally by the JTAG TAP controller. The BSC configuration for the input and I/O pins and macrocells are shown below.

BSC Configuration Pins and Macrocells (Except JTAG TAP Pins)

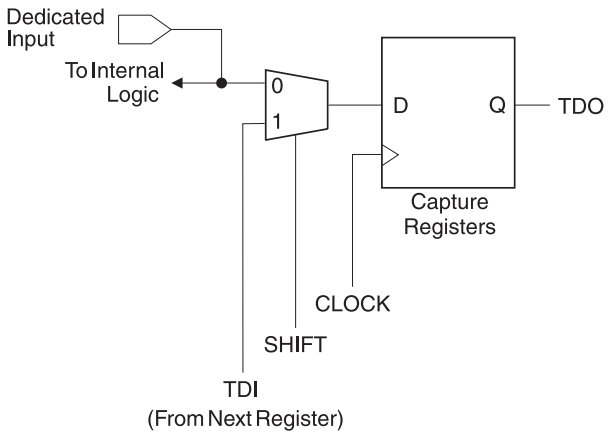

Note: The ATF1508AS has a pull-up option on TMS and TDI pins. This feature is selected as a design option.

BSC Configuration for Macrocell

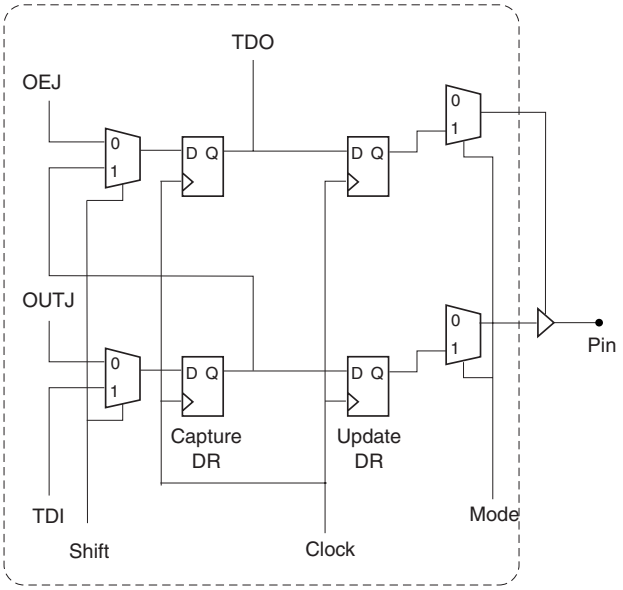

Macrocell BSC

Boundary Scan Definition Language (BSDL) Models for the ATF1508

These are now available in all package types via the Atmel Web Site. These models can be used for Boundary-scan Test Operation in the ATF1508AS and have been scheduled to conform to the IEEE 1149.1 standard.

PCI Compliance

The ATF1508AS also supports the growing need in the industry to support the new Peripheral Component Interconnect (PCI) interface standard in PCI-based designs and specifications. The PCI interface calls for high current drivers, which are much larger than the traditional TTL drivers.

PCI Voltage-to-current Curves for +5V Signaling in Pull-up Mode

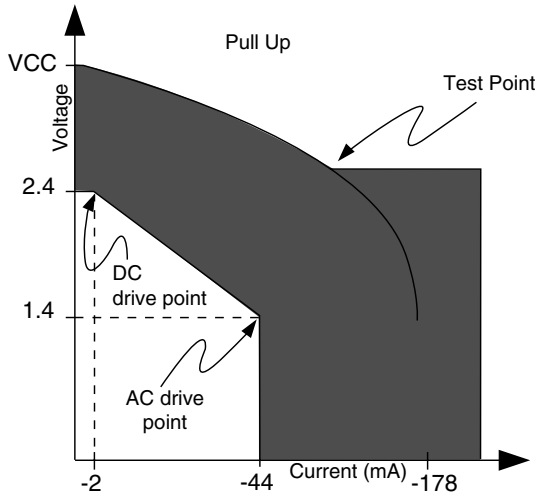

PCI Voltage-to-current Curves for +5V Signaling in Pull-down Mode

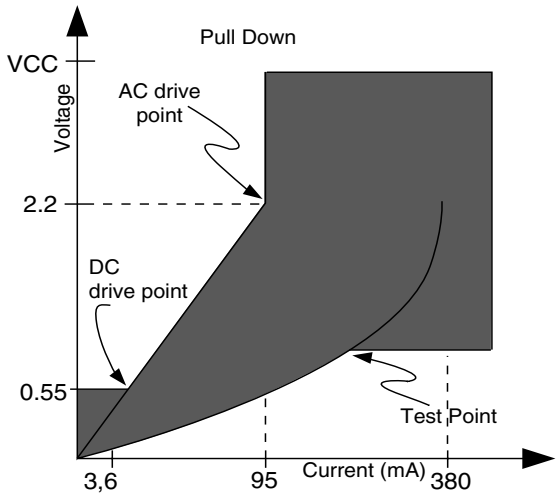

PCI DC Characteristics

Symbol	Parameter	Conditions	Min	Max	Units
V_{CC}	Supply Voltage		4.75	5.25	V
V_{IH}	Input High Voltage		2.0	V_{CC} + 0.5	V
V_{IL}	Input Low Voltage		-0.5	0.8	V
I_{IH}	Input High Leakage Current(1)	V_{IN} = 2.7V		70	µA
I_{IL}	Input Low Leakage Current(1)	V_{IN} = 0.5V		-70	µA
V_{OH}	Output High Voltage	I_{OUT} = -2 mA	2.4		V
V_{OL}	Output Low Voltage	I_{OUT} = 3 mA, 6 mA		0.55	V
C_{IN}	Input Pin Capacitance			10	pF
C_{CLK}	CLK Pin Capacitance			12	pF
C_{IDSEL}	IDSEL Pin Capacitance			8	pF
L_{PIN}	Pin Inductance			20	nH

Note: 1. Leakage current is without pin-keeper off.

PCI AC Characteristics

Symbol	Parameter	Conditions	Min	Max	Units
$I_{OH(AC)}$	Switching	$0 < V_{OUT} \leq 1.4$	-44		mA
	Current High	$1.4 < V_{OUT} < 2.4$	$-44+(V_{OUT} - 1.4)/0.024$		mA
		$3.1 < V_{OUT} < V_{CC}$		Equation A(1)	mA
	(Test High)	V_{OUT} = 3.1V		-142	µA
$I_{OL(AC)}$	Switching	$V_{OUT} > 2.2V$	95		mA
	Current Low	$2.2 > V_{OUT} > 0$	$V_{OUT}/0.023$		mA
		$0.1 > V_{OUT} > 0$		Equation B(2)	mA
	(Test Point)	V_{OUT} = 0.71		206	mA
I_{CL}	Low Clamp Current	$-5 < V_{IN} \leq -1$	$-25+(V_{IN} + 1)/0.015$		mA
$SLEW_R$	Output Rise Slew Rate	0.4V to 2.4V load	0.5	3.0	V/ns
$SLEW_F$	Output Fall Slew Rate	2.4V to 0.4V load	0.5	3.0	V/ns

Notes: 1. Equation A: $I_{OH} = 11.9 (V_{OUT} - 5.25) * (V_{OUT} + 2.45)$ for $V_{CC} > V_{OUT} > 3.1V$.
2. Equation B: $I_{OL} = 78.5 * V_{OUT} * (4.4 - V_{OUT})$ for $0V < V_{OUT} < 0.71V$.

Power-down Mode

The ATF1508AS includes two pins for optional pin-controlled power-down feature. When this mode is enabled, the PD pin acts as the power-down pin. When the PD1 and PD2 pin is high, the device supply current is reduced to less than 10 mA. During power-down, all output data and internal logic states are latched and held. Therefore, all registered and combinatorial output data remain valid. Any outputs that were in a high-Z state at the onset will remain at high-Z. During power-down, all input signals except the power-down pin are blocked. Input and I/O hold latches remain active to ensure that pins do not float to indeterminate levels, further reducing system power. The power-down pin feature is enabled in the logic design file. Designs using either power-down pin may not use the PD pin logic array input. However, buried logic resources in this macrocell may still be used.

Power-down AC Characteristics(1)(2)

Symbol	Parameter	-7		-10		-15		-20		-25		Units
		Min	Max	Min	Max	Min	Max	Min	Max	Min	Max	
t_{IVDH}	Valid I, I/O before PD High	7		10		15		20		25		ns
t_{GVDH}	Valid OE(2) before PD High	7		10		15		20		25		ns
t_{CVDH}	Valid Clock(2) before PD High	7		10		15		20		25		ns
t_{DHIX}	I, I/O Don't Care after PD High		12		15		25		30		35	ns
t_{DHGX}	OE(2) Don't Care after PD High		12		15		25		30		35	ns
t_{DHCX}	Clock(2) Don't Care after PD High		12		15		25		30		35	ns
t_{DLIV}	PD Low to Valid I, I/O		1		1		1		1		1	µs
t_{DLGV}	PD Low to Valid OE (Pin or Term)		1		1		1		1		1	µs
t_{DLCV}	PD Low to Valid Clock (Pin or Term)		1		1		1		1		1	µs
t_{DLOV}	PD Low to Valid Output		1		1		1		1		1	µs

Notes: 1. For slow slew outputs, add t_{SSO}.
2. Pin or product term.

Absolute Maximum Ratings*

Temperature Under Bias..... -40°C to +85°C

Storage Temperature..... -65°C to +150°C

Voltage on Any Pin with
Respect to Ground .....-2.0V to +7.0V(1)

Voltage on Input Pins
with Respect to Ground
During Programming.....-2.0V to +14.0V(1)

Programming Voltage with
Respect to Ground .....-2.0V to +14.0V(1)

*NOTICE: Stresses beyond those listed under "Absolute Maximum Ratings" may cause permanent damage to the device. This is a stress rating only and functional operation of the device at these or any other conditions beyond those indicated in the operational sections of this specification is not implied. Exposure to absolute maximum rating conditions for extended periods may affect device reliability.

Note: 1. Minimum voltage is -0.6V DC, which may undershoot to -2.0V for pulses of less than 20 ns. Maximum output pin voltage is V_{CC} + 0.75V DC, which may overshoot to 7.0V for pulses of less than 20 ns.

DC and AC Operating Conditions

	Commercial	Industrial
Operating Temperature (Ambient)	0°C - 70°C	-40°C - 85°C
V_{CCINT} or V_{CCIO} (5V) Power Supply	5V ± 5%	5V ± 10%
V_{CCIO} (3.3V) Power Supply	2.7V - 3.6V	2.7V - 3.6V

DC Characteristics(1)

Symbol	Parameter	Condition			Min	Typ	Max	Units
I_{IL}	Input or I/O Low Leakage Current	$V_{IN} = V_{CC}$				-2	-10	µA
I_{IH}	Input or I/O High Leakage Current					2	10	µA
I_{OZ}	Tri-state Output Off-state Current	$V_O = V_{CC}$ or GND			-40		40	µA
I_{CC1}	Power Supply Current, Standby	V_{CC} = Max V_{IN} = 0, V_{CC}	Std Mode	Com.		160		mA
				Ind.		180		mA
			"L" Mode	Com.		10		µA
				Ind.		10		µA
I_{CC2}	Power Supply Current, Power-down Mode	V_{CC} = Max V_{IN} = 0, V_{CC}	"PD" Mode			1	10	mA
I_{CC3}(2)	Reduced-power Mode Supply Current	V_{CC} = Max V_{IN} = 0, V_{CC}	Std Mode	Com.		65		mA
				Ind.		85		mA
V_{CCIO}	Supply Voltage	5.0V Device Output		Com.	4.75		5.25	V
				Ind.	4.5		5.5	V
V_{CCIO}	Supply Voltage	3.3V Device Output			3.0		3.6	V
V_{IL}	Input Low Voltage				-0.3		0.8	V
V_{IH}	Input High Voltage				2.0		V_{CCIO} + 0.3	V
V_{OL}	Output Low Voltage (TTL)	$V_{IN} = V_{IH}$ or V_{IL} V_{CCIO} = MIN, I_{OL} = 12 mA		Com.			0.45	V
				Ind.			0.45	V
	Output Low Voltage (CMOS)	$V_{IN} = V_{IH}$ or V_{IL} V_{CC} = MIN, I_{OL} = 0.1 mA		Com.			0.2	V
				Ind.			0.2	V
V_{OH}	Output High Voltage (TTL)	$V_{IN} = V_{IH}$ or V_{IL} V_{CCIO} = MIN, I_{OH} = -4.0 mA			2.4			V

Notes: 1. Not more than one output at a time should be shorted. Duration of short circuit test should not exceed 30 sec.
2. I_{CC3} refers to the current in the reduced-power mode when macrocell reduced-power is turned ON.

Pin Capacitance(1)

	Typ	Max	Units	Conditions
C_{IN}	8	10	pF	V_{IN} = 0V; f = 1.0 MHz
$C_{I/O}$	8	10	pF	V_{OUT} = 0V; f = 1.0 MHz

Note: 1. Typical values for nominal supply voltage. This parameter is only sampled and is not 100% tested. The OGI pin (high-voltage pin during programming) has a maximum capacitance of 12 pF.

Timing Model

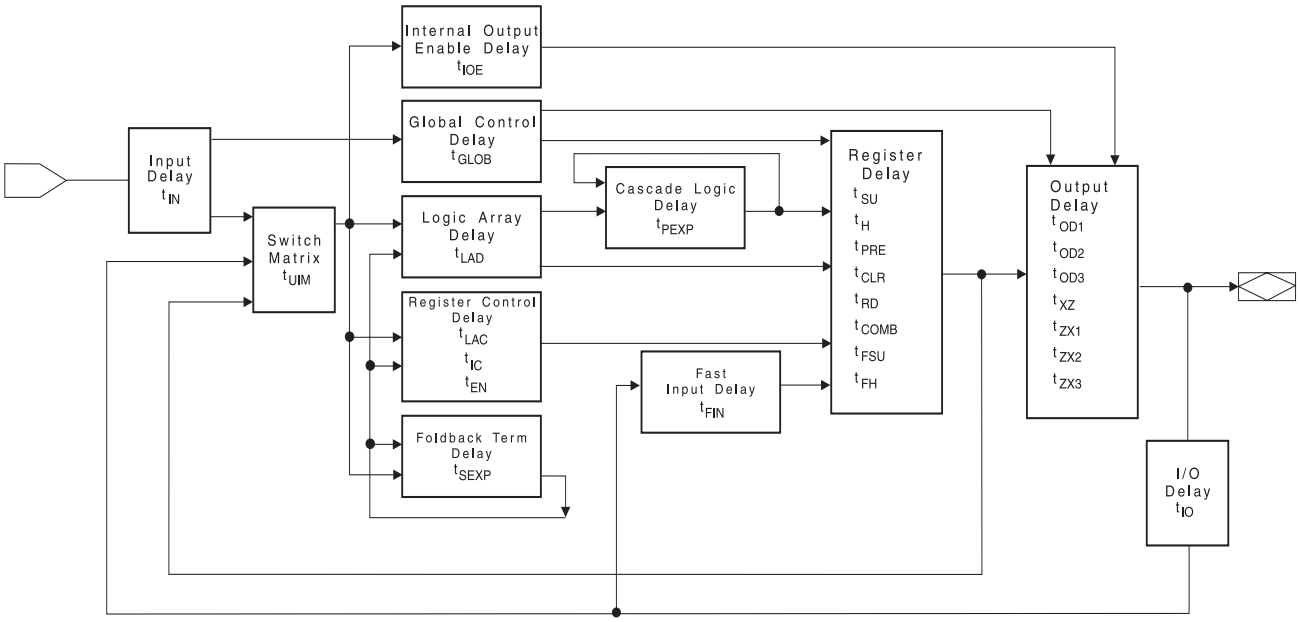

Input Test Waveforms and Measurement Levels

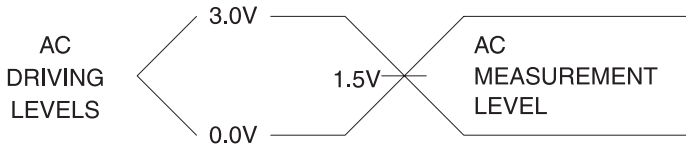

r_R, t_F = 1.5 ns typical

Output AC Test Loads

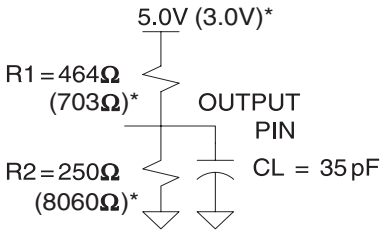

Note: *Numbers in parenthesis refer to 3.0V operating conditions (preliminary).

SUPPLY CURRENT VS. SUPPLY VOLTAGE
(T_A = 25°C, F = 0)

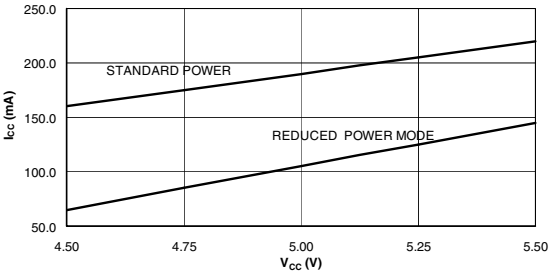

SUPPLY CURRENT VS. FREQUENCY
LOW-POWER ("L") VERSION
(T_A = 25°C)

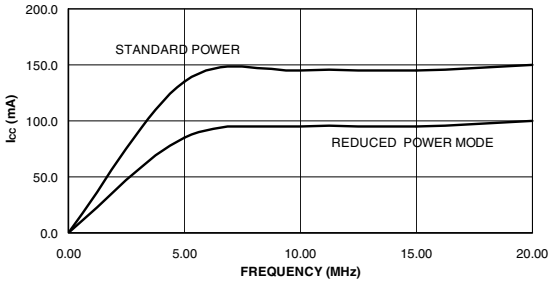

SUPPLY CURRENT VS. SUPPLY VOLTAGE
LOW-POWER ("L") VERSION
(T_A = 25°C, F = 0)

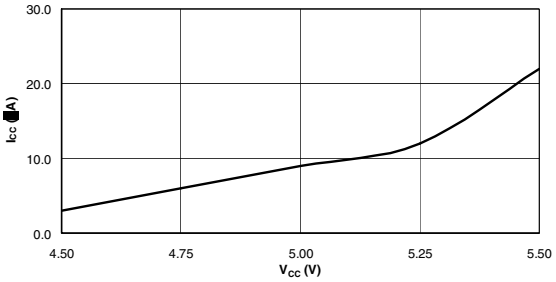

OUTPUT SOURCE CURRENT
VS. SUPPLY VOLTAGE (VOH = 2.4V, T_A = 25°C)

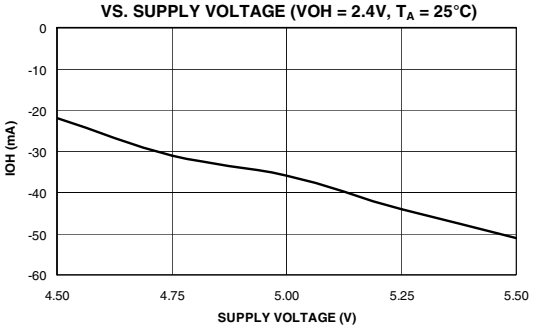

SUPPLY CURRENT VS. FREQUENCY
STANDARD POWER
(T_A = 25°C, F = 0)

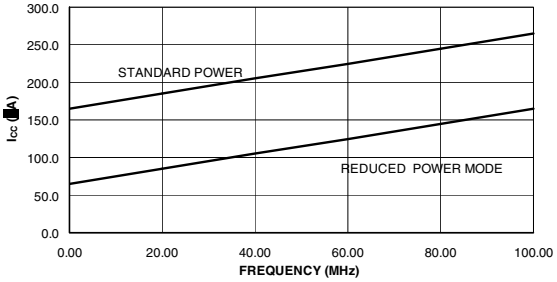

INPUT CLAMP CURRENT
VS. INPUT VOLTAGE (V_{CC} = 5V, T_A = 25°C)

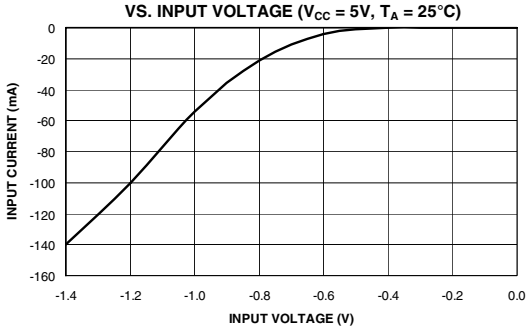

SUPPLY CURRENT VS. SUPPLY VOLTAGE
PIN-CONTROLLED POWER-DOWN MODE
(T_A = 25°C, F = 0)

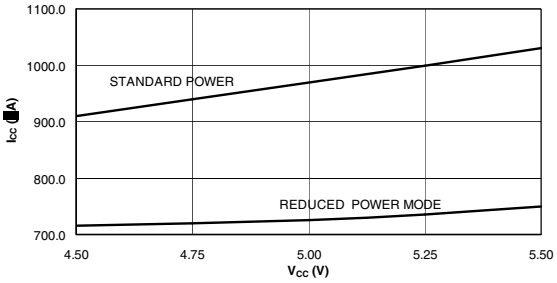

OUTPUT SINK CURRENT
VS. SUPPLY VOLTAGE (VOL = 0.5V, T_A = 25°C)

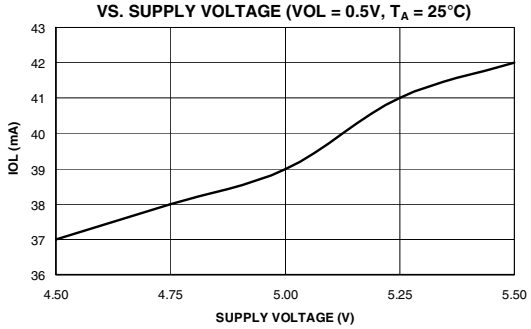

OUTPUT SOURCE CURRENT
VS. SUPPLY VOLTAGE (V_{CC} = 5V, T_A = 25°C)

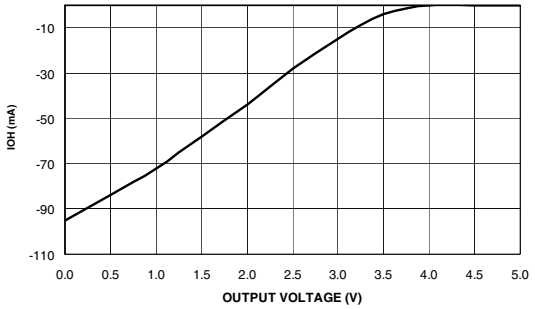

NORMALIZED TCO
VS. SUPPLY VOLTAGE (T_A = 25°C)

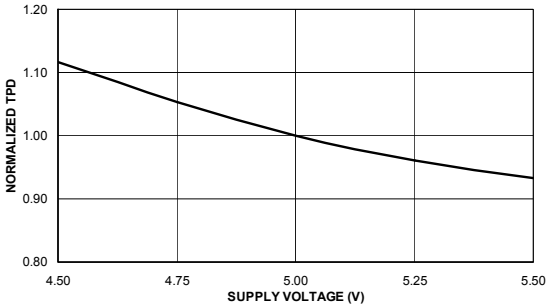

INPUT CURRENT
VS. INPUT VOLTAGE (V_{CC} = 5V, T_A = 25°C)

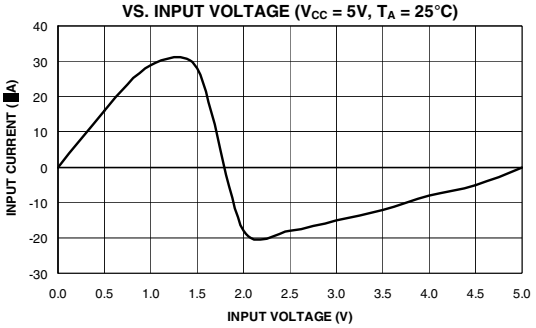

NORMALIZED TSU
VS. SUPPLY VOLTAGE (T_A = 25°C)

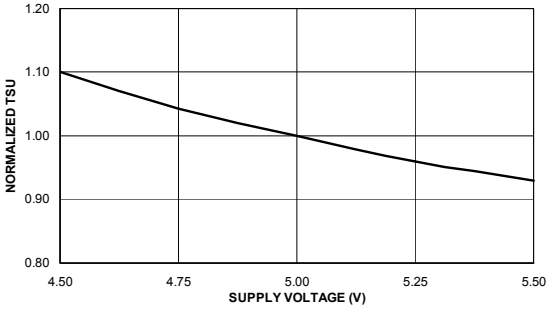

OUTPUT SINK CURRENT
VS. OUTPUT VOLTAGE (V_{CC} = 5V, T_A = 25°C)

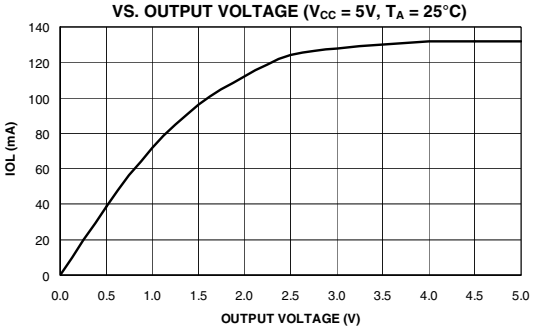

NORMALIZED TPD
VS. TEMPERATURE (V_{CC} = 5.0V)

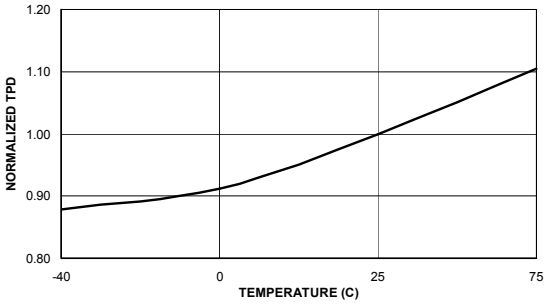

NORMALIZED TPD
VS. SUPPLY VOLTAGE (T_A = 25°C)

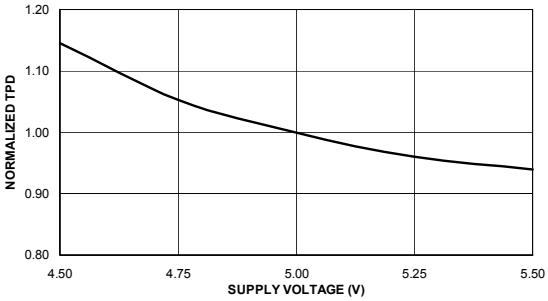

NORMALIZED TCO
VS. TEMPERATURE (V_{CC} = 5.0V)

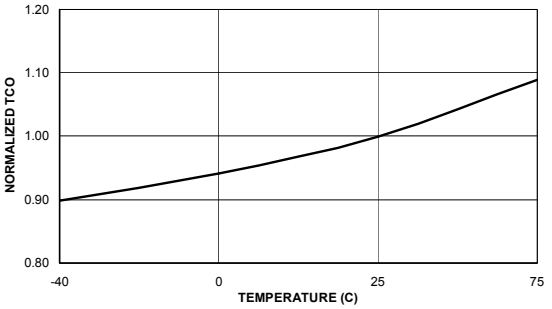

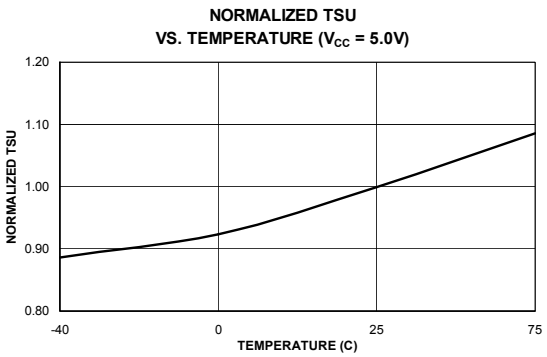
NORMALIZED TSU
VS. TEMPERATURE (V_{CC} = 5.0V)
1.20
1.10
1.00
0.90
0.80
NORMALIZED TSU
-40
0
25
75
TEMPERATURE (C)

AC Characteristics (1)

Symbol	Parameter	-7		-10		-15		-20		-25		Units
		Min	Max	Min	Max	Min	Max	Min	Max	Min	Max	
t_{PD1}	Input or Feedback to Non-registered Output		7.5		10	3	15		20		25	ns
t_{PD2}	I/O Input or Feedback to Non-registered Feedback		7		9	3	12		16		20	ns
t_{SU}	Global Clock Setup Time	6		7		11		16		20		ns
t_{H}	Global Clock Hold Time	0		0		0		0		0		ns
t_{FSU}	Global Clock Setup Time of Fast Input	3		3		3		3		3		ns
t_{FH}	Global Clock Hold Time of Fast Input	0.5		0.5		1.0		1.5		2		MHz
t_{COP}	Global Clock to Output Delay		4.5		5		8		10		13	ns
t_{CH}	Global Clock High Time	3		4		5		6		7		ns
t_{CL}	Global Clock Low Time	3		4		5		6		7		ns
t_{ASU}	Array Clock Setup Time	3		3		4		4		5		ns
t_{AH}	Array Clock Hold Time	2		3		4		5		6		ns
t_{ACOP}	Array Clock Output Delay		7.5		10		15		20		25	ns
t_{ACH}	Array Clock High Time	3		4		6		8		10		ns
t_{ACL}	Array Clock Low Time	3		4		6		8		10		ns
t_{CNT}	Minimum Clock Global Period		8		10		13		17		22	ns
f_{CNT}	Maximum Internal Global Clock Frequency	125		100		76.9		66		50		MHz
t_{ACNT}	Minimum Array Clock Period		8		10		13		17		22	ns
f_{ACNT}	Maximum Internal Array Clock Frequency	125		100		76.9		66		50		MHz
f_{MAX}	Maximum Clock Frequency	166.7		125		100		41.7		33.3		MHz
t_{IN}	Input Pad and Buffer Delay		0.5		0.5		2		2		2	ns
t_{IO}	I/O Input Pad and Buffer Delay		0.5		0.5		2		2		2	ns
t_{FIN}	Fast Input Delay		1		1		2		2		2	ns
t_{SEXP}	Foldback Term Delay		4		5		8		10		12	ns
t_{PEXP}	Cascade Logic Delay		0.8		0.8		1		1		1.2	ns
t_{LAD}	Logic Array Delay		3		5		6		7		8	ns
t_{LAC}	Logic Control Delay		3		5		6		7		8	ns
t_{IOE}	Internal Output Enable Delay		2		2		3		3		4	ns
t_{OD1}	Output Buffer and Pad Delay (Slow slew rate = OFF; V_{CCIO} = 5V; C_L = 35 pF)		2		1.5		4		5		6	ns

AC Characteristics (Continued)[1]

Symbol	Parameter	-7		-10		-15		-20		-25		Units
		Min	Max	Min	Max	Min	Max	Min	Max	Min	Max	
t_{OD2}	Output Buffer and Pad Delay (Slow slew rate = OFF; V_{CCIO} = 3.3V; C_L = 35 pF)		2.5		2.0		5		6		7	ns
t_{OD3}	Output Buffer and Pad Delay (Slow slew rate = ON; V_{CCIO} = 5V or 3.3V; C_L = 35 pF)		5		5.5		8		10		12	ns
t_{ZX1}	Output Buffer Enable Delay (Slow slew rate = OFF; V_{CCIO} = 5.0V; C_L = 35 pF)		4.0		5.0		7		9		10	ns
t_{ZX2}	Output Buffer Enable Delay (Slow slew rate = OFF; V_{CCIO} = 3.3V; C_L = 35 pF)		4.5		5.5		7		9		10	ns
t_{ZX3}	Output Buffer Enable Delay (Slow slew rate = ON; V_{CCIO} = 5.0V/3.3V; C_L = 35 pF)		9		9		10		11		12	ns
t_{XZ}	Output Buffer Disable Delay (C_L = 5 pF)		4		5		6		7		8	ns
t_{SU}	Register Setup Time	3		2		4		5		6		ns
t_H	Register Hold Time	2		3		4		5		6		ns
t_{FSU}	Register Setup Time of Fast Input	3		3		2		2		3		ns
t_{FH}	Register Hold Time of Fast Input	0.5		0.5		2		2		2.5		ns
t_{RD}	Register Delay		1		2		1		2		2	ns
t_{COMB}	Combinatorial Delay		1		2		1		2		2	ns
t_{IC}	Array Clock Delay		3		5		6		7		8	ns
t_{EN}	Register Enable Time		3		5		6		7		8	ns
t_{GLOB}	Global Control Delay		1		1		1		1		1	ns
t_{PRE}	Register Preset Time		2		3		4		5		6	ns
t_{CLR}	Register Clear Time		2		3		4		5		6	ns
t_{UIM}	Switch Matrix Delay		1		1		2		2		2	ns
t_{RPA}	Reduced-power Adder[2]		10		11		13		14		15	ns

Notes: 1. See ordering information for valid part numbers.
2. The t_{RPA} parameter must be added to the t_{LAD}, t_{LAC},t_{TIC}, t_{ACL}, and t_{SEXP} parameters for macrocells running in the reduced-power mode.

ATF1508AS Dedicated Pinouts

Dedicated Pin	84-lead J-lead	100-lead PQFP	100-lead TQFP	160-lead PQFP
INPUT/OE2/GCLK2	2	92	90	142
INPUT/GCLR	1	91	89	141
INPUT/OE1	84	90	88	140
INPUT/GCLK1	83	89	87	139
I/O /GCLK3	81	87	85	137
I/O / PD (1, 2)	12,45	3,43	1,41	63,159
I/O / TDI(JTAG)	14	6	4	9
I/O / TMS(JTAG)	23	17	15	22
I/O / TCK(JTAG)	62	64	62	99
I/O / TDO(JTAG)	71	75	73	112
GND	7,19,32,42, 47,59,72,82	13,28,40,45, 61,76,88,97	11,26,38,43, 59,74,86,95	17,42,60,66,95, 113,138,148
VCCINT	3,43	41,93	39,91	61,143
VCCIO	13,26,38, 53,66,78	5,20,36,53,68,84	3,18,34,51,66,82	8,26,55,79,104,133
N/C	–	–	–	1,2,3,4,5,6,7,34,35,36, 37,38,39,40,44,45,46, 47,74,75,76,77,81,82, 83,84,85,86,87,114, 115,116,117,118,119, 120,124,125,126,127, 154,155,156,157
# of SIGNAL PINS	68	84	84	100
# USER I/O PINS	64	80	80	96

OE (1, 2)	Global OE Pins
GCLR	Global Clear Pin
GCLK (1, 2, 3)	Global Clock Pins
PD (1, 2)	Power-down pins
TDI, TMS, TCK, TDO	JTAG pins used for boundary scan testing or in-system programming
GND	Ground Pins
VCCINT	VCC pins for the device (+5V - Internal)
VCCIO	VCC pins for output drivers (for I/O pins) (+5V or 3.3V - I/Os)

ATF1508AS I/O Pinouts

MC	PLB	84-lead J-lead	100-lead PQFP	100-lead TQFP	160-lead PQFP	MC	PLB	84-lead J-lead	100-lead PQFP	100-lead TQFP	160-lead PQFP
1	A	–	4	2	160	33	C	–	27	25	41
2	A	–	–	–	–	34	C	–	–	–	–
3	A/ **PD1**	12	3	1	159	35	C	31	26	24	33
4	A	–	–	–	158	36	C	–	–	–	32
5	A	11	2	100	153	37	C	30	25	23	31
6	A	10	1	99	152	38	C	29	24	22	30
7	A	–	–	–	–	39	C	–	–	–	–
8	A	9	100	98	151	40	C	28	23	21	29
9	A	–	99	97	150	41	C	–	22	20	28
10	A	–	–	–	–	42	C	–	–	–	–
11	A	8	98	96	149	43	C	27	21	19	27
12	A	–	–	–	147	44	C	–	–	–	25
13	A	6	96	94	146	45	C	25	19	17	24
14	A	5	95	93	145	46	C	24	18	16	23
15	A	–	–	–	–	47	C	–	–	–	–
16	A	4	94	92	144	48	C/ **TMS**	23	17	15	22
17	B	22	16	14	21	49	D	41	39	37	59
18	B	–	–	–	–	50	D	–	–	–	–
19	B	21	15	13	20	51	D	40	38	36	58
20	B	–	–	–	19	52	D	–	–	–	57
21	B	20	14	12	18	53	D	39	37	35	56
22	B	–	12	10	16	54	D	–	35	33	54
23	B	–	–	–	–	55	D	–	–	–	–
24	B	18	11	9	15	56	D	37	34	32	53
25	B	17	10	8	14	57	D	36	33	31	52
26	B	–	–	–	–	58	D	–	–	–	–
27	B	16	9	7	13	59	D	35	32	30	51
28	B	–	–	–	12	60	D	–	–	–	50
29	B	15	8	6	11	61	D	34	31	29	49
30	B	–	7	5	10	62	D	–	30	28	48
31	B	–	–	–	–	63	D	–	–	–	–
32	B/ **TDI**	14	6	4	9	64	D	33	29	27	43
65	E	44	42	40	62	97	G	63	65	63	100

ATF1508AS I/O Pinouts (Continued)

MC	PLB	84-lead J-lead	100-lead PQFP	100-lead TQFP	160-lead PQFP	MC	PLB	84-lead J-lead	100-lead PQFP	100-lead TQFP	160-lead PQFP
66	E	–	–	–	–	98	G	–	–	–	–
67	E/ **PD2**	45	43	41	63	99	G	64	66	64	101
68	E	–	–	–	64	100	G	–	–	–	102
69	E	46	44	42	65	101	G	65	67	65	103
70	E	–	46	44	67	102	G	–	69	67	105
71	E	–	–	–	–	103	G	–	–	–	–
72	E	48	47	45	68	104	G	67	70	68	106
73	E	49	48	46	69	105	G	68	71	69	107
74	E	–	–	–	–	106	G	–	–	–	–
75	E	50	49	47	70	107	G	69	72	70	108
76	E	–	–	–	71	108	G	–	–	–	109
77	E	51	50	48	72	109	G	70	73	71	110
78	E	–	51	49	73	110	G	–	74	72	111
79	E	–	–	–	–	111	G	–	–	–	–
80	E	52	52	50	78	112	G/ **TDO**	71	75	73	112
81	F	–	54	52	80	113	H	–	77	75	121
82	F	–	–	–	–	114	H	–	–	–	–
83	F	54	55	53	88	115	H	73	78	76	122
84	F	–	–	–	89	116	H	–	–	–	123
85	F	55	56	54	90	117	H	74	79	77	128
86	F	56	57	55	91	118	H	75	80	78	129
87	F	–	–	–	–	119	H	–	–	–	–
88	F	57	58	56	92	120	H	76	81	79	130
89	F	–	59	57	93	121	H	–	82	80	131
90	F	–	–	–	–	122	H	–	–	–	–
91	F	58	60	58	94	123	H	77	83	81	132
92	F	–	–	–	96	124	H	–	–	–	134
93	F	60	62	60	97	125	H	79	85	83	135
94	F	61	63	61	98	126	H	80	86	84	136
95	F	–	–	–	–	127	H	–	–	–	–
96	F/ **TCK**	62	64	62	99	128	H/ **GCLK3**	81	87	85	137

Ordering Information

ATF1508AS Standard Package Options

t_{PD} (ns)	t_{CO1} (ns)	f_{MAX} (MHz)	Ordering Code	Package	Operation Range
7.5	4.5	166.7	ATF1508AS-7 JC84 ATF1508AS-7 QC100 ATF1508AS-7 AC100 ATF1508AS-7 QC160	84J 100Q1 100A 160Q1	Commercial (0°C to 70°C)
10	5	125	ATF1508AS-10 JC84 ATF1508AS-10 QC100 ATF1508AS-10 AC100 ATF1508AS-10 QC160	84J 100Q1 100A 160Q1	Commercial (0°C to 70°C)
10	5	125	ATF1508AS-10 JI84 ATF1508AS-10 QI100 ATF1508AS-10 AI100 ATF1508AS-10 QI160	84J 100Q1 100A 160Q1	Industrial (-40°C to +85°C)
15	5	100	ATF1508AS-15 JC84 ATF1508AS-15 QC100 ATF1508AS-15 AC100 ATF1508AS-15 QC160	84J 100Q1 100A 160Q1	Commercial (0°C to 70°C)
15	8	100	ATF1508AS-15 JI84 ATF1508AS-15 QI100 ATF1508AS-15 AI100 ATF1508AS-15 QI160	84J 100Q1 100A 160Q1	Industrial (-40°C to +85°C)

Notes: 1. The last time buy is Sept. 30, 2005 for shaded parts.
2. The recommended replacement package for QC160 is the AU100.

Using "C" Product for Industrial

To use commercial product for Industrial temperature ranges, down-grade one speed grade from the "I" to the "C" device (7 ns "C" = 10 ns "I") and de-rate power by 30%.

ATF1508AS Green Package Options (Pb/Halide-free/RoHS Compliant)

t_{PD} (ns)	t_{CO1} (ns)	f_{MAX} (MHz)	Ordering Code	Package	Operation Range
7.5	4.5	166.7	ATF1508AS-7 JX84 ATF1508AS-7 AX100	84J 100A	Commercial (0°C to 70°C)
10	5	125	ATF1508AS-10 JU84 ATF1508AS-10 QU100 ATF1508AS-10 AU100	84J 100Q1 100A	Industrial (-40°C to +85°C)

Package Type	
84J	84-lead, Plastic J-leaded Chip Carrier (PLCC)
100Q1	100-lead, Plastic Quad Pin Flat Package (PQFP)
100A	100-lead, Very Thin Plastic Gull Wing Quad Flat Package (TQFP)
160Q1	160-lead, Plastic Quad Pin Flat Package (PQFP)

ATF1508ASL Standard Package Options

t_{PD} (ns)	t_{CO1} (ns)	f_{MAX} (MHz)	Ordering Code	Package	Operation Range
20	12	83.3	ATF1508ASL-20 JC84	84J	Commercial (0°C to 70°C)
			ATF1508ASL-20 QC100	100Q1	
			ATF1508ASL-20 AC100	100A	
			ATF1508ASL-20 QC160	160Q1	
25	15	70	ATF1508ASL-25 JI84	84J	Industrial (-40°C to +85°C)
			ATF1508ASL-25 QI100	100Q1	
			ATF1508ASL-25 AI100	100A	
			ATF1508ASL-25 QI160	160Q1	

Note: 1. The last time buy is Sept. 30, 2005 for shaded parts.

Using “C” Product for Industrial

To use commercial product for Industrial temperature ranges, down-grade one speed grade from the “I” to the “C” device (7 ns “C” = 10 ns “I”) and de-rate power by 30%.

ATF1508ASL Green Package Options (Pb/Halide-free/RoHS Compliant)

t_{PD} (ns)	t_{CO1} (ns)	f_{MAX} (MHz)	Ordering Code	Package	Operation Range
25	15	70	ATF1508ASL-25 JU84 ATF1508ASL-25 AU100	84J 100A	Industrial (-40°C to +85°C)

Package Type	
84J	84-lead, Plastic J-leaded Chip Carrier (PLCC)
100Q1	100-lead, Plastic Quad Pin Flat Package (PQFP)
100A	100-lead, Very Thin Plastic Gull Wing Quad Flat Package (TQFP)
160Q1	160-lead, Plastic Quad Pin Flat Package (PQFP)

Package Information

84J – PLCC

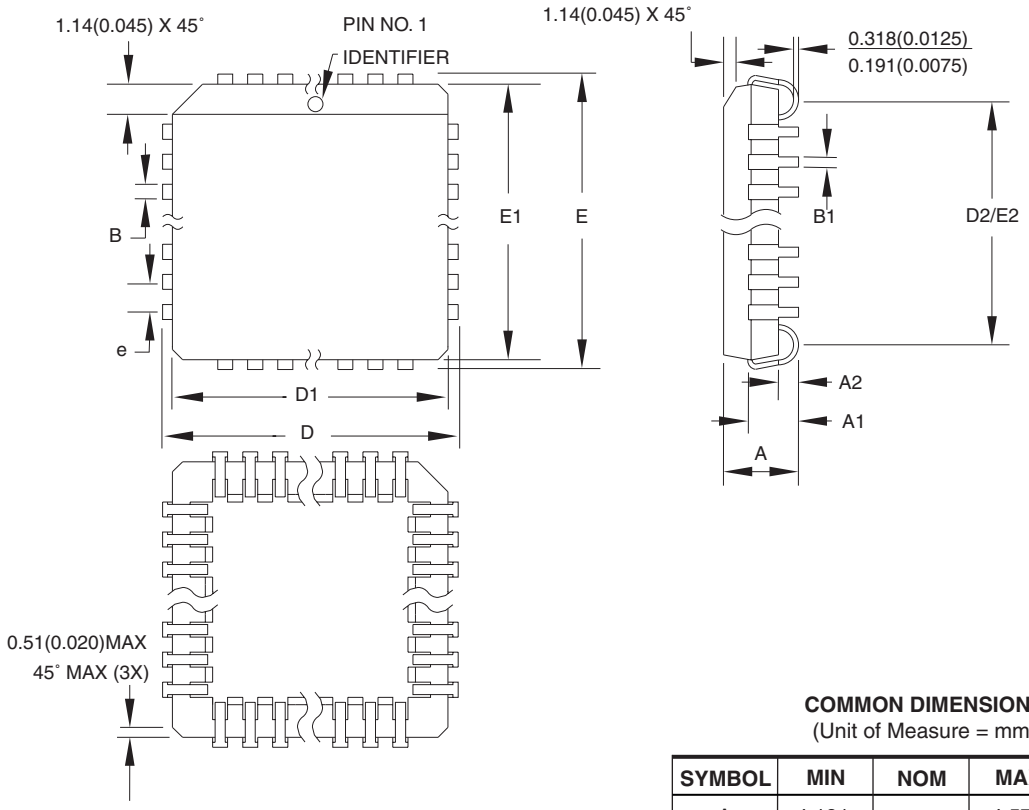

COMMON DIMENSIONS
(Unit of Measure = mm)

SYMBOL	MIN	NOM	MAX	NOTE
A	4.191	–	4.572	
A1	2.286	–	3.048	
A2	0.508	–	–	
D	30.099	–	30.353	
D1	29.210	–	29.413	Note 2
E	30.099	–	30.353	
E1	29.210	–	29.413	Note 2
D2/E2	27.686	–	28.702	
B	0.660	–	0.813	
B1	0.330	–	0.533	
e	1.270 TYP			

Notes:
1. This package conforms to JEDEC reference MS-018, Variation AF.
2. Dimensions D1 and E1 do not include mold protrusion. Allowable protrusion is .010"(0.254 mm) per side. Dimension D1 and E1 include mold mismatch and are measured at the extreme material condition at the upper or lower parting line.
3. Lead coplanarity is 0.004" (0.102 mm) maximum.

10/04/01

	TITLE	DRAWING NO.	REV.
2325 Orchard Parkway San Jose, CA 95131	**84J**, 84-lead, Plastic J-leaded Chip Carrier (PLCC)	84J	B

100Q1 – PQFP

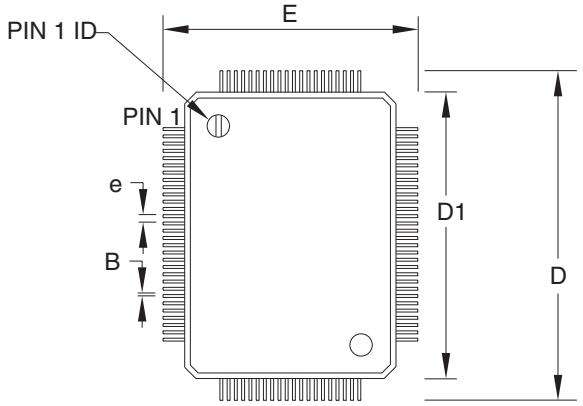

COMMON DIMENSIONS
(Unit of Measure = mm)
JEDEC STANDARD MS-022, GC-1

SYMBOL	MIN	NOM	MAX	NOTE
A	–	3.04	3.4	
A1	0.25	0.33	0.5	
D	23.20 BSC			
E	17.20 BSC			
E1	14.00 BSC			
B	0.22	–	0.40	
C	0.11	–	0.23	
D1	20 BSC			
L	0.73	–	1.03	
e	0.65 BSC			

07/6/2005

	TITLE	DRAWING NO.	REV.
2325 Orchard Parkway San Jose, CA 95131	**100Q1**, 100-lead, 14 x 20 mm Body, 3.2 mm Footprint, 0.65 mm Pitch, Plastic Quad Flat Package (PQFP)	100Q1	C

100A – TQFP

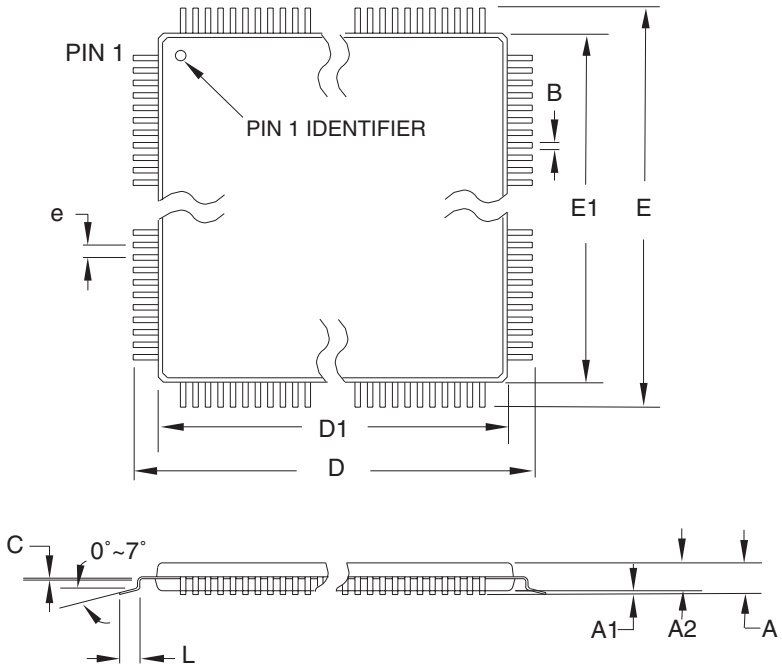

COMMON DIMENSIONS
(Unit of Measure = mm)

SYMBOL	MIN	NOM	MAX	NOTE
A	–	–	1.20	
A1	0.05	–	0.15	
A2	0.95	1.00	1.05	
D	15.75	16.00	16.25	
D1	13.90	14.00	14.10	Note 2
E	15.75	16.00	16.25	
E1	13.90	14.00	14.10	Note 2
B	0.17	–	0.27	
C	0.09	–	0.20	
L	0.45	–	0.75	
e	0.50 TYP			

Notes:
1. This package conforms to JEDEC reference MS-026, Variation AED.
2. Dimensions D1 and E1 do not include mold protrusion. Allowable protrusion is 0.25 mm per side. Dimensions D1 and E1 are maximum plastic body size dimensions including mold mismatch.
3. Lead coplanarity is 0.08 mm maximum.

10/5/2001

	TITLE	DRAWING NO.	REV.
2325 Orchard Parkway San Jose, CA 95131	**100A,** 100-lead, 14 x 14 mm Body Size, 1.0 mm Body Thickness, 0.5 mm Lead Pitch, Thin Profile Plastic Quad Flat Package (TQFP)	100A	C

160Q1 – PQFP

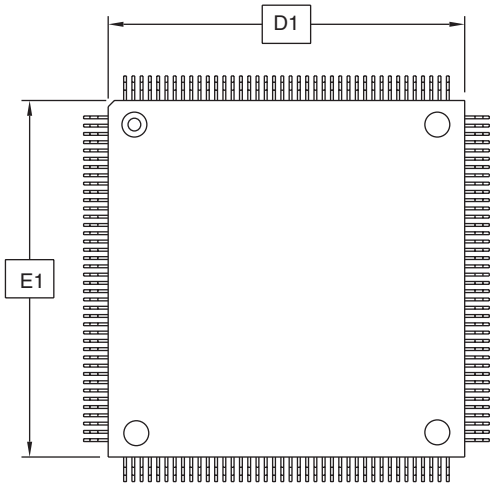

Top View

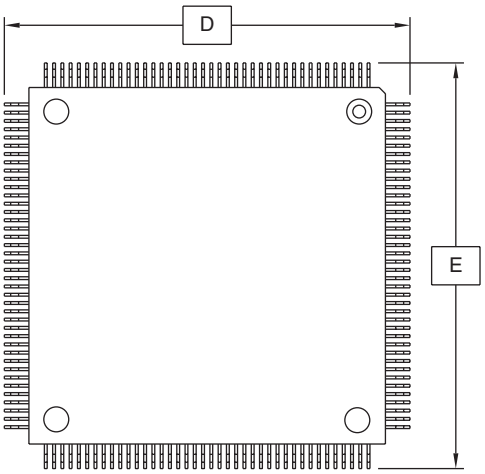

Bottom View

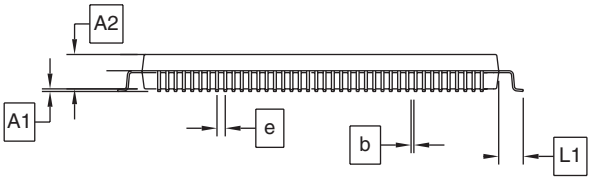

Side View

COMMON DIMENSIONS
(Unit of Measure = mm)

SYMBOL	MIN	NOM	MAX	NOTE
A1	0.25	–	0.50	5
A2	3.20	3.40	3.60	
D	31.20 BSC			2
D1	28.00 BSC			3
E	31.20 BSC			2
E1	28.00 BSC			3
e	0.65 BSC			
b	0.22	–	0.40	4
L1	1.60 REF			

Notes:
1. This drawing is for general information only. Refer to JEDEC Drawing MS-022, Variation DD-1, for additional information.
2. To be determined at seating plane.
3. Regardless of the relative size of the upper and lower body sections, dimensions D1 and E1 are determined at the largest feature of the body exclusive of mold Flash and gate burrs, but including any mismatch between the upper and lower sections of the molded body.
4. Dimension b does not include Dambar protrusion. The Dambar protrusion(s) shall not cause the lead width to exceed b maximum by more than 0.08 mm. Dambar cannot be located on the lower radius or the lead foot.
5. A1 is defined as the distance from the seating plane to the lowest point of the package body.

3/28/02

	TITLE	DRAWING NO.	REV.
2325 Orchard Parkway San Jose, CA 95131	**160Q1,** 160-lead, 28 x 28 mm Body, 3.2 Form Opt., Plastic Quad Flat Pack (PQFP)	160Q1	A

Revision History

Revision	Comments
0784P	Green package options added.
0784O	The ATF1508ASL-25 commercial speed offering was obsoleted in 2002 and replaced by the ATF1508ASL-20 commercial speed grade.

Atmel Corporation

2325 Orchard Parkway
San Jose, CA 95131, USA
Tel: 1(408) 441-0311
Fax: 1(408) 487-2600

Regional Headquarters

Europe
Atmel Sarl
Route des Arsenaux 41
Case Postale 80
CH-1705 Fribourg
Switzerland
Tel: (41) 26-426-5555
Fax: (41) 26-426-5500

Asia
Room 1219
Chinachem Golden Plaza
77 Mody Road Tsimshatsui
East Kowloon
Hong Kong
Tel: (852) 2721-9778
Fax: (852) 2722-1369

Japan
9F, Tonetsu Shinkawa Bldg.
1-24-8 Shinkawa
Chuo-ku, Tokyo 104-0033
Japan
Tel: (81) 3-3523-3551
Fax: (81) 3-3523-7581

Atmel Operations

Memory
2325 Orchard Parkway
San Jose, CA 95131, USA
Tel: 1(408) 441-0311
Fax: 1(408) 436-4314

Microcontrollers
2325 Orchard Parkway
San Jose, CA 95131, USA
Tel: 1(408) 441-0311
Fax: 1(408) 436-4314

La Chantrerie
BP 70602
44306 Nantes Cedex 3, France
Tel: (33) 2-40-18-18-18
Fax: (33) 2-40-18-19-60

ASIC/ASSP/Smart Cards
Zone Industrielle
13106 Rousset Cedex, France
Tel: (33) 4-42-53-60-00
Fax: (33) 4-42-53-60-01

1150 East Cheyenne Mtn. Blvd.
Colorado Springs, CO 80906, USA
Tel: 1(719) 576-3300
Fax: 1(719) 540-1759

Scottish Enterprise Technology Park
Maxwell Building
East Kilbride G75 0QR, Scotland
Tel: (44) 1355-803-000
Fax: (44) 1355-242-743

RF/Automotive
Theresienstrasse 2
Postfach 3535
74025 Heilbronn, Germany
Tel: (49) 71-31-67-0
Fax: (49) 71-31-67-2340

1150 East Cheyenne Mtn. Blvd.
Colorado Springs, CO 80906, USA
Tel: 1(719) 576-3300
Fax: 1(719) 540-1759

Biometrics/Imaging/Hi-Rel MPU/
High Speed Converters/RF Datacom
Avenue de Rochepleine
BP 123
38521 Saint-Egreve Cedex, France
Tel: (33) 4-76-58-30-00
Fax: (33) 4-76-58-34-80

Literature Requests
www.atmel.com/literature

Disclaimer: The information in this document is provided in connection with Atmel products. No license, express or implied, by estoppel or otherwise, to any intellectual property right is granted by this document or in connection with the sale of Atmel products. **EXCEPT AS SET FORTH IN ATMEL'S TERMS AND CONDITIONS OF SALE LOCATED ON ATMEL'S WEB SITE, ATMEL ASSUMES NO LIABILITY WHATSOEVER AND DISCLAIMS ANY EXPRESS, IMPLIED OR STATUTORY WARRANTY RELATING TO ITS PRODUCTS INCLUDING, BUT NOT LIMITED TO, THE IMPLIED WARRANTY OF MERCHANTABILITY, FITNESS FOR A PARTICULAR PURPOSE, OR NON-INFRINGEMENT. IN NO EVENT SHALL ATMEL BE LIABLE FOR ANY DIRECT, INDIRECT, CONSEQUENTIAL, PUNITIVE, SPECIAL OR INCIDENTAL DAMAGES (INCLUDING, WITHOUT LIMITATION, DAMAGES FOR LOSS OF PROFITS, BUSINESS INTERRUPTION, OR LOSS OF INFORMATION) ARISING OUT OF THE USE OR INABILITY TO USE THIS DOCUMENT, EVEN IF ATMEL HAS BEEN ADVISED OF THE POSSIBILITY OF SUCH DAMAGES.** Atmel makes no representations or warranties with respect to the accuracy or completeness of the contents of this document and reserves the right to make changes to specifications and product descriptions at any time without notice. Atmel does not make any commitment to update the information contained herein. Unless specifically provided otherwise, Atmel products are not suitable for, and shall not be used in, automotive applications. Atmel's products are not intended, authorized, or warranted for use as components in applications intended to support or sustain life.

© Atmel Corporation 2005. **All rights reserved.** Atmel®, logo and combinations thereof, Everywhere You Are® and others, are registered trademarks or trademarks of Atmel Corporation or its subsidiaries. Other terms and product names may be trademarks of others.

Printed on recycled paper.

0784P–PLD–7/05 xM

Мы молодая и активно развивающаяся компания в области поставок электронных компонентов. Мы поставляем электронные компоненты отечественного и импортного производства напрямую от производителей и с крупнейших складов мира.

Благодаря сотрудничеству с мировыми поставщиками мы осуществляем комплексные и плановые поставки широчайшего спектра электронных компонентов.

Собственная эффективная логистика и склад в обеспечивает надежную поставку продукции в точно указанные сроки по всей России.

Мы осуществляем техническую поддержку нашим клиентам и предпродажную проверку качества продукции. На все поставляемые продукты мы предоставляем гарантию .

Осуществляем поставки продукции под контролем ВП МО РФ на предприятия военно-промышленного комплекса России , а также работаем в рамках 275 ФЗ с открытием отдельных счетов в уполномоченном банке. Система менеджмента качества компании соответствует требованиям ГОСТ ISO 9001.

Минимальные сроки поставки, гибкие цены, неограниченный ассортимент и индивидуальный подход к клиентам являются основой для выстраивания долгосрочного и эффективного сотрудничества с предприятиями радиоэлектронной промышленности, предприятиями ВПК и научно-исследовательскими институтами России.

С нами вы становитесь еще успешнее!

Наши контакты:

Телефон: +7 812 627 14 35

Электронная почта: sales@st-electron.ru

Адрес: 198099, Санкт-Петербург, Промышленная ул, дом № 19, литера Н, помещение 100-Н Офис 331