Complete Low Cost 12-Bit D/A Converters

ADDAC80/ADDAC85/ADDAC87

FEATURES
Single Chip Construction
On-Board Output Amplifier
Low Power Dissipation: 300 mW
Monotonicity Guaranteed over Temperature
Guaranteed for Operation with 12 V Supplies
Improved Replacement for Standard DAC80, DAC800 HI-5680
High Stability, High Current Output Buried Zener Reference
Laser Trimmed to High Accuracy 1/2 LSB Max Nonlinearity
Low Cost Plastic Packaging

FUNCTIONAL BLOCK DIAGRAM

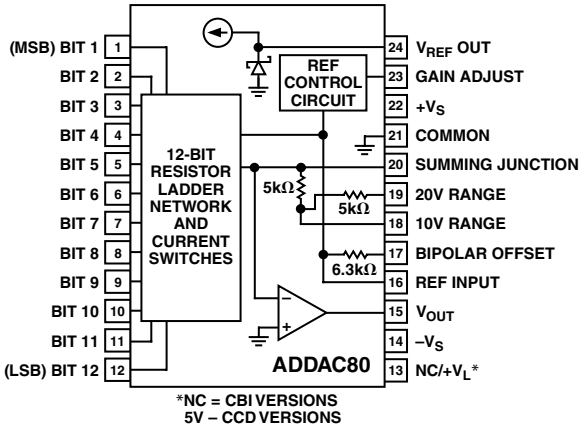

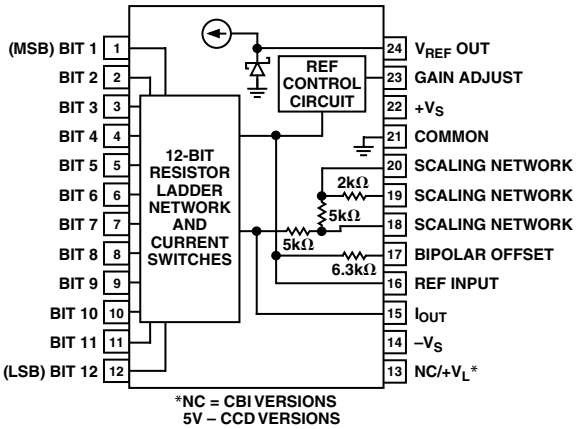

PRODUCT DESCRIPTION

The ADDAC80 Series is a family of low cost 12-bit digital-to-analog converters with both a high stability voltage reference and output amplifier combined on a single monolithic chip. The ADDAC80 Series is recommended for all low cost 12-bit D/A converter applications where reliability and cost are of paramount importance.

Advanced circuit design and precision processing techniques result in significant performance advantages over conventional DAC80 devices. Innovative circuit design reduces the total power consumption to 300 mW, which not only improves reliability, but also improves long term stability.

The ADDAC80 incorporates a fully differential, nonsaturating precision current switching cell structure which provides greatly increased immunity to supply voltage variation. This same structure also reduces nonlinearities due to thermal transients as the various bits are switched; nearly all critical components operate at constant power dissipation. High stability, SiCr thin film resistors are trimmed with a fine resolution laser, resulting in lower differential nonlinearity errors. A low noise, high stability, subsurface Zener diode is used to produce a reference voltage with excellent long term stability, high external current capability and temperature drift characteristics which challenge the best discrete Zener references.

The ADDAC80 Series is available in three performance grades and three package types. The ADDAC80 is specified for use over the 0°C to 70°C temperature range and is available in both plastic and ceramic DIP packages. The ADDAC85 and ADDAC87 are available in hermetically sealed ceramic packages and are specified for the –25°C to +85°C and –55°C to +125°C temperature ranges.

PRODUCT HIGHLIGHTS

1. The ADDAC80 series of D/A converters directly replaces all other devices of this type with significant increases in performance.
2. Single chip construction and low power consumption provides the optimum choice for applications where low cost and high reliability are major considerations.
3. The high speed output amplifier has been designed to settle within 1/2 LSB for a 10 V full scale transition in 2.0 µs, when properly compensated.
4. The precision buried Zener reference can supply up to 2.5 mA for use elsewhere in the application.
5. The low TC binary ladder guarantees that all units are monotonic over the specified temperature range.
6. System performance upgrading is possible without redesign.

REV. B

Information furnished by Analog Devices is believed to be accurate and reliable. However, no responsibility is assumed by Analog Devices for its use, nor for any infringements of patents or other rights of third parties that may result from its use. No license is granted by implication or otherwise under any patent or patent rights of Analog Devices.

One Technology Way, P.O. Box 9106, Norwood, MA 02062-9106, U.S.A.
Tel: 781/329-4700 **www.analog.com**
Fax: 781/326-8703
© Analog Devices, Inc., 2002

ADDAC80/ADDAC85/ADDAC87–SPECIFICATIONS

(T_A = 25°C, rated power supplies unless otherwise noted.)

Model	ADDAC80 Min	ADDAC80 Typ	ADDAC80 Max	ADDAC85 Min	ADDAC85 Typ	ADDAC85 Max	ADDAC87 Min	ADDAC87 Typ	ADDAC87 Max	Unit
TECHNOLOGY		Monolithic			Monolithic			Monolithic		
DIGITAL INPUT										
Binary–CBI			12			12			12	Bits
BCD–CCD										Digits
Logic Levels (TTL Compatible)										
V_{IH} (Logic "1")	**2.0**		**5.5**	**2.0**		**5.5**	**2.0**		**5.5**	V
V_{IL} (Logic "0")	**0**		**0.8**	**0**		**0.8**	**0**		**0.8**	V
I_{IH} (V_{IH} = 5.5 V)			**250**			**250**			**250**	µA
I_{IL} (V_{IL} = 0.8 V)			**100**			**100**			**100**	µA
TRANSFER CHARACTERISTICS										
ACCURACY										
Linearity Error @ 25°C										
CBI			±1/2			±1/2			±1/2	LSB[1]
CCD										LSB
T_A @ T_{MIN} to T_{MAX}		±1/4	**±1/2**		±1/4	**±1/2**		±1/2	**±3/4**	LSB
Differential Linearity Error @ 25°C										
CBI			**±3/4**			**±3/4**			**±3/4**	LSB
CCD										LSB
T_A @ T_{MIN} to T_{MAX}			±3/4			±1			±1	LSB
Gain Error[2]		±0.1	**±0.3**		±0.1	**±0.2**		±0.1	±0.2	%FSR[3]
Offset Error[2]		±0.05	±0.15		±0.05	**±0.1**		±0.05	±0.1	%FSR[3]
Temperature Range for Guaranteed Monotonicity	0		+70	–25		+85	–55		+125	°C
DRIFT (T_{MIN} to T_{MAX})										
Total Bipolar Drift, max (includes gain, offset, and linearity drifts)			±20			±20			±30	ppm of FSR/°C
Total Error (T_{MIN} to T_{MAX})[4]										
Unipolar		±0.08	±0.15		±0.12	±0.2		±0.18	±0.3	% of FSR
Bipolar		±0.06	±0.10		±0.08	±0.12		±0.14	±0.24	% of FSR
Gain Including Internal Reference		±15	**±30**			**±20**			**±20**	ppm of FSR/°C
Gain Excluding Internal Reference		±4	±7			±10			±10	ppm of FSR/°C
Unipolar Offset		±1	±3			±3			**±3**	ppm of FSR/°C
Bipolar Offset		±5	±10			±10			**±10**	ppm of FSR/°C
CONVERSION SPEED										
Voltage Model (V)[5]										
Settling Time to ±0.01% of FSR for FSR Change (2 kΩ‖500 pF load)										
with 10 kΩ Feedback		3	4		3	4		3	4	µs
with 5 kΩ Feedback		2	3		2	3		2	3	µs
For LSB Change		1			1			1		µs
Slew Rate	10			10			10			V/µs
ANALOG OUTPUT										
Voltage Models										
Ranges–CBI		±2.5, ±5, ±10, +5, 10			±2.5, ±5, ±10, +5, 10			±2.5, ±5, ±10, +5, 10		V V V
–CCD										V
Output Current	±5			±5			±5			mA
Output Impedance (dc)		0.05			0.05			0.05		Ω
Short Circuit Current			40			40			40	mA
Internal Reference Voltage (V_R)	**6.23**	6.3	**6.37**	**6.23**	6.3	**6.37**	**6.23**	6.3	**6.37**	V
Output Impedance		1.5			1.5			1.5		Ω
Max External Current[6]			**2.5**			**2.5**			**2.5**	mA
Tempco of Drift		±10	±20		±10	±20			±10	ppm of V_R/°C
POWER SUPPLY SENSITIVITY										
±15 V ± 10%, 5 V supply when applicable			**±0.002**			**±0.002**			**±0.002**	% of FSR/%V_S
±12 V ± 5%			**±0.002**			**±0.002**			**±0.002**	% of FSR/%V_S
POWER SUPPLY REQUIREMENTS										
Rated Voltages		±15			±15			±15		V
Range										
Analog Supplies	±11.4[7]		±16.5	±11.4[7]		±16.5	±11.4[7]		±16.5	V
Logic Supplies										V
Supply Drain										
+12 V, +15 V		5	**10**		5	**10**		5	**10**	mA
–12 V, –15 V		14	**20**		14	**20**		14	**20**	mA

Model	ADDAC80 Min	ADDAC80 Typ	ADDAC80 Max	ADDAC85 Min	ADDAC85 Typ	ADDAC85 Max	ADDAC87 Min	ADDAC87 Typ	ADDAC87 Max	Unit
TEMPERATURE RANGE										
Specifications	0		+70	–25		+85	–55		+125	°C
Operating	–25		+85	–55		+125	–55		+125	°C
Storage	–25		+125	–65		+150	–65		+150	°C

NOTES
[1]Least Significant Bit.
[2]Adjustable to zero with external trim potentiometer.
[3]FSR means "Full Scale Range" and is 20 V for the ±10 V range and 10 V for the ±5 V range.
[4]Gain and offset errors adjusted to zero at 25°C.
[5]C_F = 0, see Figure 3a.
[6]Maximum with no degradation of specification, must be a constant load.
[7]A minimum of ±12.3 V is required for a ±10 V full scale output and ±11.4 V is required for all other voltage ranges.

Specifications shown in **boldface** are tested on all production units at final electrical test. Results from those tests are used to calculate outgoing quality levels. All min and max specifications are guaranteed, although only those shown in boldface are tested on all production units.

Specifications subject to change without notice.

Model	ADDAC80 Min	ADDAC80 Typ	ADDAC80 Max	ADDAC85 Min	ADDAC85 Typ	ADDAC85 Max	ADDAC87 Min	ADDAC87 Typ	ADDAC87 Max	Unit
TECHNOLOGY		Hybrid			Hybrid			Hybrid		
DIGITAL INPUT										
Binary–CBI			12			12			12	Bits
BCD–CCD			3			3			3	Digits
Logic Levels (TTL Compatible)										
V_{IH} (Logic "1")	2.0		5.5	2.0		5.5	2.0		5.5	V
V_{IL} (Logic "0")	0		0.8	0		0.8	0		0.8	V
I_{IH} (V_{IH} = 5.5 V)		250			250			250		µA
I_{IL} (V_{IL} = 0.8 V)		–100			–100			–100		µA
TRANSFER CHARACTERISTICS										
ACCURACY										
Linearity Error @ 25°C										
CBI		±1/4	±1/2			±1/2			±1/2	LSB[1]
CCD		±1/8	±1/4			±1/4			±1/4	LSB
T_A @ T_{MIN} to T_{MAX}		±1/4	±1/2		±1/4	±1/2		±1/2	±1/2	LSB
Differential Linearity Error @ 25°C										
CBI		±1/2	±3/4		±1/2			±1/2		LSB
CCD		±1/4	±1/2		±1/2			±1/2		LSB
T_A @ T_{MIN} to T_{MAX}			±1			±1			±1	LSB
Gain Error[2]		±0.1	±0.3		±0.1			±0.1		%FSR[3]
Offset Error[2]		±0.05	±0.15		±0.05			±0.05		%FSR[3]
Temperature Range for Guaranteed Monotonicity	0		+70	0		+70	–25		+85	°C
DRIFT (T_{MIN} to T_{MAX})										
Total Bipolar Drift, max (includes gain, offset, and linearity drifts)			±20							ppm of FSR/°C
Total Error (T_{MIN} to T_{MAX})[4]										
Unipolar		±0.08	±0.15							% of FSR
Bipolar		±0.06	±0.10							% of FSR
Gain										
Including Internal Reference		±15	±30			±20			±20	ppm of FSR/°C
Excluding Internal Reference		±5	±7			±10			±10	ppm of FSR/°C
Unipolar Offset		±1	±3		±1			±1		ppm of FSR/°C
Bipolar Offset		±5	±10			±10			±10	ppm of FSR/°C
CONVERSION SPEED										
Voltage Model (V)[5]										
Settling Time to ±0.01% of FSR for FSR Change (2 kΩ‖500 pF load)										
with 10 kΩ Feedback		5			5			5		µs
with 5 kΩ Feedback		3			3			3		µs
For LSB Change		1.5			1.5			1.5		µs
Slew Rate	10	15			20			20		V/µs
Current Model (I)										
Settling time to ±0.01% of FSR for FSR Change										
10 Ω to 100 Ω Load		300			300			300		ns
for 1 kΩ		1			1			1		µs

ADDAC80/ADDAC85/ADDAC87–SPECIFICATIONS (continued)

Model	ADDAC80 Min	ADDAC80 Typ	ADDAC80 Max	ADDAC85 Min	ADDAC85 Typ	ADDAC85 Max	ADDAC87 Min	ADDAC87 Typ	ADDAC87 Max	Unit
ANALOG OUTPUT										
Voltage Models										
Ranges–CBI		±2.5, ±5, ±10, +5, +10			±2.5, ±5, ±10, +5, +10			±2.5, ±5, ±10, +5, +10		V
Ranges–CCD		±10			+10			+10		V
Output Current	±5			±5			±5			mA
Output Impedance (dc)		0.05			0.05			0.05		Ω
Short Circuit Duration	Indefinite to Common			Indefinite to Common			Indefinite to Common			
Current Models										
Ranges–Unipolar		–2.0			–2.0			–2.0		mA
Ranges–Bipolar		±1.0			±1.0			±1.0		mA
Output Impedance										
Bipolar		3.2			3.2			3.2		kΩ
Unipolar		6.6			6.6			6.6		kΩ
Compliance		–1.5, +10			–2.5, +10			–2.5, +10		V
Internal Reference Voltage (V_R)	6.17	6.3	6.43	6.17	6.3	6.43	6.17	6.3	6.43	V
Output Impedance		1.5			1.5			1.5		Ω
Max External Current[6]			2.5			2.5			2.5	mA
Tempco of Drift		±10	±20		±10	±20		±10	±20	ppm of V_R/°C
POWER SUPPLY SENSITIVITY										
±15 V ± 10%, 5 V Supply When Applicable		±0.002			±0.002			±0.002		% of FSR/%V_S
POWER SUPPLY REQUIREMENTS										
Rated Voltages		±15, +5			±15, +5			±15, +5		V
Range										
Analog Supplies	±14		±16	±14.5		±15.5	±14.5		±15.5	V
Logic Supplies	4.5		16	4.5		15.5	4.5		15.5	V
Supply Drain[7]										
+15 V		10	20		15	20		15	20	mA
–15 V		20	35		25	30		25	30	mA
+5 V[8]		8	20		15	20		15	20	mA
TEMPERATURE RANGE										
Specifications	0		+70	0		+70	–25		+85	°C
Operating	–25		+85	–25		+85	–55		+125	°C
Storage	–55		+130	–65		+150	–65		+150	°C

NOTES
[1]Least Significant Bit.
[2]Adjustable to zero with external trim potentiometer.
[3]FSR means "Full Scale Range" and is 20 V for the ±10 V range and 10 V for the ±5 V range.
[4]Gain and offset errors adjusted to zero at 25°C.
[5]C_F = 0, see Figure 3a.
[6]Maximum with no degradation of specification, must be a constant load.
[7]Including 5 mA load.
[8]5 V supply required only for CCD versions.

Specifications subject to change without notice.

Model	ADDAC85LD Min	ADDAC85LD Typ	ADDAC85LD Max	ADDAC85MIL Min	ADDAC85MIL Typ	ADDAC85MIL Max	ADDAC87 Min	ADDAC87 Typ	ADDAC87 Max	Unit
TECHNOLOGY		Hybrid			Hybrid			Hybrid		
DIGITAL INPUT										
Binary–CBI			12			12			12	Bits
BCD–CCD										Digits
Logic Levels (TTL Compatible)										
V_{IH} (Logic "1")	2.0		5.5	2.0		5.5	2.0		5.5	V
V_{IL} (Logic "0")	0		0.8	0		0.8	0		0.8	V
I_{IH} (V_{IH} = 5.5 V)		250			250			250		µA
I_{IL} (V_{IL} = 0.8 V)		–100			–100			–100		µA
TRANSFER CHARACTERISTICS										
ACCURACY										
Linearity Error @ 25°C										
CBI			±1/2			±1/2		±1/4	±1/2	LSB[1]
CCD										LSB
T_A @ T_{MIN} to T_{MAX}			±1/2			±3/4			±3/4	LSB
Differential Linearity Error @ 25°C										
CBI		±1/2			±1/2			±1/2		LSB
CCD										LSB
T_A @ T_{MIN} to T_{MAX}			±1			±1			±1	LSB
Gain Error[2]		±0.1			±0.1			±0.1	±0.2	%FSR[3]
Offset Error[2]		±0.05			±0.05			±0.05	±0.1	%FSR[3]
Temperature Range for Guaranteed Monotonicity	–25		+85	–55		+125	–55		+125	°C
DRIFT (T_{MIN} to T_{MAX})										
Total Bipolar Drift, max (includes gain, offset, and linearity drifts)								±15	±30	ppm of FSR/°C
Total Error (T_{MIN} to T_{MAX})[4]										
Unipolar								±0.13	±0.30	% of FSR
Bipolar								±0.12	±0.24	% of FSR
Gain										
Including Internal Reference			±10			±20		±10	±25	ppm of FSR/°C
Excluding Internal Reference								±5	±10	ppm of FSR/°C
Unipolar Offset		±1			±2			±1	±3	ppm of FSR/°C
Bipolar Offset			±5			±10		±5	±10	ppm of FSR/°C
CONVERSION SPEED										
Voltage Model (V)[5]										
Settling Time to ±0.01% of FSR for FSR change (2 kΩ‖500 pF load)										
with 10 kΩ Feedback		5			5			5		µs
with 5 kΩ Feedback		3			3			3		µs
For LSB Change		1.5			1.5			1.5		µs
Slew Rate		20			20			20		V/µs
Current Model (I)										
Settling Time to ±0.01% of FSR for FSR Change										
10 Ω to 100 Ω Load		300			300			300		ns
for 1 kΩ		1			1			1		µs
ANALOG OUTPUT										
Voltage Models										
Ranges–CBI		±2.5, ±5, ±10, +5, +10			±2.5, ±5, ±10, +5, +10			±2.5, ±5, ±10, +5, +10		V
–CCD										V
Output Current	±5			±5			±5			mA
Output Impedance (dc)		0.05			0.05			0.05		Ω
Short Circuit Duration	Indefinite to Common			Indefinite to Common			Indefinite to Common			
Current Models										
Ranges–Unipolar		–2.0			–2.0			–2.0		mA
–Bipolar		±1.0			±1.0			±1.0		mA
Output Impedance										
Bipolar		3.2			3.2		2.5	3.2	4.1	kΩ
Unipolar		6.6			6.6		5.0	6.6	8.2	kΩ
Compliance		–2.5, +10			–2.5, +10			–1.5, +10		V
Internal Reference Voltage (V_R)	6.17	6.3	6.43	6.17	6.3	6.43	6.17	6.3	6.43	V
Output Impedance		1.5			1.5			1.5		Ω
Max External Current[6]			2.5			2.5			2.5	mA
Tempco of Drift		±10	±20		±10	±20		±5	±10	ppm of V_R/°C
POWER SUPPLY SENSITIVITY										
±15 V ± 10%, 5 V supply when applicable		±0.002			±0.002			±0.002	±0.003	% of FSR/%V_S

ADDAC80/ADDAC85/ADDAC87–SPECIFICATIONS (continued)

Model	ADDAC85LD Min	ADDAC85LD Typ	ADDAC85LD Max	ADDAC85MIL Min	ADDAC85MIL Typ	ADDAC85MIL Max	ADDAC87 Min	ADDAC87 Typ	ADDAC87 Max	Unit
POWER SUPPLY REQUIREMENTS										
Rated Voltages		±15, 5			±15, 5			±15, 5		V
Range										
Analog Supplies	±14.5		±15.5	±14.5		±15.5	±13.5		±16.5	V
Logic Supplies	+4.5		±15.5	+4.5		+15.5	+4.5		±16.5	V
Supply Drain[7]										
+15 V		15	20		15	20		10	20	mA
–15 V		25	30		25	30		20	35	mA
+5 V[8]		15	20		15	20		10	20	mA
TEMPERATURE RANGE										
Specification	–25		+85	–55		+125	–55		+125	°C
Operating	–55		+125	–55		+125	–55		+125	°C
Storage	–55		+125	–55		+125	–65		+150	°C

NOTES
[1]Least Significant Bit.
[2]Adjustable to zero with external trim potentiometer.
[3]FSR means "Full-Scale Range" and is 20 V for the ±10 V range and 10 V for the ±5 V range.
[4]Gain and offset errors adjusted to zero at 25°C.
[5]C_F = 0, see Figure 3a.
[6]Maximum with no degradation of specification, must be a constant load.
[7]Including 5 mA load.
[8]5 V supply required only for CCD versions.

Specifications subject to change without notice.

ABSOLUTE MAXIMUM RATINGS

$+V_S$ to Power Ground . . . . . 0 V to +18 V
$-V_S$ to Power Ground . . . . . 0 V to –18 V
Digital Inputs (Pins 1 to 12) to Power Ground . . . . . –1.0 V to +7 V
Ref In to Reference Ground . . . . . ±12 V
Bipolar Offset to Reference Ground . . . . . ±12 V
10 V Span R to Reference Ground . . . . . ±12 V
20 V Span R to Reference Ground . . . . . ±24 V
Ref Out . . . . . Indefinite Short to Power Ground or $+V_S$

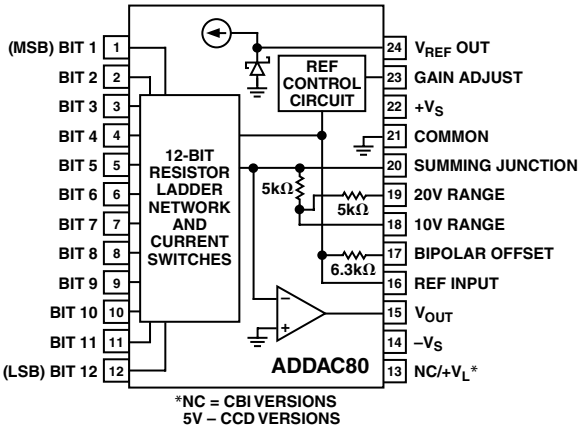

Figure 1. Voltage Model Function Diagram and Pin Configuration

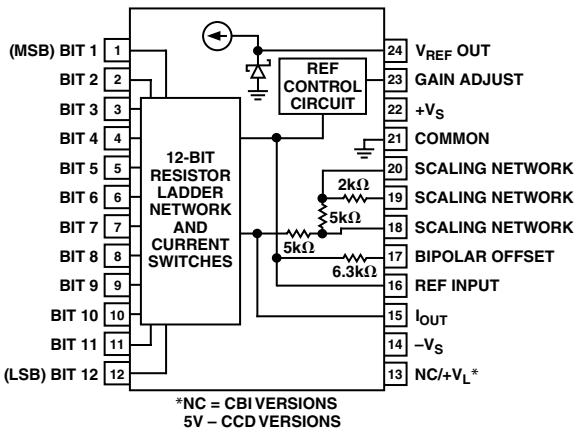

Figure 2. Current Model Functional Diagram and Pin Configuration

ORDERING GUIDE

Model	Input Code	Output Mode	Technology	Temperature Range	Linearity Error	Package Option[1]
ADDAC80N-CBI-V	Binary	Voltage	Monolithic	0°C to 70°C	±1/2 LSB	N-24A
ADDAC80D-CBI-V	Binary	Voltage	Monolithic	0°C to 70°C	±1/2 LSB	D-24
ADDAC85D-CBI-V	Binary	Voltage	Monolithic	–25°C to +85°C	±1/2 LSB	D-24
ADDAC87D-CBI-V	Binary	Voltage	Monolithic	–55°Cto +125°C	±1/2 LSB	D-24
ADDAC80-CBI-V	Binary	Voltage	Hybrid	0°C to 70°C	±1/2 LSB	DH-24A
ADDAC80-CBI-I	Binary	Current	Hybrid	0°C to 70°C	±1/2 LSB	DH-24A
ADDAC80-CCD-V	Binary Coded Decimal	Voltage	Hybrid	0°C to 70°C	±1/4 LSB	DH-24A
ADDAC80-CCD-I	Binary Coded Decimal	Current	Hybrid	0°C to 70°C	±1/4 LSB	DH-24A
ADDAC80Z-CBI-V[2]	Binary	Voltage	Hybrid	0°C to 70°C	±1/2 LSB	DH-24A
ADDAC80Z-CBI-I[2]	Binary	Current	Hybrid	0°C to 70°C	±1/2 LSB	DH-24A
ADDAC80Z-CCD-V[2]	Binary Coded Decimal	Voltage	Hybrid	0°C to 70°C	±1/4 LSB	DH-24A
ADDAC80Z-CCD-I[2]	Binary Coded Decimal	Current	Hybrid	0°C to 70°C	±1/4 LSB	DH-24A
ADDAC85C-CBI-V[3]	Binary	Voltage	Hybrid	0°C to 70°C	±1/2 LSB	DH-24A
ADDAC85C-CBI-I	Binary	Current	Hybrid	0°C to 70°C	±1/2 LSB	DH-24A
ADDAC85-CBI-V[3]	Binary	Voltage	Hybrid	–25°C to +85°C	±1/2 LSB	DH-24A
ADDAC85-CBI-I[3]	Binary	Current	Hybrid	–25°C to +85°C	±1/2 LSB	DH-24A
ADDAC85LD-CBI-V[3]	Binary	Voltage	Hybrid	–25°C to +85°C	±1/2 LSB	DH-24A
ADDAC85LD-CBI-I[3]	Binary	Current	Hybrid	–25°C to +85°C	±1/2 LSB	DH-24A
ADDAC85MIL-CBI-V[3]	Binary	Voltage	Hybrid	–55°C to +125°C	±1/2 LSB	DH-24A
ADDAC85MIL-CBI-I[3]	Binary	Current	Hybrid	–55°C to +125°C	±1/2 LSB	DH-24A
ADDAC85C-CCD-V[3]	Binary Coded Decimal	Voltage	Hybrid	0°C to 70°C	±1/4 LSB	DH-24A
ADDAC85C-CCD-I[3]	Binary Coded Decimal	Current	Hybrid	0°C to 70°C	±1/4 LSB	DH-24A
ADDAC85-CCD-V[3]	Binary Coded Decimal	Voltage	Hybrid	–25°C to +85°C	±1/4 LSB	DH-24A
ADDAC85-CCD-I[3]	Binary Coded Decimal	Current	Hybrid	–25°C to +85°C	±1/4 LSB	DH-24A
ADDAC85MILCBII8	Binary	Current	Hybrid	–55°C to +125°C	±1/2 LSB	DH-24A
ADDAC85MILCBIV8	Binary	Voltage	Hybrid	–55°C to +125°C	±1/2 LSB	DH-24A
ADDAC87-CBI-V[3]	Binary	Voltage	Hybrid	–55°C to +125°C	±1/2 LSB	DH-24A
ADDAC87-CBI-I[3]	Binary	Current	Hybrid	–55°C to +125°C	±1/2 LSB	DH-24A
ADDAC87-CBII883	Binary	Current	Hybrid	–55°C to +125°C	±1/2 LSB	DH-24A
ADDAC87-CBIV883	Binary	Voltage	Hybrid	–55°C to +125°C	±1/2 LSB	DH-24A

NOTES
[1]For outline information see Package Information section.
[2]Z-Suffix devices guarantee performance of 0 V to +5 V and ±5 V spans with minimum supply voltages of ±11.4 V.
[3]These models have been discontinued. This is for historical information only.

PRODUCT OFFERING

Analog Devices has developed a number of technologies to support products within the data acquisition market. In serving the market new products are implemented with the technology best suited to the application. The DAC80 series of products was first implemented in hybrid form and now it is available in a single monolithic chip. We will provide both the hybrid and monolithic versions of the family so that in existing designs changes to documentation or product qualification will not have to be done. Specifications and ordering information for both versions are delineated in this data sheet.

DIGITAL INPUT CODES

The ADDAC80 Series accepts complementary digital input code in binary (CBI) format. The CBI model may be connected by the user for anyone of three complementary codes: CSB, COB or CTC.

Table I. Digital Input Codes

Digital Input	Analog Input		
MSB LSB	CSB Compl. Straight Binary	COB Compl. Offset Binary	CTC* Compl. Two's Compl.
000000000000	+Full-Scale	+Full-Scale	–1 LSB
011111111111	+1/2 Full-Scale	Zero	–Full-Scale
100000000000	Midscale	–1 LSB	+Full-Scale
111111111111	Zero	–Full-Scale	Zero

*Invert the MSB of the COB code with an external inverter to obtain CTC code.

ACCURACY

Accuracy error of a D/A converter is the difference between the analog output that is expected when a given digital code is applied and the output that is actually measured with that code applied to the converter. Accuracy error can be caused by gain error, zero error, linearity error, or any combination of the three. Of these three specifications, the linearity error specification is the most important since it cannot be corrected. Linearity error is specified over its entire temperature range. This means that the analog output will not vary by more than its maximum specification, from an ideal straight line drawn between the end points (inputs all "1"s and all "0"s) over the specified temperature range.

Differential linearity error of a D/A converter is the deviation from an ideal 1 LSB voltage change from one adjacent output state to the next. A differential linearity error specification of ±1/2 LSB means that the output voltage step sizes can range from 1/2 LSB to 1 1/2 LSB when the input changes from one adjacent input state to the next.

DRIFT

Gain Drift

A measure of the change in the full scale range output over temperature expressed in parts per million of full scale range per °C (ppm of FSR/°C). Gain drift is established by: 1) testing the end point differences for each ADDAC80 model at the lowest operating temperature, 25°C and the highest operating temperature; 2) calculating the gain error with respect to the 25°C value and; 3) dividing by the temperature change.

Offset Drift

A measure of the actual change in output with all "1"s on the input over the specified temperature range. The maximum change in offset is referenced to the offset at 25°C and is divided by the temperature range. This drift is expressed in parts per million of full scale range per °C (ppm of FSR/°C).

SETTLING TIME

Settling time for each model is the total time (including slew time) required for the output to settle within an error band around its final value after a change in input.

Voltage Output Models

Three settling times are specified to 0.01% of full scale range (FSR); two for maximum full scale range changes of 20 V, 10 V and one for a 1 LSB change. The 1 LSB change is measured at the major carry (0 1 1 1 . . . 1 1 to 1 0 0 0 . . . 0 0), the point at which the worst case settling time occurs. The settling time characteristic depends on the compensation capacitor selected, the optimum value is 25 pF as shown in Figure 3a.

Current Output Models

Two settling times are specified to ±0.01% of FSR. Each is given for current models connected with two different resistive loads: 10 Ω to 100 Ω and 1000 Ω to 1875 Ω. Internal resistors are provided for connecting nominal load resistances of approximately 1000 Ω to 1800 Ω for output voltage ranges of ±1 V and 0 V to –2 V.

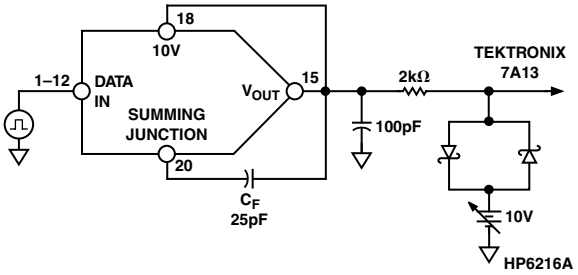

Figure 3a. Voltage Model Settling Time Circuit

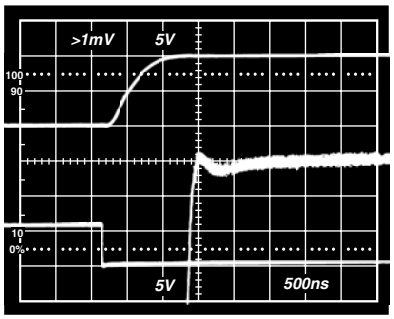

Figure 3b. Voltage Model Settling Time C_F = 25 pF

POWER SUPPLY SENSITIVITY

Power supply sensitivity is a measure of the effect of a power supply change on the D/A converter output. It is defined as a percent of FSR per percent of change in either the positive or negative supplies about the nominal power supply voltages.

REFERENCE SUPPLY

All models are supplied with an internal 6.3 V reference voltage supply. This voltage (Pin 24) is accurate to ±1% and must be connected to the Reference Input (Pin 16) for specified operation. This reference may also be used externally with external current drain limited to 2.5 mA. An external buffer amplifier is recommended if this reference is to be used to drive other system components. Otherwise, variations in the load driven by the reference will result in gain variations. All gain adjustments should be made under constant load conditions.

ANALYZING DEVICE ACCURACY OVER THE TEMPERATURE RANGE

For the purposes of temperature drift analysis, the major device components are shown in Figure 4. The reference element and buffer amplifier drifts are combined to give the total reference temperature coefficient. The input reference current to the DAC, I_{REF}, is developed from the internal reference and will show the same drift rate as the reference voltage. The DAC output current, I_{DAC}, which is a function of the digital input codes, is designed to track I_{REF}; if there is a slight mismatch in these currents over temperature, it will contribute to the gain T.C. The bipolar offset resistor, R_{BP}, and gain setting resistor, R_{GAIN}, also have temperature coefficients that contribute to system drift errors. The input offset voltage drift of the output amplifier, OA, also contributes a small error.

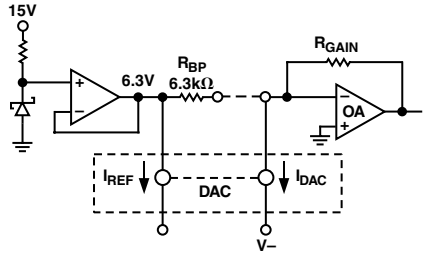

Figure 4. Bipolar Configuration

There are three types of drift errors over temperature: offset, gain, and linearity. Offset drift causes a vertical translation of the entire transfer curve; gain drift is a change in the slope of the curve; and linearity drift represents a change in the shape of the curve. The combination of these three drifts results in the complete specification for total error over temperature.

Total error is defined as the deviation from a true straight line transfer characteristic from exactly zero at a digital input that calls for zero output to a point that is defined as full-scale. A specification for total error over temperature assumes that both the zero and full-scale points have been trimmed for zero error at 25°C. Total error is normally expressed as a percentage of the full-scale range. In the bipolar situation, this means the total range from $-V_{FS}$ to $+V_{FS}$.

Several new design concepts not previously used in DAC80-type devices contribute to a reduction in all the error factors over temperature. The incorporation of low temperature coefficient silicon-chromium thin-film resistors deposited on a single chip, a patented, fully differential, emitter weighted, precision current steering cell structure, and a T.C. trimmed buried Zener diode reference element results in superior wide temperature range performance. The gain setting resistors and bipolar offset resistor are also fabricated on the chip with the same SiCr material as the ladder network, resulting in low gain and offset drift.

MONOTONICITY AND LINEARITY

The initial linearity error of ±1/2 LSB max and the differential linearity error of ±3/4 LSB max guarantee monotonic performance over the specified range. It can therefore be assumed that linearity errors are insignificant in computation of total temperature errors.

UNIPOLAR ERRORS

Temperature error analysis in the unipolar mode is straightforward: there is an offset drift and a gain drift. The offset drift (which comes from leakage currents and drift in the output amplifier (OA)) causes a linear shift in the transfer curve as shown in Figure 5. The gain drift causes a change in the slope of the curve and results from reference drift, DAC drift, and drift in R_{GAIN} relative to the DAC resistors.

BIPOLAR RANGE ERRORS

The analysis is slightly more complex in the bipolar mode. In this mode R_{BP} is connected to the summing node of the output amplifier (see Figure 4) to generate a current that exactly balances the current of the MSB so that the output voltage is zero with only the MSB on.

Note that if the DAC and application resistors track perfectly, the bipolar offset drift will be zero even if the reference drifts. A change in the reference voltage, which causes a shift in the bipolar offset, will also cause an equivalent change in I_{REF} and thus I_{DAC}, so that I_{DAC} will always be exactly balanced by I_{BP} with the MSB turned on. This effect is shown in Figure 5. The net effect of the reference drift then is simply to cause a rotation in the transfer around bipolar zero. However, consideration of second order effects (which are often overlooked) reveals the errors in the bipolar mode. The unipolar offset drifts previously discussed will have the same effect on the bipolar offset. A mismatch of R_{BP} to the DAC resistors is usually the largest component of bipolar drift, but in the ADDAC80 this error is held to 10 ppm/°C max. Gain drift in the DAC also contributes to bipolar offset drift, as well as full-scale drift, but again is held to 10 ppm/°C max.

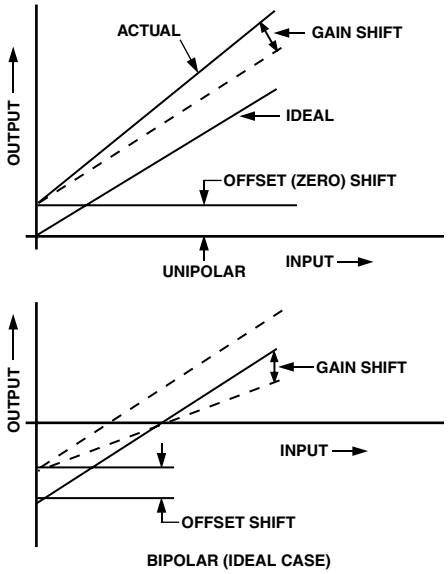

Figure 5. Unipolar and Bipolar Drifts

USING THE ADDAC80 SERIES POWER SUPPLY CONNECTIONS

For optimum performance power supply decoupling capacitors should be added as shown in the connection diagrams. These capacitors (1 µF electrolytic recommended) should be located close to the ADDAC80. Electrolytic capacitors, if used, should be paralleled with 0.01 µF ceramic capacitors for optimum high frequency performance.

EXTERNAL OFFSET AND GAIN ADJUSTMENT

Offset and gain may be trimmed by installing external OFFSET and GAIN potentiometers. These potentiometers should be connected as shown in the block diagrams and adjusted as described below. TCR of the potentiometers should be 100 ppm/°C or less. The 3.9 MΩ and 10 MΩ resistors (20% carbon or better) should be located close to the ADDAC80 to prevent noise pickup. If it is not convenient to use these high-value resistors, a functionally equivalent "T" network, as shown in Figure 8 may be substituted in each case. The gain adjust (Pin 23) is a high impedance point and a 0.01 µF ceramic capacitor should be connected from this pin to common to prevent noise pickup.

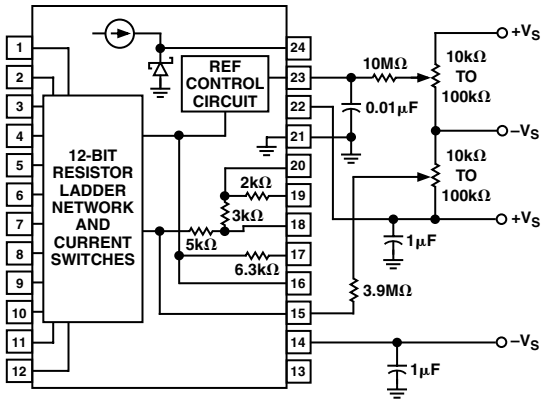

Figure 6. External Adjustment and Voltage Supply Connection Diagram, Current Model

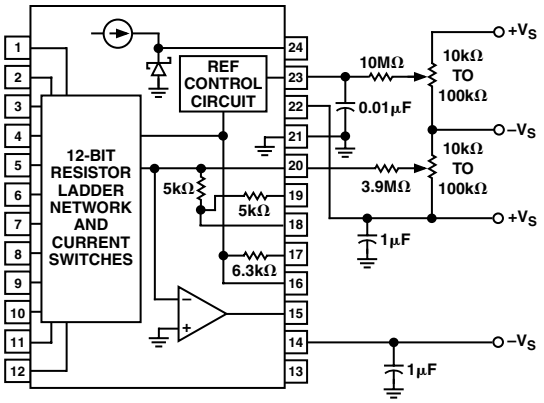

Figure 7. External Adjustment and Voltage Supply Connection Diagram, Voltage Model

Offset Adjustment

For unipolar (CSB) configurations, apply the digital input code that should produce zero potential output and adjust the OFFSET potentiometer for zero output. For bipolar (COB, CTC) configurations, apply the digital input code that should produce the maximum negative output voltage. Example: If the FULL SCALE RANGE is connected for 20 V, the maximum negative output voltage is –10 V. See Table II for corresponding codes.

Gain Adjustment

For either unipolar or bipolar configurations, apply the digital input that should give the maximum positive voltage output. Adjust the GAIN potentiometer for this positive full-scale voltage. See Table II for positive full-scale voltages.

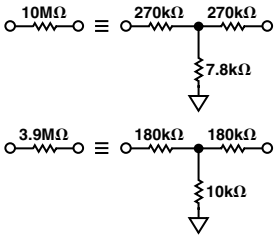

Figure 8. Equivalent Resistances

Table II. Digital Input Analog Output

Digital Input	Analog Output			
12-Bit Resolution	**Voltage***		**Current**	
MSB LSB	**0 to +10 V**	**±10 V**	**0 to –2 mA**	**±1 mA**
0 0 0 0 0 0 0 0 0 0 0 0	+9.9976 V	+9.9951 V	–1.9995 mA	–0.9995 mA
0 1 1 1 1 1 1 1 1 1 1 1	+5.0000 V	0.0000 V	–1.0000 mA	0.0000 mA
1 0 0 0 0 0 0 0 0 0 0 0	+4.9976 V	4.88 mV	–0.9995 mA	+0.0005 mA
1 1 1 1 1 1 1 1 1 1 1 1	0.0000 V	–10.0000 V	0.0000 mA	–1.00 mA
1 LSB	2.44 mV	–0.0049 V	0.488 μA	0.488 μA

*To obtain values for other binary ranges 0 to 5 V range: divide 0 to 10 values by 2; ±5 V range: divide ±10 V range values by 2; ±2.5 V range: divide ±10 V range values by 4.

VOLTAGE OUTPUT MODELS

Internal scaling resistors provided in the ADDAC80 may be connected to produce bipolar output voltage ranges of ±10 V, ±5 V or ±2.5 V or unipolar output voltage ranges of 0 V to +5 V or 0 V to +10 V (see Figure 9).

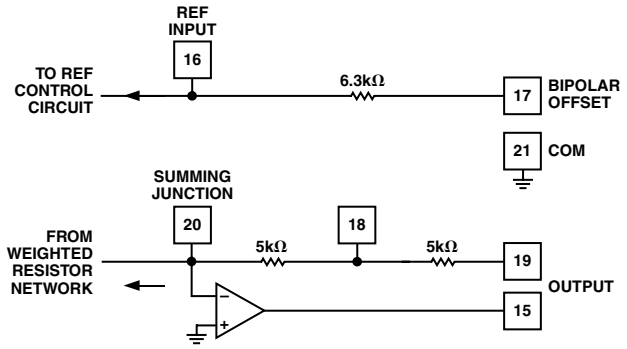

Figure 9. Output Amplifier Voltage Range Scaling Circuit

Gain and offset drift are minimized in the ADDAC80 because of the thermal tracking of the scaling resistors with other device components. Connections for various output voltage ranges are shown in Table III. Settling time is specified for a full-scale range change: 4 μs for a 10 kΩ feedback resistor; 3 μs for a 5 kΩ feedback resistor when using the compensation capacitor shown in Figure 3a.

The equivalent resistive scaling network and output circuit of the current model are shown in Figures 10 and 11. External R_{LS} resistors are required to produce exactly 0 V to –2 V or ±1 V output. TCR of these resistors should be ±100 ppm/°C or less to maintain the ADDAC80 output specifications. If exact output ranges are not required, the external resistors are not needed.

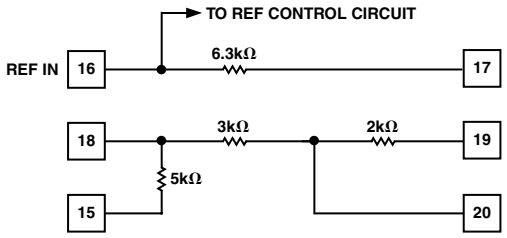

Figure 10. Internal Scaling Resistors

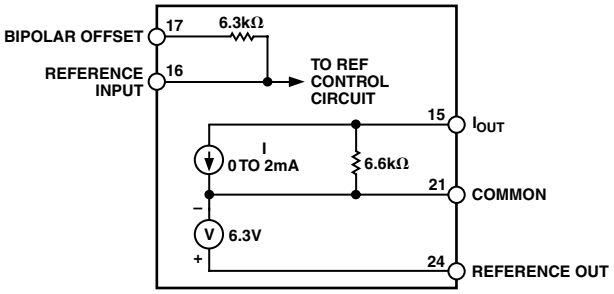

Figure 11. ADDAC80 Current Model Equivalent Output Circuit

Internal resistors are provided to scale an external op amp or to configure a resistive load to offer two output voltage ranges of ±1 V or 0 V to –2 V. These resistors (R_{LI} TCR = 20 ppm/°C) are an integral part of the ADDAC80 and maintain gain and bipolar offset drift specifications. If the internal resistors are not used, external R_L (or R_F) resistors should have a TCR of ±25 ppm/°C or less to minimize drift. This will typically add ±50 ppm/°C + the TCR of R_L (or R_F) to the total drift.

Table III. Output Voltage Range Connections, Voltage Model ADDAC80

Output Range	Digital Input Codes	Connect Pin 15 to	Connect Pin 17 to	Connect Pin 19 to	Connect Pin 16 to
±10 V	COB or CTC	19	20	15	24
±5 V	COB or CTC	18	20	NC	24
±2.5 V	COB or CTC	18	20	20	24
0 V to 10 V	CSB	18	21	NC	24
0 V to 5 V	CSB	18	21	20	24
0 V to 10 V	CCD	19	NC	15	24

NC = No Connect

DRIVING A RESISTIVE LOAD UNIPOLAR

A load resistance, $R_L = R_{LI}, + R_{LS}$, connected as shown in Figure 12 will generate a voltage range, V_{OUT}, determined by:

$$V_{OUT} = -2\ mA\left(\frac{6.6\ k\Omega \times R_L}{6.6\ k\Omega + R_L}\right) \quad (1)$$

where R_L max = 1.54 kΩ and V_{OUT} max = –2.5 V

To achieve specified drift, connect the internal scaling resistor (R_{LI}) as shown in Table IV to an external metal film trim resistor (R_{LS}) to provide full scale output voltage range of 0 V to –2 V. With R_{LS} = 0 V, V_{OUT} = –1.69 V.

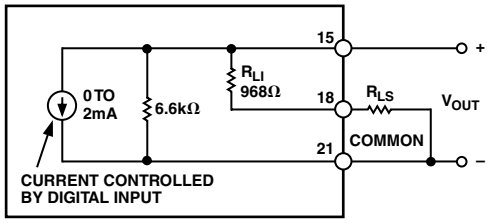

Figure 12. Equivalent Circuit ADDAC80-CBI-I Connected for Unipolar Voltage Output with Resistive Load

DRIVING A RESISTOR LOAD BIPOLAR

The equivalent output circuit for a bipolar output voltage range is shown in Figure 13, $R_L = R_{LI} + R_{LS}$. V_{OUT} is determined by:

$$V_{OUT} = \pm 1\,mA\left(\frac{R_L \times 3.22\,k\Omega}{R_L + 3.22\,k\Omega}\right) \quad (2)$$

where R_L max = 11.18 kΩ and V_{OUT} max = ±2.5 V

To achieve specified drift, connect the internal scaling resistors (R_{LI}) as shown in Table IV for the COB or CTC codes and add an external metal film resistor (R_{LS}) in series to obtain a full scale output range of ±1 V. In this configuration, with R_{LS} equal to zero, the full scale range will be ±0.874 V.

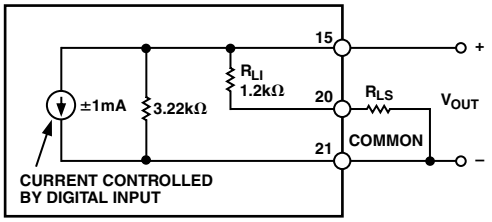

Figure 13. ADDAC80-CBI-I Connected for Bipolar Output Voltage with Resistive Load

DRIVING AN EXTERNAL OP AMP

The current model ADDAC80 will drive the summing junction of an op amp used as a current to voltage converter to produce an output voltage. As seen in Figure 14,

$$V_{OUT} = I_{OUT} \times R_F \quad (3)$$

where I_{OUT} is the ADDAC80 output current and R_F is the feedback resistor. Using the internal feedback resistors of the current model ADDAC80 provides output voltage ranges the same as the voltage model ADDAC80. To obtain the desired output voltage range when connecting an external op amp, refer to Table V and Figure 14.

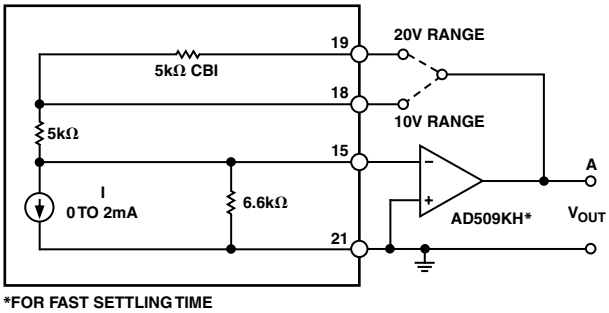

Figure 14. External Op Amp Using Internal Feedback Resistors

OUTPUT LARGER THAN 20 V RANGE

For output voltage ranges larger than ±10 V, a high voltage op amp may be employed with an external feedback resistor. Use I_{OUT} values of ±1 mA for bipolar voltage ranges and –2 mA for unipolar voltage ranges (see Figure 15). Use protection diodes when a high voltage op amp is used.

The feedback resistor, R_F, should have a temperature coefficient as low as possible. Using an external feedback resistor, overall drift of the circuit increases due to the lack of temperature tracking between R_F and the internal scaling resistor network. This will typically add 50 ppm/°C + R_F drift to total drift.

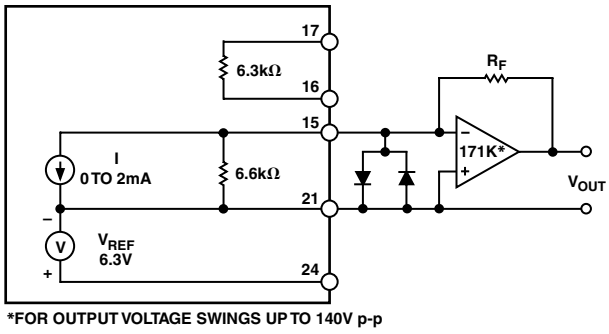

Figure 15. External Op Amp Using External Feedback Resistors

Table IV. Current Model/Resistive Load Connections

Digital Input Codes	Output Range	Internal Resistance R_{LI} (kΩ)	1% Metal Film External Resistance R_{LS}	R_{LI} Connections			Reference	Bipolar Offset	
				Connect Pin 15 to	Connect Pin 18 to	Connect Pin 20 to	Connect Pin 16 to	Connect Pin 17 to	R_{LS}
CSB	0 to –2 V	0.968	210 Ω	20	19 and R_{LS}	15	24	Com (21)	Between Pin 18 and Com (21)
COB or CTC	±1 V	1.2	249 Ω	18	19	R_{LS}	24	15	Between Pin 20 and Com (21)
CCD	0 to ±2 V	3	N/A	NC	21	NC	24	NC	N/A

Table V. External Op Amp Voltage Mode Connections

Output Range	Digital Input Codes	Connect A to	Connect Pin 17 to	Connect Pin 19 to	Connect Pin 16 to
±10 V	COB or CTC	19	15	A	24
±5 V	COB or CTC	18	15	NC	24
±2.5 V	COB or CTC	18	15	15	24
0 V to 10 V	CSB	18	21	NC	24
0 V to 5 V	CSB	18	21	15	24

OUTLINE DIMENSIONS

Dimensions shown in inches and (mm).

24-Lead Plastic DIP (N-24A)

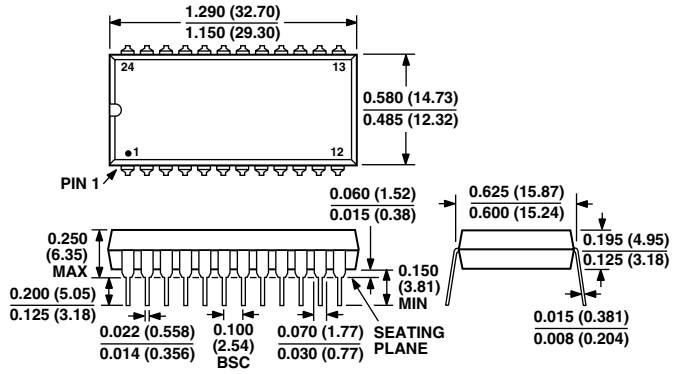

CONTROLLING DIMENSIONS ARE IN MILLIMETERS: INCH DIMENSIONS ARE ROUNDED-OFF MILLIMETER EQUIVALENTS FOR REFERENCE ONLY AND ARE NOT APPROPRIATE FOR USE IN DESIGN

24-Lead Ceramic DIP (D-24)

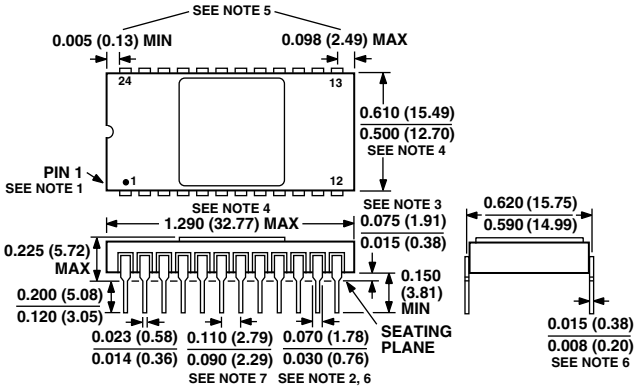

NOTES
1. INDEX AREA; A NOTCH OR A LEAD ONE IDENTIFICATION MARK IS LOCATED ADJACENT TO LEAD ONE.
2. THE MINIMUM LIMIT FOR DIMENSION MAY BE 0.023" (0.58 mm) FOR ALL FOUR CORNER LEADS ONLY.
3. DIMENSION SHALL BE MEASURED FROM THE SEATING PLANE TO THE BASE PLANE.
4. THIS DIMENSION ALLOWS FOR OFF-CENTER LID, MENISCUS AND GLASS OVERRUN.
5. APPLIES TO ALL FOUR CORNERS.
6. ALL LEADS — INCREASE MAXIMUM LIMIT BY 0.003" (0.08 mm) MEASURED AT THE CENTER OF THE FLAT, WHEN HOT SOLDER DIP LEAD FINISH IS APPLIED.
7. TWENTY TWO SPACES.
8. CONTROLLING DIMENSIONS ARE IN MILLIMETERS. INCH DIMENSIONS ARE ROUNDED-OFF MILLIMETER EQUIVALENTS FOR REFERENCE ONLY AND ARE NOT APPROPRIATE FOR USE IN DESIGN

OUTLINE DIMENSIONS

Dimensions shown in inches and (mm).

24-Lead Side Brazed Ceramic DIP for Hybrid (DH-24A)

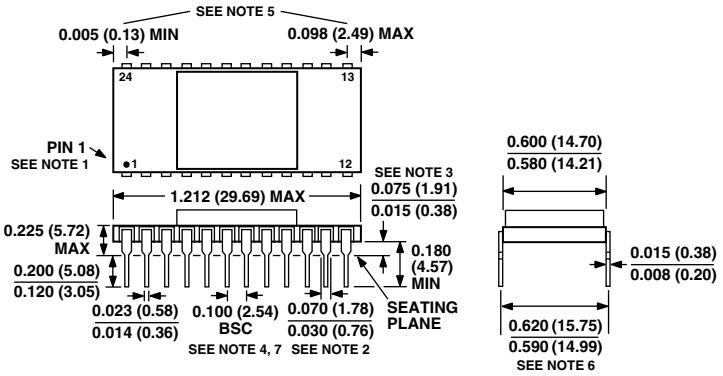

NOTES
1. INDEX AREA; A NOTCH OR A LEAD ONE IDENTIFICATION MARK IS LOCATED ADJACENT TO LEAD ONE.
2. THE MINIMUM LIMIT FOR DIMENSION MAY BE 0.023" (0.58 mm) FOR ALL FOUR CORNER LEADS ONLY.
3. DIMENSION SHALL BE MEASURED FROM THE SEATING PLANE TO THE BASE PLANE.
4. THE BASIC PIN SPACING IS 0.100" (2.54 mm) BETWEEN CENTERLINES.
5. APPLIES TO ALL FOUR CORNERS.
6. SHALL BE MEASURED AT THE CENTERLINE OF THE LEADS.
7. TWENTY TWO SPACES.
8. CONTROLLING DIMENSIONS ARE IN MILLIMETERS: INCH DIMENSIONS ARE ROUNDED-OFF MILLIMETER EQUIVALENTS FOR REFERENCE ONLY AND ARE NOT APPROPRIATE FOR USE IN DESIGN.

Revision History

Location	Page
Data Sheet changed from REV. A to REV. B.	
Update OUTLINE DIMENSION drawings	1

C00381–0–1/02(B)

PRINTED IN U.S.A.

Мы молодая и активно развивающаяся компания в области поставок электронных компонентов. Мы поставляем электронные компоненты отечественного и импортного производства напрямую от производителей и с крупнейших складов мира.

Благодаря сотрудничеству с мировыми поставщиками мы осуществляем комплексные и плановые поставки широчайшего спектра электронных компонентов.

Собственная эффективная логистика и склад в обеспечивает надежную поставку продукции в точно указанные сроки по всей России.

Мы осуществляем техническую поддержку нашим клиентам и предпродажную проверку качества продукции. На все поставляемые продукты мы предоставляем гарантию .

Осуществляем поставки продукции под контролем ВП МО РФ на предприятия военно-промышленного комплекса России , а также работаем в рамках 275 ФЗ с открытием отдельных счетов в уполномоченном банке. Система менеджмента качества компании соответствует требованиям ГОСТ ISO 9001.

Минимальные сроки поставки, гибкие цены, неограниченный ассортимент и индивидуальный подход к клиентам являются основой для выстраивания долгосрочного и эффективного сотрудничества с предприятиями радиоэлектронной промышленности, предприятиями ВПК и научно-исследовательскими институтами России.

С нами вы становитесь еще успешнее!

Наши контакты:

Телефон: +7 812 627 14 35

Электронная почта: sales@st-electron.ru

Адрес: 198099, Санкт-Петербург, Промышленная ул, дом № 19, литера Н, помещение 100-Н Офис 331