IGLOO PLUS Low Power Flash FPGAs
with Flash*Freeze Technology

Features and Benefits

Low Power
- 1.2 V to 1.5 V Core Voltage Support for Low Power
- Supports Single-Voltage System Operation
- 5 µW Power Consumption in Flash*Freeze Mode
- Low Power Active FPGA Operation
- Flash*Freeze Technology Enables Ultra-Low Power Consumption while Maintaining FPGA Content
- Configurable Hold Previous State, Tristate, HIGH, or LOW State per I/O in Flash*Freeze Mode
- Easy Entry To / Exit From Ultra-Low Power Flash*Freeze Mode

Feature Rich
- 30 k to 125 k System Gates
- Up to 36 kbits of True Dual-Port SRAM
- Up to 212 User I/Os

Reprogrammable Flash Technology
- 130-nm, 7-Layer Metal, Flash-Based CMOS Process
- Instant On Level 0 Support
- Single-Chip Solution
- Retains Programmed Design When Powered Off
- 250 MHz (1.5 V systems) and 160 MHz (1.2 V systems) System Performance

In-System Programming (ISP) and Security
- ISP Using On-Chip 128-Bit Advanced Encryption Standard (AES) Decryption via JTAG (IEEE 1532–compliant)†
- FlashLock® Designed to Secure FPGA Contents

High-Performance Routing Hierarchy
- Segmented, Hierarchical Routing and Clock Structure

Advanced I/O
- 1.2 V, 1.5 V, 1.8 V, 2.5 V, and 3.3 V Mixed-Voltage Operation
- Bank-Selectable I/O Voltages—4 Banks per Chip on All IGLOO® PLUS Devices
- Single-Ended I/O Standards: LVTTL, LVCMOS 3.3 V / 2.5 V / 1.8 V / 1.5 V / 1.2 V
- Selectable Schmitt Trigger Inputs
- Wide Range Power Supply Voltage Support per JESD8-B, Allowing I/Os to Operate from 2.7 V to 3.6 V
- Wide Range Power Supply Voltage Support per JESD8-12, Allowing I/Os to Operate from 1.14 V to 1.575 V
- I/O Registers on Input, Output, and Enable Paths
- Hot-Swappable and Cold-Sparing I/Os
- Programmable Output Slew Rate and Drive Strength
- Weak Pull-Up/-Down
- IEEE 1149.1 (JTAG) Boundary Scan Test
- Pin-Compatible Small-Footprint Packages across the IGLOO PLUS Family

Clock Conditioning Circuit (CCC) and PLL†
- Six CCC Blocks, One with an Integrated PLL
- Configurable Phase Shift, Multiply/Divide, Delay Capabilities, and External Feedback
- Wide Input Frequency Range (1.5 MHz up to 250 MHz)

Embedded Memory
- 1 kbit of FlashROM User Nonvolatile Memory
- SRAMs and FIFOs with Variable-Aspect-Ratio 4,608-Bit RAM Blocks (×1, ×2, ×4, ×9, and ×18 organizations)†
- True Dual-Port SRAM (except ×18)†

Table 1 • IGLOO PLUS Product Family

IGLOO PLUS Devices	AGLP030	AGLP060	AGLP125
System Gates	30,000	60,000	125,000
Typical Equivalent Macrocells	256	512	1,024
VersaTiles (D-flip-flops)	792	1,584	3,120
Flash*Freeze Mode (typical, µW)	5	10	16
RAM Kbits (1,024 bits)	–	18	36
4,608-Bit Blocks	–	4	8
Secure (AES) ISP	–	Yes	Yes
FlashROM Kbits	1	1	1
Integrated PLL in CCCs [1]	–	1	1
VersaNet Globals [2]	6	18	18
I/O Banks	4	4	4
Maximum User I/Os	120	157	212
Package Pins CS VQ	 CS201, CS289 VQ128	 CS201, CS289 VQ176	 CS281, CS289

Notes:
1. *AGLP060 in CS201 does not support the PLL.*
2. *Six chip (main) and twelve quadrant global networks are available for AGLP060 and AGLP125.*

† *The AGLP030 device does not support this feature.*

© 2015 Microsemi Corporation

I/Os Per Package [1]

IGLOO PLUS Devices	AGLP030	AGLP060	AGLP125
Package	**Single-Ended I/Os**		
CS201	120	157	–
CS281	–	–	212
CS289	120	157	212
VQ128	101	–	–
VQ176	–	137	–

*Note: When the Flash*Freeze pin is used to directly enable Flash*Freeze mode and not used as a regular I/O, the number of single-ended user I/Os available is reduced by one.*

Table 2 • IGLOO PLUS FPGAs Package Size Dimensions

Package	CS201	CS281	CS289	VQ128	VQ176
Length × Width (mm/mm)	8 × 8	10 × 10	14 × 14	14 × 14	20 × 20
Nominal Area (mm2)	64	100	196	196	400
Pitch (mm)	0.5	0.5	0.8	0.4	0.4
Height (mm)	0.89	1.05	1.20	1.0	1.0

IGLOO PLUS Device Status

IGLOO PLUS Device	Status
AGLP030	Production
AGLP060	Production
AGLP125	Production

IGLOO PLUS Ordering Information

AGLP125 V2 – CS G 289 Y I

- **Application (Temperature Range)**
  - Blank = Commercial (0°C to +85°C junction temperature)
  - I = Industrial (–40°C to +100°C junction temperature)
  - PP = Pre-Production
  - ES = Engineering Sample (room temperature only)
- **Security Feature**
  - Y = Device Includes License to Implement IP Based on the Cryptography Research, Inc. (CRI) Patent Portfolio
  - Blank = Device Does Not Include License to Implement IP Based on the Cryptography Research, Inc. (CRI) Patent Portfolio
- **Package Lead Count**
- **Lead-Free Packaging**
  - Blank = Standard Packaging
  - G= RoHS-Compliant Packaging
- **Package Type**
  - CS = Chip Scale Package (0.5 mm and 0.8 mm pitches)
  - VQ = Very Thin Quad Flat Pack (0.4 mm pitch)
- **Supply Voltage**
  - 2 = 1.2 V to 1.5 V
  - 5 = 1.5 V only
- **Part Number**
  - AGLP030 = 30,000 System Gates
  - AGLP060 = 60,000 System Gates
  - AGLP125 = 125,000 System Gates

1. *Marking information: IGLOO PLUS V2 devices do not have a V2 marking, but IGLOO PLUS V5 devices are marked accordingly.*
2. *"G" indicates RoHS-compliant packages.*

Temperature Grade Offerings

Package	AGLP030	AGLP060	AGLP125
CS201	C, I	C, I	–
CS281	–	–	C, I
CS289	C, I	C, I	C, I
VQ128	C, I	–	–
VQ176	–	C, I	–

Notes:
1. *C = Commercial temperature range: 0°C to 85°C junction temperature.*
2. *I = Industrial temperature range: –40°C to 100°C junction temperature.*

Contact your local Microsemi SoC Products Group representative for device availability:

http://www.microsemi.com/soc/company/contact/default.aspx.

Table of Contents

IGLOO PLUS Device Family Overview 1-1
General Description 1-1

IGLOO PLUS DC and Switching Characteristics 2-1
General Specifications 2-1
Calculating Power Dissipation 2-7
User I/O Characteristics 2-16
VersaTile Characteristics 2-52
Global Resource Characteristics 2-58
Clock Conditioning Circuits 2-62
Embedded SRAM and FIFO Characteristics 2-65
Embedded FlashROM Characteristics 2-79
JTAG 1532 Characteristics 2-80

Pin Descriptions and Packaging 3-1
Supply Pins 3-1
User Pins 3-2
JTAG Pins 3-4
Special Function Pins 3-5
Packaging 3-5
Related Documents 3-5

Package Pin Assignments 4-1
VQ128 4-1
VQ176 4-4
CS201 4-7
CS281 4-12
CS289 4-16

Datasheet Information 5-1
List of Changes 5-1
Datasheet Categories 5-8
Safety Critical, Life Support, and High-Reliability Applications Policy 5-8

1 – IGLOO PLUS Device Family Overview

General Description

The IGLOO PLUS family of flash FPGAs, based on a 130 nm flash process, offers the lowest power FPGA, a single-chip solution, small-footprint packages, reprogrammability, and an abundance of advanced features.

The Flash*Freeze technology used in IGLOO PLUS devices enables entering and exiting an ultra-low power mode that consumes as little as 5 µW while retaining the design information, SRAM content, registers, and I/O states. Flash*Freeze technology simplifies power management through I/O and clock management with rapid recovery to operation mode.

The Low Power Active capability (static idle) allows for ultra-low power consumption while the IGLOO PLUS device is completely functional in the system. This allows the IGLOO PLUS device to control system power management based on external inputs (e.g., scanning for keyboard stimulus) while consuming minimal power.

Nonvolatile flash technology gives IGLOO PLUS devices the advantage of being a secure, low power, single-chip solution that is Instant On. IGLOO PLUS is reprogrammable and offers time-to-market benefits at an ASIC-level unit cost.

These features enable designers to create high-density systems using existing ASIC or FPGA design flows and tools.

IGLOO PLUS devices offer 1 kbit of on-chip, reprogrammable, nonvolatile FlashROM storage as well as clock conditioning circuitry based on an integrated phase-locked loop (PLL). IGLOO PLUS devices have up to 125 k system gates, supported with up to 36 kbits of true dual-port SRAM and up to 212 user I/Os. The AGLP030 devices have no PLL or RAM support.

Flash*Freeze Technology

The IGLOO PLUS device offers unique Flash*Freeze technology, allowing the device to enter and exit ultra-low power Flash*Freeze mode. IGLOO PLUS devices do not need additional components to turn off I/Os or clocks while retaining the design information, SRAM content, registers, and I/O states. Flash*Freeze technology is combined with in-system programmability, which enables users to quickly and easily upgrade and update their designs in the final stages of manufacturing or in the field. The ability of IGLOO PLUS V2 devices to support a wide range of core and I/O voltages (1.2 V to 1.5 V) allows further reduction in power consumption, thus achieving the lowest total system power.

During Flash*Freeze mode, each I/O can be set to the following configurations: hold previous state, tristate, or set as HIGH or LOW.

The availability of low power modes, combined with reprogrammability, a single-chip and single-voltage solution, and availability of small-footprint, high-pin-count packages, make IGLOO PLUS devices the best fit for portable electronics.

Flash Advantages

Low Power

IGLOO PLUS devices exhibit power characteristics similar to those of an ASIC, making them an ideal choice for power-sensitive applications. IGLOO PLUS devices have only a very limited power-on current surge and no high-current transition period, both of which occur on many FPGAs.

IGLOO PLUS devices also have low dynamic power consumption to further maximize power savings; power is even further reduced by the use of a 1.2 V core voltage.

Low dynamic power consumption, combined with low static power consumption and Flash*Freeze technology, gives the IGLOO PLUS device the lowest total system power offered by any FPGA.

Security

Nonvolatile, flash-based IGLOO PLUS devices do not require a boot PROM, so there is no vulnerable external bitstream that can be easily copied. IGLOO PLUS devices incorporate FlashLock, which provides a unique combination of reprogrammability and design security without external overhead, advantages that only an FPGA with nonvolatile flash programming can offer.

IGLOO PLUS devices (except AGLP030) utilize a 128-bit flash-based lock and a separate AES key to provide the highest level of security in the FPGA industry for programmed intellectual property and configuration data. In addition, all FlashROM data in IGLOO PLUS devices can be encrypted prior to loading, using the industry-leading AES-128 (FIPS192) bit block cipher encryption standard. AES was adopted by the National Institute of Standards and Technology (NIST) in 2000 and replaces the 1977 DES standard. IGLOO PLUS devices have a built-in AES decryption engine and a flash-based AES key that make them the most comprehensive programmable logic device security solution available today. IGLOO PLUS devices with AES-based security provide a high level of protection for secure, remote field updates over public networks such as the Internet, and ensure that valuable IP remains out of the hands of system overbuilders, system cloners, and IP thieves.

Security, built into the FPGA fabric, is an inherent component of the IGLOO PLUS family. The flash cells are located beneath seven metal layers, and many device design and layout techniques have been used to make invasive attacks extremely difficult. The IGLOO PLUS family, with FlashLock and AES security, is unique in being highly resistant to both invasive and noninvasive attacks. Your valuable IP is protected with industry-standard security, making remote ISP possible. An IGLOO PLUS device provides the best available security for programmable logic designs.

Single Chip

Flash-based FPGAs store their configuration information in on-chip flash cells. Once programmed, the configuration data is an inherent part of the FPGA structure, and no external configuration data needs to be loaded at system power-up (unlike SRAM-based FPGAs). Therefore, flash-based IGLOO PLUS FPGAs do not require system configuration components such as EEPROMs or microcontrollers to load device configuration data. This reduces bill-of-materials costs and PCB area, and increases security and system reliability.

The IGLOO PLUS devices can be operated with a 1.2 V or 1.5 V single-voltage supply for core and I/Os, eliminating the need for additional supplies while minimizing total power consumption.

Instant On

Flash-based IGLOO PLUS devices support Level 0 of the Instant On classification standard. This feature helps in system component initialization, execution of critical tasks before the processor wakes up, setup and configuration of memory blocks, clock generation, and bus activity management. The Instant On feature of flash-based IGLOO PLUS devices greatly simplifies total system design and reduces total system cost, often eliminating the need for CPLDs and clock generation PLLs. In addition, glitches and brownouts in system power will not corrupt the IGLOO PLUS device's flash configuration, and unlike SRAM-based FPGAs, the device will not have to be reloaded when system power is restored. This enables the reduction or complete removal of the configuration PROM, expensive voltage monitor, brownout detection, and clock generator devices from the PCB design. Flash-based IGLOO PLUS devices simplify total system design and reduce cost and design risk while increasing system reliability and improving system initialization time.

IGLOO PLUS flash FPGAs allow the user to quickly enter and exit Flash*Freeze mode. This is done almost instantly (within 1 µs), and the device retains configuration and data in registers and RAM. Unlike SRAM-based FPGAs, the device does not need to reload configuration and design state from external memory components; instead, it retains all necessary information to resume operation immediately.

Reduced Cost of Ownership

Advantages to the designer extend beyond low unit cost, performance, and ease of use. Unlike SRAM-based FPGAs, flash-based IGLOO PLUS devices allow all functionality to be Instant On; no external boot PROM is required. On-board security mechanisms prevent access to all the programming information and enable secure remote updates of the FPGA logic. Designers can perform secure remote in-system reprogramming to support future design iterations and field upgrades with confidence that valuable intellectual property cannot be compromised or copied. Secure ISP can be performed using the industry-standard AES algorithm.

The IGLOO PLUS family device architecture mitigates the need for ASIC migration at higher user volumes. This makes the IGLOO PLUS family a cost-effective ASIC replacement solution, especially for applications in the consumer, networking/communications, computing, and avionics markets.

Firm-Error Immunity

Firm errors occur most commonly when high-energy neutrons, generated in the upper atmosphere, strike a configuration cell of an SRAM FPGA. The energy of the collision can change the state of the configuration cell and thus change the logic, routing, or I/O behavior in an unpredictable way. These errors are impossible to prevent in SRAM FPGAs. The consequence of this type of error can be a complete system failure. Firm errors do not exist in the configuration memory of IGLOO PLUS flash-based FPGAs. Once it is programmed, the flash cell configuration element of IGLOO PLUS FPGAs cannot be altered by high-energy neutrons and is therefore immune to them. Recoverable (or soft) errors occur in the user data SRAM of all FPGA devices. These can easily be mitigated by using error detection and correction (EDAC) circuitry built into the FPGA fabric.

Advanced Flash Technology

The IGLOO PLUS family offers many benefits, including nonvolatility and reprogrammability, through an advanced flash-based, 130 nm LVCMOS process with seven layers of metal. Standard CMOS design techniques are used to implement logic and control functions. The combination of fine granularity, enhanced flexible routing resources, and abundant flash switches allows for very high logic utilization without compromising device routability or performance. Logic functions within the device are interconnected through a four-level routing hierarchy.

IGLOO PLUS family FPGAs utilize design and process techniques to minimize power consumption in all modes of operation.

Advanced Architecture

The proprietary IGLOO PLUS architecture provides granularity comparable to standard-cell ASICs. The IGLOO PLUS device consists of five distinct and programmable architectural features (Figure 1-1 on page 1-4):

- Flash*Freeze technology
- FPGA VersaTiles
- Dedicated FlashROM
- Dedicated SRAM/FIFO memory†
- Extensive CCCs and PLLs†
- Advanced I/O structure

The FPGA core consists of a sea of VersaTiles. Each VersaTile can be configured as a three-input logic function, a D-flip-flop (with or without enable), or a latch by programming the appropriate flash switch interconnections. The versatility of the IGLOO PLUS core tile as either a three-input lookup table (LUT) equivalent or a D-flip-flop/latch with enable allows for efficient use of the FPGA fabric. The VersaTile capability is unique to the ProASIC® family of third-generation-architecture flash FPGAs. VersaTiles are connected with any of the four levels of routing hierarchy. Flash switches are distributed throughout the device to provide nonvolatile, reconfigurable interconnect programming. Maximum core utilization is possible for virtually any design.

† The AGLP030 device does not support PLL or SRAM.

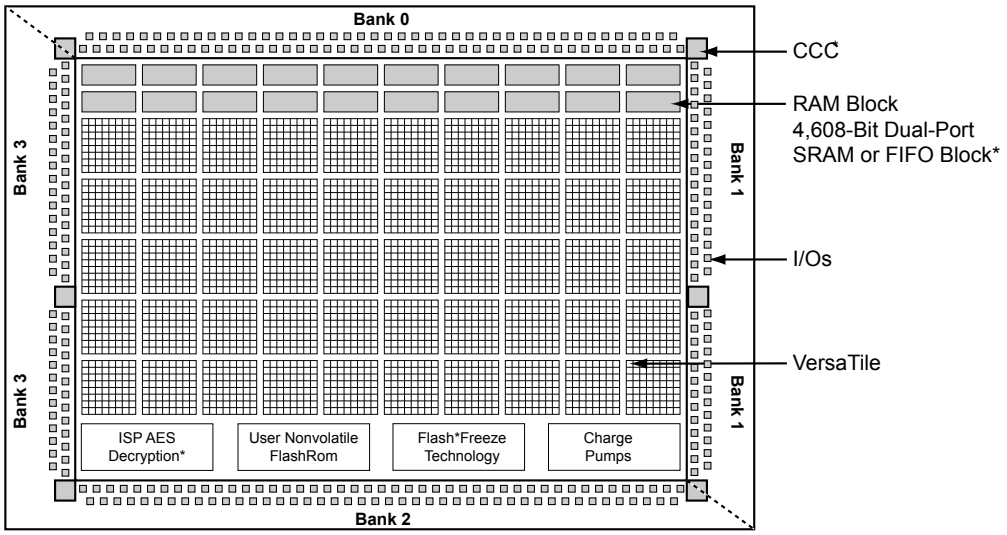

*Note: *Not supported by AGLP030 devices*

Figure 1-1 • **IGLOO PLUS Device Architecture Overview with Four I/O Banks (AGLP030, AGLP060, and AGLP125)**

*Flash*Freeze Technology*

The IGLOO PLUS device has an ultra-low power static mode, called Flash*Freeze mode, which retains all SRAM and register information and can still quickly return to normal operation. Flash*Freeze technology enables the user to quickly (within 1 µs) enter and exit Flash*Freeze mode by activating the Flash*Freeze pin while all power supplies are kept at their original values. In addition, I/Os and global I/Os can still be driven and can be toggling without impact on power consumption, clocks can still be driven or can be toggling without impact on power consumption, and the device retains all core registers, SRAM information, and I/O states. I/Os can be individually configured to either hold their previous state or be tristated during Flash*Freeze mode. Alternatively, they can be set to a certain state using weak pull-up or pull-down I/O attribute configuration. No power is consumed by the I/O banks, clocks, JTAG pins, or PLL, and the device consumes as little as 5 µW in this mode.

Flash*Freeze technology allows the user to switch to Active mode on demand, thus simplifying the power management of the device.

The Flash*Freeze pin (active low) can be routed internally to the core to allow the user's logic to decide when it is safe to transition to this mode. Refer to Figure 1-2 for an illustration of entering/exiting Flash*Freeze mode. It is also possible to use the Flash*Freeze pin as a regular I/O if Flash*Freeze mode usage is not planned.

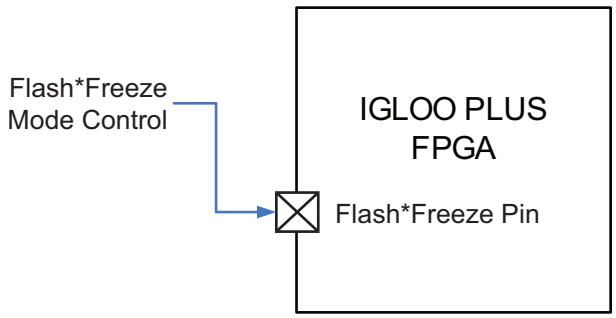

Figure 1-2 • **IGLOO PLUS Flash*Freeze Mode**

VersaTiles

The IGLOO PLUS core consists of VersaTiles, which have been enhanced beyond the ProASIC PLUS® core tiles. The IGLOO PLUS VersaTile supports the following:

- All 3-input logic functions—LUT-3 equivalent
- Latch with clear or set
- D-flip-flop with clear or set
- Enable D-flip-flop with clear or set

Refer to Figure 1-3 for VersaTile configurations.

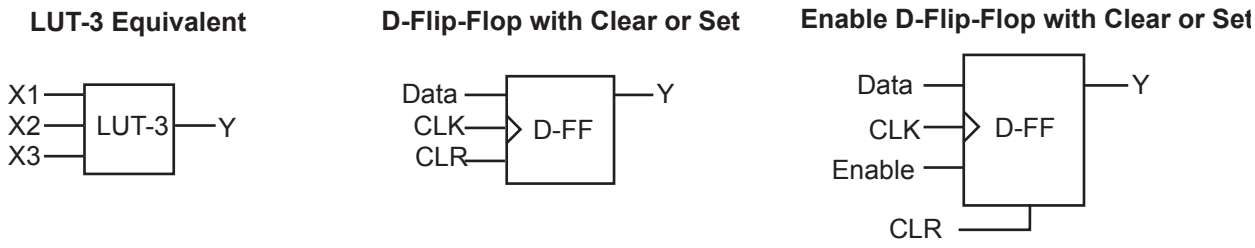

Figure 1-3 • **VersaTile Configurations**

User Nonvolatile FlashROM

IGLOO PLUS devices have 1 kbit of on-chip, user-accessible, nonvolatile FlashROM. The FlashROM can be used in diverse system applications:

- Internet protocol addressing (wireless or fixed)
- System calibration settings
- Device serialization and/or inventory control
- Subscription-based business models (for example, set-top boxes)
- Secure key storage for secure communications algorithms
- Asset management/tracking
- Date stamping
- Version management

The FlashROM is written using the standard IGLOO PLUS IEEE 1532 JTAG programming interface. The core can be individually programmed (erased and written), and on-chip AES decryption can be used selectively to securely load data over public networks (except in AGLP030 devices), as in security keys stored in the FlashROM for a user design.

The FlashROM can be programmed via the JTAG programming interface, and its contents can be read back either through the JTAG programming interface or via direct FPGA core addressing. Note that the FlashROM can only be programmed from the JTAG interface and cannot be programmed from the internal logic array.

The FlashROM is programmed as 8 banks of 128 bits; however, reading is performed on a byte-by-byte basis using a synchronous interface. A 7-bit address from the FPGA core defines which of the 8 banks and which of the 16 bytes within that bank are being read. The three most significant bits (MSBs) of the FlashROM address determine the bank, and the four least significant bits (LSBs) of the FlashROM address define the byte.

The IGLOO PLUS development software solutions, Libero® System-on-Chip (SoC) and Designer, have extensive support for the FlashROM. One such feature is auto-generation of sequential programming files for applications requiring a unique serial number in each part. Another feature allows the inclusion of static data for system version control. Data for the FlashROM can be generated quickly and easily using Libero SoC and Designer software tools. Comprehensive programming file support is also included to allow for easy programming of large numbers of parts with differing FlashROM contents.

SRAM and FIFO

IGLOO PLUS devices (except AGLP030 devices) have embedded SRAM blocks along their north side. Each variable-aspect-ratio SRAM block is 4,608 bits in size. Available memory configurations are 256×18, 512×9, 1k×4, 2k×2, and 4k×1 bits. The individual blocks have independent read and write ports that can be configured with different bit widths on each port. For example, data can be sent through a 4-bit port and read as a single bitstream. The embedded SRAM blocks can be initialized via the device JTAG port (ROM emulation mode) using the UJTAG macro (except in AGLP030 devices).

In addition, every SRAM block has an embedded FIFO control unit. The control unit allows the SRAM block to be configured as a synchronous FIFO without using additional core VersaTiles. The FIFO width and depth are programmable. The FIFO also features programmable Almost Empty (AEMPTY) and Almost Full (AFULL) flags in addition to the normal Empty and Full flags. The embedded FIFO control unit contains the counters necessary for generation of the read and write address pointers. The embedded SRAM/FIFO blocks can be cascaded to create larger configurations.

PLL and CCC

IGLOO PLUS devices provide designers with very flexible clock conditioning circuit (CCC) capabilities. Each member of the IGLOO PLUS family contains six CCCs. One CCC (center west side) has a PLL. The AGLP030 device does not have a PLL or CCCs; it contains only inputs to six globals.

The six CCC blocks are located at the four corners and the centers of the east and west sides. One CCC (center west side) has a PLL.

The four corner CCCs and the east CCC allow simple clock delay operations as well as clock spine access.

The inputs of the six CCC blocks are accessible from the FPGA core or from one of several inputs located near the CCC that have dedicated connections to the CCC block.

The CCC block has these key features:

- Wide input frequency range (f_{IN_CCC}) = 1.5 MHz up to 250 MHz
- Output frequency range (f_{OUT_CCC}) = 0.75 MHz up to 250 MHz
- 2 programmable delay types for clock skew minimization
- Clock frequency synthesis (for PLL only)

Additional CCC specifications:

- Internal phase shift = 0°, 90°, 180°, and 270°. Output phase shift depends on the output divider configuration (for PLL only).
- Output duty cycle = 50% ± 1.5% or better (for PLL only)
- Low output jitter: worst case < 2.5% × clock period peak-to-peak period jitter when single global network used (for PLL only)
- Maximum acquisition time is 300 µs (for PLL only)
- Exceptional tolerance to input period jitter—allowable input jitter is up to 1.5 ns (for PLL only)
- Four precise phases; maximum misalignment between adjacent phases (for PLL only) is 40 ps × 250 MHz / f_{OUT_CCC}

Global Clocking

IGLOO PLUS devices have extensive support for multiple clocking domains. In addition to the CCC and PLL support described above, there is a comprehensive global clock distribution network.

Each VersaTile input and output port has access to nine VersaNets: six chip (main) and three quadrant global networks. The VersaNets can be driven by the CCC or directly accessed from the core via multiplexers (MUXes). The VersaNets can be used to distribute low-skew clock signals or for rapid distribution of high-fanout nets.

I/Os with Advanced I/O Standards

The IGLOO PLUS family of FPGAs features a flexible I/O structure, supporting a range of voltages (1.2 V, 1.5 V, 1.8 V, 2.5 V, 3.0 V wide range, and 3.3 V). IGLOO PLUS FPGAs support many different I/O standards.

The I/Os are organized into four banks. All devices in IGLOO PLUS have four banks. The configuration of these banks determines the I/O standards supported.

Each I/O module contains several input, output, and output enable registers.

Hot-swap (also called hot-plug, or hot-insertion) is the operation of hot-insertion or hot-removal of a card in a powered-up system.

Cold-sparing (also called cold-swap) refers to the ability of a device to leave system data undisturbed when the system is powered up, while the component itself is powered down, or when power supplies are floating.

Wide Range I/O Support

IGLOO PLUS devices support JEDEC-defined wide range I/O operation. IGLOO PLUS devices support both the JESD8-B specification, covering 3 V and 3.3 V supplies, for an effective operating range of 2.7 V to 3.6 V, and JESD8-12 with its 1.2 V nominal, supporting an effective operating range of 1.14 V to 1.575 V.

Wider I/O range means designers can eliminate power supplies or power conditioning components from the board or move to less costly components with greater tolerances. Wide range eases I/O bank management and provides enhanced protection from system voltage spikes, while providing the flexibility to easily run custom voltage applications.

Specifying I/O States During Programming

You can modify the I/O states during programming in FlashPro. In FlashPro, this feature is supported for PDB files generated from Designer v8.5 or greater. See the *FlashPro User's Guide* for more information.

Note: PDB files generated from Designer v8.1 to Designer v8.4 (including all service packs) have limited display of Pin Numbers only.

1. Load a PDB from the FlashPro GUI. You must have a PDB loaded to modify the I/O states during programming.
2. From the FlashPro GUI, click PDB Configuration. A FlashPoint – Programming File Generator window appears.
3. Click the Specify I/O States During Programming button to display the Specify I/O States During Programming dialog box.
4. Sort the pins as desired by clicking any of the column headers to sort the entries by that header. Select the I/Os you wish to modify (Figure 1-4 on page 1-8).
5. Set the I/O Output State. You can set Basic I/O settings if you want to use the default I/O settings for your pins, or use Custom I/O settings to customize the settings for each pin. Basic I/O state settings:

   1 – I/O is set to drive out logic High

   0 – I/O is set to drive out logic Low

   Last Known State – I/O is set to the last value that was driven out prior to entering the programming mode, and then held at that value during programming Z -Tri-State: I/O is tristated

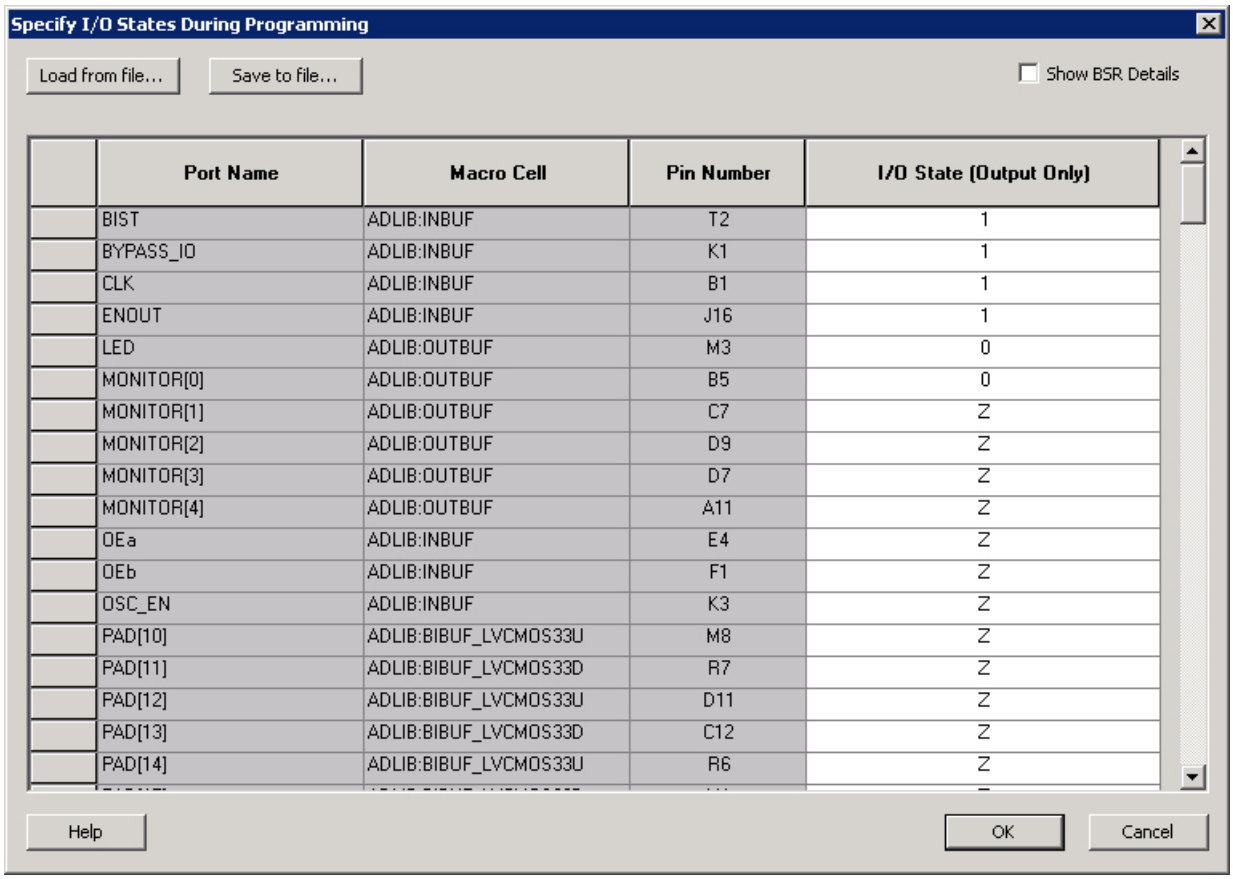

	Port Name	Macro Cell	Pin Number	I/O State (Output Only)
	BIST	ADLIB:INBUF	T2	1
	BYPASS_IO	ADLIB:INBUF	K1	1
	CLK	ADLIB:INBUF	B1	1
	ENOUT	ADLIB:INBUF	J16	1
	LED	ADLIB:OUTBUF	M3	0
	MONITOR[0]	ADLIB:OUTBUF	B5	0
	MONITOR[1]	ADLIB:OUTBUF	C7	Z
	MONITOR[2]	ADLIB:OUTBUF	D9	Z
	MONITOR[3]	ADLIB:OUTBUF	D7	Z
	MONITOR[4]	ADLIB:OUTBUF	A11	Z
	OEa	ADLIB:INBUF	E4	Z
	OEb	ADLIB:INBUF	F1	Z
	OSC_EN	ADLIB:INBUF	K3	Z
	PAD[10]	ADLIB:BIBUF_LVCMOS33U	M8	Z
	PAD[11]	ADLIB:BIBUF_LVCMOS33D	R7	Z
	PAD[12]	ADLIB:BIBUF_LVCMOS33U	D11	Z
	PAD[13]	ADLIB:BIBUF_LVCMOS33D	C12	Z
	PAD[14]	ADLIB:BIBUF_LVCMOS33U	R6	Z

Figure 1-4 • **I/O States During Programming Window**

6. Click OK to return to the FlashPoint – Programming File Generator window.

Note: I/O States During programming are saved to the ADB and resulting programming files after completing programming file generation.

2 – IGLOO PLUS DC and Switching Characteristics

General Specifications

Operating Conditions

Stresses beyond those listed in Table 2-1 may cause permanent damage to the device.

Exposure to absolute maximum rating conditions for extended periods may affect device reliability. Absolute Maximum Ratings are stress ratings only; functional operation of the device at these or any other conditions beyond those listed under the Recommended Operating Conditions specified in Table 2-2 on page 2-2 is not implied.

Table 2-1 • **Absolute Maximum Ratings**

Symbol	Parameter	Limits	Units
VCC	DC core supply voltage	–0.3 to 1.65	V
VJTAG	JTAG DC voltage	–0.3 to 3.75	V
VPUMP	Programming voltage	–0.3 to 3.75	V
VCCPLL	Analog power supply (PLL)	–0.3 to 1.65	V
VCCI	DC I/O buffer supply voltage	–0.3 to 3.75	V
VI[1]	I/O input voltage	–0.3 V to 3.6 V	V
T_{STG} [2]	Storage temperature	–65 to +150	°C
T_J [2]	Junction temperature	+125	°C

Notes:

1. *The device should be operated within the limits specified by the datasheet. During transitions, the input signal may undershoot or overshoot according to the limits shown in Table 2-4 on page 2-3.*
2. *For flash programming and retention maximum limits, refer to Table 2-3 on page 2-3, and for recommended operating limits, refer to Table 2-2 on page 2-2.*

Table 2-2 • **Recommended Operating Conditions[1,2]**

Symbol	Parameter		Commercial	Industrial	Units
T_J	Junction temperature[2]		0 to + 85	–40 to +100	°C
VCC[3]	1.5 V DC core supply voltage [4]		1.425 to 1.575	1.425 to 1.575	V
	1.2 V–1.5 V wide range core voltage[5,6]		1.14 to 1.575	1.14 to 1.575	V
VJTAG	JTAG DC voltage		1.4 to 3.6	1.4 to 3.6	V
VPUMP[7]	Programming voltage	Programming mode	3.15 to 3.45	3.15 to 3.45	V
		Operation	0 to 3.6	0 to 3.6	V
VCCPLL[8]	Analog power supply (PLL)	1.5 V DC core supply voltage[4]	1.425 to 1.575	1.425 to 1.575	V
		1.2 V–1.5 V wide range core voltage[5]	1.14 to 1.575	1.14 to 1.575	V
VCCI	1.2 V DC supply voltage[5]		1.14 to 1.26	1.14 to 1.26	V
	1.2 V DC wide range supply voltage[5]		1.14 to 1.575	1.14 to 1.575	V
	1.5 V DC supply voltage		1.425 to 1.575	1.425 to 1.575	V
	1.8 V DC supply voltage		1.7 to 1.9	1.7 to 1.9	V
	2.5 V DC supply voltage		2.3 to 2.7	2.3 to 2.7	V
	3.3 V wide range DC supply voltage[9]		2.7 to 3.6	2.7 to 3.6	V
	3.3 V DC supply voltage		3.0 to 3.6	3.0 to 3.6	V

Notes:

1. *All parameters representing voltages are measured with respect to GND unless otherwise specified.*
2. *To ensure targeted reliability standards are met across ambient and junction operating temperatures, Microsemi recommends that the user follow best design practices using Microsemi's timing and power simulation tools.*
3. *The ranges given here are for power supplies only. The recommended input voltage ranges specific to each I/O standard are given in Table 2-21 on page 2-19. VCCI should be at the same voltage within a given I/O bank.*
4. *For IGLOO® PLUS V5 devices*
5. *For IGLOO PLUS V2 devices only, operating at VCCI ≥ VCC.*
6. *All IGLOO PLUS devices (V5 and V2) must be programmed with the VCC core voltage at 1.5 V. Applications using V2 devices powered by a 1.2 V supply must switch the core supply to 1.5 V for in-system programming.*
7. *VPUMP can be left floating during operation (not programming mode).*
8. *VCCPLL pins should be tied to VCC pins. See the Pin Descriptions chapter of the IGLOO PLUS FPGA Fabric User's Guide for further information.*
9. *3.3 V wide range is compliant to the JDEC8b specification and supports 3.0 V VCCI operation.*
10. *VMV pins must be connected to the corresponding VCCI pins. See the "Pin Descriptions" chapter of the IGLOO FPGA Fabric User's Guide for further information.*
11. *Software Default Junction Temperature Range in the Libero SoC software is set to 0°C to +70°C for commercial, and -40°C to +85°C for industrial. To ensure targeted reliability standards are met across the full range of junction temperatures, Microsemi recommends using custom settings for temperature range before running timing and power analysis tools. For more information regarding custom settings, refer to the New Project Dialog Box in the Libero SoC Online Help.*

Table 2-3 • **Flash Programming Limits – Retention, Storage, and Operating Temperature [1]**

Product Grade	Programming Cycles	Program Retention (biased/unbiased)	Maximum Storage Temperature T_{STG} (°C) [2]	Maximum Operating Junction Temperature T_J (°C) [2]
Commercial	500	20 years	110	100
Industrial	500	20 years	110	100

Notes:

1. *This is a stress rating only; functional operation at any condition other than those indicated is not implied.*
2. *These limits apply for program/data retention only. Refer to Table 2-1 on page 2-1 and Table 2-2 for device operating conditions and absolute limits.*

Table 2-4 • **Overshoot and Undershoot Limits [1]**

VCCI	Average VCCI–GND Overshoot or Undershoot Duration as a Percentage of Clock Cycle[2]	Maximum Overshoot/ Undershoot[2]
2.7 V or less	10%	1.4 V
	5%	1.49 V
3 V	10%	1.1 V
	5%	1.19 V
3.3 V	10%	0.79 V
	5%	0.88 V
3.6 V	10%	0.45 V
	5%	0.54 V

Notes:

1. *Based on reliability requirements at 85°C.*
2. *The duration is allowed at one out of six clock cycles. If the overshoot/undershoot occurs at one out of two cycles, the maximum overshoot/undershoot has to be reduced by 0.15 V.*

I/O Power-Up and Supply Voltage Thresholds for Power-On Reset (Commercial and Industrial)

Sophisticated power-up management circuitry is designed into every IGLOO PLUS device. These circuits ensure easy transition from the powered-off state to the powered-up state of the device. The many different supplies can power up in any sequence with minimized current spikes or surges. In addition, the I/O will be in a known state through the power-up sequence. The basic principle is shown in Figure 2-1 on page 2-4.

There are five regions to consider during power-up.

IGLOO PLUS I/Os are activated only if ALL of the following three conditions are met:

1. VCC and VCCI are above the minimum specified trip points (Figure 2-1 and Figure 2-2 on page 2-5).
2. VCCI > VCC – 0.75 V (typical)
3. Chip is in the operating mode.

VCCI **Trip Point:**
Ramping up (V5 devices): 0.6 V < trip_point_up < 1.2 V
Ramping down (V5 devices): 0.5 V < trip_point_down < 1.1 V
Ramping up (V2 devices): 0.75 V < trip_point_up < 1.05 V
Ramping down (V2 devices): 0.65 V < trip_point_down < 0.95 V

VCC **Trip Point:**
Ramping up (V5 devices): 0.6 V < trip_point_up < 1.1 V
Ramping down (V5 devices): 0.5 V < trip_point_down < 1.0 V

Ramping up (V2 devices): 0.65 V < trip_point_up < 1.05 V
Ramping down (V2 devices): 0.55 V < trip_point_down < 0.95 V

VCC and VCCI ramp-up trip points are about 100 mV higher than ramp-down trip points. This specifically built-in hysteresis prevents undesirable power-up oscillations and current surges. Note the following:

- During programming, I/Os become tristated and weakly pulled up to VCCI.
- JTAG supply, PLL power supplies, and charge pump VPUMP supply have no influence on I/O behavior.

PLL Behavior at Brownout Condition

Microsemi recommends using monotonic power supplies or voltage regulators to ensure proper power-up behavior. Power ramp-up should be monotonic at least until VCC and VCCPLX exceed brownout activation levels (see Figure 2-1 and Figure 2-2 on page 2-5 for more details).

When PLL power supply voltage and/or VCC levels drop below the VCC brownout levels (0.75 V ± 0.25 V for V5 devices, and 0.75 V ± 0.2 V for V2 devices), the PLL output lock signal goes Low and/or the output clock is lost. Refer to the "Brownout Voltage" section in the "Power-Up/-Down Behavior of Low Power Flash Devices" chapter of the *IGLOO PLUS Device Family User's Guide* for information on clock and lock recovery.

Internal Power-Up Activation Sequence

1. Core
2. Input buffers
3. Output buffers, after 200 ns delay from input buffer activation

To make sure the transition from input buffers to output buffers is clean, ensure that there is no path longer than 100 ns from input buffer to output buffer in your design.

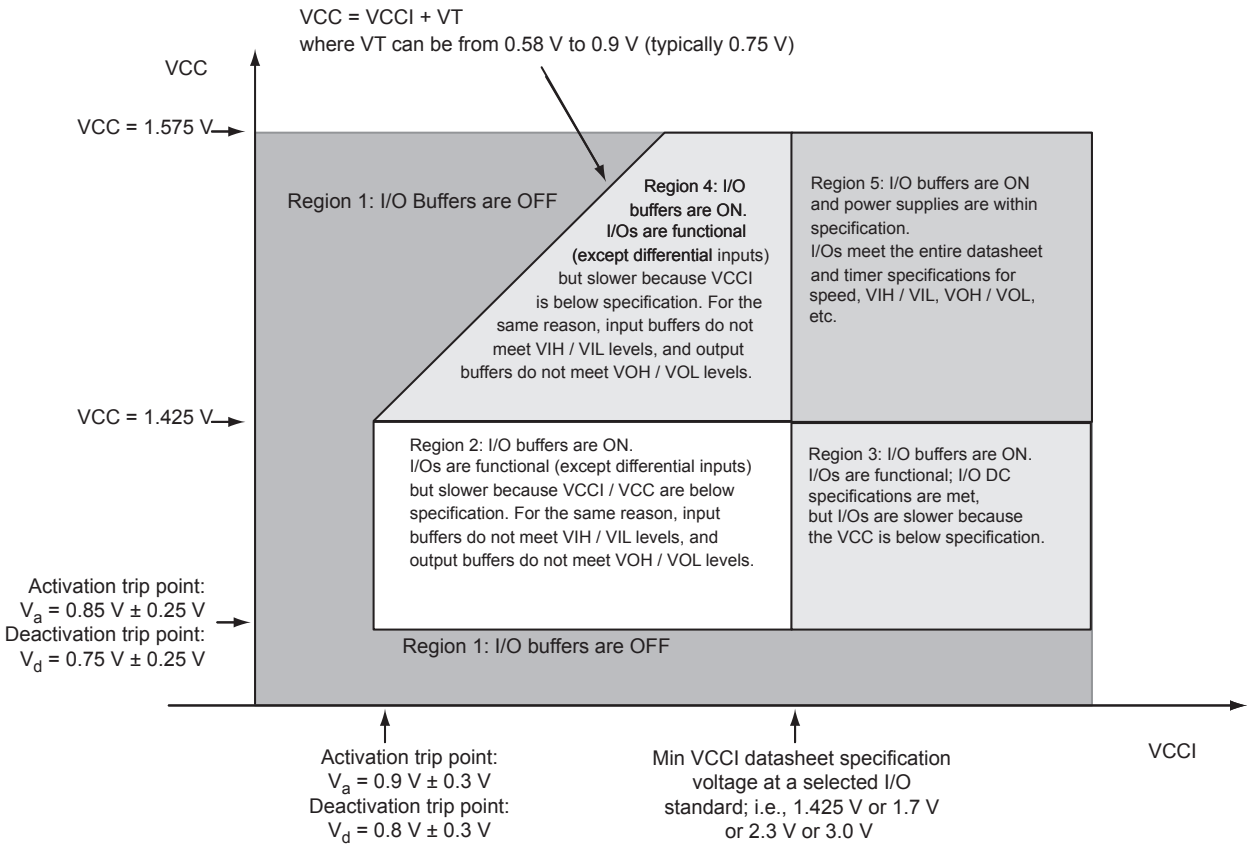

Figure 2-1 • **V5 Devices – I/O State as a Function of VCCI and VCC Voltage Levels**

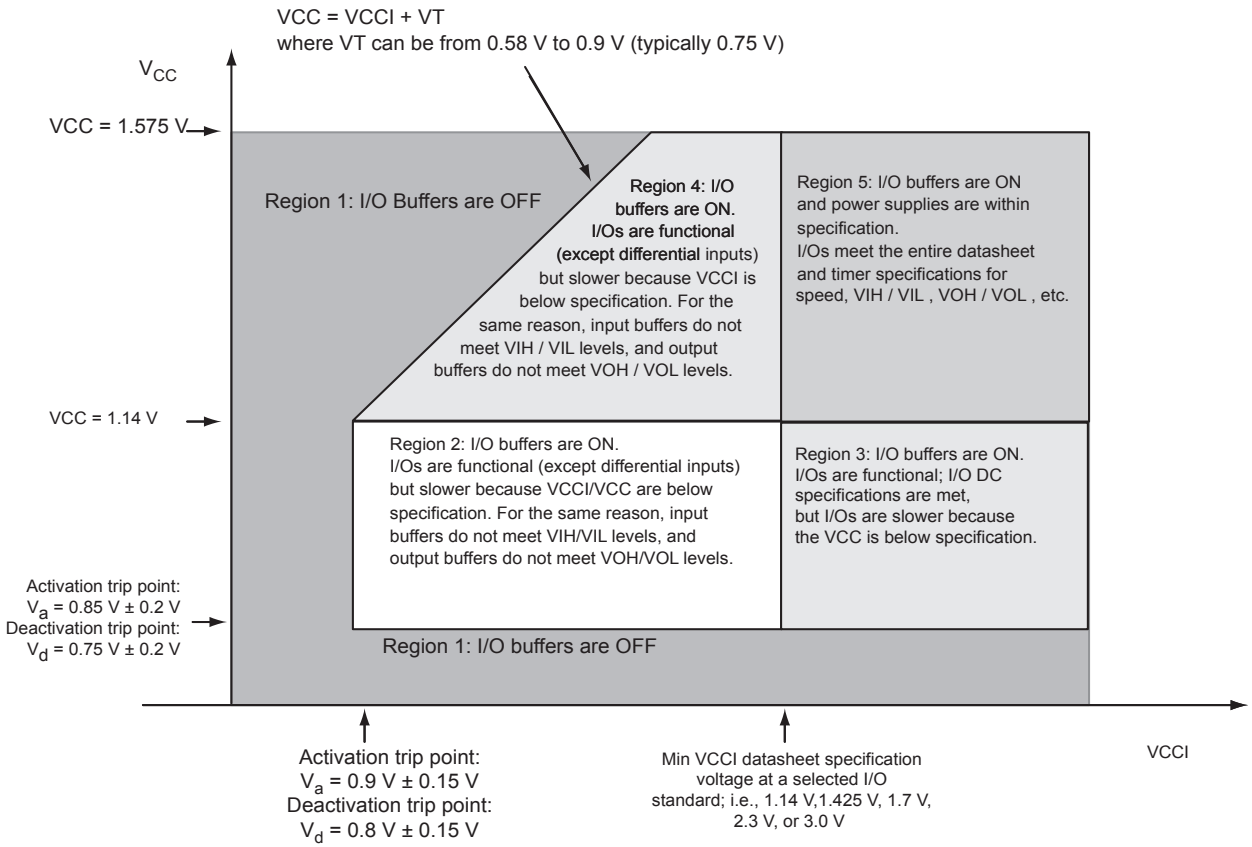

Figure 2-2 • **V2 Devices – I/O State as a Function of VCCI and VCC Voltage Levels**

Thermal Characteristics

Introduction

The temperature variable in the Microsemi Designer software refers to the junction temperature, not the ambient temperature. This is an important distinction because dynamic and static power consumption cause the chip junction temperature to be higher than the ambient temperature.

EQ 1 can be used to calculate junction temperature.

$$T_J = \text{Junction Temperature} = \Delta T + T_A \qquad \textit{EQ 1}$$

where:

T_A = Ambient temperature

ΔT = Temperature gradient between junction (silicon) and ambient $\Delta T = \theta_{ja} * P$

θ_{ja} = Junction-to-ambient of the package. θ_{ja} numbers are located in Figure 2-5.

P = Power dissipation

Package Thermal Characteristics

The device junction-to-case thermal resistivity is θ_{jc} and the junction-to-ambient air thermal resistivity is θ_{ja}. The thermal characteristics for θ_{ja} are shown for two air flow rates. The maximum operating junction temperature is 100°C. EQ 2 shows a sample calculation of the maximum operating power dissipation allowed for a 484-pin FBGA package at commercial temperature and in still air.

$$\text{Maximum Power Allowed} = \frac{\text{Max. junction temp. } (°C) - \text{Max. ambient temp. } (°C)}{\theta_{ja}(°C/W)} = \frac{100°C - 70°C}{20.5°C/W} = 1.46\ W$$

EQ 2

Table 2-5 • **Package Thermal Resistivities**

Package Type	Device	Pin Count	θ_{jc}	θ_{jb}	θ_{ja}			Unit
					Still Air	1 m/s	2.5 m/s	
Chip Scale Package (CSP)	AGLP030	CS201	-	-	46.3	-	-	C/W
	AGLP060	CS201	7.1	19.7	40.5	35.1	32.9	C/W
	AGLP060	CS289	13.9	34.1	48.7	43.5	41.9	C/W
	AGLP125	CS289	10.8	27.9	42.2	37.1	35.5	C/W
	AGLP125	CS281	11.3	17.6	-	-	-	C/W
Thin Quad Flat Package (VQ)	AGLP030	VQ128	18.0	50.0	56.0	49.0	47.0	C/W
	AGLP060	VQ176	21.0	55.0	58.0	52.0	50.0	C/W

Temperature and Voltage Derating Factors

Table 2-6 • **Temperature and Voltage Derating Factors for Timing Delays (normalized to T_J = 70°C, VCC = 1.425 V)**
For IGLOO PLUS V2 or V5 devices, 1.5 V DC Core Supply Voltage

Array Voltage VCC (V)	Junction Temperature (°C)					
	–40°C	0°C	25°C	70°C	85°C	100°C
1.425	0.934	0.953	0.971	1.000	1.007	1.013
1.5	0.855	0.874	0.891	0.917	0.924	0.929
1.575	0.799	0.816	0.832	0.857	0.864	0.868

Table 2-7 • **Temperature and Voltage Derating Factors for Timing Delays (normalized to T_J = 70°C, VCC = 1.14 V)**
For IGLOO PLUS V2, 1.2 V DC Core Supply Voltage

Array Voltage VCC (V)	Junction Temperature (°C)					
	–40°C	0°C	25°C	70°C	85°C	100°C
1.14	0.963	0.975	0.989	1.000	1.007	1.011
1.2	0.853	0.865	.0877	0.893	0.893	0.897
1.26	0.781	0.792	0.803	0.813	0.819	0.822

Calculating Power Dissipation

Quiescent Supply Current

Quiescent supply current (I_{DD}) calculation depends on multiple factors, including operating voltages (VCC, VCCI, and VJTAG), operating temperature, system clock frequency, and power mode usage. Microsemi recommends using the Power Calculator and SmartPower software estimation tools to evaluate the projected static and active power based on the user design, power mode usage, operating voltage, and temperature.

Table 2-8 • **Power Supply State per Mode**

Modes/Power Supplies	Power Supply Configurations				
	VCC	VCCPLL	VCCI	VJTAG	VPUMP
Flash*Freeze	On	On	On	On	On/off/floating
Sleep	Off	Off	On	Off	Off
Shutdown	Off	Off	Off	Off	Off
No Flash*Freeze	On	On	On	On	On/off/floating

Note: Off: Power Supply level = 0 V

Table 2-9 • **Quiescent Supply Current (IDD) Characteristics, IGLOO PLUS Flash*Freeze Mode***

	Core Voltage	AGLP030	AGLP060	AGLP125	Units
Typical (25°C)	1.2 V	4	8	13	µA
	1.5 V	6	10	18	µA

*Note: *IDD includes VCC, VPUMP, VCCI, VJTAG, and VCCPLL currents.*

Table 2-10 • **Quiescent Supply Current (IDD) Characteristics, IGLOO PLUS Sleep Mode***

ICCI Current	Core Voltage	AGLP030	AGLP060	AGLP125	Units
VCCI = 1.2 V (per bank) Typical (25°C)	1.2 V	1.7	1.7	1.7	µA
VCCI = 1.5 V (per bank) Typical (25°C)	1.2 V / 1.5 V	1.8	1.8	1.8	µA
VCCI = 1.8 V (per bank) Typical (25°C)	1.2 V / 1.5 V	1.9	1.9	1.9	µA
VCCI = 2.5 V (per bank) Typical (25°C)	1.2 V / 1.5 V	2.2	2.2	2.2	µA
VCCI = 3.3 V (per bank) Typical (25°C)	1.2 V / 1.5 V	2.5	2.5	2.5	µA

*Note: *IDD = N_{BANKS} * ICCI*

Table 2-11 • **Quiescent Supply Current (IDD) Characteristics, IGLOO PLUS Shutdown Mode**

	Core Voltage	AGLP030	AGLP060	AGLP125	Units
Typical (25°C)	1.2 V / 1.5 V	0	0	0	µA

Table 2-12 **• Quiescent Supply Current (IDD), No IGLOO PLUS Flash*Freeze Mode [1]**

	Core Voltage	AGLP030	AGLP060	AGLP125	Units
ICCA Current [2]					
Typical (25°C)	1.2 V	6	10	13	µA
	1.5 V	16	20	28	µA
ICCI or IJTAG Current					
VCCI / VJTAG = 1.2 V (per bank) Typical (25°C)	1.2 V	1.7	1.7	1.7	µA
VCCI / VJTAG = 1.5 V (per bank) Typical (25°C)	1.2 V / 1.5 V	1.8	1.8	1.8	µA
VCCI / VJTAG = 1.8 V (per bank) Typical (25°C)	1.2 V / 1.5 V	1.9	1.9	1.9	µA
VCCI / VJTAG = 2.5 V (per bank) Typical (25°C)	1.2 V / 1.5 V	2.2	2.2	2.2	µA
VCCI / VJTAG = 3.3 V (per bank) Typical (25°C)	1.2 V / 1.5 V	2.5	2.5	2.5	µA

Notes:

1. *IDD = N_{BANKS} * ICCI + ICCA. JTAG counts as one bank when powered.*
2. *Includes VCC, VCCPLL, and VPUMP currents.*

Power per I/O Pin

***Table 2-13* • Summary of I/O Input Buffer Power (per pin) – Default I/O Software Settings**

	VCCI (V)	Dynamic Power PAC9 (µW/MHz) [1]
Single-Ended		
3.3 V LVTTL / 3.3 V LVCMOS	3.3	16.26
3.3 V LVTTL / 3.3 V LVCMOS – Schmitt Trigger	3.3	18.95
3.3 V LVCMOS Wide Range[2]	3.3	16.26
3.3 V LVCMOS Wide Range[2] – Schmitt Trigger	3.3	18.95
2.5 V LVCMOS	2.5	4.59
2.5 V LVCMOS – Schmitt Trigger	2.5	6.01
1.8 V LVCMOS	1.8	1.61
1.8 V LVCMOS – Schmitt Trigger	1.8	1.70
1.5 V LVCMOS (JESD8-11)	1.5	0.96
1.5 V LVCMOS (JESD8-11) – Schmitt Trigger	1.5	0.90
1.2 V LVCMOS[3]	1.2	0.55
1.2 V LVCMOS[3] – Schmitt Trigger	1.2	0.47
1.2 V LVCMOS Wide Range[3]	1.2	0.55
1.2 V LVCMOS Wide Range[3] – Schmitt Trigger	1.2	0.47

Notes:

1. *PAC9 is the total dynamic power measured on VCCI.*
2. *All LVCMOS 3.3 V software macros support LVCMOS 3.3 V wide range as specified in the JESD-8B specification.*
3. *Applicable for IGLOO PLUS V2 devices only, operating at VCCI ≥ VCC.*

***Table 2-14* • Summary of I/O Output Buffer Power (per pin) – Default I/O Software Settings[1]**

	C_{LOAD} (pF)	VCCI (V)	Dynamic Power PAC10 (µW/MHz)[2]
Single-Ended			
3.3 V LVTTL / 3.3 V LVCMOS	5	3.3	127.11
3.3 V LVCMOS Wide Range[3]	5	3.3	127.11
2.5 V LVCMOS	5	2.5	70.71
1.8 V LVCMOS	5	1.8	35.57
1.5 V LVCMOS (JESD8-11)	5	1.5	24.30
1.2 V LVCMOS[4]	5	1.2	15.22
1.2 V LVCMOS Wide Range[4]	5	1.2	15.22

Notes:

1. *Dynamic power consumption is given for standard load and software default drive strength and output slew.*
2. *PAC10 is the total dynamic power measured on VCCI.*
3. *All LVCMOS 3.3 V software macros support LVCMOS 3.3 V wide range as specified in the JESD-8B specification.*
4. *Applicable for IGLOO PLUS V2 devices only, operating at VCCI ≥ VCC.*

Power Consumption of Various Internal Resources

***Table 2-15* • Different Components Contributing to Dynamic Power Consumption in IGLOO PLUS Devices For IGLOO PLUS V2 or V5 Devices, 1.5 V Core Supply Voltage**

Parameter	Definition	Device Specific Dynamic Power (µW/MHz)		
		AGLP125	AGLP060	AGLP030
PAC1	Clock contribution of a Global Rib	4.489	2.696	0.000[1]
PAC2	Clock contribution of a Global Spine	1.991	1.962	3.499
PAC3	Clock contribution of a VersaTile row	1.510	1.523	1.537
PAC4	Clock contribution of a VersaTile used as a sequential module	0.153	0.151	0.151
PAC5	First contribution of a VersaTile used as a sequential module	0.029	0.029	0.029
PAC6	Second contribution of a VersaTile used as a sequential module	0.323	0.323	0.323
PAC7	Contribution of a VersaTile used as a combinatorial module	0.280	0.300	0.278
PAC8	Average contribution of a routing net	1.097	1.081	1.130
PAC9	Contribution of an I/O input pin (standard-dependent)	See Table 2-13 on page 2-9.		
PAC10	Contribution of an I/O output pin (standard-dependent)	See Table 2-14 on page 2-9.		
PAC11	Average contribution of a RAM block during a read operation	25.00		
PAC12	Average contribution of a RAM block during a write operation	30.00		
PAC13	Dynamic contribution for PLL	2.70		

Note: 1. There is no Center Global Rib present in AGLP030, and thus it starts directly at the spine resulting in 0µW/MHz.

***Table 2-16* • Different Components Contributing to the Static Power Consumption in IGLOO PLUS Devices For IGLOO PLUS V2 or V5 Devices, 1.5 V Core Supply Voltage**

Parameter	Definition	Device-Specific Static Power (mW)		
		AGLP125	AGLP060	AGLP030
PDC1	Array static power in Active mode	See Table 2-12 on page 2-8		
PDC2	Array static power in Static (Idle) mode	See Table 2-11 on page 2-7		
PDC3	Array static power in Flash*Freeze mode	See Table 2-9 on page 2-7		
PDC4	Static PLL contribution	1.84[1]		
PDC5	Bank quiescent power (VCCI-dependent)	See Table 2-12 on page 2-8		

Notes:

1. *This is the minimum contribution of the PLL when operating at lowest frequency.*
2. *For a different output load, drive strength, or slew rate, Microsemi recommends using the Microsemi power spreadsheet calculator or the SmartPower tool in Libero SoC software.*

***Table 2-17* • Different Components Contributing to Dynamic Power Consumption in IGLOO PLUS Devices For IGLOO PLUS V2 Devices, 1.2 V Core Supply Voltage**

Parameter	Definition	Device-Specific Dynamic Power (µW/MHz)		
		AGLP125	AGLP060	AGLP030
PAC1	Clock contribution of a Global Rib	2.874	1.727	0.000[1]
PAC2	Clock contribution of a Global Spine	1.264	1.244	2.241
PAC3	Clock contribution of a VersaTile row	0.963	0.975	0.981
PAC4	Clock contribution of a VersaTile used as a sequential module	0.098	0.096	0.096
PAC5	First contribution of a VersaTile used as a sequential module	0.018	0.018	0.018
PAC6	Second contribution of a VersaTile used as a sequential module	0.203	0.203	0.203
PAC7	Contribution of a VersaTile used as a combinatorial module	0.160	0.170	0.158
PAC8	Average contribution of a routing net	0.679	0.686	0.748
PAC9	Contribution of an I/O input pin (standard-dependent)	See Table 2-13 on page 2-9		
PAC10	Contribution of an I/O output pin (standard-dependent)	See Table 2-14 on page 2-9		
PAC11	Average contribution of a RAM block during a read operation	25.00		
PAC12	Average contribution of a RAM block during a write operation	30.00		
PAC13	Dynamic contribution for PLL	2.10		

Note: 1. There is no Center Global Rib present in AGLP030, and thus it starts directly at the spine resulting in 0µW/MHz.

***Table 2-18* • Different Components Contributing to the Static Power Consumption in IGLOO PLUS Devices For IGLOO PLUS V2 Devices, 1.2 V Core Supply Voltage**

Parameter	Definition	Device-Specific Static Power (mW)		
		AGLP125	AGLP060	AGLP030
PDC1	Array static power in Active mode	See Table 2-12 on page 2-8		
PDC2	Array static power in Static (Idle) mode	See Table 2-11 on page 2-7		
PDC3	Array static power in Flash*Freeze mode	See Table 2-9 on page 2-7		
PDC4	Static PLL contribution	0.90[1]		
PDC5	Bank quiescent power (VCCI-dependent)	See Table 2-12 on page 2-8		

Notes:

1. *This is the minimum contribution of the PLL when operating at lowest frequency.*
2. *For a different output load, drive strength, or slew rate, Microsemi recommends using the Microsemi power spreadsheet calculator or the SmartPower tool in Libero SoC software.*

Power Calculation Methodology

This section describes a simplified method to estimate power consumption of an application. For more accurate and detailed power estimations, use the SmartPower tool in Libero SoC software.

The power calculation methodology described below uses the following variables:

- The number of PLLs as well as the number and the frequency of each output clock generated
- The number of combinatorial and sequential cells used in the design
- The internal clock frequencies
- The number and the standard of I/O pins used in the design
- The number of RAM blocks used in the design
- Toggle rates of I/O pins as well as VersaTiles—guidelines are provided in Table 2-19 on page 2-14.
- Enable rates of output buffers—guidelines are provided for typical applications in Table 2-20 on page 2-14.
- Read rate and write rate to the memory—guidelines are provided for typical applications in Table 2-20 on page 2-14. The calculation should be repeated for each clock domain defined in the design.

Methodology

Total Power Consumption—P_{TOTAL}

$P_{TOTAL} = P_{STAT} + P_{DYN}$

P_{STAT} is the total static power consumption.

P_{DYN} is the total dynamic power consumption.

Total Static Power Consumption—P_{STAT}

P_{STAT} = (PDC1 or PDC2 or PDC3) + N_{BANKS} * PDC5

N_{BANKS} is the number of I/O banks powered in the design.

Total Dynamic Power Consumption—P_{DYN}

$P_{DYN} = P_{CLOCK} + P_{S\text{-}CELL} + P_{C\text{-}CELL} + P_{NET} + P_{INPUTS} + P_{OUTPUTS} + P_{MEMORY} + P_{PLL}$

Global Clock Contribution—P_{CLOCK}

P_{CLOCK} = (PAC1 + N_{SPINE}*PAC2 + N_{ROW}*PAC3 + $N_{S\text{-}CELL}$* PAC4) * F_{CLK}

N_{SPINE} is the number of global spines used in the user design—guidelines are provided in the "Spine Architecture" section of the Global Resources chapter in the *IGLOO PLUS FPGA Fabric User's Guide*.

N_{ROW} is the number of VersaTile rows used in the design—guidelines are provided in the "Spine Architecture" section of the Global Resources chapter in the *IGLOO PLUS FPGA Fabric User's Guide*.

F_{CLK} is the global clock signal frequency.

$N_{S\text{-}CELL}$ is the number of VersaTiles used as sequential modules in the design.

PAC1, PAC2, PAC3, and PAC4 are device-dependent.

Sequential Cells Contribution—$P_{S\text{-}CELL}$

$P_{S\text{-}CELL} = N_{S\text{-}CELL}$ * (PAC5 + α_1 / 2 * PAC6) * F_{CLK}

$N_{S\text{-}CELL}$ is the number of VersaTiles used as sequential modules in the design. When a multi-tile sequential cell is used, it should be accounted for as 1.

α_1 is the toggle rate of VersaTile outputs—guidelines are provided in Table 2-19 on page 2-14.

F_{CLK} is the global clock signal frequency.

Combinatorial Cells Contribution—$P_{C\text{-}CELL}$

$P_{C\text{-}CELL} = N_{C\text{-}CELL} * \alpha_1 / 2 * PAC7 * F_{CLK}$

$N_{C\text{-}CELL}$ is the number of VersaTiles used as combinatorial modules in the design.

α_1 is the toggle rate of VersaTile outputs—guidelines are provided in Table 2-19 on page 2-14.

F_{CLK} is the global clock signal frequency.

Routing Net Contribution—P_{NET}

$P_{NET} = (N_{S\text{-}CELL} + N_{C\text{-}CELL}) * \alpha_1 / 2 * PAC8 * F_{CLK}$

$N_{S\text{-}CELL}$ is the number of VersaTiles used as sequential modules in the design.

$N_{C\text{-}CELL}$ is the number of VersaTiles used as combinatorial modules in the design.

α_1 is the toggle rate of VersaTile outputs—guidelines are provided in Table 2-19 on page 2-14.

F_{CLK} is the global clock signal frequency.

I/O Input Buffer Contribution—P_{INPUTS}

$P_{INPUTS} = N_{INPUTS} * \alpha_2 / 2 * P_{AC9} * F_{CLK}$

N_{INPUTS} is the number of I/O input buffers used in the design.

α_2 is the I/O buffer toggle rate—guidelines are provided in Table 2-19 on page 2-14.

F_{CLK} is the global clock signal frequency.

I/O Output Buffer Contribution—$P_{OUTPUTS}$

$P_{OUTPUTS} = N_{OUTPUTS} * \alpha_2 / 2 * \beta_1 * PAC10 * F_{CLK}$

$N_{OUTPUTS}$ is the number of I/O output buffers used in the design.

α_2 is the I/O buffer toggle rate—guidelines are provided in Table 2-19 on page 2-14.

β_1 is the I/O buffer enable rate—guidelines are provided in Table 2-20 on page 2-14.

F_{CLK} is the global clock signal frequency.

RAM Contribution—P_{MEMORY}

$P_{MEMORY} = P_{AC11} * N_{BLOCKS} * F_{READ\text{-}CLOCK} * \beta_2 + PAC12 * N_{BLOCK} * F_{WRITE\text{-}CLOCK} * \beta_3$

N_{BLOCKS} is the number of RAM blocks used in the design.

$F_{READ\text{-}CLOCK}$ is the memory read clock frequency.

β_2 is the RAM enable rate for read operations.

$F_{WRITE\text{-}CLOCK}$ is the memory write clock frequency.

β_3 is the RAM enable rate for write operations—guidelines are provided in Table 2-20 on page 2-14.

PLL Contribution—P_{PLL}

$P_{PLL} = PDC4 + PAC1_3 * F_{CLKOUT}$

F_{CLKOUT} is the output clock frequency.[1]

Guidelines

Toggle Rate Definition

A toggle rate defines the frequency of a net or logic element relative to a clock. It is a percentage. If the toggle rate of a net is 100%, this means that this net switches at half the clock frequency. Below are some examples:

- The average toggle rate of a shift register is 100% because all flip-flop outputs toggle at half of the clock frequency.
- The average toggle rate of an 8-bit counter is 25%:

1. *If a PLL is used to generate more than one output clock, include each output clock in the formula by adding its corresponding contribution ($P_{AC13} * F_{CLKOUT}$ product) to the total PLL contribution.*

- Bit 0 (LSB) = 100%
- Bit 1 = 50%
- Bit 2 = 25%
- …
- Bit 7 (MSB) = 0.78125%
- Average toggle rate = (100% + 50% + 25% + 12.5% + . . . + 0.78125%) / 8

Enable Rate Definition

Output enable rate is the average percentage of time during which tristate outputs are enabled. When nontristate output buffers are used, the enable rate should be 100%.

Table 2-19 **• Toggle Rate Guidelines Recommended for Power Calculation**

Component	Definition	Guideline
α_1	Toggle rate of VersaTile outputs	10%
α_2	I/O buffer toggle rate	10%

Table 2-20 **• Enable Rate Guidelines Recommended for Power Calculation**

Component	Definition	Guideline
β_1	I/O output buffer enable rate	100%
β_2	RAM enable rate for read operations	12.5%
β_3	RAM enable rate for write operations	12.5%

User I/O Characteristics

Timing Model

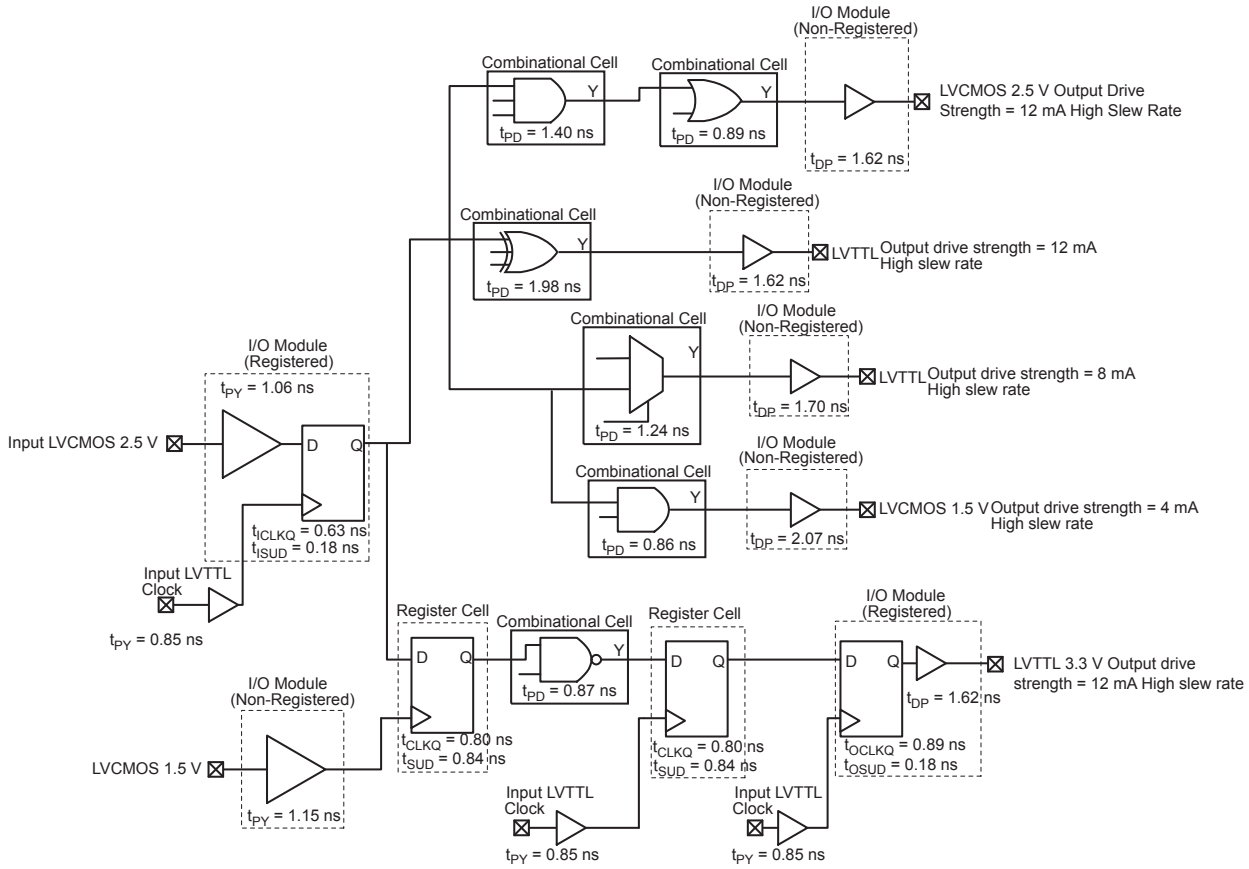

Figure 2-3 • **Timing Model**
Operating Conditions: STD Speed, Commercial Temperature Range (T_J = 70°C), Worst-Case VCC = 1.425 V, for DC 1.5 V Core Voltage, Applicable to V2 and V5 Devices

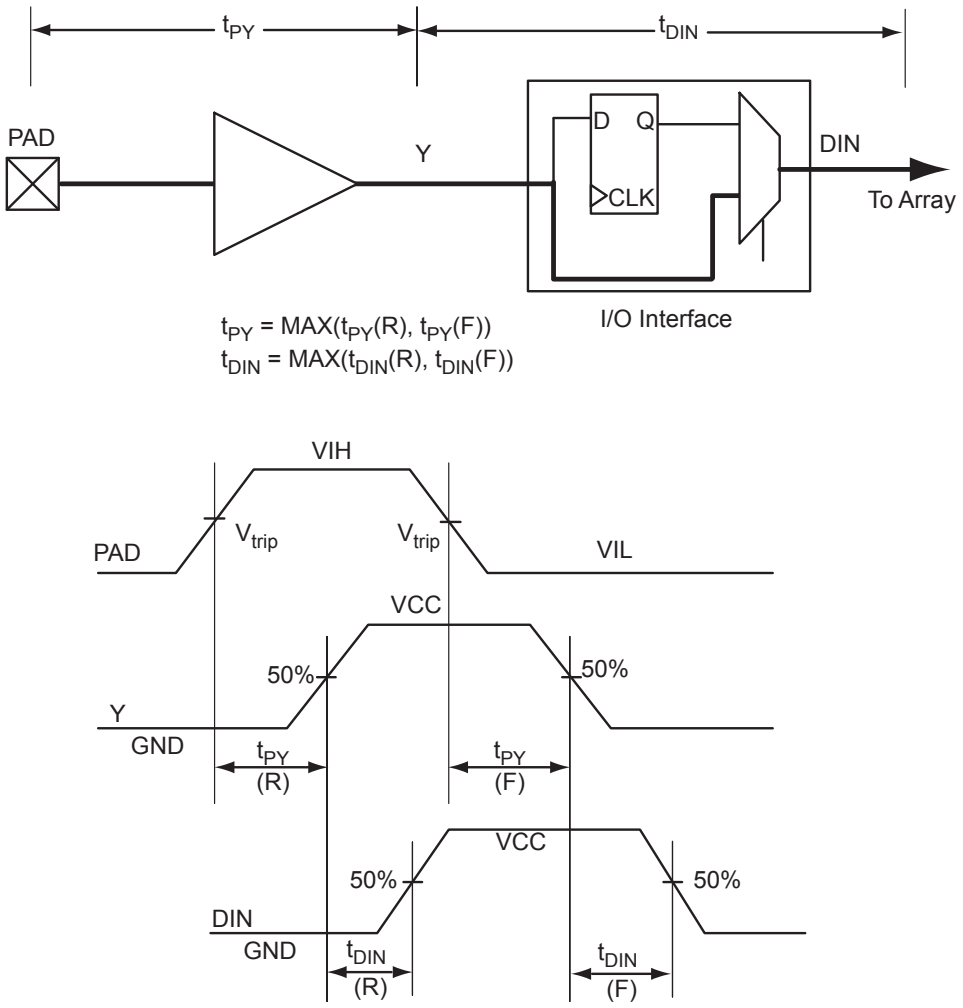

Figure 2-4 • **Input Buffer Timing Model and Delays (example)**

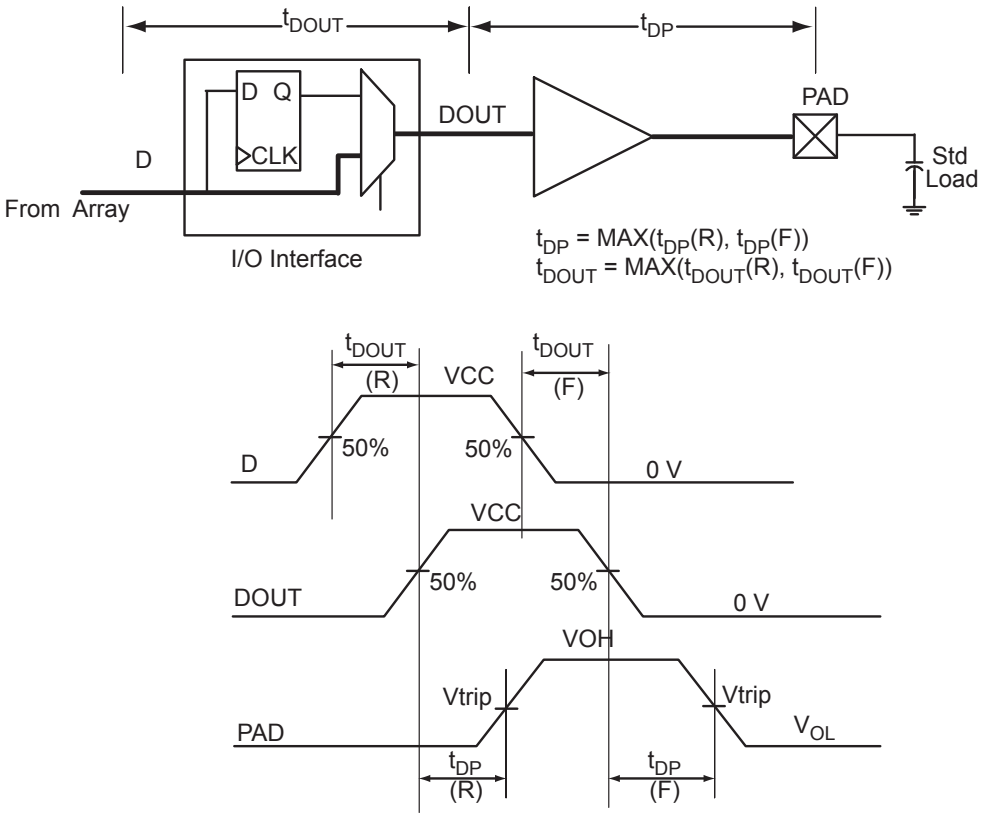

Figure 2-5 • **Output Buffer Model and Delays (example)**

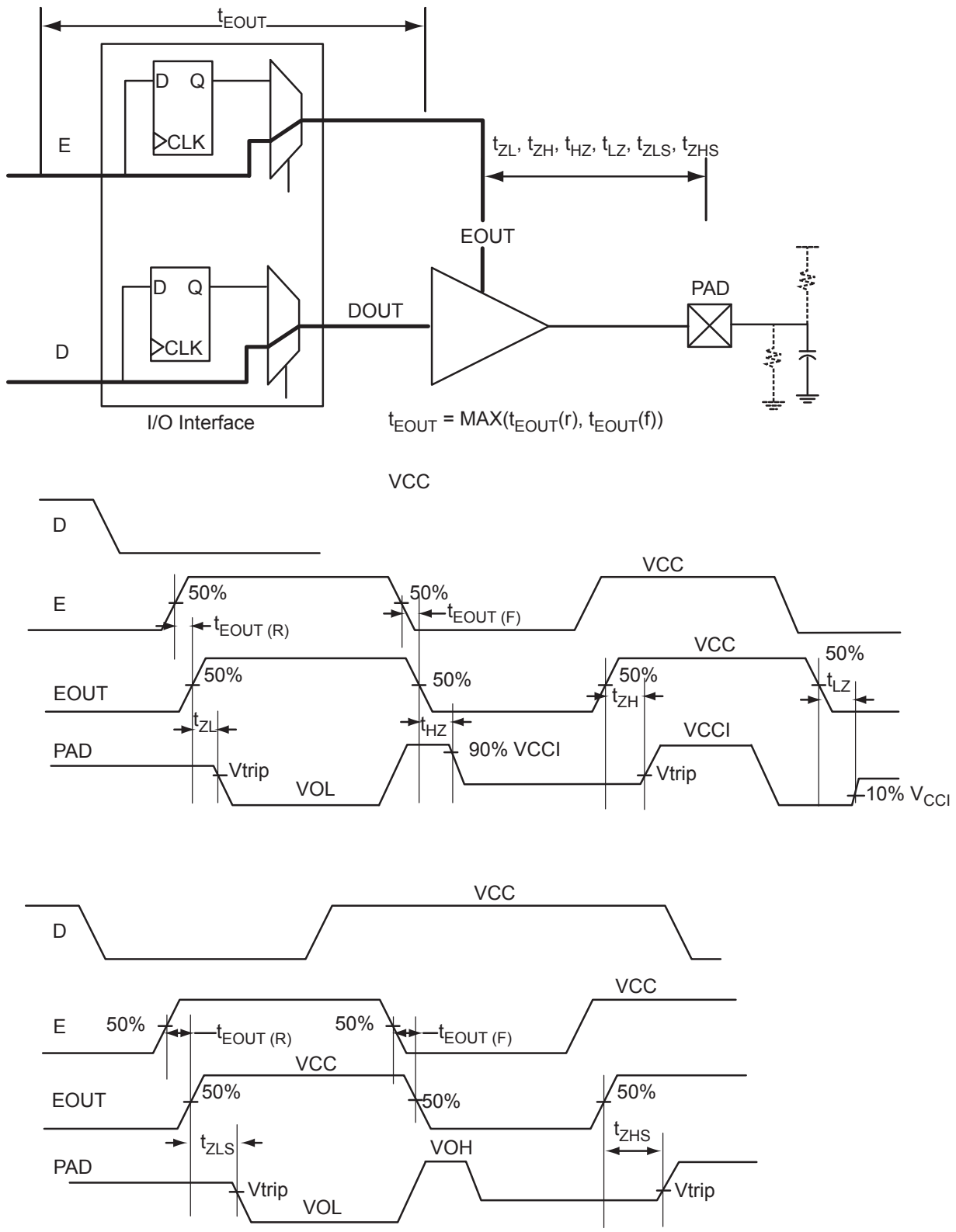

Figure 2-6 • **Tristate Output Buffer Timing Model and Delays (example)**

Overview of I/O Performance

Summary of I/O DC Input and Output Levels – Default I/O Software Settings

***Table 2-21* • Summary of Maximum and Minimum DC Input and Output Levels Applicable to Commercial and Industrial Conditions—Software Default Settings**

I/O Standard	Drive Strength	Equiv. Software Default Drive Strength Option[2]	Slew Rate	VIL		VIH		VOL	VOH	IOL[1]	IOH[1]
				Min. V	Max. V	Min. V	Max. V	Max. V	Min. V	mA	mA
3.3 V LVTTL / 3.3 V LVCMOS	12 mA	12 mA	High	–0.3	0.8	2	3.6	0.4	2.4	12	12
3.3 V LVCMOS Wide Range[3]	100 µA	12 mA	High	–0.3	0.8	2	3.6	0.2	VDD 3 0.2	0.1	0.1
2.5 V LVCMOS	12 mA	12 mA	High	–0.3	0.7	1.7	3.6	0.7	1.7	12	12
1.8 V LVCMOS	8 mA	8 mA	High	–0.3	0.35 * VCCI	0.65 * VCCI	3.6	0.45	VCCI – 0.45	8	8
1.5 V LVCMOS	4 mA	4 mA	High	–0.3	0.35 * VCCI	0.65 * VCCI	3.6	0.25 * VCCI	0.75 * VCCI	4	4
1.2 V LVCMOS[4]	2 mA	2 mA	High	–0.3	0.35 * VCCI	0.65 * VCCI	3.6	0.25 * VCCI	0.75 * VCCI	2	2
1.2 V LVCMOS Wide Range[4,5]	100 µA	2 mA	High	–0.3	0.3 * VCCI	0.7 * VCCI	3.6	0.1	VCCI – 0.1	0.1	0.1

Notes:

1. *Currents are measured at 85°C junction temperature.*
2. *Note that 1.2 V LVCMOS and 3.3 V LVCMOS wide range are applicable to 100 µA drive strength only. The configuration will not operate at the equivalent software default drive strength. These values are for normal ranges only.*
3. *All LVCMOS 3.3 V software macros support LVCMOS 3.3 V wide range as specified in the JESD-8B specification.*
4. *Applicable to IGLOO PLUS V2 devices operating at $VCC_I \geq VCC$.*
5. *All LVCMOS 1.2 V software macros support LVCMOS 1.2 V wide range as specified in the JESD8-12 specification.*

***Table 2-22* • Summary of Maximum and Minimum DC Input Levels Applicable to Commercial and Industrial Conditions**

	Commercial[1]		Industrial[2]	
	IIL[3]	IIH[4]	IIL[3]	IIH[4]
DC I/O Standards	**µA**	**µA**	**µA**	**µA**
3.3 V LVTTL / 3.3 V LVCMOS	10	10	15	15
3.3 V LVCMOS Wide Range	10	10	15	15
2.5 V LVCMOS	10	10	15	15
1.8 V LVCMOS	10	10	15	15
1.5 V LVCMOS	10	10	15	15
1.2 V LVCMOS[5]	10	10	15	15
1.2 V LVCMOS Wide Range[5]	10	10	15	15

Notes:

1. *Commercial range (0°C < T_A < 70°C)*
2. *Industrial range (–40°C < T_A < 85°C)*
3. *IIL is the input leakage current per I/O pin over recommended operation conditions where –0.3 V < VIN < VIL.*
4. *IIH is the input leakage current per I/O pin over recommended operating conditions VIH < VIN < VCCI. Input current is larger when operating outside recommended ranges.*
5. *Applicable to IGLOO PLUS V2 devices operating at VCCI ³ VCC.*

Summary of I/O Timing Characteristics – Default I/O Software Settings

***Table 2-23* • Summary of AC Measuring Points**

Standard	Measuring Trip Point (Vtrip)
3.3 V LVTTL / 3.3 V LVCMOS	1.4 V
3.3 V LVCMOS Wide Range	1.4 V
2.5 V LVCMOS	1.2 V
1.8 V LVCMOS	0.90 V
1.5 V LVCMOS	0.75 V
1.2 V LVCMOS	0.60 V
1.2 V LVCMOS Wide Range	0.60 V

***Table 2-24* • I/O AC Parameter Definitions**

Parameter	Parameter Definition
t_{DP}	Data to Pad delay through the Output Buffer
t_{PY}	Pad to Data delay through the Input Buffer
t_{DOUT}	Data to Output Buffer delay through the I/O interface
t_{EOUT}	Enable to Output Buffer Tristate Control delay through the I/O interface
t_{DIN}	Input Buffer to Data delay through the I/O interface
t_{HZ}	Enable to Pad delay through the Output Buffer—High to Z
t_{ZH}	Enable to Pad delay through the Output Buffer—Z to High
t_{LZ}	Enable to Pad delay through the Output Buffer—Low to Z
t_{ZL}	Enable to Pad delay through the Output Buffer—Z to Low
t_{ZHS}	Enable to Pad delay through the Output Buffer with delayed enable—Z to High
t_{ZLS}	Enable to Pad delay through the Output Buffer with delayed enable—Z to Low

Table 2-25 **• Summary of I/O Timing Characteristics—Software Default Settings, STD Speed Grade, Commercial-Case Conditions: T_J = 70°C, Worst-Case VCC = 1.425 V, Worst-Case VCCI = 3.0 V**

I/O Standard	Drive Strength	Equivalent Software Default Drive Strength Option[1]	Slew Rate	Capacitive Load (pF)	External Resistor (Ω)	t_{DOUT}	t_{DP}	t_{DIN}	t_{PY}	t_{PYS}	t_{EOUT}	t_{ZL}	t_{ZH}	t_{LZ}	t_{HZ}	Units
3.3 V LVTTL / 3.3 V LVCMOS	12 mA	12 mA	High	5 pF	–	0.97	1.76	0.18	0.85	1.15	0.66	1.80	1.39	2.20	2.64	ns
3.3 V LVCMOS Wide Range[2]	100 µA	12 mA	High	5 pF	–	0.97	2.47	0.18	1.18	1.64	0.66	2.48	1.91	3.16	3.76	ns
2.5 V LVCMOS	12 mA	12 mA	High	5 pF	–	0.97	1.77	0.18	1.06	1.22	0.66	1.81	1.51	2.22	2.56	ns
1.8 V LVCMOS	8 mA	8 mA	High	5 pF	–	0.97	2.00	0.18	1.00	1.43	0.66	2.04	1.76	2.29	2.55	ns
1.5 V LVCMOS	4 mA	4 mA	High	5 pF	–	0.97	2.29	0.18	1.16	1.62	0.66	2.33	2.00	2.37	2.57	ns

Notes:

1. *Note that 3.3 V LVCMOS wide range is applicable to 100 µA drive strength only. The configuration will not operate at the equivalent software default drive strength. These values are for normal ranges only.*
2. *All LVCMOS 3.3 V software macros support LVCMOS 3.3 V wide range as specified in the JESD-8B specification.*
3. *For specific junction temperature and voltage supply levels, refer to Table 2-6 on page 2-6 for derating values.*

Table 2-26 **• Summary of I/O Timing Characteristics—Software Default Settings, STD Speed Grade Commercial-Case Conditions: T_J = 70°C, Worst-Case VCC = 1.14 V, Worst-Case VCCI = 3.0 V**

I/O Standard	Drive Strength	Equivalent Software Default Drive Strength Option[1]	Slew Rate	Capacitive Load (pF)	External Resistor (Ω)	t_{DOUT}	t_{DP}	t_{DIN}	t_{PY})	t_{PYS}	t_{EOUT}	t_{ZL}	t_{ZH}	t_{LZ}	t_{HZ}	Units
3.3 V LVTTL / 3.3 V LVCMOS	12 mA	12 mA	High	5 pF	–	0.98	2.31	0.19	0.99	1.37	0.67	2.34	1.86	2.65	3.38	ns
3.3 V LVCMOS Wide Range[2]	100 µA	12 mA	High	5 pF	–	0.98	3.21	0.19	1.32	1.92	0.67	3.21	2.52	3.73	4.73	ns
2.5 V LVCMOS	12 mA	12 mA	High	5 pF	–	0.98	2.29	0.19	1.19	1.40	0.67	2.32	1.94	2.65	3.27	ns
1.8 V LVCMOS	8 mA	8 mA	High	5 pF	–	0.98	2.45	0.19	1.12	1.61	0.67	2.48	2.16	2.71	3.16	ns
1.5 V LVCMOS	4 mA	4 mA	High	5 pF	–	0.98	2.71	0.19	1.26	1.80	0.67	2.75	2.39	2.78	3.15	ns
1.2 V LVCMOS	2 mA	2 mA	High	5 pF	–	0.98	3.38	0.19	1.57	2.34	0.67	3.26	2.78	2.99	3.24	ns
1.2 V LVCMOS Wide Range[3]	100 µA	2 mA	High	5 pF	–	0.98	3.38	0.19	1.57	2.34	0.67	3.26	2.78	2.99	3.24	ns

Notes:

1. *The minimum drive strength for any LVCMOS 3.3 V software configuration when run in wide range is ±100 µA. Drive strength displayed in the software is supported for normal range only. For a detailed I/V curve, refer to the IBIS models.*
2. *All LVCMOS 3.3 V software macros support LVCMOS 3.3 V wide range as specified in the JESD-8B specification.*
3. *All LVCMOS 1.2 V software macros support LVCMOS 1.2 V wide range as specified in the JESD8-12 specification.*
4. *For specific junction temperature and voltage supply levels, refer to Table 2-6 on page 2-6 for derating values.*

Detailed I/O DC Characteristics

***Table 2-27* • Input Capacitance**

Symbol	Definition	Conditions	Min.	Max.	Units
C_{IN}	Input capacitance	VIN = 0, f = 1.0 MHz		8	pF
C_{INCLK}	Input capacitance on the clock pin	VIN = 0, f = 1.0 MHz		8	pF

***Table 2-28* • I/O Output Buffer Maximum Resistances [1]**

Standard	Drive Strength	$R_{PULL\text{-}DOWN}$ (Ω) [2]	$R_{PULL\text{-}UP}$ (Ω) [3]
3.3 V LVTTL / 3.3V LVCMOS	2 mA	100	300
	4 mA	100	300
	6 mA	50	150
	8 mA	50	150
	12 mA	25	75
	16 mA	25	75
3.3 V LVCMOS Wide Range	100 µA	Same as equivalent software default drive	
2.5 V LVCMOS	2 mA	100	200
	4 mA	100	200
	6 mA	50	100
	8 mA	50	100
	12 mA	25	50
1.8 V LVCMOS	2 mA	200	225
	4 mA	100	112
	6 mA	50	56
	8 mA	50	56
1.5 V LVCMOS	2 mA	200	224
	4 mA	100	112
1.2 V LVCMOS	2 mA	157.5	163.8
1.2 V LVCMOS Wide Range[4]	100 µA	157.5	163.8

Notes:

1. *These maximum values are provided for informational reasons only. Minimum output buffer resistance values depend on VCC_I, drive strength selection, temperature, and process. For board design considerations and detailed output buffer resistances, use the corresponding IBIS model on the Microsemi SoC Products Group website at http://www.microsemi.com/soc/download/ibis/default.aspx.*
2. $R_{(PULL\text{-}DOWN\text{-}MAX)}$ = (VOLspec) / IOLspec
3. $R_{(PULL\text{-}UP\text{-}MAX)}$ = (VCCImax – VOHspec) / IOHspec
4. *Applicable to IGLOO PLUS V2 devices operating at VCCI ≥ VCC.*

***Table 2-29* • I/O Weak Pull-Up/Pull-Down Resistances**
Minimum and Maximum Weak Pull-Up/Pull-Down Resistance Values

	$R_{(WEAK\ PULL\text{-}UP)}$[1] (Ω)		$R_{(WEAK\ PULL\text{-}DOWN)}$[2] (Ω)	
VCCI	**Min.**	**Max.**	**Min.**	**Max.**
3.3 V	10 K	45 K	10 K	45 K
3.3 V (wide range I/Os)	10 K	45 K	10 K	45 K
2.5 V	11 K	55 K	12 K	74 K
1.8 V	18 K	70 K	17 K	110 K
1.5 V	19 K	90 K	19 K	140 K
1.2 V	25 K	110 K	25 K	150 K
1.2 V (wide range I/Os)	19 K	110 K	19 K	150 K

Notes:

1. $R_{(WEAK\ PULL\text{-}UP\text{-}MAX)} = (VCCImax – VOHspec) / I_{(WEAK\ PULL\text{-}UP\text{-}MIN)}$
2. $R_{(WEAK\ PULLDOWN\text{-}MAX)} = (VOLspec) / I_{(WEAK\ PULLDOWN\text{-}MIN)}$

***Table 2-30* • I/O Short Currents IOSH/IOSL**

	Drive Strength	**IOSL (mA)***	**IOSH (mA)***
3.3 V LVTTL / 3.3 V LVCMOS	2 mA	27	25
	4 mA	27	25
	6 mA	54	51
	8 mA	54	51
	12 mA	109	103
	16 mA	109	103
3.3 V LVCMOS Wide Range	100 µA	Same as equivalent software default drive	
2.5 V LVCMOS	2 mA	18	16
	4 mA	18	16
	6 mA	37	32
	8 mA	37	32
	12 mA	74	65
1.8 V LVCMOS	2 mA	11	9
	4 mA	22	17
	6 mA	44	35
	8 mA	44	35
1.5 V LVCMOS	2 mA	16	13
	4 mA	33	25
1.2 V LVCMOS	2 mA	26	20
1.2 V LVCMOS Wide Range	100 µA	26	20

*Note: *T_J = 100°C*

The length of time an I/O can withstand IOSH/IOSL events depends on the junction temperature. The reliability data below is based on a 3.3 V, 12 mA I/O setting, which is the worst case for this type of analysis.

For example, at 100°C, the short current condition would have to be sustained for more than six months to cause a reliability concern. The I/O design does not contain any short circuit protection, but such protection would only be needed in extremely prolonged stress conditions.

***Table 2-31* • Duration of Short Circuit Event before Failure**

Temperature	Time before Failure
–40°C	> 20 years
0°C	> 20 years
25°C	> 20 years
70°C	5 years
85°C	2 years
100°C	6 months

***Table 2-32* • Schmitt Trigger Input Hysteresis**
Hysteresis Voltage Value (Typ.) for Schmitt Mode Input Buffers

Input Buffer Configuration	Hysteresis Value (typ.)
3.3 V LVTTL/LVCMOS (Schmitt trigger mode)	240 mV
2.5 V LVCMOS (Schmitt trigger mode)	140 mV
1.8 V LVCMOS (Schmitt trigger mode)	80 mV
1.5 V LVCMOS (Schmitt trigger mode)	60 mV
1.2 V LVCMOS (Schmitt trigger mode)	40 mV

***Table 2-33* • I/O Input Rise Time, Fall Time, and Related I/O Reliability**

Input Buffer	Input Rise/Fall Time (min.)	Input Rise/Fall Time (max.)	Reliability
LVTTL/LVCMOS (Schmitt trigger disabled)	No requirement	10 ns *	20 years (100°C)
LVTTL/LVCMOS (Schmitt trigger enabled)	No requirement	No requirement, but input noise voltage cannot exceed Schmitt hysteresis.	20 years (100°C)

*Note: *The maximum input rise/fall time is related to the noise induced into the input buffer trace. If the noise is low, then the rise time and fall time of input buffers can be increased beyond the maximum value. The longer the rise/fall times, the more susceptible the input signal is to the board noise. Microsemi recommends signal integrity evaluation/characterization of the system to ensure that there is no excessive noise coupling into input signals.*

Single-Ended I/O Characteristics

3.3 V LVTTL / 3.3 V LVCMOS

Low-Voltage Transistor–Transistor Logic (LVTTL) is a general-purpose standard (EIA/JESD) for 3.3 V applications. It uses an LVTTL input buffer and push-pull output buffer.

***Table 2-34* • Minimum and Maximum DC Input and Output Levels**

3.3 V LVTTL / 3.3 V LVCMOS	VIL		VIH		VOL	VOH	IOL	IOH	IOSL	IOSH	IIL[1]	IIH[2]
Drive Strength	Min. V	Max. V	Min. V	Max. V	Max. V	Min. V	mA	mA	Max. mA[3]	Max. mA[3]	µA[4]	µA[4]
2 mA	–0.3	0.8	2	3.6	0.4	2.4	2	2	25	27	10	10
4 mA	–0.3	0.8	2	3.6	0.4	2.4	4	4	25	27	10	10
6 mA	–0.3	0.8	2	3.6	0.4	2.4	6	6	51	54	10	10
8 mA	–0.3	0.8	2	3.6	0.4	2.4	8	8	51	54	10	10
12 mA	–0.3	0.8	2	3.6	0.4	2.4	12	12	103	109	10	10
16 mA	–0.3	0.8	2	3.6	0.4	2.4	16	16	103	109	10	10

Notes:

1. *IIL is the input leakage current per I/O pin over recommended operation conditions where –0.3 V < VIN < VIL.*
2. *IIH is the input leakage current per I/O pin over recommended operating conditions VIH < VIN < VCCI. Input current is larger when operating outside recommended ranges.*
3. *Currents are measured at high temperature (100°C junction temperature) and maximum voltage.*
4. *Currents are measured at 85°C junction temperature.*
5. *Software default selection highlighted in gray.*

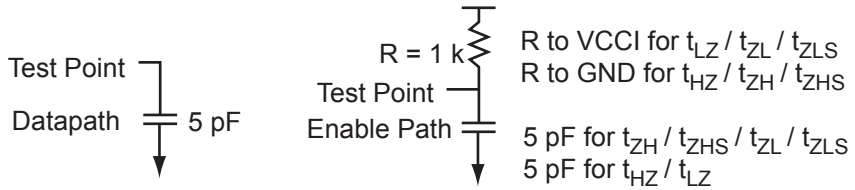

***Figure 2-7* • AC Loading**

***Table 2-35* • AC Waveforms, Measuring Points, and Capacitive Loads**

Input Low (V)	Input High (V)	Measuring Point* (V)	C_{LOAD} (pF)
0	3.3	1.4	5

*Note: *Measuring point = Vtrip. See Table 2-23 on page 2-20 for a complete table of trip points.*

Timing Characteristics

Applies to 1.5 V DC Core Voltage

Table 2-36 **• 3.3 V LVTTL / 3.3 V LVCMOS Low Slew – Applies to 1.5 V DC Core Voltage**
Commercial-Case Conditions: T_J = 70°C, Worst-Case VCC = 1.425 V, Worst-Case VCCI = 3.0 V

Drive Strength	Speed Grade	t_{DOUT}	t_{DP}	t_{DIN}	t_{PY}	t_{PYS}	t_{EOUT}	t_{ZL}	t_{ZH}	t_{LZ}	t_{HZ}	Units
2 mA	STD	0.97	3.94	0.18	0.85	1.15	0.66	4.02	3.46	1.82	1.87	ns
4 mA	STD	0.97	3.94	0.18	0.85	1.15	0.66	4.02	3.46	1.82	1.87	ns
6 mA	STD	0.97	3.20	0.18	0.85	1.15	0.66	3.27	2.94	2.04	2.27	ns
8 mA	STD	0.97	3.20	0.18	0.85	1.15	0.66	3.27	2.94	2.04	2.27	ns
12 mA	STD	0.97	2.72	0.18	0.85	1.15	0.66	2.78	2.57	2.20	2.53	ns
16 mA	STD	0.97	2.72	0.18	0.85	1.15	0.66	2.78	2.57	2.20	2.53	ns

Note: For specific junction temperature and voltage supply levels, refer to Table 2-6 on page 2-6 for derating values.

Table 2-37 **• 3.3 V LVTTL / 3.3 V LVCMOS High Slew – Applies to 1.5 V DC Core Voltage**
Commercial-Case Conditions: T_J = 70°C, Worst-Case VCC = 1.425 V, Worst-Case VCCI = 3.0 V

Drive Strength	Speed Grade	t_{DOUT}	t_{DP}	t_{DIN}	t_{PY}	t_{PYS}	t_{EOUT}	t_{ZL}	t_{ZH}	t_{LZ}	t_{HZ}	Units
2 mA	STD	0.97	2.36	0.18	0.85	1.15	0.66	2.41	1.90	1.82	1.98	ns
4 mA	STD	0.97	2.36	0.18	0.85	1.15	0.66	2.41	1.90	1.82	1.98	ns
6 mA	STD	0.97	1.96	0.18	0.85	1.15	0.66	2.01	1.56	2.04	2.38	ns
8 mA	STD	0.97	1.96	0.18	0.85	1.15	0.66	2.01	1.56	2.04	2.38	ns
12 mA	STD	0.97	1.76	0.18	0.85	1.15	0.66	1.80	1.39	2.20	2.64	ns
16 mA	STD	0.97	1.76	0.18	0.85	1.15	0.66	1.80	1.39	2.20	2.64	ns

Notes:

1. *For specific junction temperature and voltage supply levels, refer to Table 2-6 on page 2-6 for derating values.*
2. *Software default selection highlighted in gray.*

Applies to 1.2 V DC Core Voltage

Table 2-38 **• 3.3 V LVTTL / 3.3 V LVCMOS Low Slew – Applies to 1.2 V DC Core Voltage**
Commercial-Case Conditions: T_J = 70°C, Worst-Case VCC = 1.14 V, Worst-Case VCCI = 3.0 V

Drive Strength	Speed Grade	t_{DOUT}	t_{DP}	t_{DIN}	t_{PY}	t_{PYS}	t_{EOUT}	t_{ZL}	t_{ZH}	t_{LZ}	t_{HZ}	Units
2 mA	STD	0.98	4.56	0.19	0.99	1.37	0.67	4.63	3.98	2.26	2.57	ns
4 mA	STD	0.98	4.56	0.19	0.99	1.37	0.67	4.63	3.98	2.26	2.57	ns
6 mA	STD	0.98	3.80	0.19	0.99	1.37	0.67	3.96	3.45	2.49	2.98	ns
8 mA	STD	0.98	3.80	0.19	0.99	137	0.67	3.86	3.45	2.49	2.98	ns
12 mA	STD	0.98	3.31	0.19	0.99	1.37	0.67	3.36	3.07	2.65	3.25	ns
16 mA	STD	0.98	3.31	0.19	0.99	1.37	0.67	3.36	3.07	2.65	3.25	ns

Note: For specific junction temperature and voltage supply levels, refer to Table 2-6 on page 2-6 for derating values.

Table 2-39 **• 3.3 V LVTTL / 3.3 V LVCMOS High Slew – Applies to 1.2 V DC Core Voltage**
Commercial-Case Conditions: T_J = 70°C, Worst-Case VCC = 1.14 V, Worst-Case VCCI = 3.0 V

Drive Strength	Speed Grade	t_{DOUT}	t_{DP}	t_{DIN}	t_{PY}	t_{PYS}	t_{EOUT}	t_{ZL}	t_{ZH}	t_{LZ}	t_{HZ}	Units
2 mA	STD	0.98	2.92	0.19	0.99	1.37	0.67	2.97	2.38	2.25	2.70	ns
4 mA	STD	0.98	2.92	0.19	0.99	1.37	0.67	2.97	2.38	2.25	2.70	ns
6 mA	STD	0.98	2.52	0.19	0.99	1.37	0.67	2.56	2.03	2.49	3.11	ns
8 mA	STD	0.98	2.52	0.19	0.99	1.37	0.67	2.56	2.03	2.49	3.11	ns
12 mA	STD	0.98	2.31	0.19	0.99	1.37	0.67	2.34	1.86	2.65	3.38	ns
16 mA	STD	0.98	2.31	0.19	0.99	1.37	0.67	2.34	1.86	2.65	3.38	ns

Notes:

1. *For specific junction temperature and voltage supply levels, refer to Table 2-6 on page 2-6 for derating values.*
2. *Software default selection highlighted in gray*

3.3 V LVCMOS Wide Range

Table 2-40 **• Minimum and Maximum DC Input and Output Levels**

3.3 V LVCMOS Wide Range	Equivalent Software Default Drive Strength Option[1]	VIL		VIH		VOL	VOH	IOL	IOH	IOSL	IOSH	IIL[2]	IIH[3]
Drive Strength		Min. V	Max. V	Min. V	Max. V	Max. V	Min. V	µA	µA	Max. µA[4]	Max. µA[4]	µA[5]	µA[5]
100 µA	2 mA	–0.3	0.8	2	3.6	0.2	VDD – 0.2	100	100	25	27	10	10
100 µA	4 mA	–0.3	0.8	2	3.6	0.4	VDD – 0.2	100	100	25	27	10	10
100 µA	6 mA	–0.3	0.8	2	3.6	0.4	VDD – 0.2	100	100	51	54	10	10
100 µA	8 mA	–0.3	0.8	2	3.6	0.4	VDD – 0.2	100	100	51	54	10	10
100 µA	12 mA	–0.3	0.8	2	3.6	0.4	VDD – 0.2	100	100	103	109	10	10
100 µA	16 mA	–0.3	0.8	2	3.6	0.4	VDD – 0.2	100	100	103	109	10	10

Notes:

1. *The minimum drive strength for any LVCMOS 3.3 V software configuration when run in wide range is ±100 µA. Drive strength displayed in the software is supported for normal range only. For a detailed I/V curve, refer to the IBIS models.*
2. *IIL is the input leakage current per I/O pin over recommended operation conditions where –0.3 V < VIN < VIL.*
3. *IIH is the input leakage current per I/O pin over recommended operating conditions VIH < VIN < V CCI. Input current is larger when operating outside recommended ranges.*
4. *Currents are measured at high temperature (100°C junction temperature) and maximum voltage.*
5. *Currents are measured at 85°C junction temperature.*
6. *Software default selection highlighted in gray.*

Table 2-41 **• AC Waveforms, Measuring Points, and Capacitive Loads**

Input Low (V)	Input High (V)	Measuring Point* (V)	C_{LOAD} (pF)
0	3.3	1.4	5

*Note: *Measuring point = Vtrip. See Table 2-23 on page 2-20 for a complete table of trip points.*

Timing Characteristics

Applies to 1.5 V DC Core Voltage

Table 2-42 **• 3.3 V LVCMOS Wide Range Low Slew – Applies to 1.5 V DC Core Voltage**
Commercial-Case Conditions: T_J = 70°C, Worst-Case VCC = 1.425 V, Worst-Case VCCI = 2.7 V

Drive Strength	Equivalent Software Default Drive Strength Option[1]	Speed Grade	t_{DOUT}	t_{DP}	t_{DIN}	t_{PY}	t_{PYS}	t_{EOUT}	t_{ZL}	t_{ZH}	t_{LZ}	t_{HZ}	Units
100 µA	4 mA	STD	0.97	5.85	0.18	1.18	1.64	0.66	5.86	5.05	2.57	2.57	ns
100 µA	6 mA	STD	0.97	4.70	0.18	1.18	1.64	0.66	4.72	4.27	2.92	3.19	ns
100 µA	8 mA	STD	0.97	4.70	0.18	1.18	1.64	0.66	4.72	4.27	2.92	3.19	ns
100 µA	12 mA	STD	0.97	3.96	0.18	1.18	1.64	0.66	3.98	3.70	3.16	3.59	ns
100 µA	16 mA	STD	0.97	3.96	0.18	1.18	1.64	0.66	3.98	3.70	3.16	3.59	ns

Notes:

1. *The minimum drive strength for any LVCMOS 3.3 V software configuration when run in wide range is ±100 µA. Drive strength displayed in the software is supported for normal range only. For a detailed I/V curve, refer to the IBIS models.*
2. *For specific junction temperature and voltage supply levels, refer to Table 2-6 on page 2-6 for derating values.*

Table 2-43 **• 3.3 V LVCMOS Wide Range High Slew – Applies to 1.5 V DC Core Voltage**
Commercial-Case Conditions: T_J = 70°C, Worst-Case VCC = 1.425 V, Worst-Case VCCI = 2.7 V

Drive Strength	Equivalent Software Default Drive Strength Option[1]	Speed Grade	t_{DOUT}	t_{DP}	t_{DIN}	t_{PY}	t_{PYS}	t_{EOUT}	t_{ZL}	t_{ZH}	t_{LZ}	t_{HZ}	Units
100 µA	4 mA	STD	0.97	3.39	0.18	1.18	1.64	0.66	3.41	2.69	2.57	2.73	ns
100 µA	6 mA	STD	0.97	2.79	0.18	1.18	1.64	0.66	2.80	2.17	2.92	3.36	ns
100 µA	8 mA	STD	0.97	2.79	0.18	1.18	1.64	0.66	2.80	2.17	2.92	3.36	ns
100 µA	12 mA	STD	0.97	2.47	0.18	1.18	1.64	0.66	2.48	1.91	3.16	3.76	ns
100 µA	16 mA	STD	0.97	2.47	0.18	1.18	1.64	0.66	2.48	1.91	3.16	3.76	ns

Notes:

1. *The minimum drive strength for any LVCMOS 3.3 V software configuration when run in wide range is ±100 µA. Drive strength displayed in the software is supported for normal range only. For a detailed I/V curve, refer to the IBIS models.*
2. *For specific junction temperature and voltage supply levels, refer to Table 2-6 on page 2-6 for derating values.*
3. *Software default selection highlighted in gray.*

Applies to 1.2 V DC Core Voltage

***Table 2-44* • 3.3 V LVCMOS Wide Range Low Slew – Applies to 1.2 V DC Core Voltage**
Commercial-Case Conditions: T_J = 70°C, Worst-Case VCC = 1.425 V, Worst-Case VCCI = 2.7 V

Drive Strength	Equivalent Software Default Drive Strength Option[1]	Speed Grade	t_{DOUT}	t_{DP}	t_{DIN}	t_{PY}	t_{PYS}	t_{EOUT}	t_{ZL}	t_{ZH}	t_{LZ}	t_{HZ}	Units
100 µA	4 mA	STD	0.98	6.68	0.19	1.32	1.92	0.67	6.68	5.74	3.13	3.47	ns
100 µA	6 mA	STD	0.98	5.51	0.19	1.32	1.92	0.67	5.51	4.94	3.48	4.11	ns
100 µA	8 mA	STD	0.98	5.51	0.19	1.32	1.92	0.67	5.51	4.94	3.48	4.11	ns
100 µA	12 mA	STD	0.98	4.75	0.19	1.32	1.92	0.67	4.75	4.36	3.73	4.52	ns
100 µA	16 mA	STD	0.98	4.75	0.19	1.32	1.92	0.67	4.75	4.36	3.73	4.52	ns

Notes:

1. *The minimum drive strength for any LVCMOS 3.3 V software configuration when run in wide range is ±100 µA. Drive strength displayed in the software is supported for normal range only. For a detailed I/V curve, refer to the IBIS models.*
2. *For specific junction temperature and voltage supply levels, refer to Table 2-6 on page 2-6 for derating values.*

***Table 2-45* • 3.3 V LVCMOS Wide Range High Slew – Applies to 1.2 V DC Core Voltage**
Commercial-Case Conditions: T_J = 70°C, Worst-Case VCC = 1.425 V, Worst-Case VCCI = 2.7 V

Drive Strength	Equivalent Software Default Drive Strength Option[1]	Speed Grade	t_{DOUT}	t_{DP}	t_{DIN}	t_{PY}	t_{PYS}	t_{EOUT}	t_{ZL}	t_{ZH}	t_{LZ}	t_{HZ}	Units
100 µA	4 mA	STD	0.98	4.16	0.19	1.32	1.92	0.67	4.16	3.32	3.12	3.66	ns
100 µA	6 mA	STD	0.98	3.54	0.19	1.32	1.92	0.67	3.54	2.79	3.48	4.31	ns
100 µA	8 mA	STD	0.98	3.54	0.19	1.32	1.92	0.67	3.54	2.79	3.48	4.31	ns
100 µA	12 mA	STD	0.98	3.21	0.19	1.32	1.92	0.67	3.21	2.52	3.73	4.73	ns
100 µA	16 mA	STD	0.98	3.21	0.19	1.32	1.92	0.67	3.21	2.52	3.73	4.73	ns

Notes:

1. *The minimum drive strength for any LVCMOS 3.3 V software configuration when run in wide range is ±100 µA. Drive strength displayed in the software is supported for normal range only. For a detailed I/V curve, refer to the IBIS models.*
2. *For specific junction temperature and voltage supply levels, refer to Table 2-6 on page 2-6 for derating values.*
3. *Software default selection highlighted in gray.*

2.5 V LVCMOS

Low-Voltage CMOS for 2.5 V is an extension of the LVCMOS standard (JESD8-5) used for general-purpose 2.5 V applications.

***Table 2-46* • Minimum and Maximum DC Input and Output Levels**

2.5 V LVCMOS	VIL		VIH		VOL	VOH	IOL	IOH	IOSL	IOSH	IIL[1]	IIH[2]
Drive Strength	Min. V	Max. V	Min. V	Max. V	Max. V	Min. V	mA	mA	Max. mA[3]	Max. mA[3]	µA[4]	µA[4]
2 mA	–0.3	0.7	1.7	3.6	0.7	1.7	2	2	16	18	10	10
4 mA	–0.3	0.7	1.7	3.6	0.7	1.7	4	4	16	18	10	10
6 mA	–0.3	0.7	1.7	3.6	0.7	1.7	6	6	32	37	10	10
8 mA	–0.3	0.7	1.7	3.6	0.7	1.7	8	8	32	37	10	10
12 mA	–0.3	0.7	1.7	3.6	0.7	1.7	12	12	65	74	10	10

Notes:

1. *IIL is the input leakage current per I/O pin over recommended operation conditions where –0.3 V < VIN < VIL.*
2. *IIH is the input leakage current per I/O pin over recommended operating conditions VIH < VIN < VCCI. Input current is larger when operating outside recommended ranges.*
3. *Currents are measured at high temperature (100°C junction temperature) and maximum voltage.*
4. *Currents are measured at 85°C junction temperature.*
5. *Software default selection highlighted in gray.*

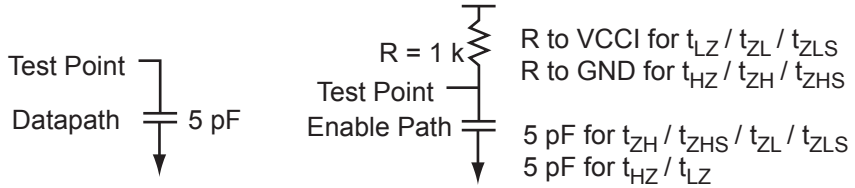

***Figure 2-8* • AC Loading**

***Table 2-47* • AC Waveforms, Measuring Points, and Capacitive Loads**

Input Low (V)	Input High (V)	Measuring Point* (V)	C_{LOAD} (pF)
0	2.5	1.2	5

*Note: *Measuring point = Vtrip. See Table 2-23 on page 2-20 for a complete table of trip points.*

Timing Characteristics

Applies to 1.5 V DC Core Voltage

Table 2-48 **• 2.5 V LVCMOS Low Slew – Applies to 1.5 V DC Core Voltage**
Commercial-Case Conditions: T_J = 70°C, Worst-Case VCC = 1.425 V, Worst-Case VCCI = 2.3 V

Drive Strength	Speed Grade	t_{DOUT}	t_{DP}	t_{DIN}	t_{PY}	t_{PYS}	t_{EOUT}	t_{ZL}	t_{ZH}	t_{LZ}	t_{HZ}	Units
4 mA	STD	0.97	4.44	0.18	1.06	1.22	0.66	4.53	4.15	1.80	1.70	ns
6 mA	STD	0.97	3.61	0.18	1.06	1.22	0.66	3.69	3.50	2.05	2.18	ns
8 mA	STD	0.97	3.61	0.18	1.06	1.22	0.66	3.69	3.50	2.05	2.18	ns
12 mA	STD	0.97	3.07	0.18	1.06	1.22	0.66	3.14	3.03	2.22	2.48	ns

Note: For specific junction temperature and voltage supply levels, refer to Table 2-6 on page 2-6 for derating values.

Table 2-49 **• 2.5 V LVCMOS High Slew – Applies to 1.5 V DC Core Voltage**
Commercial-Case Conditions: T_J = 70°C, Worst-Case VCC = 1.425 V, Worst-Case VCCI = 2.3 V

Drive Strength	Speed Grade	t_{DOUT}	t_{DP}	t_{DIN}	t_{PY}	t_{PYS}	t_{EOUT}	t_{ZL}	t_{ZH}	t_{LZ}	t_{HZ}	Units
4 mA	STD	0.97	2.41	0.18	1.06	1.22	0.66	2.47	2.22	1.79	1.77	ns
6 mA	STD	0.97	1.99	0.18	1.06	1.22	0.66	2.04	1.75	2.04	2.25	ns
8 mA	STD	0.97	1.99	0.18	1.06	1.22	0.66	2.04	1.75	2.04	2.25	ns
12 mA	STD	0.97	1.77	0.18	1.06	1.22	0.66	1.81	1.51	2.22	2.56	ns

Notes:

1. *For specific junction temperature and voltage supply levels, refer to Table 2-6 on page 2-6 for derating values.*
2. *Software default selection highlighted in gray.*

Applies to 1.2 V DC Core Voltage

Table 2-50 **• 2.5 LVCMOS Low Slew – Applies to 1.2 V DC Core Voltage**
Commercial-Case Conditions: T_J = 70°C, Worst-Case VCC = 1.14 V, Worst-Case VCC_I = 2.3 V

Drive Strength	Speed Grade	t_{DOUT}	t_{DP}	t_{DIN}	t_{PY}	t_{PYS}	t_{EOUT}	t_{ZL}	t_{ZH}	t_{LZ}	t_{HZ}	Units
4 mA	STD	0.98	5.04	0.19	1.19	1.40	0.67	5.12	4.65	2.22	2.36	ns
6 mA	STD	0.98	4.19	0.19	1.19	1.40	0.67	4.25	3.98	2.48	2.85	ns
8 mA	STD	0.98	4.19	0.19	1.19	1.40	0.67	4.25	3.98	2.48	2.85	ns
12 mA	STD	0.98	3.63	0.19	1.19	1.40	0.67	3.69	3.50	2.66	3.16	ns

Note: For specific junction temperature and voltage supply levels, refer to Table 2-6 on page 2-6 for derating values.

Table 2-51 **• 2.5 V LVCMOS High Slew – Applies to 1.2 V DC Core Voltage**
Commercial-Case Conditions: T_J = 70°C, Worst-Case VCC = 1.14 V, Worst-Case VCCI = 2.3 V

Drive Strength	Speed Grade	t_{DOUT}	t_{DP}	t_{DIN}	t_{PY}	t_{PYS}	t_{EOUT}	t_{ZL}	t_{ZH}	t_{LZ}	t_{HZ}	Units
4 mA	STD	0.98	2.96	0.19	1.19	1.40	0.67	3.00	2.67	2.22	2.46	ns
6 mA	STD	0.98	2.52	0.19	1.19	1.40	0.67	2.56	2.18	2.47	2.95	ns
8 mA	STD	0.98	2.52	0.19	1.19	1.40	0.67	2.56	2.18	2.47	2.95	ns
12 mA	STD	0.98	2.29	0.19	1.19	1.40	0.67	2.32	1.94	2.65	3.27	ns

Notes:

1. *For specific junction temperature and voltage supply levels, refer to Table 2-6 on page 2-6 for derating values.*
2. *Software default selection highlighted in gray.*

1.8 V LVCMOS

Low-voltage CMOS for 1.8 V is an extension of the LVCMOS standard (JESD8-5) used for general-purpose 1.8 V applications. It uses a 1.8 V input buffer and a push-pull output buffer.

***Table 2-52* • Minimum and Maximum DC Input and Output Levels**

1.8 V LVCMOS	VIL		VIH		VOL	VOH	IOL	IOH	IOSL	IOSH	IIL[1]	IIH[2]
Drive Strength	Min., V	Max., V	Min., V	Max., V	Max., V	Min., V	mA	mA	Max., mA[3]	Max., mA[3]	µA[4]	µA[4]
2 mA	–0.3	0.35 * VCCI	0.65 * VCCI	3.6	0.45	VCCI – 0.45	2	2	9	11	10	10
4 mA	–0.3	0.35 * VCCI	0.65 * VCCI	3.6	0.45	VCCI – 0.45	4	4	17	22	10	10
6 mA	–0.3	0.35 * VCCI	0.65 * VCCI	3.6	0.45	VCCI – 0.45	6	6	35	44	10	10
8 mA	–0.3	0.35 * VCCI	0.65 * VCCI	3.6	0.45	VCCI – 0.45	8	8	35	44	10	10

Notes:

1. *IIL is the input leakage current per I/O pin over recommended operation conditions where –0.3 V < VIN < VIL.*
2. *IIH is the input leakage current per I/O pin over recommended operating conditions VIH < VIN < VCCI. Input current is larger when operating outside recommended ranges.*
3. *Currents are measured at high temperature (100°C junction temperature) and maximum voltage.*
4. *Currents are measured at 85°C junction temperature.*
5. *Software default selection highlighted in gray.*

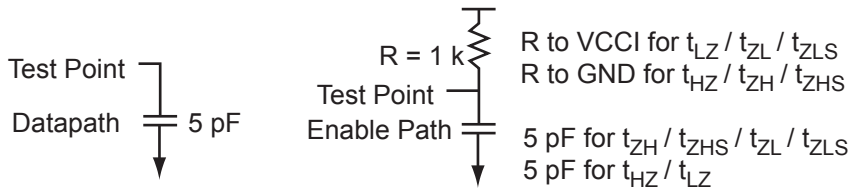

***Figure 2-9* • AC Loading**

***Table 2-53* • AC Waveforms, Measuring Points, and Capacitive Loads**

Input Low (V)	Input High (V)	Measuring Point* (V)	C_{LOAD} (pF)
0	1.8	0.9	5

*Note: *Measuring point = Vtrip. See Table 2-23 on page 2-20 for a complete table of trip points.*

Timing Characteristics

Applies to 1.5 V DC Core Voltage

Table 2-54 **• 1.8 V LVCMOS Low Slew – Applies to 1.5 V DC Core Voltage**
Commercial-Case Conditions: T_J = 70°C, Worst-Case VCC = 1.425 V, Worst-Case VCCI = 1.7 V

Drive Strength	Speed Grade	t_{DOUT}	t_{DP}	t_{DIN}	t_{PY}	t_{PYS}	t_{EOUT}	t_{ZL}	t_{ZH}	t_{LZ}	t_{HZ}	Units
2 mA	STD	0.97	5.89	0.18	1.00	1.43	0.66	6.01	5.43	1.78	1.30	ns
4 mA	STD	0.97	4.82	0.18	1.00	1.43	0.66	4.92	4.56	2.08	2.08	ns
6 mA	STD	0.97	4.13	0.18	1.00	1.43	0.66	4.21	3.96	2.30	2.46	ns
8 mA	STD	0.97	4.13	0.18	1.00	1.43	0.66	4.21	3.96	2.30	2.46	ns

Note: For specific junction temperature and voltage supply levels, refer to Table 2-6 on page 2-6 for derating values.

Table 2-55 **• 1.8 V LVCMOS High Slew – Applies to 1.5 V DC Core Voltage**
Commercial-Case Conditions: T_J = 70°C, Worst-Case VCC = 1.425 V, Worst-Case VCCI = 1.7 V

Drive Strength	Speed Grade	t_{DOUT}	t_{DP}	t_{DIN}	t_{PY}	t_{PYS}	t_{EOUT}	t_{ZL}	t_{ZH}	t_{LZ}	t_{HZ}	Units
2 mA	STD	0.97	2.82	0.18	1.00	1.43	0.66	2.88	2.78	1.78	1.35	ns
4 mA	STD	0.97	2.30	0.18	1.00	1.43	0.66	2.35	2.11	2.08	2.15	ns
6 mA	STD	0.97	2.00	0.18	1.00	1.43	0.66	2.04	1.76	2.29	2.55	ns
8 mA	STD	0.97	2.00	0.18	1.00	1.43	0.66	2.04	1.76	2.29	2.55	ns

Notes:

1. *For specific junction temperature and voltage supply levels, refer to Table 2-6 on page 2-6 for derating values.*
2. *Software default selection highlighted in gray.*

Applies to 1.2 V DC Core Voltage

Table 2-56 **• 1.8 V LVCMOS Low Slew – Applies to 1.2 V DC Core Voltage**
Commercial-Case Conditions: T_J = 70°C, Worst-Case VCC = 1.14 V, Worst-Case VCCI = 1.7 V

Drive Strength	Speed Grade	t_{DOUT}	t_{DP}	t_{DIN}	t_{PY}	t_{PYS}	t_{EOUT}	t_{ZL}	t_{ZH}	t_{LZ}	t_{HZ}	Units
2 mA	STD	0.98	6.43	0.19	1.12	1.61	0.67	6.54	5.93	2.19	1.88	ns
4 mA	STD	0.98	5.33	0.19	1.12	1.61	0.67	5.41	5.03	2.50	2.68	ns
6 mA	STD	0.98	4.61	0.19	1.12	1.61	0.67	4.69	4.41	2.72	3.07	ns
8 mA	STD	0.98	4.61	0.19	1.12	1.61	0.67	4.69	4.41	2.72	3.07	ns

Note: For specific junction temperature and voltage supply levels, refer to Table 2-6 on page 2-6 for derating values.

Table 2-57 **• 1.8 V LVCMOS High Slew – Applies to 1.2 V DC Core Voltage**
Commercial-Case Conditions: T_J = 70°C, Worst-Case VCC = 1.14 V, Worst-Case VCCI = 1.7 V

Drive Strength	Speed Grade	t_{DOUT}	t_{DP}	t_{DIN}	t_{PY}	t_{PYS}	t_{EOUT}	t_{ZL}	t_{ZH}	t_{LZ}	t_{HZ}	Units
2 mA	STD	0.98	3.30	0.19	1.12	1.61	0.67	3.34	3.21	2.19	1.93	ns
4 mA	STD	0.98	2.76	0.19	1.12	1.61	0.67	2.79	2.51	2.50	2.76	ns
6 mA	STD	0.98	2.45	0.19	1.12	1.61	0.67	2.48	2.16	2.71	3.16	ns
8 mA	STD	0.98	2.45	0.19	1.12	1.61	0.67	2.48	2.16	2.71	3.16	ns

Notes:

1. *For specific junction temperature and voltage supply levels, refer to Table 2-6 on page 2-6 for derating values.*
2. *Software default selection highlighted in gray.*

1.5 V LVCMOS (JESD8-11)

Low-Voltage CMOS for 1.5 V is an extension of the LVCMOS standard (JESD8-5) used for general-purpose 1.5 V applications. It uses a 1.5 V input buffer and a push-pull output buffer.

***Table 2-58* • Minimum and Maximum DC Input and Output Levels**

1.5 V LVCMOS	VIL		VIH		VOL	VOH	IOL	IOH	IOSL	IOSH	IIL[1]	IIH[2]
Drive Strength	Min. V	Max. V	Min. V	Max. V	Max. V	Min. V	mA	mA	Max. mA[3]	Max. mA[3]	µA[4]	µA[4]
2 mA	–0.3	0.35 * VCCI	0.7 * VCCI	3.6	0.25 * VCCI	0.75 * VCCI	2	2	13	16	10	10
4 mA	–0.3	0.35 * VCCI	0.7 * VCCI	3.6	0.25 * VCCI	0.75 * VCCI	4	4	25	33	10	10

Notes:

1. *IIL is the input leakage current per I/O pin over recommended operation conditions where –0.3 V < VIN < VIL.*
2. *IIH is the input leakage current per I/O pin over recommended operating conditions VIH < VIN < VCCI. Input current is larger when operating outside recommended ranges.*
3. *Currents are measured at high temperature (100°C junction temperature) and maximum voltage.*
4. *Currents are measured at 85°C junction temperature.*
5. *Software default selection highlighted in gray.*

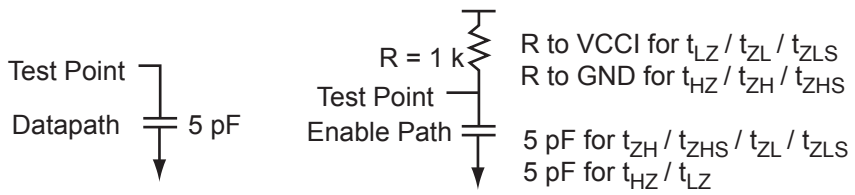

***Figure 2-10* • AC Loading**

***Table 2-59* • AC Waveforms, Measuring Points, and Capacitive Loads**

Input Low (V)	Input High (V)	Measuring Point* (V)	C_{LOAD} (pF)
0	1.5	0.75	5

*Note: *Measuring point = Vtrip. See Table 2-23 on page 2-20 for a complete table of trip points.*

Timing Characteristics

Applies to 1.5 V DC Core Voltage

Table 2-60 **• 1.5 V LVCMOS Low Slew – Applies to 1.5 V DC Core Voltage**
Commercial-Case Conditions: T_J = 70°C, Worst-Case VCC = 1.425 V, Worst-Case VCCI = 1.4 V

Drive Strength	Speed Grade	t_{DOUT}	t_{DP}	t_{DIN}	t_{PY}	t_{PYS}	t_{EOUT}	t_{ZL}	t_{ZH}	t_{LZ}	t_{HZ}	Units
2 mA	STD	0.97	6.07	0.18	1.16	1.62	0.66	6.19	5.53	2.13	2.02	ns
4 mA	STD	0.97	5.24	0.18	1.16	1.62	0.66	5.34	4.81	2.37	2.47	ns

Note: For specific junction temperature and voltage supply levels, refer to Table 2-6 on page 2-6 for derating values.

Table 2-61 **• 1.5 V LVCMOS High Slew – Applies to 1.5 V DC Core Voltage**
Commercial-Case Conditions: T_J = 70°C, Worst-Case VCC = 1.425 V, Worst-Case VCCI = 1.4 V

Drive Strength	Speed Grade	t_{DOUT}	t_{DP}	t_{DIN}	t_{PY}	t_{PYS}	t_{EOUT}	t_{ZL}	t_{ZH}	t_{LZ}	t_{HZ}	Units
2 mA	STD	0.97	2.65	0.18	1.16	1.62	0.66	2.71	2.43	2.13	2.11	ns
4 mA	STD	0.97	2.29	0.18	1.16	1.62	0.66	2.33	2.00	2.37	2.57	ns

Notes:

1. *For specific junction temperature and voltage supply levels, refer to Table 2-6 on page 2-6 for derating values.*
2. *Software default selection highlighted in gray.*

Applies to 1.2 V DC Core Voltage

Table 2-62 **• 1.5 V LVCMOS Low Slew – Applies to 1.2 V DC Core Voltage**
Commercial-Case Conditions: T_J = 70°C, Worst-Case VCC = 1.14 V, Worst-Case VCCI = 1.4 V

Drive Strength	Speed Grade	t_{DOUT}	t_{DP}	t_{DIN}	t_{PY}	t_{PYS}	t_{EOUT}	t_{ZL}	t_{ZH}	t_{LZ}	t_{HZ}	Units
2 mA	STD	0.98	6.57	0.19	1.26	1.80	0.67	6.68	6.01	2.54	2.59	ns
4 mA	STD	0.98	5.72	0.19	1.26	1.80	0.67	5.81	5.27	2.79	3.05	ns

Note: For specific junction temperature and voltage supply levels, refer to Table 2-6 on page 2-6 for derating values.

Table 2-63 **• 1.5 V LVCMOS High Slew – Applies to 1.2 V DC Core Voltage**
Commercial-Case Conditions: T_J = 70°C, Worst-Case VCC = 1.14 V, Worst-Case VCCI = 1.4 V

Drive Strength	Speed Grade	t_{DOUT}	t_{DP}	t_{DIN}	t_{PY}	t_{PYS}	t_{EOUT}	t_{ZL}	t_{ZH}	t_{LZ}	t_{HZ}	Units
2 mA	STD	0.98	3.08	0.19	1.26	1.80	0.67	3.13	2.82	2.53	2.68	ns
4 mA	STD	0.98	2.71	0.19	1.26	1.80	0.67	2.75	2.39	2.78	3.15	ns

Notes:

1. *For specific junction temperature and voltage supply levels, refer to Table 2-6 on page 2-6 for derating values.*
2. *Software default selection highlighted in gray.*

1.2 V LVCMOS (JESD8-12A)

Low-Voltage CMOS for 1.2 V complies with the LVCMOS standard JESD8-12A for general purpose 1.2 V applications. It uses a 1.2 V input buffer and a push-pull output buffer.

***Table 2-64* • Minimum and Maximum DC Input and Output Levels**

1.2 V LVCMOS[1]	VIL		VIH		VOL	VOH	IOL	IOH	IOSL	IOSH	IIL[2]	IIH[3]
Drive Strength	Min. V	Max. V	Min. V	Max. V	Max. V	Min. V	mA	mA	Max. mA[4]	Max. mA[4]	µA[5]	µA[5]
2 mA	–0.3	0.35 * VCCI	0.65 * VCCI	3.6	0.25 * VCCI	0.75 * VCCI	2	2	20	26	10	10

Notes:

1. *Applicable to IGLOO nano V2 devices operating at VCCI ≥ VCC.*
2. *IIL is the input leakage current per I/O pin over recommended operation conditions where –0.3 V < VIN < VIL.*
3. *IIH is the input leakage current per I/O pin over recommended operating conditions VIH < VIN < VCCI. Input current is larger when operating outside recommended ranges.*
4. *Currents are measured at high temperature (100°C junction temperature) and maximum voltage.*
5. *Currents are measured at 85°C junction temperature.*
6. *Software default selection highlighted in gray.*

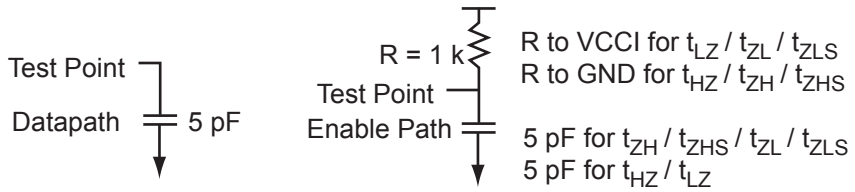

***Figure 2-11* • AC Loading**

***Table 2-65* • AC Waveforms, Measuring Points, and Capacitive Loads**

Input Low (V)	Input High (V)	Measuring Point* (V)	C_{LOAD} (pF)
0	1.2	0.6	5

*Note: *Measuring point = Vtrip. See Table 2-23 on page 2-20 for a complete table of trip points.*

Timing Characteristics

Applies to 1.2 V DC Core Voltage

***Table 2-66* • 1.2 V LVCMOS Low Slew**
Commercial-Case Conditions: T_J = 70°C, Worst-Case VCC = 1.14 V, Worst-Case VCCI = 1.14 V

Drive Strength	Speed Grade	t_{DOUT}	t_{DP}	t_{DIN}	t_{PY}	t_{PYS}	t_{EOUT}	t_{ZL}	t_{ZH}	t_{LZ}	t_{HZ}	Units
2 mA	STD	0.98	8.27	0.19	1.57	2.34	0.67	7.94	6.77	3.00	3.11	ns

Note: For specific junction temperature and voltage supply levels, refer to Table 2-6 on page 2-6 for derating values.

***Table 2-67* • 1.2 V LVCMOS High Slew**
Commercial-Case Conditions: T_J = 70°C, Worst-Case VCC = 1.14 V, Worst-Case VCCI = 1.14 V

Drive Strength	Speed Grade	t_{DOUT}	t_{DP}	t_{DIN}	t_{PY}	t_{PYS}	t_{EOUT}	t_{ZL}	t_{ZH}	t_{LZ}	t_{HZ}	Units
2 mA	STD	0.98	3.38	0.19	1.57	2.34	0.67	3.26	2.78	2.99	3.24	ns

Notes:

1. *For specific junction temperature and voltage supply levels, refer to Table 2-6 on page 2-6 for derating values.*
2. *Software default selection highlighted in gray.*

1.2 V LVCMOS Wide Range

Table 2-68 **• Minimum and Maximum DC Input and Output Levels**

1.2 V LVCMOS Wide Range[1]		VIL		VIH		VOL	VOH	IOL	IOH	IOSL	IOSH	IIL[3]	IIH[4]
Drive Strength	Equivalent Software Default Drive Strength Option[2]	Min. V	Max. V	Min. V	Max. V	Max. V	Min. V	mA	mA	Max. mA[5]	Max mA[5]	µA[6]	µA[6]
100 µA	2 mA	–0.3	0.35 * VCCI	0.65 * VCCI	3.6	0.25 * VCCI	0.75 * VCCI	2	2	20	26	10	10

Notes:

1. *Applicable to V2 devices only.*
2. *The minimum drive strength for any LVCMOS 1.2 V software configuration when run in wide range is ±100 µA. Drive strength displayed in the software is supported for normal range only. For a detailed I/V curve, refer to the IBIS models.*
3. *IIL is the input leakage current per I/O pin over recommended operation conditions where –0.3 V < VIN < VIL.*
4. *IIH is the input leakage current per I/O pin over recommended operating conditions VIH < VIN < VCCI. Input current is larger when operating outside recommended ranges.*
5. *Currents are measured at high temperature (100°C junction temperature) and maximum voltage.*
6. *Currents are measured at 85°C junction temperature.*
7. *Software default selection highlighted in gray.*

Table 2-69 **• AC Waveforms, Measuring Points, and Capacitive Loads**

Input Low (V)	Input High (V)	Measuring Point* (V)	C_{LOAD} (pF)
0	1.2	0.6	5

*Note: *Measuring point = Vtrip. See Table 2-23 on page 2-20 for a complete table of trip points.*

Timing Characteristics

Applies to 1.2 V DC Core Voltage

Table 2-70 **• 1.2 V LVCMOS Wide Range Low Slew – Applies to 1.2 V DC Core Voltage**
Commercial-Case Conditions: T_J = 70°C, Worst-Case VCC = 1.14 V, Worst-Case VCCI = 1.14 V

Drive Strength	Equivalent Software Default Drive Strength Option[1]	Speed Grade	t_{DOUT}	t_{DP}	t_{DIN}	t_{PY}	t_{PYS}	t_{EOUT}	t_{ZL}	t_{ZH}	t_{LZ}	t_{HZ}	Units
100 µA	2 mA	STD	0.98	8.27	0.19	1.57	2.34	0.67	7.94	6.77	3.00	3.11	ns

Notes:

1. *The minimum drive strength for any LVCMOS 1.2 V software configuration when run in wide range is ±100 µA. Drive strength displayed in the software is supported for normal range only. For a detailed I/V curve, refer to the IBIS models.*
2. *For specific junction temperature and voltage supply levels, refer to Table 2-6 on page 2-6 for derating values.*

Table 2-71 **• 1.2 V LVCMOS Wide Range High Slew – Applies to 1.2 V DC Core Voltage**
Commercial-Case Conditions: T_J = 70°C, Worst-Case VCC = 1.14 V, Worst-Case VCCI = 1.14 V

Drive Strength	Equivalent Software Default Drive Strength Option[1]	Speed Grade	t_{DOUT}	t_{DP}	t_{DIN}	t_{PY}	t_{PYS}	t_{EOUT}	t_{ZL}	t_{ZH}	t_{LZ}	t_{HZ}	Units
100 µA	2 mA	STD	0.98	3.38	0.19	1.57	2.34	0.67	3.26	2.78	2.99	3.24	ns

Notes:

1. *The minimum drive strength for any LVCMOS 1.2 V software configuration when run in wide range is ±100 µA. Drive strength displayed in the software is supported for normal range only. For a detailed I/V curve, refer to the IBIS models.*
2. *For specific junction temperature and voltage supply levels, refer to Table 2-6 on page 2-6 for derating values.*
3. *Software default selection highlighted in gray.*

I/O Register Specifications

Fully Registered I/O Buffers with Asynchronous Preset

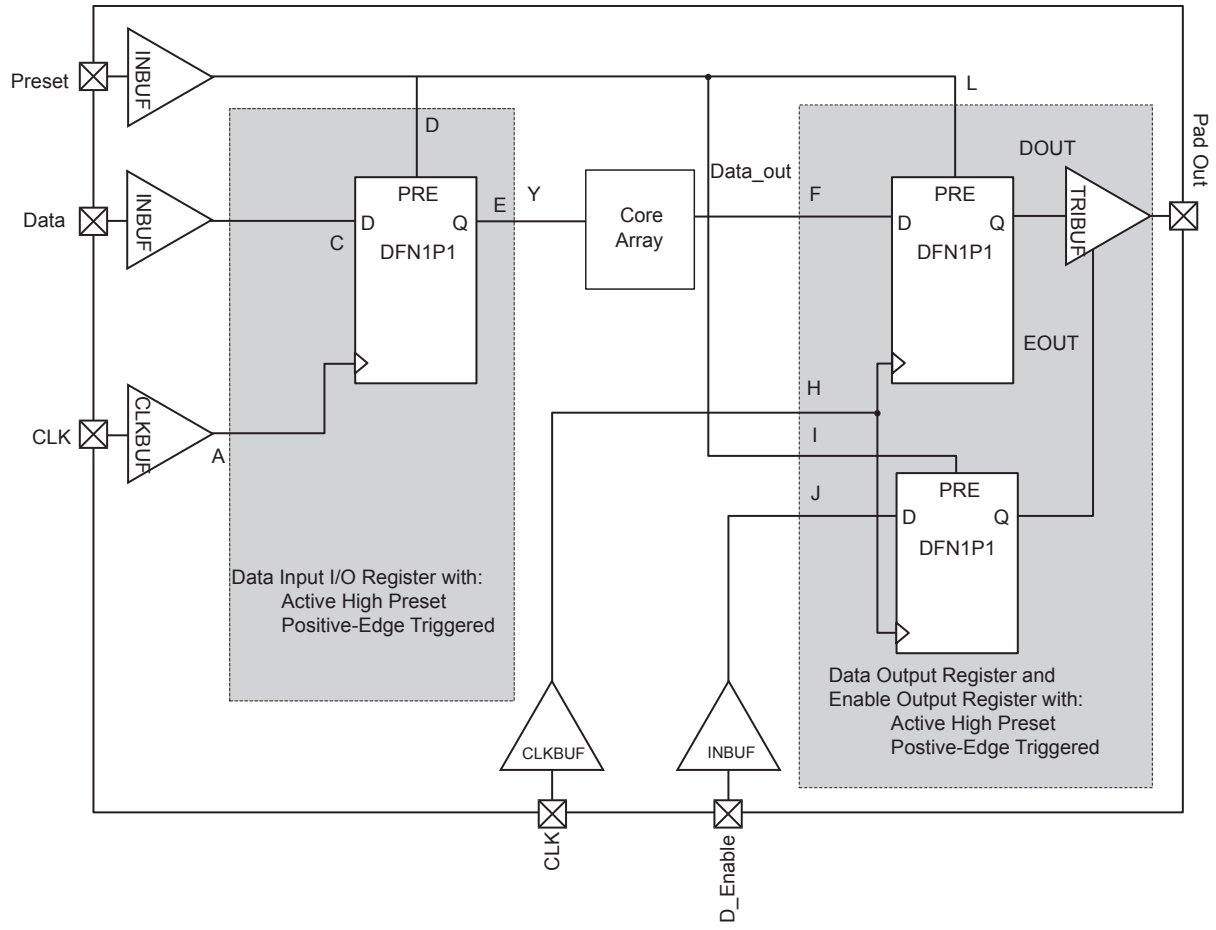

Figure 2-12 **• Timing Model of Registered I/O Buffers with Asynchronous Preset**

***Table 2-72* • Parameter Definition and Measuring Nodes**

Parameter Name	Parameter Definition	Measuring Nodes (from, to)*
t_{OCLKQ}	Clock-to-Q of the Output Data Register	H, DOUT
t_{OSUD}	Data Setup Time for the Output Data Register	F, H
t_{OHD}	Data Hold Time for the Output Data Register	F, H
t_{OPRE2Q}	Asynchronous Preset-to-Q of the Output Data Register	L, DOUT
$t_{OREMPRE}$	Asynchronous Preset Removal Time for the Output Data Register	L, H
$t_{ORECPRE}$	Asynchronous Preset Recovery Time for the Output Data Register	L, H
t_{OECLKQ}	Clock-to-Q of the Output Enable Register	H, EOUT
t_{OESUD}	Data Setup Time for the Output Enable Register	J, H
t_{OEHD}	Data Hold Time for the Output Enable Register	J, H
$t_{OEPRE2Q}$	Asynchronous Preset-to-Q of the Output Enable Register	I, EOUT
$t_{OEREMPRE}$	Asynchronous Preset Removal Time for the Output Enable Register	I, H
$t_{OERECPRE}$	Asynchronous Preset Recovery Time for the Output Enable Register	I, H
t_{ICLKQ}	Clock-to-Q of the Input Data Register	A, E
t_{ISUD}	Data Setup Time for the Input Data Register	C, A
t_{IHD}	Data Hold Time for the Input Data Register	C, A
t_{IPRE2Q}	Asynchronous Preset-to-Q of the Input Data Register	D, E
$t_{IREMPRE}$	Asynchronous Preset Removal Time for the Input Data Register	D, A
$t_{IRECPRE}$	Asynchronous Preset Recovery Time for the Input Data Register	D, A

*Note: *See Figure 2-12 on page 2-41 for more information.*

Fully Registered I/O Buffers with Asynchronous Clear

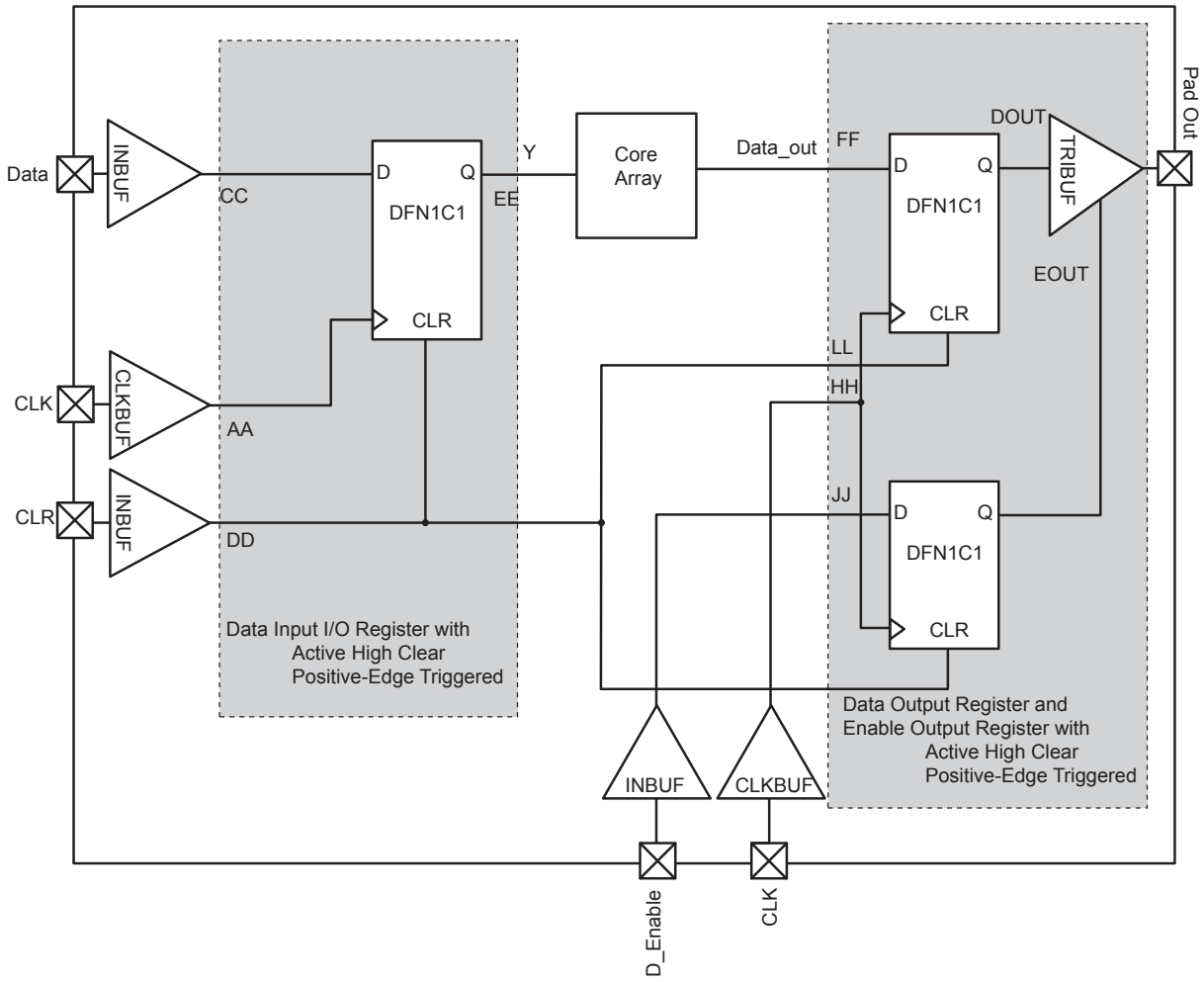

Figure 2-13 • **Timing Model of the Registered I/O Buffers with Asynchronous Clear**

***Table 2-73* • Parameter Definition and Measuring Nodes**

Parameter Name	Parameter Definition	Measuring Nodes (from, to)*
t_{OCLKQ}	Clock-to-Q of the Output Data Register	HH, DOUT
t_{OSUD}	Data Setup Time for the Output Data Register	FF, HH
t_{OHD}	Data Hold Time for the Output Data Register	FF, HH
t_{OCLR2Q}	Asynchronous Clear-to-Q of the Output Data Register	LL, DOUT
$t_{OREMCLR}$	Asynchronous Clear Removal Time for the Output Data Register	LL, HH
$t_{ORECCLR}$	Asynchronous Clear Recovery Time for the Output Data Register	LL, HH
t_{OECLKQ}	Clock-to-Q of the Output Enable Register	HH, EOUT
t_{OESUD}	Data Setup Time for the Output Enable Register	JJ, HH
t_{OEHD}	Data Hold Time for the Output Enable Register	JJ, HH
$t_{OECLR2Q}$	Asynchronous Clear-to-Q of the Output Enable Register	II, EOUT
$t_{OEREMCLR}$	Asynchronous Clear Removal Time for the Output Enable Register	II, HH
$t_{OERECCLR}$	Asynchronous Clear Recovery Time for the Output Enable Register	II, HH
t_{ICLKQ}	Clock-to-Q of the Input Data Register	AA, EE
t_{ISUD}	Data Setup Time for the Input Data Register	CC, AA
t_{IHD}	Data Hold Time for the Input Data Register	CC, AA
t_{ICLR2Q}	Asynchronous Clear-to-Q of the Input Data Register	DD, EE
$t_{IREMCLR}$	Asynchronous Clear Removal Time for the Input Data Register	DD, AA
$t_{IRECCLR}$	Asynchronous Clear Recovery Time for the Input Data Register	DD, AA

*Note: *See Figure 2-13 on page 2-43 for more information.*

Input Register

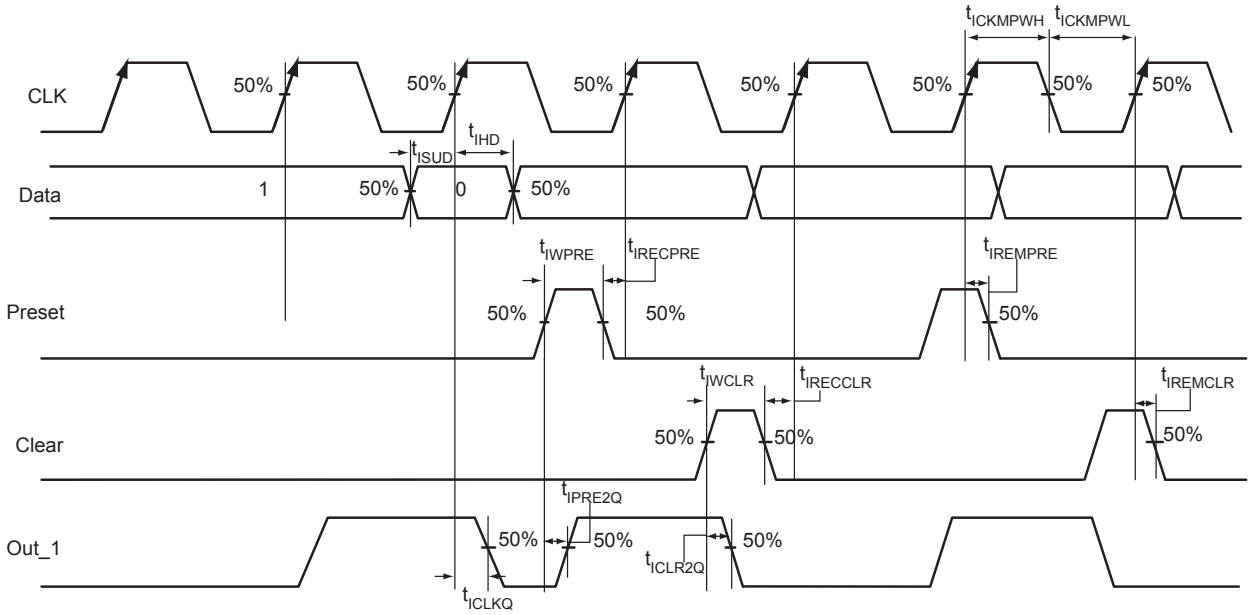

Figure 2-14 **• Input Register Timing Diagram**

Timing Characteristics

1.5 V DC Core Voltage

Table 2-74 **• Input Data Register Propagation Delays**
Commercial-Case Conditions: T_J = 70°C, Worst-Case VCC = 1.425 V

Parameter	Description	Std.	Units
t_{ICLKQ}	Clock-to-Q of the Input Data Register	0.41	ns
t_{ISUD}	Data Setup Time for the Input Data Register	0.32	ns
t_{IHD}	Data Hold Time for the Input Data Register	0.00	ns
t_{ICLR2Q}	Asynchronous Clear-to-Q of the Input Data Register	0.57	ns
t_{IPRE2Q}	Asynchronous Preset-to-Q of the Input Data Register	0.57	ns
$t_{IREMCLR}$	Asynchronous Clear Removal Time for the Input Data Register	0.00	ns
$t_{IRECCLR}$	Asynchronous Clear Recovery Time for the Input Data Register	0.24	ns
$t_{IREMPRE}$	Asynchronous Preset Removal Time for the Input Data Register	0.00	ns
$t_{IRECPRE}$	Asynchronous Preset Recovery Time for the Input Data Register	0.24	ns
t_{IWCLR}	Asynchronous Clear Minimum Pulse Width for the Input Data Register	0.19	ns
t_{IWPRE}	Asynchronous Preset Minimum Pulse Width for the Input Data Register	0.19	ns
$t_{ICKMPWH}$	Clock Minimum Pulse Width High for the Input Data Register	0.31	ns
$t_{ICKMPWL}$	Clock Minimum Pulse Width Low for the Input Data Register	0.28	ns

Note: For specific junction temperature and voltage supply levels, refer to Table 2-6 on page 2-6 for derating values.

1.2 V DC Core Voltage

Table 2-75 • Input Data Register Propagation Delays
Commercial-Case Conditions: T_J = 70°C, Worst-Case VCC = 1.14 V

Parameter	Description	Std.	Units
t_{ICLKQ}	Clock-to-Q of the Input Data Register	0.66	ns
t_{ISUD}	Data Setup Time for the Input Data Register	0.43	ns
t_{IHD}	Data Hold Time for the Input Data Register	0.00	ns
t_{ICLR2Q}	Asynchronous Clear-to-Q of the Input Data Register	0.86	ns
t_{IPRE2Q}	Asynchronous Preset-to-Q of the Input Data Register	0.86	ns
$t_{IREMCLR}$	Asynchronous Clear Removal Time for the Input Data Register	0.00	ns
$t_{IRECCLR}$	Asynchronous Clear Recovery Time for the Input Data Register	0.24	ns
$t_{IREMPRE}$	Asynchronous Preset Removal Time for the Input Data Register	0.00	ns
$t_{IRECPRE}$	Asynchronous Preset Recovery Time for the Input Data Register	0.24	ns
t_{IWCLR}	Asynchronous Clear Minimum Pulse Width for the Input Data Register	0.19	ns
t_{IWPRE}	Asynchronous Preset Minimum Pulse Width for the Input Data Register	0.19	ns
$t_{ICKMPWH}$	Clock Minimum Pulse Width High for the Input Data Register	0.31	ns
$t_{ICKMPWL}$	Clock Minimum Pulse Width Low for the Input Data Register	0.28	ns

Note: For specific junction temperature and voltage supply levels, refer to Table 2-7 on page 2-6 for derating values.

Output Register

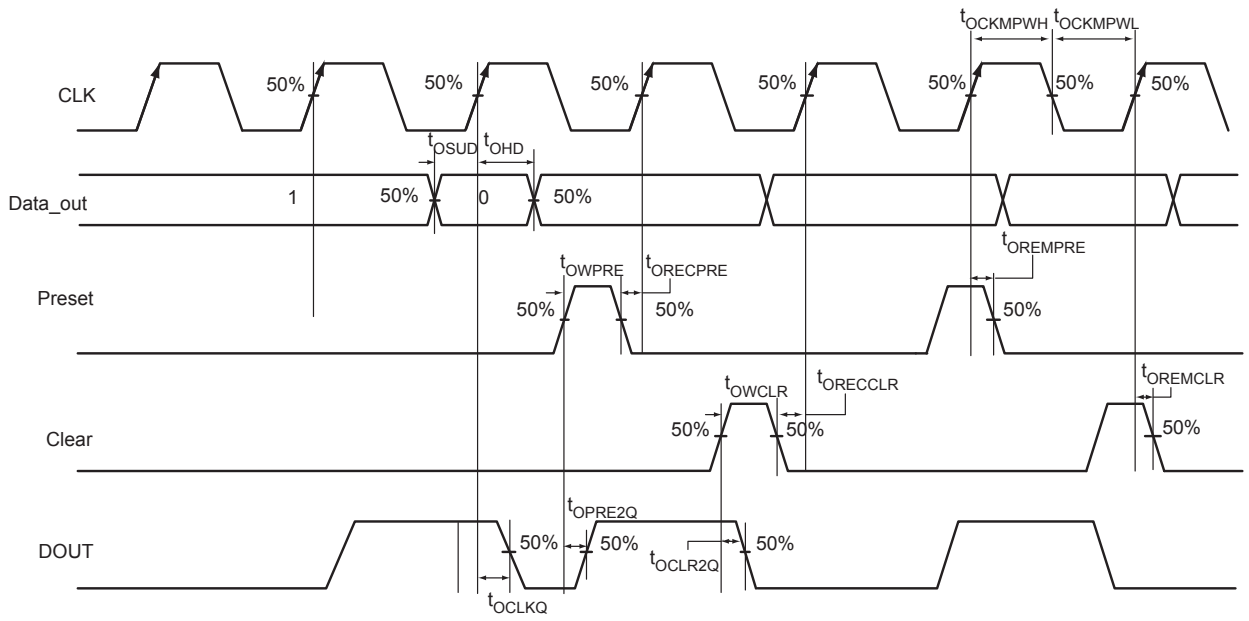

Figure 2-15 **• Output Register Timing Diagram**

Timing Characteristics

1.5 V DC Core Voltage

Table 2-76 **• Output Data Register Propagation Delays**
Commercial-Case Conditions: T_J = 70°C, Worst-Case VCC = 1.425 V

Parameter	Description	Std.	Units
t_{OCLKQ}	Clock-to-Q of the Output Data Register	0.66	ns
t_{OSUD}	Data Setup Time for the Output Data Register	0.33	ns
t_{OHD}	Data Hold Time for the Output Data Register	0.00	ns
t_{OCLR2Q}	Asynchronous Clear-to-Q of the Output Data Register	0.82	ns
t_{OPRE2Q}	Asynchronous Preset-to-Q of the Output Data Register	0.88	ns
$t_{OREMCLR}$	Asynchronous Clear Removal Time for the Output Data Register	0.00	ns
$t_{ORECCLR}$	Asynchronous Clear Recovery Time for the Output Data Register	0.24	ns
$t_{OREMPRE}$	Asynchronous Preset Removal Time for the Output Data Register	0.00	ns
$t_{ORECPRE}$	Asynchronous Preset Recovery Time for the Output Data Register	0.24	ns
t_{OWCLR}	Asynchronous Clear Minimum Pulse Width for the Output Data Register	0.19	ns
t_{OWPRE}	Asynchronous Preset Minimum Pulse Width for the Output Data Register	0.19	ns
$t_{OCKMPWH}$	Clock Minimum Pulse Width High for the Output Data Register	0.31	ns
$t_{OCKMPWL}$	Clock Minimum Pulse Width Low for the Output Data Register	0.28	ns

Note: For specific junction temperature and voltage supply levels, refer to Table 2-6 on page 2-6 for derating values.

1.2 V DC Core Voltage

Table 2-77 • Output Data Register Propagation Delays
Commercial-Case Conditions: T_J = 70°C, Worst-Case VCC = 1.14 V

Parameter	Description	Std.	Units
t_{OCLKQ}	Clock-to-Q of the Output Data Register	1.03	ns
t_{OSUD}	Data Setup Time for the Output Data Register	0.52	ns
t_{OHD}	Data Hold Time for the Output Data Register	0.00	ns
t_{OCLR2Q}	Asynchronous Clear-to-Q of the Output Data Register	1.22	ns
t_{OPRE2Q}	Asynchronous Preset-to-Q of the Output Data Register	1.31	ns
$t_{OREMCLR}$	Asynchronous Clear Removal Time for the Output Data Register	0.00	ns
$t_{ORECCLR}$	Asynchronous Clear Recovery Time for the Output Data Register	0.24	ns
$t_{OREMPRE}$	Asynchronous Preset Removal Time for the Output Data Register	0.00	ns
$t_{ORECPRE}$	Asynchronous Preset Recovery Time for the Output Data Register	0.24	ns
t_{OWCLR}	Asynchronous Clear Minimum Pulse Width for the Output Data Register	0.19	ns
t_{OWPRE}	Asynchronous Preset Minimum Pulse Width for the Output Data Register	0.19	ns
$t_{OCKMPWH}$	Clock Minimum Pulse Width High for the Output Data Register	0.31	ns
$t_{OCKMPWL}$	Clock Minimum Pulse Width Low for the Output Data Register	0.28	ns

Note: For specific junction temperature and voltage supply levels, refer to Table 2-7 on page 2-6 for derating values.

Output Enable Register

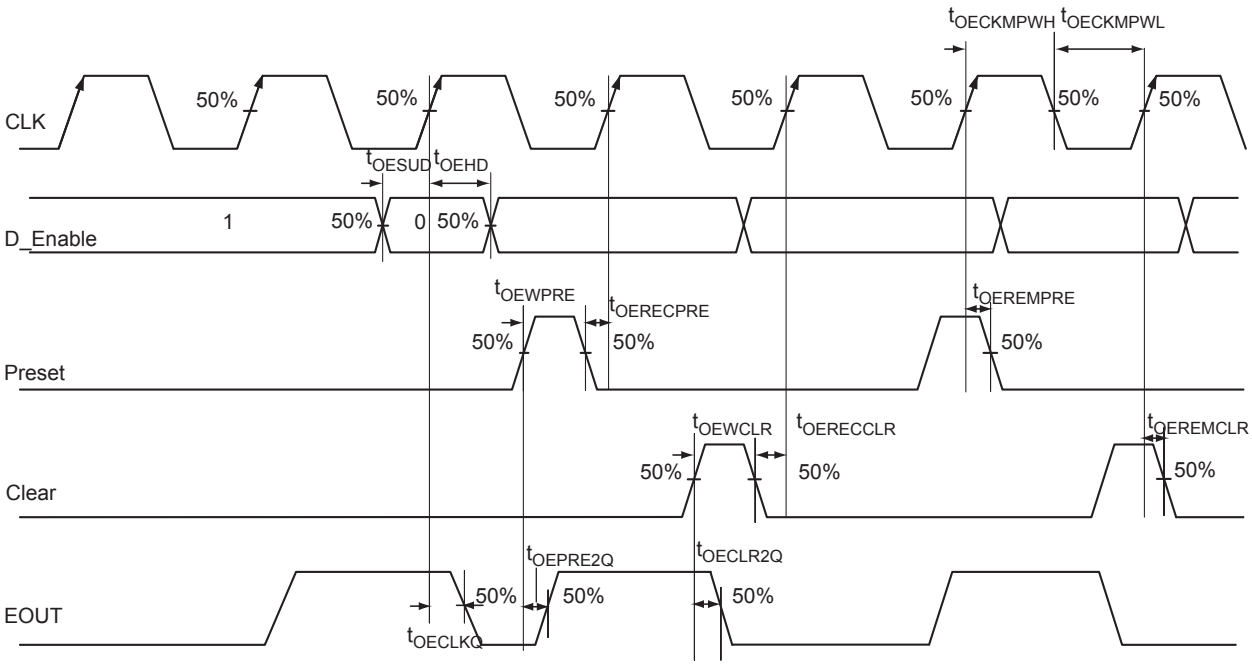

Figure 2-16 **• Output Enable Register Timing Diagram**

Timing Characteristics

1.5 V DC Core Voltage

Table 2-78 **• Output Enable Register Propagation Delays**
Commercial-Case Conditions: T_J = 70°C, Worst-Case VCC = 1.425 V

Parameter	Description	Std.	Units
t_{OECLKQ}	Clock-to-Q of the Output Enable Register	0.68	ns
t_{OESUD}	Data Setup Time for the Output Enable Register	0.33	ns
t_{OEHD}	Data Hold Time for the Output Enable Register	0.00	ns
$t_{OECLR2Q}$	Asynchronous Clear-to-Q of the Output Enable Register	0.84	ns
$t_{OEPRE2Q}$	Asynchronous Preset-to-Q of the Output Enable Register	0.91	ns
$t_{OEREMCLR}$	Asynchronous Clear Removal Time for the Output Enable Register	0.00	ns
$t_{OERECCLR}$	Asynchronous Clear Recovery Time for the Output Enable Register	0.24	ns
$t_{OEREMPRE}$	Asynchronous Preset Removal Time for the Output Enable Register	0.00	ns
$t_{OERECPRE}$	Asynchronous Preset Recovery Time for the Output Enable Register	0.24	ns
t_{OEWCLR}	Asynchronous Clear Minimum Pulse Width for the Output Enable Register	0.19	ns
t_{OEWPRE}	Asynchronous Preset Minimum Pulse Width for the Output Enable Register	0.19	ns
$t_{OECKMPWH}$	Clock Minimum Pulse Width High for the Output Enable Register	0.31	ns
$t_{OECKMPWL}$	Clock Minimum Pulse Width Low for the Output Enable Register	0.28	ns

Note: For specific junction temperature and voltage supply levels, refer to Table 2-6 on page 2-6 for derating values.

1.2 V DC Core Voltage

Table 2-79 • Output Enable Register Propagation Delays
Commercial-Case Conditions: T_J = 70°C, Worst-Case VCC = 1.14 V

Parameter	Description	Std.	Units
t_{OECLKQ}	Clock-to-Q of the Output Enable Register	1.06	ns
t_{OESUD}	Data Setup Time for the Output Enable Register	0.52	ns
t_{OEHD}	Data Hold Time for the Output Enable Register	0.00	ns
$t_{OECLR2Q}$	Asynchronous Clear-to-Q of the Output Enable Register	1.25	ns
$t_{OEPRE2Q}$	Asynchronous Preset-to-Q of the Output Enable Register	1.36	ns
$t_{OEREMCLR}$	Asynchronous Clear Removal Time for the Output Enable Register	0.00	ns
$t_{OERECCLR}$	Asynchronous Clear Recovery Time for the Output Enable Register	0.24	ns
$t_{OEREMPRE}$	Asynchronous Preset Removal Time for the Output Enable Register	0.00	ns
$t_{OERECPRE}$	Asynchronous Preset Recovery Time for the Output Enable Register	0.24	ns
t_{OEWCLR}	Asynchronous Clear Minimum Pulse Width for the Output Enable Register	0.19	ns
t_{OEWPRE}	Asynchronous Preset Minimum Pulse Width for the Output Enable Register	0.19	ns
$t_{OECKMPWH}$	Clock Minimum Pulse Width High for the Output Enable Register	0.31	ns
$t_{OECKMPWL}$	Clock Minimum Pulse Width Low for the Output Enable Register	0.28	ns

Note: For specific junction temperature and voltage supply levels, refer to Table 2-7 on page 2-6 for derating values.

VersaTile Characteristics

VersaTile Specifications as a Combinatorial Module

The IGLOO PLUS library offers all combinations of LUT-3 combinatorial functions. In this section, timing characteristics are presented for a sample of the library. For more details, refer to the *Fusion, IGLOO/e, and ProASIC3/ E Macro Library Guide*.

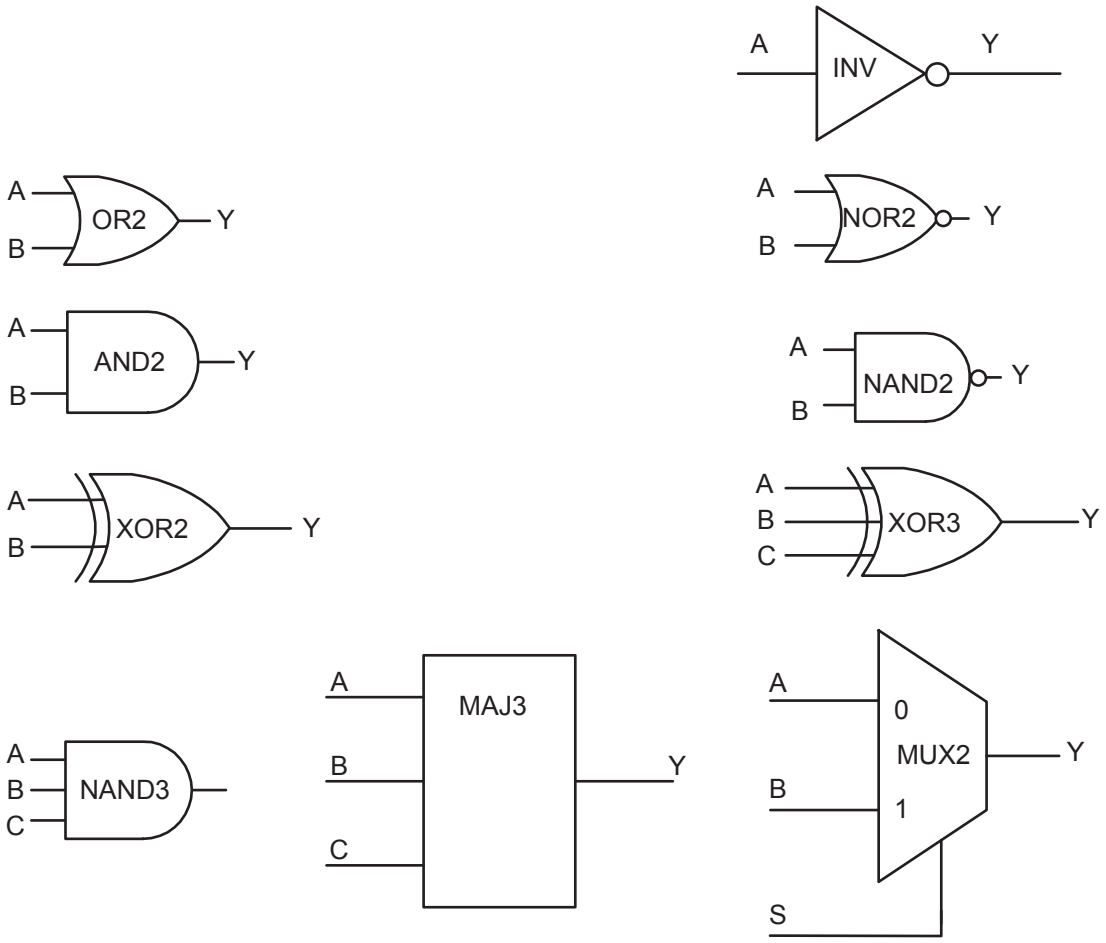

Figure 2-17 **• Sample of Combinatorial Cells**

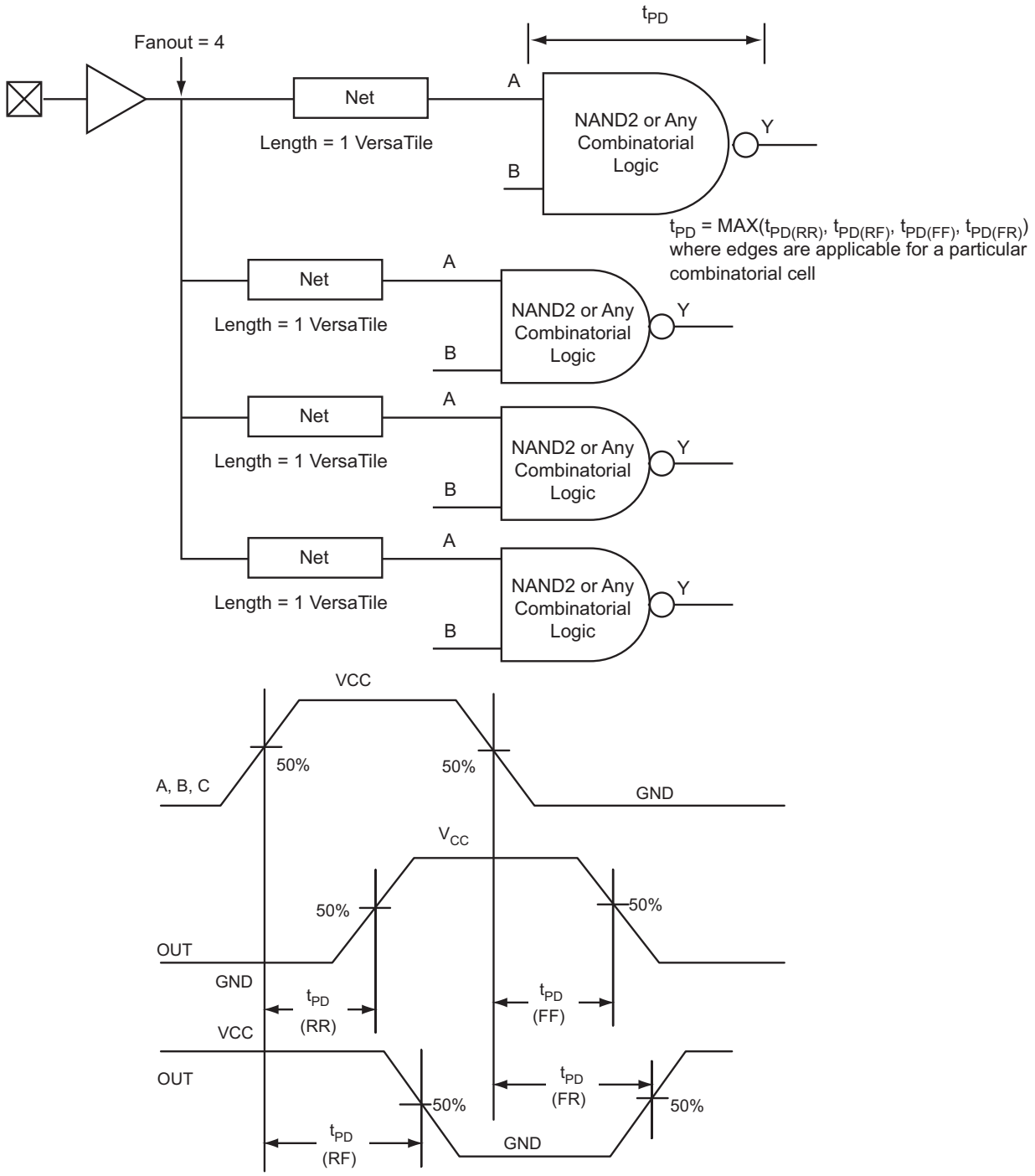

***Figure 2-18* • Timing Model and Waveforms**

Timing Characteristics

1.5 V DC Core Voltage

***Table 2-80* • Combinatorial Cell Propagation Delays**
Commercial-Case Conditions: T_J = 70°C, Worst-Case VCC = 1.425 V

Combinatorial Cell	Equation	Parameter	Std.	Units
INV	Y = !A	t_{PD}	0.72	ns
AND2	Y = A · B	t_{PD}	0.86	ns
NAND2	Y = !(A · B)	t_{PD}	1.00	ns
OR2	Y = A + B	t_{PD}	1.26	ns
NOR2	Y = !(A + B)	t_{PD}	1.16	ns
XOR2	Y = A ⊕ B	t_{PD}	1.46	ns
MAJ3	Y = MAJ(A, B, C)	t_{PD}	1.47	ns
XOR3	Y = A ⊕ B ⊕ C	t_{PD}	2.12	ns
MUX2	Y = A !S + B S	t_{PD}	1.24	ns
AND3	Y = A · B · C	t_{PD}	1.40	ns

Note: For specific junction temperature and voltage supply levels, refer to Table 2-6 on page 2-6 for derating values.

1.2 V DC Core Voltage

***Table 2-81* • Combinatorial Cell Propagation Delays**
Commercial-Case Conditions: T_J = 70°C, Worst-Case VCC = 1.14 V

Combinatorial Cell	Equation	Parameter	Std.	Units
INV	Y = !A	t_{PD}	1.26	ns
AND2	Y = A · B	t_{PD}	1.46	ns
NAND2	Y = !(A · B)	t_{PD}	1.78	ns
OR2	Y = A + B	t_{PD}	2.47	ns
NOR2	Y = !(A + B)	t_{PD}	2.17	ns
XOR2	Y = A ⊕ B	t_{PD}	2.62	ns
MAJ3	Y = MAJ(A, B, C)	t_{PD}	2.66	ns
XOR3	Y = A ⊕ B ⊕ C	t_{PD}	3.77	ns
MUX2	Y = A !S + B S	t_{PD}	2.20	ns
AND3	Y = A · B · C	t_{PD}	2.49	ns

Note: For specific junction temperature and voltage supply levels, refer to Table 2-7 on page 2-6 for derating values.

VersaTile Specifications as a Sequential Module

The IGLOO PLUS library offers a wide variety of sequential cells, including flip-flops and latches. Each has a data input and optional enable, clear, or preset. In this section, timing characteristics are presented for a representative sample from the library. For more details, refer to the *Fusion, IGLOO/e, and ProASIC3/E Macro Library Guide*.

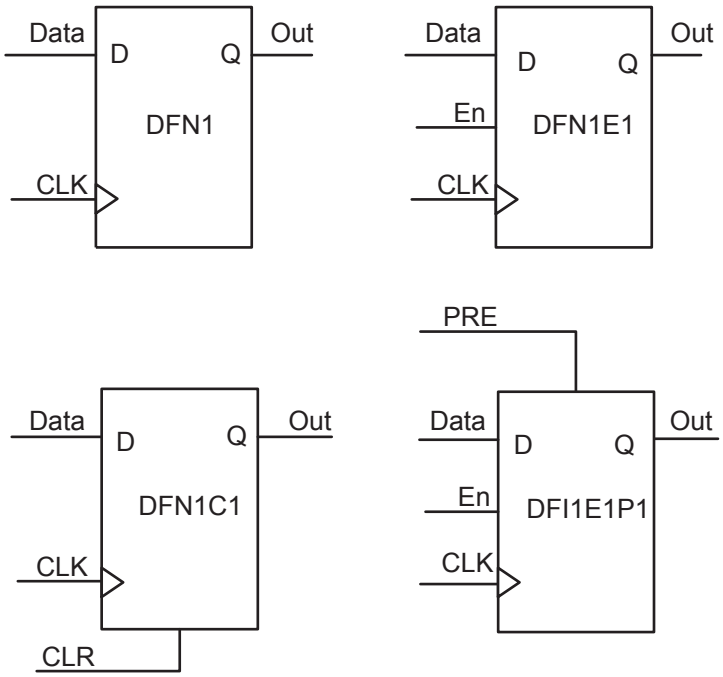

***Figure 2-19* • Sample of Sequential Cells**

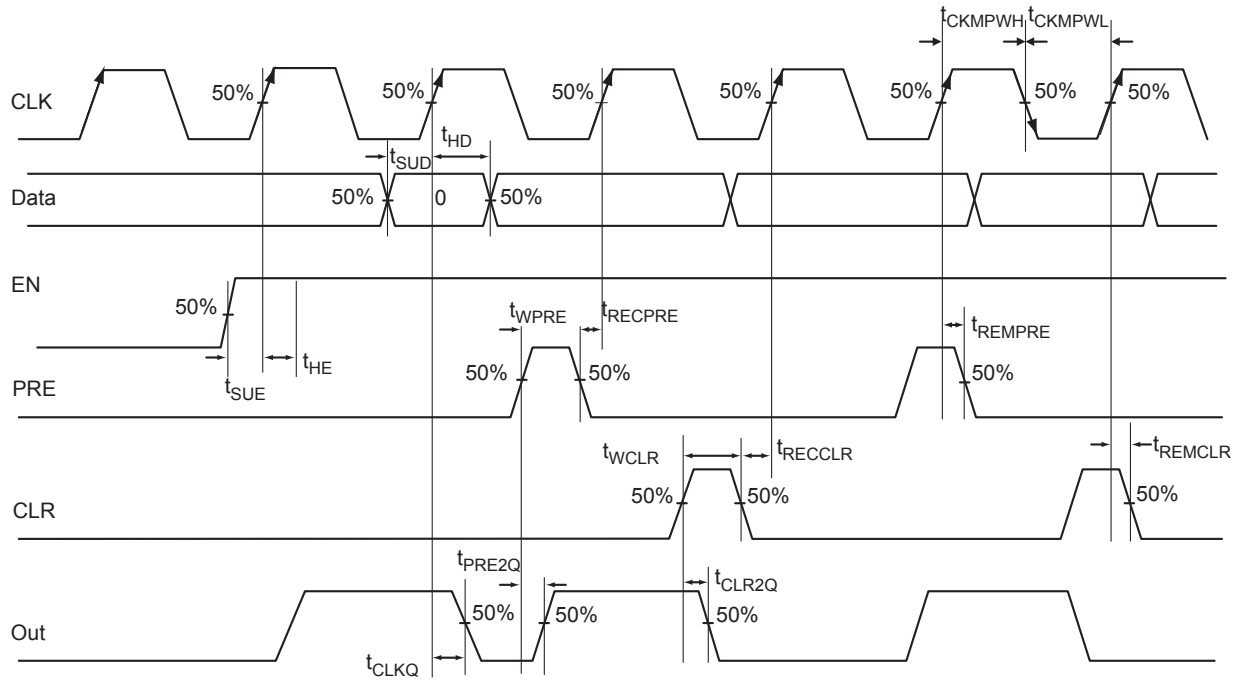

Figure 2-20 **• Timing Model and Waveforms**

Timing Characteristics

1.5 V DC Core Voltage

Table 2-82 **• Register Delays**
Commercial-Case Conditions: T_J = 70°C, Worst-Case VCC = 1.425 V

Parameter	Description	Std.	Units
t_{CLKQ}	Clock-to-Q of the Core Register	0.89	ns
t_{SUD}	Data Setup Time for the Core Register	0.81	ns
t_{HD}	Data Hold Time for the Core Register	0.00	ns
t_{SUE}	Enable Setup Time for the Core Register	0.73	ns
t_{HE}	Enable Hold Time for the Core Register	0.00	ns
t_{CLR2Q}	Asynchronous Clear-to-Q of the Core Register	0.60	ns
t_{PRE2Q}	Asynchronous Preset-to-Q of the Core Register	0.62	ns
t_{REMCLR}	Asynchronous Clear Removal Time for the Core Register	0.00	ns
t_{RECCLR}	Asynchronous Clear Recovery Time for the Core Register	0.24	ns
t_{REMPRE}	Asynchronous Preset Removal Time for the Core Register	0.00	ns
t_{RECPRE}	Asynchronous Preset Recovery Time for the Core Register	0.23	ns
t_{WCLR}	Asynchronous Clear Minimum Pulse Width for the Core Register	0.30	ns
t_{WPRE}	Asynchronous Preset Minimum Pulse Width for the Core Register	0.30	ns
t_{CKMPWH}	Clock Minimum Pulse Width High for the Core Register	0.56	ns
t_{CKMPWL}	Clock Minimum Pulse Width Low for the Core Register	0.56	ns

Note: For specific junction temperature and voltage supply levels, refer to Table 2-6 on page 2-6 for derating values.

1.2 V DC Core Voltage

***Table 2-83* • Register Delays**
Commercial-Case Conditions: T_J = 70°C, Worst-Case VCC = 1.14 V

Parameter	Description	Std.	Units
t_{CLKQ}	Clock-to-Q of the Core Register	1.61	ns
t_{SUD}	Data Setup Time for the Core Register	1.17	ns
t_{HD}	Data Hold Time for the Core Register	0.00	ns
t_{SUE}	Enable Setup Time for the Core Register	1.29	ns
t_{HE}	Enable Hold Time for the Core Register	0.00	ns
t_{CLR2Q}	Asynchronous Clear-to-Q of the Core Register	0.87	ns
t_{PRE2Q}	Asynchronous Preset-to-Q of the Core Register	0.89	ns
t_{REMCLR}	Asynchronous Clear Removal Time for the Core Register	0.00	ns
t_{RECCLR}	Asynchronous Clear Recovery Time for the Core Register	0.24	ns
t_{REMPRE}	Asynchronous Preset Removal Time for the Core Register	0.00	ns
t_{RECPRE}	Asynchronous Preset Recovery Time for the Core Register	0.24	ns
t_{WCLR}	Asynchronous Clear Minimum Pulse Width for the Core Register	0.46	ns
t_{WPRE}	Asynchronous Preset Minimum Pulse Width for the Core Register	0.46	ns
t_{CKMPWH}	Clock Minimum Pulse Width High for the Core Register	0.95	ns
t_{CKMPWL}	Clock Minimum Pulse Width Low for the Core Register	0.95	ns

Note: For specific junction temperature and voltage supply levels, refer to Table 2-7 on page 2-6 for derating values.

Global Resource Characteristics

AGLP125 Clock Tree Topology

Clock delays are device-specific. Figure 2-21 is an example of a global tree used for clock routing. The global tree presented in Figure 2-21 is driven by a CCC located on the west side of the AGLP125 device. It is used to drive all D-flip-flops in the device.

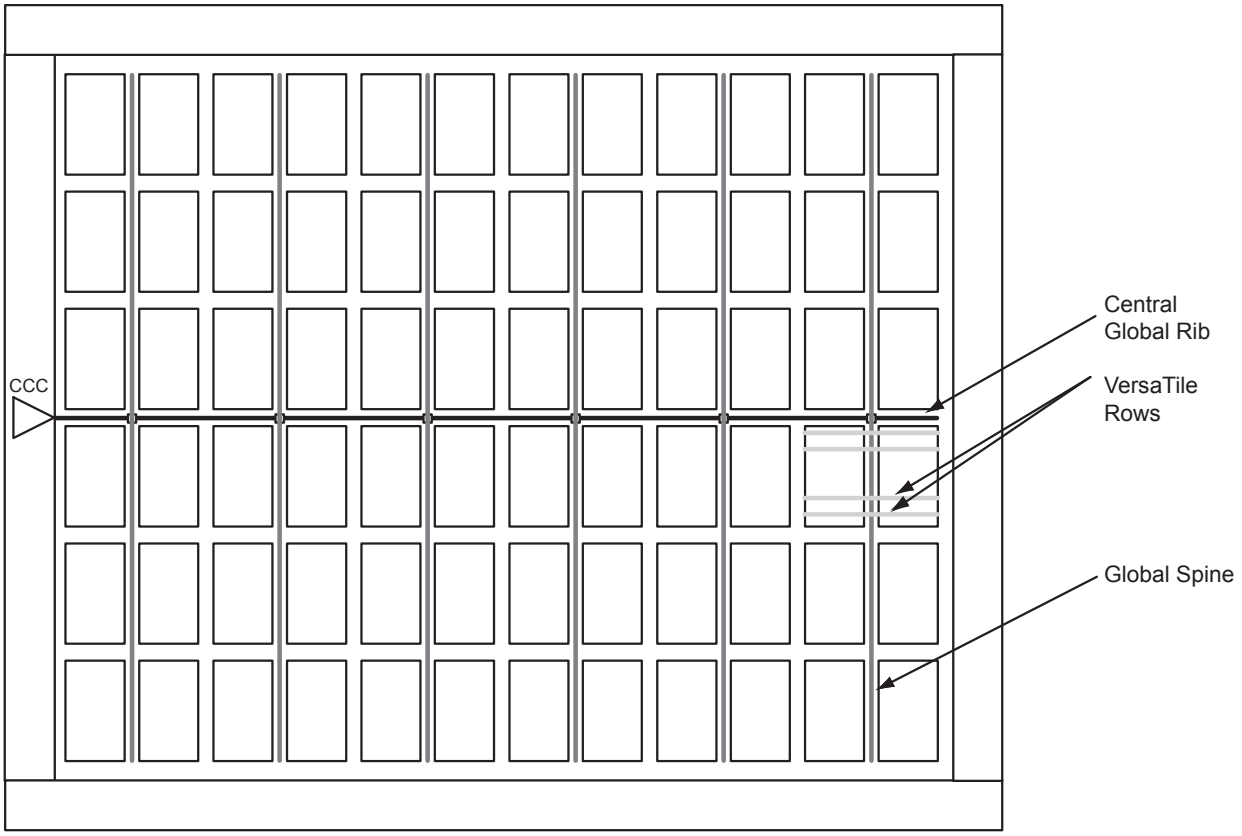

Figure 2-21 **• Example of Global Tree Use in an AGLP125 Device for Clock Routing**

Global Tree Timing Characteristics

Global clock delays include the central rib delay, the spine delay, and the row delay. Delays do not include I/O input buffer clock delays, as these are I/O standard–dependent, and the clock may be driven and conditioned internally by the CCC module. For more details on clock conditioning capabilities, refer to the "Clock Conditioning Circuits" section on page 2-61. Table 2-84 to Table 2-89 on page 2-60 present minimum and maximum global clock delays within each device. Minimum and maximum delays are measured with minimum and maximum loading.

Timing Characteristics

1.5 V DC Core Voltage

***Table 2-84* • AGLP030 Global Resource**
Commercial-Case Conditions: T_J = 70°C, VCC = 1.425 V

Parameter	Description	Std.		Units
		Min.[1]	Max.[2]	
t_{RCKL}	Input Low Delay for Global Clock	1.21	1.42	ns
t_{RCKH}	Input High Delay for Global Clock	1.23	1.49	ns
$t_{RCKMPWH}$	Minimum Pulse Width High for Global Clock	1.18		ns
$t_{RCKMPWL}$	Minimum Pulse Width Low for Global Clock	1.15		ns
t_{RCKSW}	Maximum Skew for Global Clock		0.27	ns

Notes:

1. *Value reflects minimum load. The delay is measured from the CCC output to the clock pin of a sequential element, located in a lightly loaded row (single element is connected to the global net).*
2. *Value reflects maximum load. The delay is measured on the clock pin of the farthest sequential element, located in a fully loaded row (all available flip-flops are connected to the global net in the row).*
3. *For specific junction temperature and voltage supply levels, refer to Table 2-6 on page 2-6 for derating values.*

***Table 2-85* • AGLP060 Global Resource**
Commercial-Case Conditions: T_J = 70°C, VCC = 1.425 V

Parameter	Description	Std.		Units
		Min.[1]	Max.[2]	
t_{RCKL}	Input Low Delay for Global Clock	1.32	1.62	ns
t_{RCKH}	Input High Delay for Global Clock	1.34	1.72	ns
$t_{RCKMPWH}$	Minimum Pulse Width High for Global Clock	1.18		ns
$t_{RCKMPWL}$	Minimum Pulse Width Low for Global Clock	1.15		ns
t_{RCKSW}	Maximum Skew for Global Clock		0.38	ns

Notes:

1. *Value reflects minimum load. The delay is measured from the CCC output to the clock pin of a sequential element, located in a lightly loaded row (single element is connected to the global net).*
2. *Value reflects maximum load. The delay is measured on the clock pin of the farthest sequential element, located in a fully loaded row (all available flip-flops are connected to the global net in the row).*
3. *For specific junction temperature and voltage supply levels, refer to Table 2-6 on page 2-6 for derating values.*

***Table 2-86* • AGLP125 Global Resource**
Commercial-Case Conditions: T_J = 70°C, VCC = 1.425 V

Parameter	Description	Std.		Units
		Min.[1]	Max.[2]	
t_{RCKL}	Input Low Delay for Global Clock	1.36	1.71	ns
t_{RCKH}	Input High Delay for Global Clock	1.39	1.82	ns
$t_{RCKMPWH}$	Minimum Pulse Width High for Global Clock	1.18		ns
$t_{RCKMPWL}$	Minimum Pulse Width Low for Global Clock	1.15		ns
t_{RCKSW}	Maximum Skew for Global Clock		0.43	ns

Notes:

1. *Value reflects minimum load. The delay is measured from the CCC output to the clock pin of a sequential element, located in a lightly loaded row (single element is connected to the global net).*
2. *Value reflects maximum load. The delay is measured on the clock pin of the farthest sequential element, located in a fully loaded row (all available flip-flops are connected to the global net in the row).*
3. *For specific junction temperature and voltage supply levels, refer to Table 2-6 on page 2-6 for derating values.*

1.2 V DC Core Voltage

***Table 2-87* • AGLP030 Global Resource**
Commercial-Case Conditions: T_J = 70°C, VCC = 1.14 V

Parameter	Description	Std.		Units
		Min.[1]	Max.[2]	
t_{RCKL}	Input Low Delay for Global Clock	1.80	2.09	ns
t_{RCKH}	Input High Delay for Global Clock	1.88	2.27	ns
$t_{RCKMPWH}$	Minimum Pulse Width High for Global Clock	1.40		ns
$t_{RCKMPWL}$	Minimum Pulse Width Low for Global Clock	1.65		ns
t_{RCKSW}	Maximum Skew for Global Clock		0.39	ns

Notes:

1. *Value reflects minimum load. The delay is measured from the CCC output to the clock pin of a sequential element, located in a lightly loaded row (single element is connected to the global net).*
2. *Value reflects maximum load. The delay is measured on the clock pin of the farthest sequential element, located in a fully loaded row (all available flip-flops are connected to the global net in the row).*
3. *For specific junction temperature and voltage supply levels, refer to Table 2-7 on page 2-6 for derating values.*

Table 2-88 **• AGLP060 Global Resource**
Commercial-Case Conditions: T_J = 70°C, VCC = 1.14 V

Parameter	Description	Std.		Units
		Min.[1]	Max.[2]	
t_{RCKL}	Input Low Delay for Global Clock	2.02	2.43	ns
t_{RCKH}	Input High Delay for Global Clock	2.09	2.65	ns
$t_{RCKMPWH}$	Minimum Pulse Width High for Global Clock	1.40		ns
$t_{RCKMPWL}$	Minimum Pulse Width Low for Global Clock	1.65		ns
t_{RCKSW}	Maximum Skew for Global Clock		0.56	ns

Notes:

1. *Value reflects minimum load. The delay is measured from the CCC output to the clock pin of a sequential element, located in a lightly loaded row (single element is connected to the global net).*
2. *Value reflects maximum load. The delay is measured on the clock pin of the farthest sequential element, located in a fully loaded row (all available flip-flops are connected to the global net in the row).*
3. *For specific junction temperature and voltage supply levels, refer to Table 2-7 on page 2-6 for derating values.*

Table 2-89 **• AGLP125 Global Resource**
Commercial-Case Conditions: T_J = 70°C, VCC = 1.14 V

Parameter	Description	Std.		Units
		Min.[1]	Max.[2]	
t_{RCKL}	Input Low Delay for Global Clock	2.08	2.54	ns
t_{RCKH}	Input High Delay for Global Clock	2.15	2.77	ns
$t_{RCKMPWH}$	Minimum Pulse Width High for Global Clock	1.40		ns
$t_{RCKMPWL}$	Minimum Pulse Width Low for Global Clock	1.65		ns
t_{RCKSW}	Maximum Skew for Global Clock		0.62	ns

Notes:

1. *Value reflects minimum load. The delay is measured from the CCC output to the clock pin of a sequential element, located in a lightly loaded row (single element is connected to the global net).*
2. *Value reflects maximum load. The delay is measured on the clock pin of the farthest sequential element, located in a fully loaded row (all available flip-flops are connected to the global net in the row).*
3. *For specific junction temperature and voltage supply levels, refer to Table 2-7 on page 2-6 for derating values.*

Clock Conditioning Circuits

CCC Electrical Specifications

Timing Characteristics

***Table 2-90* • IGLOO PLUS CCC/PLL Specification**
For IGLOO PLUS V2 or V5 devices, 1.5 V DC Core Supply Voltage

Parameter	Min.	Typ.	Max.	Units
Clock Conditioning Circuitry Input Frequency f_{IN_CCC}	1.5		250	MHz
Clock Conditioning Circuitry Output Frequency f_{OUT_CCC}	0.75		250	MHz
Delay Increments in Programmable Delay Blocks [1, 2]		360[3]		ps
Number of Programmable Values in Each Programmable Delay Block			32	
Serial Clock (SCLK) for Dynamic PLL[4,5]			100	MHz
Input Cycle-to-Cycle Jitter (peak magnitude)			1	ns
Acquisition Time				
LockControl = 0			300	µs
LockControl = 1			6.0	ms
Tracking Jitter[6]				
LockControl = 0			2.5	ns
LockControl = 1			1.5	ns
Output Duty Cycle	48.5		51.5	%
Delay Range in Block: Programmable Delay 1 [1, 2]	1.25		15.65	ns
Delay Range in Block: Programmable Delay 2 [1, 2]	0.469		15.65	ns
Delay Range in Block: Fixed Delay [1, 2]		3.5		ns
VCO Output Peak-to-Peak Period Jitter F_{CCC_OUT}[7]	Maximum Peak-to-Peak Period Jitter[7,8,9]			
	SSO ≤ 2	SSO ≤ 4	SSO ≤ 8	SSO ≤ 16
0.75 MHz to 50 MHz	0.50%	0.60%	0.80%	1.20%
50 MHz to 250 MHz	2.50%	4.00%	6.00%	12.00%

Notes:

1. *This delay is a function of voltage and temperature. See Table 2-6 on page 2-6 and Table 2-7 on page 2-6 for deratings.*
2. *T_J = 25°C, VCC = 1.5 V*
3. *When the CCC/PLL core is generated by Microsemi core generator software, not all delay values of the specified delay increments are available. Refer to the Libero SoC Online Help associated with the core for more information.*
4. *Maximum value obtained for a STD speed grade device in Worst Case Commercial Conditions. For specific junction temperature and voltage supply, refer to Table 2-6 on page 2-6 and Table 2-7 on page 2-6 for derating values.*
5. *The AGLP030 device does not support a PLL.*
6. *Tracking jitter is defined as the variation in clock edge position of PLL outputs with reference to the PLL input clock edge. Tracking jitter does not measure the variation in PLL output period, which is covered by the period jitter parameter.*
7. *VCO output jitter is calculated as a percentage of the VCO frequency. The jitter (in ps) can be calculated by multiplying the VCO period by the per cent jitter. The VCO jitter (in ps) applies to CCC_OUT regardless of the output divider settings. For example, if the jitter on VCO is 300 ps, the jitter on CCC_OUT is also 300 ps, regardless of the output divider settings.*
8. *Measurements done with LVTTL 3.3 V 8 mA I/O drive strength and high slew rate, VCC/VCCPLL = 1.425 V, VCCI = 3.3 V, VQ/PQ/TQ type of packages, 20 pF load.*
9. *SSO are outputs that are synchronous to a single clock domain and have clock-to-out times that are within ±200 ps of each other. Switching I/Os are placed outside of the PLL bank. Refer to the "Simultaneously Switching Outputs (SSOs) and Printed Circuit Board Layout" section in the IGLOO PLUS FPGA Fabric User's Guide.*

***Table 2-91* • IGLOO PLUS CCC/PLL Specification**
For IGLOO PLUS V2 Devices, 1.2 V DC Core Supply Voltage

Parameter	Min.	Typ.	Max.	Units
Clock Conditioning Circuitry Input Frequency f_{IN_CCC}	1.5		160	MHz
Clock Conditioning Circuitry Output Frequency f_{OUT_CCC}	0.75		160	MHz
Delay Increments in Programmable Delay Blocks [1, 2]		580[3]		ps
Number of Programmable Values in Each Programmable Delay Block			32	
Serial Clock (SCLK) for Dynamic PLL[4,5]			60	MHz
Input Cycle-to-Cycle Jitter (peak magnitude)			.25	ns
Acquisition Time				
LockControl = 0			300	µs
LockControl = 1			6.0	ms
Tracking Jitter[6]				
LockControl = 0			4	ns
LockControl = 1			3	ns
Output Duty Cycle	48.5		51.5	%
Delay Range in Block: Programmable Delay 1 [1, 2]	2.3		20.86	ns
Delay Range in Block: Programmable Delay 2 [1, 2]	0.863		20.86	ns
Delay Range in Block: Fixed Delay [1, 2]		5.7		ns
VCO Output Peak-to-Peak Period Jitter F_{CCC_OUT}[7]	Maximum Peak-to-Peak Period Jitter[7,8,9]			
	SSO ≤ 2	SSO ≤ 4	SSO ≤ 8	SSO ≤ 16
0.75 MHz to 50 MHz	0.50%	1.20%	2.00%	3.00%
50 MHz to 160 MHz	2.50%	5.00%	7.00%	15.00%

Notes:

1. *This delay is a function of voltage and temperature. See Table 2-6 on page 2-6 and Table 2-7 on page 2-6 for deratings.*
2. *T_J = 25°C, VCC = 1.2 V*
3. *When the CCC/PLL core is generated by Microsemi core generator software, not all delay values of the specified delay increments are available. Refer to the online help associated with the core for more information.*
4. *Maximum value obtained for a STD speed grade device in Worst Case Commercial Conditions.For specific junction temperature and voltage supply levels, refer to Table 2-6 on page 2-6 and Table 2-7 on page 2-6 for derating values.*
5. *The AGLP030 device does not support PLL.*
6. *Tracking jitter is defined as the variation in clock edge position of PLL outputs with reference to PLL input clock edge. Tracking jitter does not measure the variation in PLL output period, which is covered by period jitter parameter.*
7. *VCO output jitter is calculated as a percentage of the VCO frequency. The jitter (in ps) can be calculated by multiplying the VCO period by the per cent jitter. The VCO jitter (in ps) applies to CCC_OUT regardless of the output divider settings. For example, if the jitter on VCO is 300 ps, the jitter on CCC_OUT is also 300 ps, regardless of the output divider settings.*
8. *Measurements are done with LVTTL 3.3 V, 8 mA, I/O drive strength and high slew rate. VCC/VCCPLL = 1.14 V, VCCI = 3.3 V, VQ/PQ/TQ type of packages, 20 pF load.*
9. *SSO are outputs that are synchronous to a single clock domain, and have their clock-to-out times within ±200 ps of each other. Switching I/Os are placed outside of the PLL bank. Refer to the "Simultaneously Switching Outputs (SSOs) and Printed Circuit Board Layout" section in the IGLOO PLUS FPGA Fabric User's Guide*

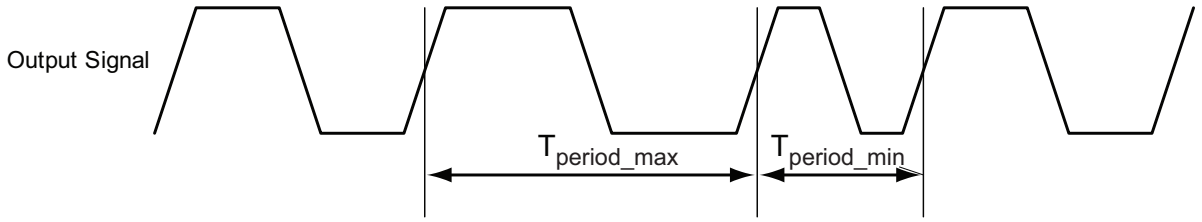

Note: Peak-to-peak jitter measurements are defined by $T_{peak\text{-}to\text{-}peak} = T_{period_max} - T_{period_min}$.

Figure 2-22 • **Peak-to-Peak Jitter Definition**

Embedded SRAM and FIFO Characteristics

SRAM

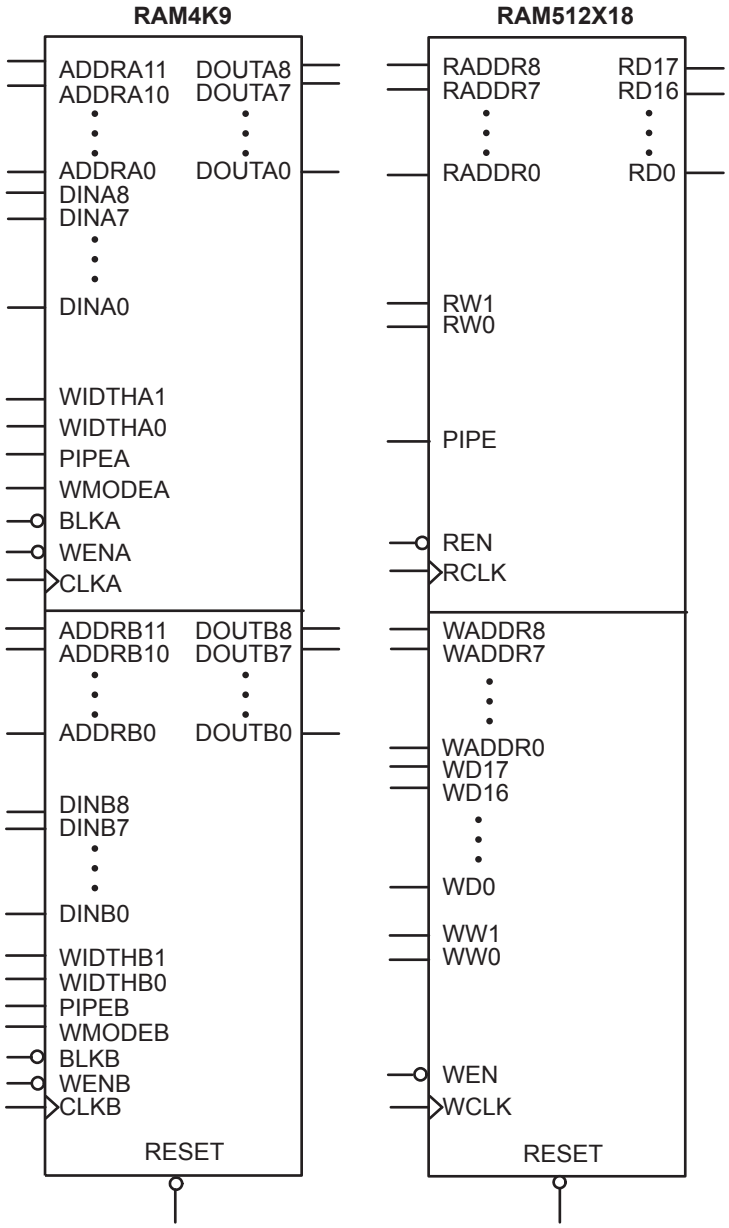

Figure 2-23 • **RAM Models**

Timing Waveforms

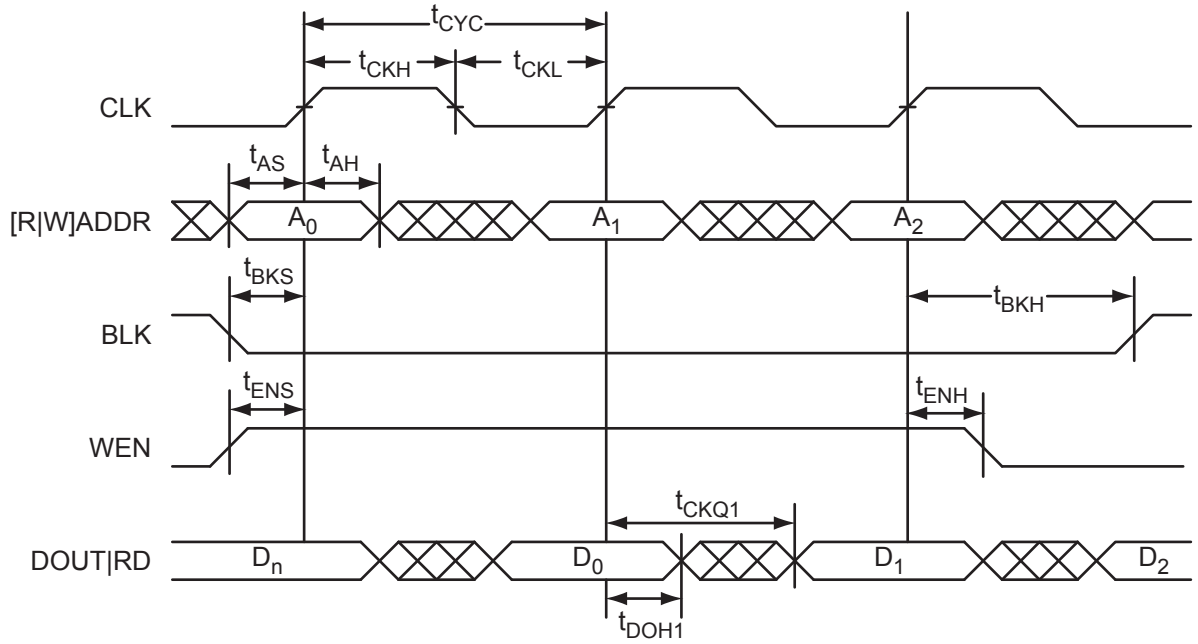

Figure 2-24 **• RAM Read for Pass-Through Output. Applicable to Both RAM4K9 and RAM512x18.**

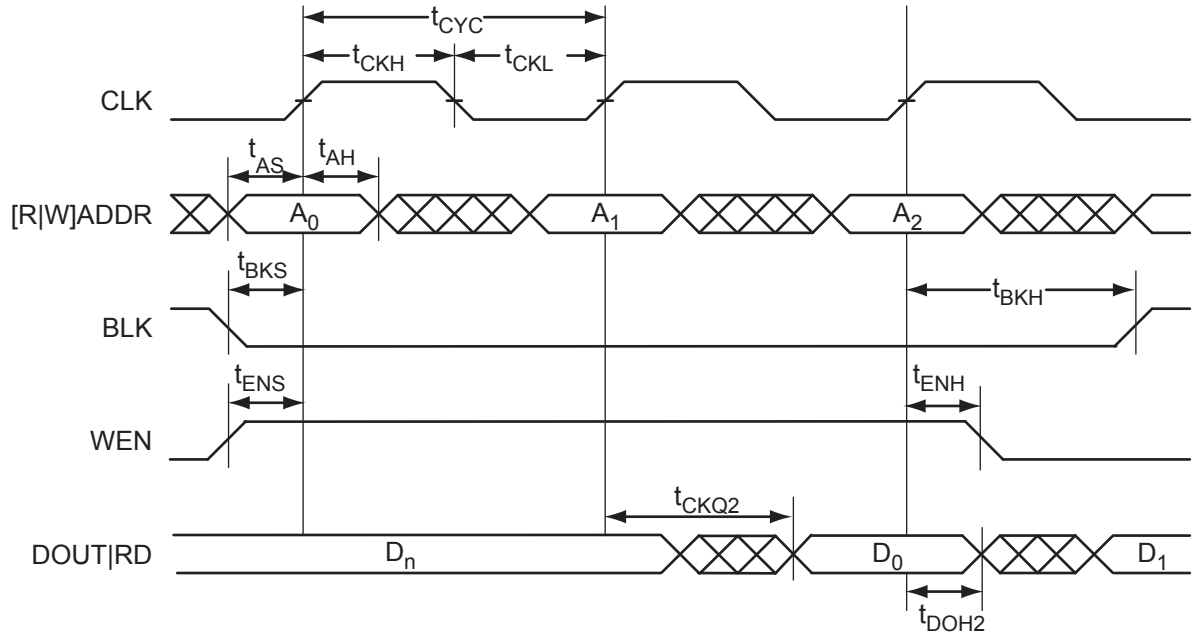

Figure 2-25 **• RAM Read for Pipelined Output. Applicable to Both RAM4K9 and RAM512x18.**

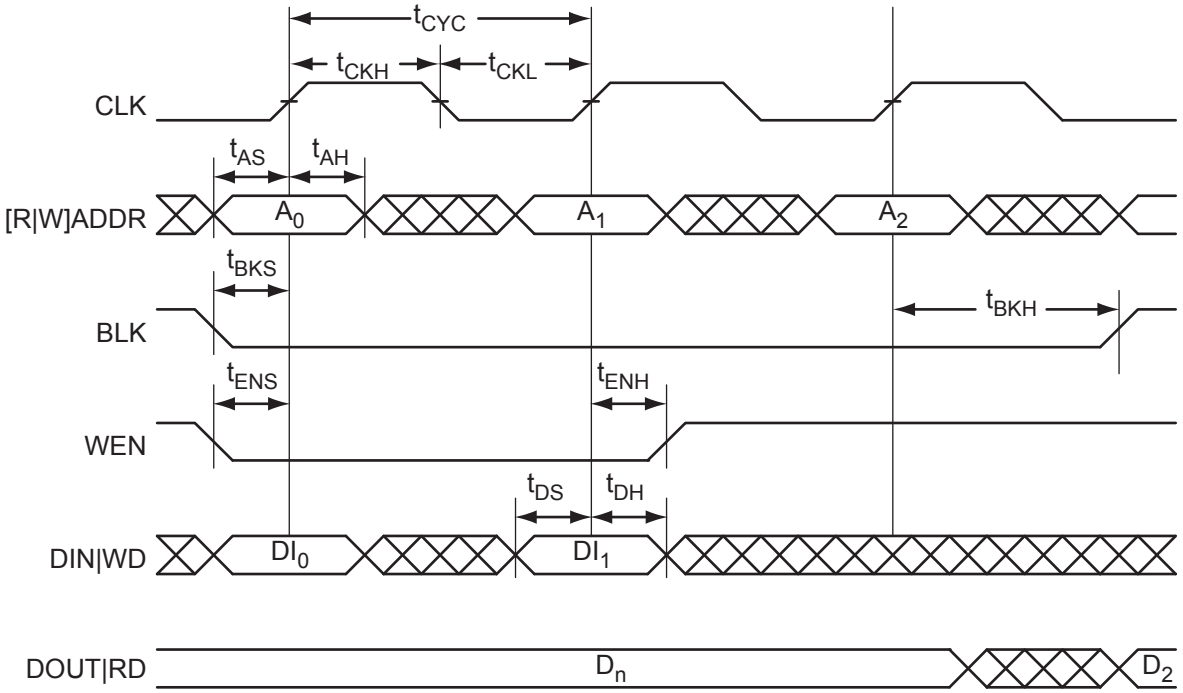

Figure 2-26 **• RAM Write, Output Retained. Applicable to Both RAM4K9 and RAM512x18.**

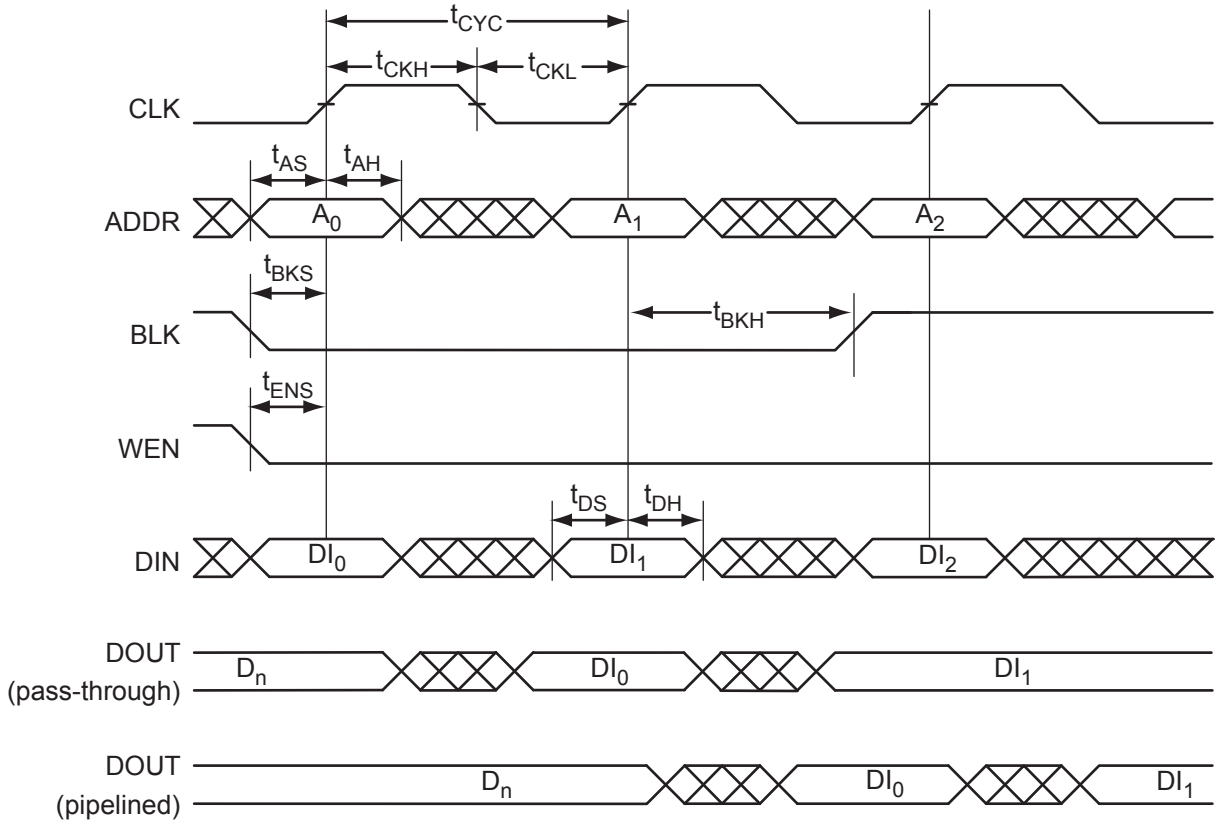

Figure 2-27 **• RAM Write, Output as Write Data (WMODE = 1). Applicable to RAM4K9 only.**

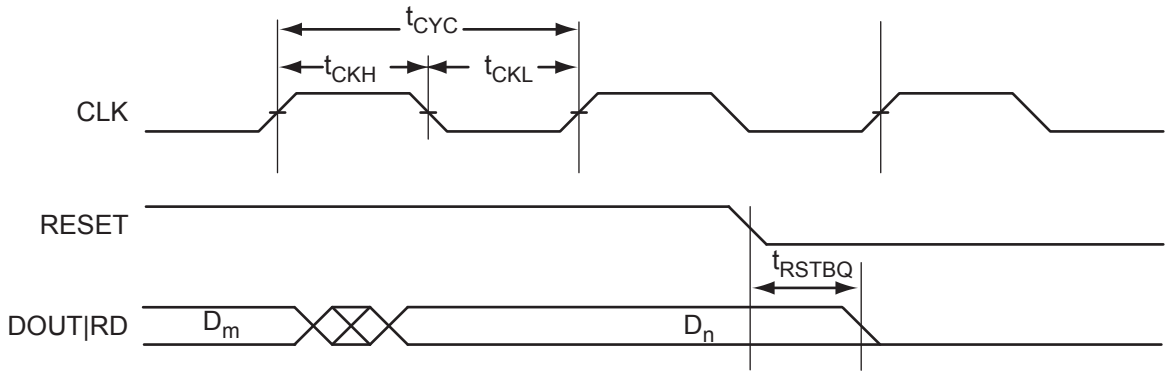

Figure 2-28 **• RAM Reset**

Timing Characteristics

1.5 V DC Core Voltage

***Table 2-92* • RAM4K9**
Commercial-Case Conditions: T_J = 70°C, Worst-Case VCC = 1.425 V

Parameter	Description	Std.	Units
t_{AS}	Address setup time	0.69	ns
t_{AH}	Address hold time	0.13	ns
t_{ENS}	REN, WEN setup time	0.68	ns
t_{ENH}	REN, WEN hold time	0.13	ns
t_{BKS}	BLK setup time	1.37	ns
t_{BKH}	BLK hold time	0.13	ns
t_{DS}	Input data (DIN) setup time	0.59	ns
t_{DH}	Input data (DIN) hold time	0.30	ns
t_{CKQ1}	Clock High to new data valid on DOUT (output retained, WMODE = 0)	2.94	ns
	Clock High to new data valid on DOUT (flow-through, WMODE = 1)	2.55	ns
t_{CKQ2}	Clock High to new data valid on DOUT (pipelined)	1.51	ns
t_{C2CWWL}[1]	Address collision clk-to-clk delay for reliable write after write on same address – applicable to closing edge	0.29	ns
t_{C2CRWH}[1]	Address collision clk-to-clk delay for reliable read access after write on same address – applicable to opening edge	0.24	ns
t_{C2CWRH}[1]	Address collision clk-to-clk delay for reliable write access after read on same address – applicable to opening edge	0.40	ns
t_{RSTBQ}	RESET Low to data out Low on DOUT (flow-through)	1.72	ns
	RESET Low to data out Low on DOUT (pipelined)	1.72	ns
$t_{REMRSTB}$	RESET removal	0.51	ns
$t_{RECRSTB}$	RESET recovery	2.68	ns
$t_{MPWRSTB}$	RESET minimum pulse width	0.68	ns
t_{CYC}	Clock cycle time	6.24	ns
F_{MAX}	Maximum frequency	160	MHz

Notes:

1. *For more information, refer to the application note* Simultaneous Read-Write Operations in Dual-Port SRAM for Flash-Based cSoCs and FPGAs.
2. *For specific junction temperature and voltage supply levels, refer to Table 2-6 on page 2-6 for derating values.*

***Table 2-93* • RAM512X18**
Commercial-Case Conditions: T_J = 70°C, Worst-Case VCC = 1.425 V

Parameter	Description	Std.	Units
t_{AS}	Address setup time	0.69	ns
t_{AH}	Address hold time	0.13	ns
t_{ENS}	REN, WEN setup time	0.61	ns
t_{ENH}	REN, WEN hold time	0.07	ns
t_{DS}	Input data (WD) setup time	0.59	ns
t_{DH}	Input data (WD) hold time	0.30	ns
t_{CKQ1}	Clock High to new data valid on RD (output retained)	3.51	ns
t_{CKQ2}	Clock High to new data valid on RD (pipelined)	1.43	ns
t_{C2CRWH}[1]	Address collision clk-to-clk delay for reliable read access after write on same address – applicable to opening edge	0.21	ns
t_{C2CWRH}[1]	Address collision clk-to-clk delay for reliable write access after read on same address – applicable to opening edge	0.25	ns
t_{RSTBQ}	RESET Low to data out Low on RD (flow-through)	1.72	ns
	RESET Low to data out Low on RD (pipelined)	1.72	ns
$t_{REMRSTB}$	RESET removal	0.51	ns
$t_{RECRSTB}$	RESET recovery	2.68	ns
$t_{MPWRSTB}$	RESET minimum pulse width	0.68	ns
t_{CYC}	Clock cycle time	6.24	ns
F_{MAX}	Maximum frequency	160	MHz

Notes:

1. *For more information, refer to the application note* Simultaneous Read-Write Operations in Dual-Port SRAM for Flash-Based cSoCs and FPGAs.
2. *For specific junction temperature and voltage supply levels, refer to Table 2-6 on page 2-6 for derating values.*

1.2 V DC Core Voltage

***Table 2-94* • RAM4K9**
Commercial-Case Conditions: T_J = 70°C, Worst-Case VCC = 1.14 V

Parameter	Description	Std.	Units
t_{AS}	Address setup time	1.28	ns
t_{AH}	Address hold time	0.25	ns
t_{ENS}	REN, WEN setup time	1.25	ns
t_{ENH}	REN, WEN hold time	0.25	ns
t_{BKS}	BLK setup time	2.54	ns
t_{BKH}	BLK hold time	0.25	ns
t_{DS}	Input data (DIN) setup time	1.10	ns
t_{DH}	Input data (DIN) hold time	0.55	ns
t_{CKQ1}	Clock High to new data valid on DOUT (output retained, WMODE = 0)	5.51	ns
	Clock High to new data valid on DOUT (flow-through, WMODE = 1)	4.77	ns
t_{CKQ2}	Clock High to new data valid on DOUT (pipelined)	2.82	ns
t_{C2CWWL}[1]	Address collision clk-to-clk delay for reliable write after write on same address – applicable to closing edge	0.30	ns
t_{C2CRWH}[1]	Address collision clk-to-clk delay for reliable read access after write on same address – applicable to opening edge	0.32	ns
t_{C2CWRH}[1]	Address collision clk-to-clk delay for reliable write access after read on same address – applicable to opening edge	0.44	ns
t_{RSTBQ}	RESET Low to data out Low on DOUT (flow-through)	3.21	ns
	RESET Low to data out Low on DOUT (pipelined)	3.21	ns
$t_{REMRSTB}$	RESET removal	0.93	ns
$t_{RECRSTB}$	RESET recovery	4.94	ns
$t_{MPWRSTB}$	RESET minimum pulse width	1.18	ns
t_{CYC}	Clock cycle time	10.90	ns
F_{MAX}	Maximum frequency	92	MHz

Notes:

1. *For more information, refer to the application note* Simultaneous Read-Write Operations in Dual-Port SRAM for Flash-Based cSoCs and FPGAs.
2. *For specific junction temperature and voltage supply levels, refer to Table 2-6 on page 2-6 for derating values.*

***Table 2-95* • RAM512X18**
Commercial-Case Conditions: T_J = 70°C, Worst-Case VCC = 1.14 V

Parameter	Description	Std.	Units
t_{AS}	Address setup time	1.28	ns
t_{AH}	Address hold time	0.25	ns
t_{ENS}	REN, WEN setup time	1.13	ns
t_{ENH}	REN, WEN hold time	0.13	ns
t_{DS}	Input data (WD) setup time	1.10	ns
t_{DH}	Input data (WD) hold time	0.55	ns
t_{CKQ1}	Clock High to new data valid on RD (output retained)	6.56	ns
t_{CKQ2}	Clock High to new data valid on RD (pipelined)	2.67	ns
t_{C2CRWH}[1]	Address collision clk-to-clk delay for reliable read access after write on same address – applicable to opening edge	0.29	ns
t_{C2CWRH}[1]	Address collision clk-to-clk delay for reliable write access after read on same address – applicable to opening edge	0.36	ns
t_{RSTBQ}	RESET Low to data out Low on RD (flow through)	3.21	ns
	RESET Low to data out Low on RD (pipelined)	3.21	ns
$t_{REMRSTB}$	RESET removal	0.93	ns
$t_{RECRSTB}$	RESET recovery	4.94	ns
$t_{MPWRSTB}$	RESET minimum pulse width	1.18	ns
t_{CYC}	Clock cycle time	10.90	ns
F_{MAX}	Maximum frequency	92	MHz

Notes:

1. *For more information, refer to the application note* Simultaneous Read-Write Operations in Dual-Port SRAM for Flash-Based cSoCs and FPGAs.
2. *For specific junction temperature and voltage supply levels, refer to Table 2-6 on page 2-6 for derating values.*

FIFO

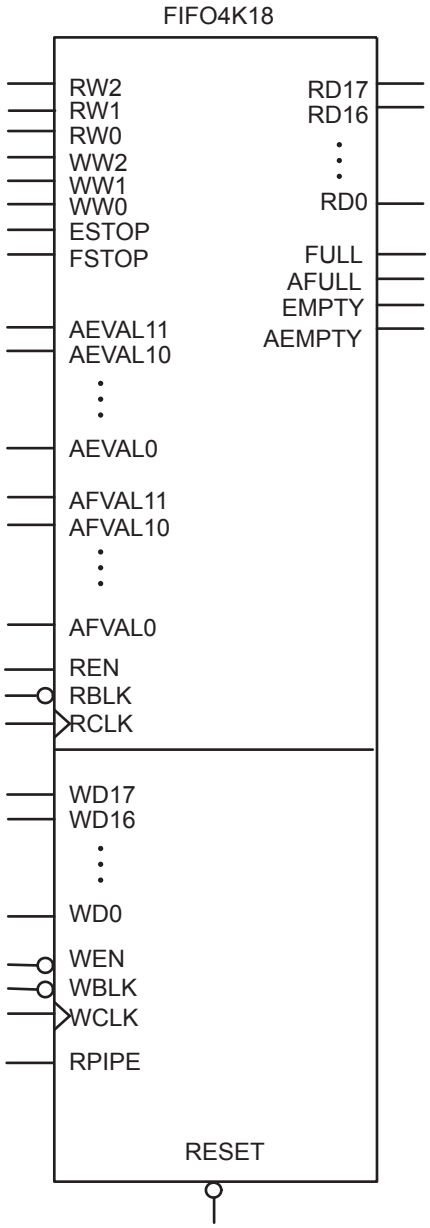

Figure 2-29 **• FIFO Model**

Timing Waveforms

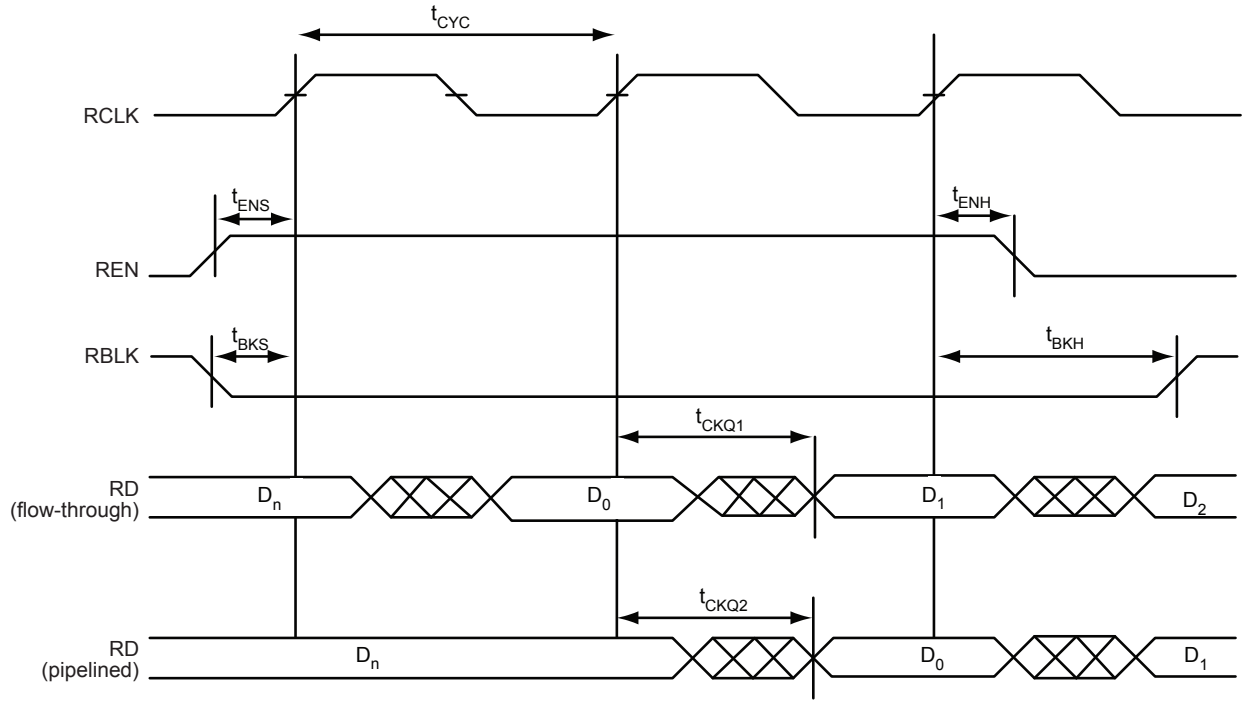

***Figure 2-30* • FIFO Read**

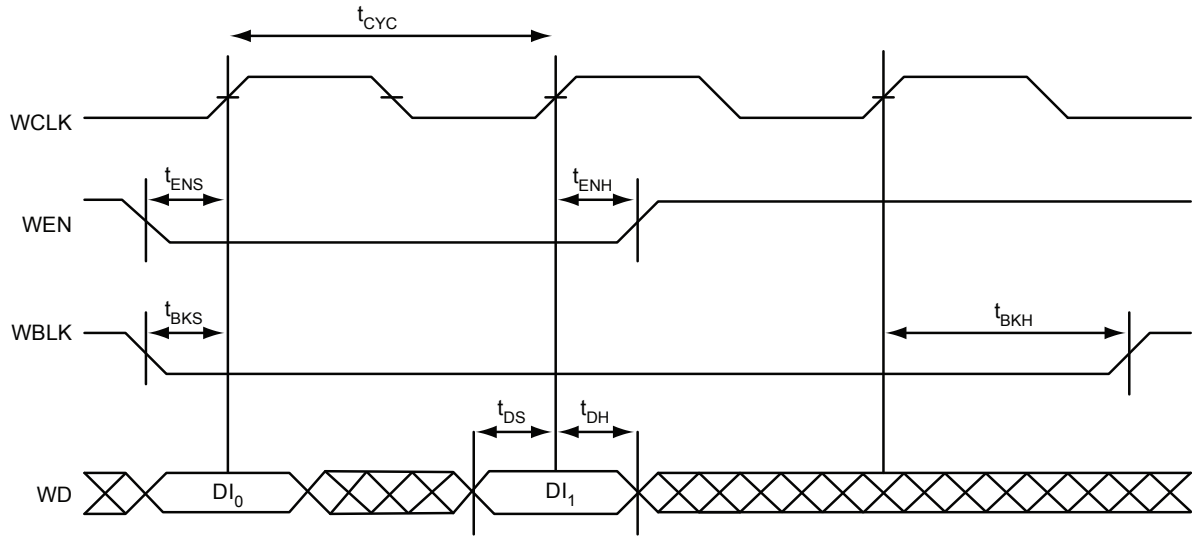

***Figure 2-31* • FIFO Write**

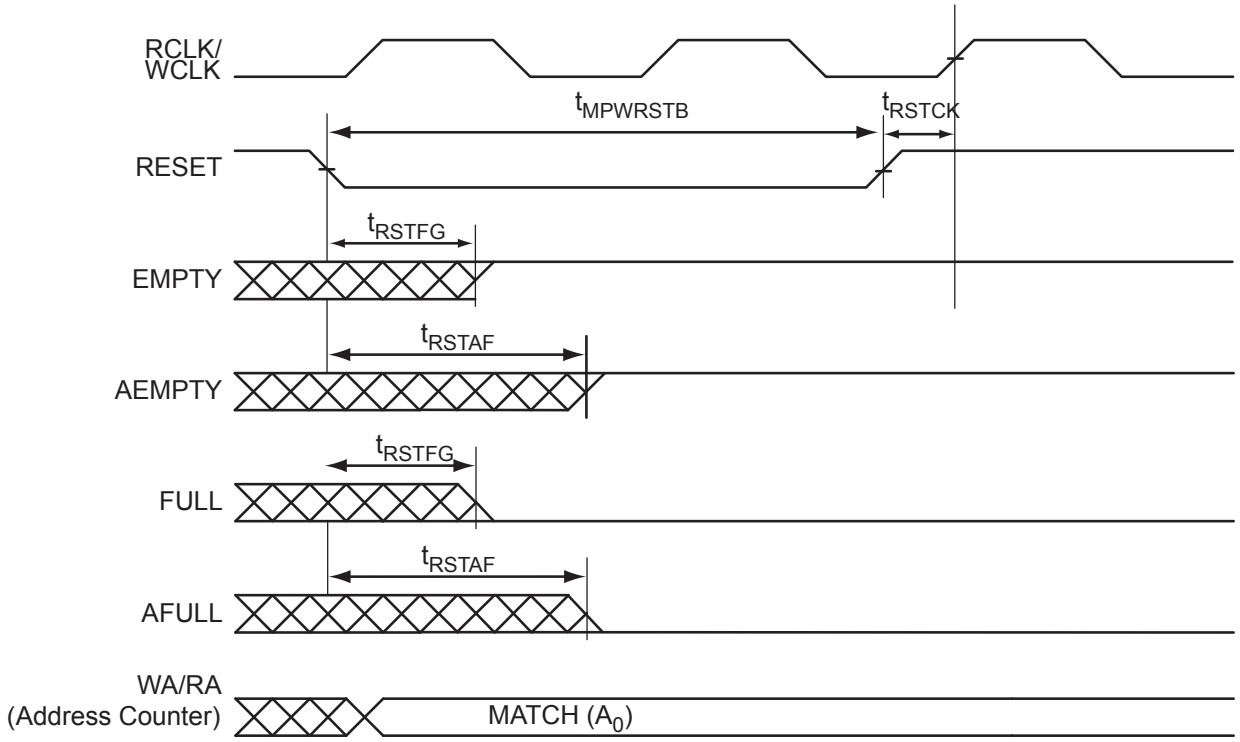

Figure 2-32 **• FIFO Reset**

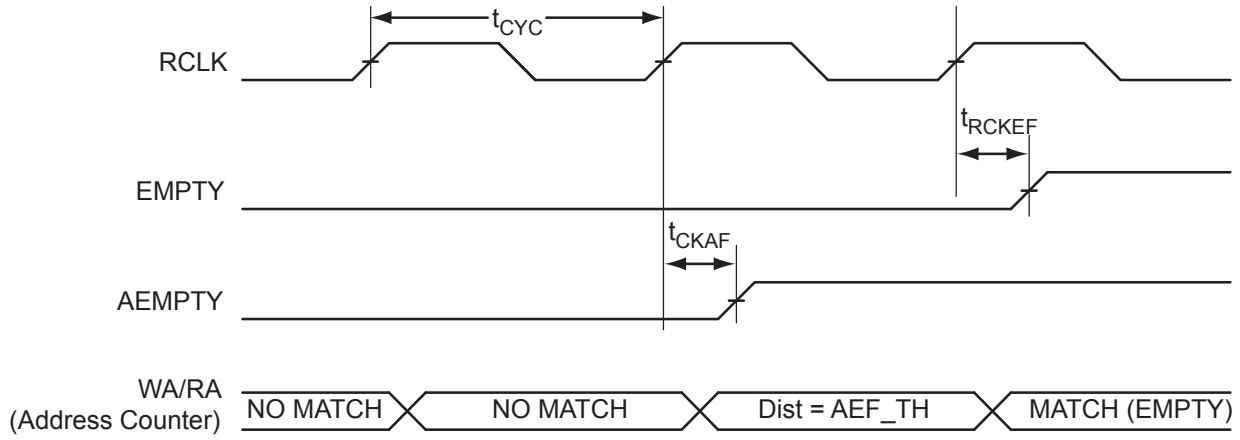

Figure 2-33 **• FIFO EMPTY Flag and AEMPTY Flag Assertion**

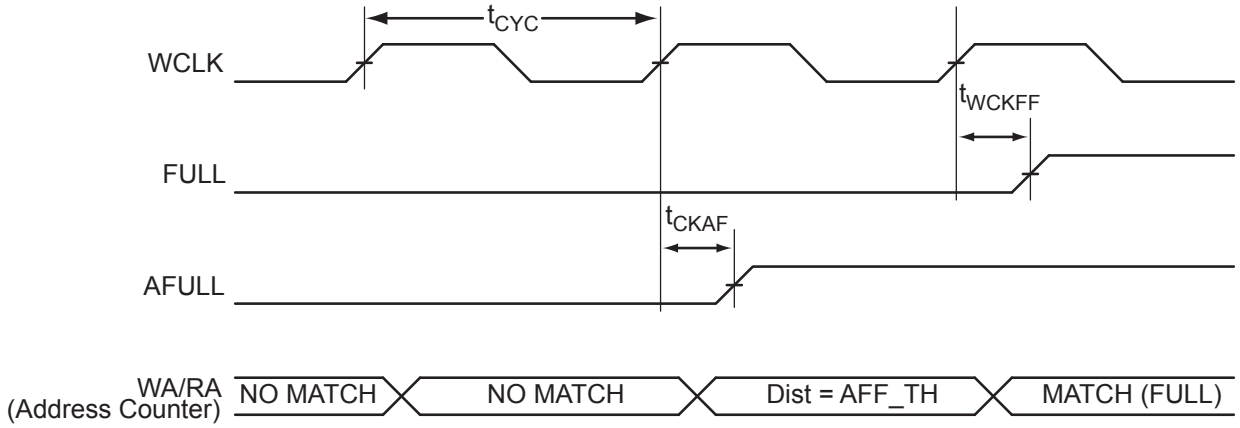

***Figure 2-34* • FIFO FULL Flag and AFULL Flag Assertion**

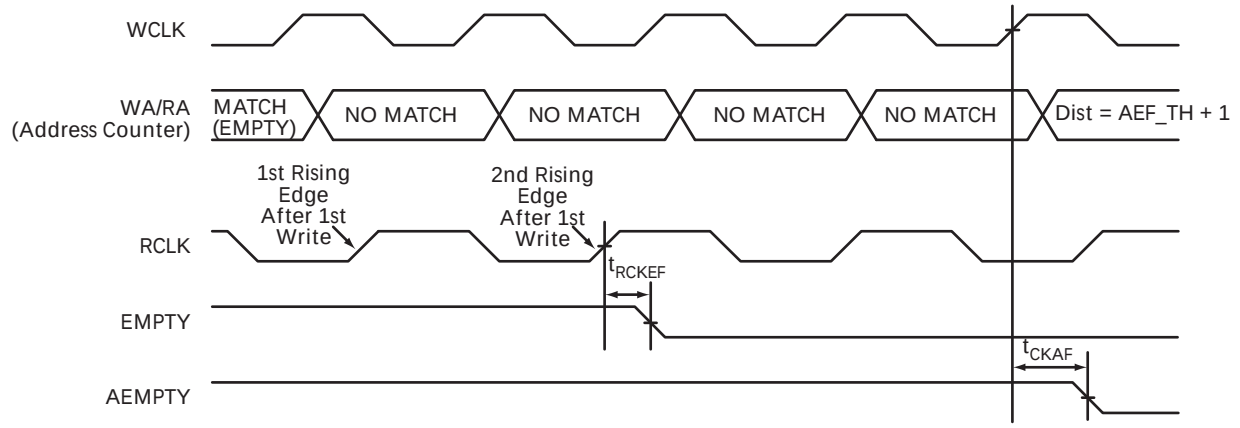

***Figure 2-35* • FIFO EMPTY Flag and AEMPTY Flag Deassertion**

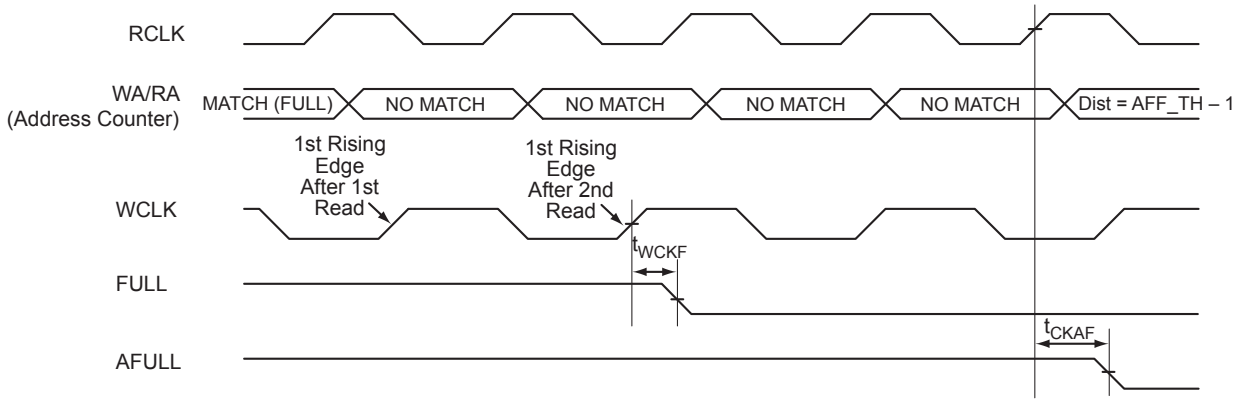

***Figure 2-36* • FIFO FULL Flag and AFULL Flag Deassertion**

Timing Characteristics

1.5 V DC Core Voltage

***Table 2-96* • FIFO**

Worst Commercial-Case Conditions: T_J = 70°C, VCC = 1.425 V

Parameter	Description	Std.	Units
t_{ENS}	REN, WEN Setup Time	1.66	ns
t_{ENH}	REN, WEN Hold Time	0.13	ns
t_{BKS}	BLK Setup Time	0.30	ns
t_{BKH}	BLK Hold Time	0.00	ns
t_{DS}	Input Data (WD) Setup Time	0.63	ns
t_{DH}	Input Data (WD) Hold Time	0.20	ns
t_{CKQ1}	Clock High to New Data Valid on RD (flow-through)	2.77	ns
t_{CKQ2}	Clock High to New Data Valid on RD (pipelined)	1.50	ns
t_{RCKEF}	RCLK High to Empty Flag Valid	2.94	ns
t_{WCKFF}	WCLK High to Full Flag Valid	2.79	ns
t_{CKAF}	Clock High to Almost Empty/Full Flag Valid	10.71	ns
t_{RSTFG}	RESET Low to Empty/Full Flag Valid	2.90	ns
t_{RSTAF}	RESET Low to Almost Empty/Full Flag Valid	10.60	ns
t_{RSTBQ}	RESET Low to Data Out Low on RD (flow-through)	1.68	ns
	RESET Low to Data Out Low on RD (pipelined)	1.68	ns
$t_{REMRSTB}$	RESET Removal	0.51	ns
$t_{RECRSTB}$	RESET Recovery	2.68	ns
$t_{MPWRSTB}$	RESET Minimum Pulse Width	0.68	ns
t_{CYC}	Clock Cycle Time	6.24	ns
F_{MAX}	Maximum Frequency for FIFO	160	MHz

Note: For specific junction temperature and voltage supply levels, refer to Table 2-6 on page 2-6 for derating values.

1.2 V DC Core Voltage

***Table 2-97* • FIFO**
Worst Commercial-Case Conditions: T_J = 70°C, VCC = 1.14 V

Parameter	Description	Std.	Units
t_{ENS}	REN, WEN Setup Time	3.44	ns
t_{ENH}	REN, WEN Hold Time	0.26	ns
t_{BKS}	BLK Setup Time	0.30	ns
t_{BKH}	BLK Hold Time	0.00	ns
t_{DS}	Input Data (WD) Setup Time	1.30	ns
t_{DH}	Input Data (WD) Hold Time	0.41	ns
t_{CKQ1}	Clock High to New Data Valid on RD (flow-through)	5.67	ns
t_{CKQ2}	Clock High to New Data Valid on RD (pipelined)	3.02	ns
t_{RCKEF}	RCLK High to Empty Flag Valid	6.02	ns
t_{WCKFF}	WCLK High to Full Flag Valid	5.71	ns
t_{CKAF}	Clock High to Almost Empty/Full Flag Valid	22.17	ns
t_{RSTFG}	RESET Low to Empty/Full Flag Valid	5.93	ns
t_{RSTAF}	RESET Low to Almost Empty/Full Flag Valid	21.94	ns
t_{RSTBQ}	RESET Low to Data Out Low on RD (flow-through)	3.41	ns
	RESET Low to Data Out Low on RD (pipelined)	3.41	ns
$t_{REMRSTB}$	RESET Removal	1.02	ns
$t_{RECRSTB}$	RESET Recovery	5.48	ns
$t_{MPWRSTB}$	RESET Minimum Pulse Width	1.18	ns
t_{CYC}	Clock Cycle Time	10.90	ns
F_{MAX}	Maximum Frequency for FIFO	92	MHz

Note: For specific junction temperature and voltage supply levels, refer to Table 2-7 on page 2-6 for derating values.

Embedded FlashROM Characteristics

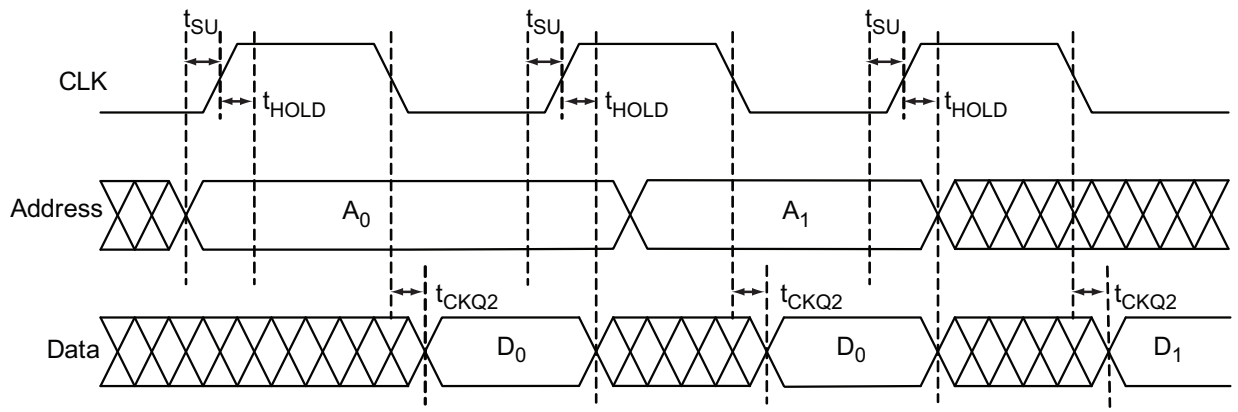

Figure 2-37 **• Timing Diagram**

Timing Characteristics

1.5 V DC Core Voltage

Table 2-98 **• Embedded FlashROM Access Time**
Worst Commercial-Case Conditions: T_J = 70°C, VCC = 1.425 V

Parameter	Description	Std.	Units
t_{SU}	Address Setup Time	0.57	ns
t_{HOLD}	Address Hold Time	0.00	ns
t_{CK2Q}	Clock to Out	17.58	ns
F_{MAX}	Maximum Clock Frequency	15	MHz

1.2 V DC Core Voltage

Table 2-99 **• Embedded FlashROM Access Time**
Worst Commercial-Case Conditions: T_J = 70°C, VCC = 1.14 V

Parameter	Description	Std.	Units
t_{SU}	Address Setup Time	0.59	ns
t_{HOLD}	Address Hold Time	0.00	ns
t_{CK2Q}	Clock to Out	30.94	ns
F_{MAX}	Maximum Clock Frequency	10	MHz

JTAG 1532 Characteristics

JTAG timing delays do not include JTAG I/Os. To obtain complete JTAG timing, add I/O buffer delays to the corresponding standard selected; refer to the I/O timing characteristics in the "User I/O Characteristics" section on page 2-15 for more details.

Timing Characteristics

1.5 V DC Core Voltage

***Table 2-100* • JTAG 1532**
Commercial-Case Conditions: T_J = 70°C, Worst-Case VCC = 1.425 V

Parameter	Description	Std.	Units
t_{DISU}	Test Data Input Setup Time	1.00	ns
t_{DIHD}	Test Data Input Hold Time	2.00	ns
t_{TMSSU}	Test Mode Select Setup Time	1.00	ns
t_{TMDHD}	Test Mode Select Hold Time	2.00	ns
t_{TCK2Q}	Clock to Q (data out)	8.00	ns
t_{RSTB2Q}	Reset to Q (data out)	25.00	ns
F_{TCKMAX}	TCK Maximum Frequency	15	MHz
$t_{TRSTREM}$	ResetB Removal Time	0.58	ns
$t_{TRSTREC}$	ResetB Recovery Time	0.00	ns
$t_{TRSTMPW}$	ResetB Minimum Pulse	TBD	ns

Note: For specific junction temperature and voltage supply levels, refer to Table 2-6 on page 2-6 for derating values.

1.2 V DC Core Voltage

***Table 2-101* • JTAG 1532**
Commercial-Case Conditions: T_J = 70°C, Worst-Case VCC = 1.14 V

Parameter	Description	Std.	Units
t_{DISU}	Test Data Input Setup Time	1.50	ns
t_{DIHD}	Test Data Input Hold Time	3.00	ns
t_{TMSSU}	Test Mode Select Setup Time	1.50	ns
t_{TMDHD}	Test Mode Select Hold Time	3.00	ns
t_{TCK2Q}	Clock to Q (data out)	11.00	ns
t_{RSTB2Q}	Reset to Q (data out)	30.00	ns
F_{TCKMAX}	TCK Maximum Frequency	9.00	MHz
$t_{TRSTREM}$	ResetB Removal Time	1.18	ns
$t_{TRSTREC}$	ResetB Recovery Time	0.00	ns
$t_{TRSTMPW}$	ResetB Minimum Pulse	TBD	ns

Note: For specific junction temperature and voltage supply levels, refer to Table 2-6 on page 2-6 for derating values.

3 – Pin Descriptions and Packaging

Supply Pins

GND **Ground**

Ground supply voltage to the core, I/O outputs, and I/O logic.

GNDQ **Ground (quiet)**

Quiet ground supply voltage to input buffers of I/O banks. Within the package, the GNDQ plane is decoupled from the simultaneous switching noise originated from the output buffer ground domain. This minimizes the noise transfer within the package and improves input signal integrity. GNDQ must always be connected to GND on the board.

VCC **Core Supply Voltage**

Supply voltage to the FPGA core, nominally 1.5 V for IGLOO PLUS V5 devices, and 1.2 V or 1.5 V for IGLOO PLUS V2 devices. VCC is required for powering the JTAG state machine in addition to VJTAG. Even when a device is in bypass mode in a JTAG chain of interconnected devices, both VCC and VJTAG must remain powered to allow JTAG signals to pass through the device.

For IGLOO PLUS V2 devices, VCC can be switched dynamically from 1.2 V to 1.5 V or vice versa. This allows in-system programming (ISP) when VCC is at 1.5 V and the benefit of low power operation when VCC is at 1.2 V.

VCCIBx **I/O Supply Voltage**

Supply voltage to the bank's I/O output buffers and I/O logic. Bx is the I/O bank number. There are four I/O banks on low power flash devices plus a dedicated VJTAG bank. Each bank can have a separate VCCI connection. All I/Os in a bank will run off the same VCCIBx supply. VCCI can be 1.2 V, 1.5 V, 1.8 V, 2.5 V, or 3.3 V, nominal voltage. Unused I/O banks should have their corresponding VCCI pins tied to GND.

VMVx **I/O Supply Voltage (quiet)**

Quiet supply voltage to the input buffers of each I/O bank. *x* is the bank number. Within the package, the VMV plane biases the input stage of the I/Os in the I/O banks. This minimizes the noise transfer within the package and improves input signal integrity. Each bank must have at least one VMV connection, and no VMV should be left unconnected. All I/Os in a bank run off the same VMVx supply. VMV is used to provide a quiet supply voltage to the input buffers of each I/O bank. VMVx can be 1.2 V, 1.5 V, 1.8 V, 2.5 V, or 3.3 V, nominal voltage. Unused I/O banks should have their corresponding VMV pins tied to GND. VMV and VCCI should be at the same voltage within a given I/O bank. Used VMV pins must be connected to the corresponding VCCI pins of the same bank (i.e., VMV0 to VCCIB0, VMV1 to VCCIB1, etc.).

VCCPLA/B/C/D/E/F **PLL Supply Voltage**

Supply voltage to analog PLL, nominally 1.5 V or 1.2 V, depending on the device.

- 1.5 V for IGLOO PLUS V5 devices
- 1.2 V or 1.5 V for IGLOO PLUS V2 devices

When the PLLs are not used, the Microsemi Designer place-and-route tool automatically disables the unused PLLs to lower power consumption. The user should tie unused VCCPLx and VCOMPLx pins to ground. Microsemi recommends tying VCCPLx to VCC and using proper filtering circuits to decouple VCC noise from the PLLs. Refer to the PLL Power Supply Decoupling section of the "Clock Conditioning Circuits in Low Power Flash Devices and Mixed signal FPGAs " chapter of the *IGLOO PLUS FPGA Fabric User's Guide* for a complete board solution for the PLL analog power supply and ground.

There is one VCCPLF pin on IGLOO PLUS devices.

VCOMPLA/B/C/D/E/F PLL Ground

Ground to analog PLL power supplies. When the PLLs are not used, the Designer place-and-route tool automatically disables the unused PLLs to lower power consumption. The user should tie unused VCCPLx and VCOMPLx pins to ground.

There is one VCOMPLF pin on IGLOO PLUS devices.

VJTAG JTAG Supply Voltage

Low power flash devices have a separate bank for the dedicated JTAG pins. The JTAG pins can be run at any voltage from 1.5 V to 3.3 V (nominal). Isolating the JTAG power supply in a separate I/O bank gives greater flexibility in supply selection and simplifies power supply and PCB design. If the JTAG interface is neither used nor planned for use, the VJTAG pin together with the TRST pin could be tied to GND. It should be noted that VCC is required to be powered for JTAG operation; VJTAG alone is insufficient. If a device is in a JTAG chain of interconnected boards, the board containing the device can be powered down, provided both VJTAG and VCC to the part remain powered; otherwise, JTAG signals will not be able to transition the device, even in bypass mode.

Microsemi recommends that VPUMP and VJTAG power supplies be kept separate with independent filtering capacitors rather than supplying them from a common rail.

VPUMP Programming Supply Voltage

IGLOO PLUS devices support single-voltage ISP of the configuration flash and FlashROM. For programming, VPUMP should be 3.3 V nominal. During normal device operation, VPUMP can be left floating or can be tied (pulled up) to any voltage between 0 V and the VPUMP maximum. Programming power supply voltage (VPUMP) range is listed in the datasheet.

When the VPUMP pin is tied to ground, it will shut off the charge pump circuitry, resulting in no sources of oscillation from the charge pump circuitry.

For proper programming, 0.01 µF and 0.33 µF capacitors (both rated at 16 V) are to be connected in parallel across VPUMP and GND, and positioned as close to the FPGA pins as possible.

Microsemi recommends that VPUMP and VJTAG power supplies be kept separate with independent filtering capacitors rather than supplying them from a common rail.

User Pins

I/O User Input/Output

The I/O pin functions as an input, output, tristate, or bidirectional buffer. Input and output signal levels are compatible with the I/O standard selected.

During programming, I/Os become tristated and weakly pulled up to VCCI. With VCCI, VMV, and VCC supplies continuously powered up, when the device transitions from programming to operating mode, the I/Os are instantly configured to the desired user configuration.

Unused I/Os are configured as follows:

- Output buffer is disabled (with tristate value of high impedance)
- Input buffer is disabled (with tristate value of high impedance)
- Weak pull-up is programmed

GL Globals

GL I/Os have access to certain clock conditioning circuitry (and the PLL) and/or have direct access to the global network (spines). Additionally, the global I/Os can be used as regular I/Os, since they have identical capabilities. Unused GL pins are configured as inputs with pull-up resistors.

See more detailed descriptions of global I/O connectivity in the "Clock Conditioning Circuits in Low Power Flash Devices and Mixed Signal FPGAs" chapter of the *IGLOO PLUS FPGA Fabric User's Guide*. All inputs labeled GC/GF are direct inputs into the quadrant clocks. For example, if GAA0 is used for an input, GAA1 and GAA2 are no longer available for input to the quadrant globals. All inputs labeled GC/GF are direct inputs into the chip-level globals, and the rest are connected to the quadrant globals. The inputs to the global network are multiplexed, and only one input can be used as a global input.

Refer to the I/O Structure chapter of the *IGLOO PLUS FPGA Fabric User's Guide* for an explanation of the naming of global pins.

FF Flash*Freeze Mode Activation Pin

The FF pin is a dedicated input pin used to enter and exit Flash*Freeze mode. The FF pin is active low, has the same characteristics as a single-ended I/O, and must meet the maximum rise and fall times. When Flash*Freeze mode is not used in the design, the FF pin is available as a regular I/O.

When Flash*Freeze mode is used, the FF pin must not be left floating to avoid accidentally entering Flash*Freeze mode. While in Flash*Freeze mode, the Flash*Freeze pin should be constantly asserted.

The Flash*Freeze pin can be used with any single-ended I/O standard supported by the I/O bank in which the pin is located, and input signal levels compatible with the I/O standard selected. The FF pin should be treated as a sensitive asynchronous signal. When defining pin placement and board layout, simultaneously switching outputs (SSOs) and their effects on sensitive asynchronous pins must be considered.

Unused FF or I/O pins are tristated with weak pull-up. This default configuration applies to both Flash*Freeze mode and normal operation mode. No user intervention is required.

Table 3-1 shows the Flash*Freeze pin location on the available packages for IGLOO and ProASIC3L devices. The Flash*Freeze pin location is independent of device (except for a PQ208 package), allowing migration to larger or smaller IGLOO devices while maintaining the same pin location on the board. Refer to the "Flash*Freeze Technology and Low Power Modes" chapter of the *IGLOO PLUS Device Family User's Guide* for more information on I/O states during Flash*Freeze mode.

***Table 3-1* • Flash*Freeze Pin Location in IGLOO PLUS Devices**

Package	Flash*Freeze Pin
CS281	W2
CS201	R4
CS289	U1
VQ128	34
VQ176	47

JTAG Pins

Low power flash devices have a separate bank for the dedicated JTAG pins. The JTAG pins can be run at any voltage from 1.5 V to 3.3 V (nominal). VCC must also be powered for the JTAG state machine to operate, even if the device is in bypass mode; VJTAG alone is insufficient. Both VJTAG and VCC to the part must be supplied to allow JTAG signals to transition the device. Isolating the JTAG power supply in a separate I/O bank gives greater flexibility in supply selection and simplifies power supply and PCB design. If the JTAG interface is neither used nor planned for use, the VJTAG pin together with the TRST pin could be tied to GND.

TCK Test Clock

Test clock input for JTAG boundary scan, ISP, and UJTAG. The TCK pin does not have an internal pull-up/-down resistor. If JTAG is not used, Microsemi recommends tying off TCK to GND through a resistor placed close to the FPGA pin. This prevents JTAG operation in case TMS enters an undesired state.

Note that to operate at all VJTAG voltages, 500 Ω to 1 kΩ will satisfy the requirements. Refer to Table 3-2 for more information.

***Table 3-2* • Recommended Tie-Off Values for the TCK and TRST Pins**

VJTAG	Tie-Off Resistance
VJTAG at 3.3 V	200 Ω to 1 kΩ
VJTAG at 2.5 V	200 Ω to 1 kΩ
VJTAG at 1.8 V	500 Ω to 1 kΩ
VJTAG at 1.5 V	500 Ω to 1 kΩ

Notes:

1. *Equivalent parallel resistance if more than one device is on the JTAG chain*
2. *The TCK pin can be pulled up/down.*
3. *The TRST pin is pulled down.*

TDI Test Data Input

Serial input for JTAG boundary scan, ISP, and UJTAG usage. There is an internal weak pull-up resistor on the TDI pin.

TDO Test Data Output

Serial output for JTAG boundary scan, ISP, and UJTAG usage.

TMS Test Mode Select

The TMS pin controls the use of the IEEE 1532 boundary scan pins (TCK, TDI, TDO, TRST). There is an internal weak pull-up resistor on the TMS pin.

TRST Boundary Scan Reset Pin

The TRST pin functions as an active-low input to asynchronously initialize (or reset) the boundary scan circuitry. There is an internal weak pull-up resistor on the TRST pin. If JTAG is not used, an external pull-down resistor could be included to ensure the test access port (TAP) is held in reset mode. The resistor values must be chosen from Table 3-2 and must satisfy the parallel resistance value requirement. The values in Table 3-2 correspond to the resistor recommended when a single device is used, and the equivalent parallel resistor when multiple devices are connected via a JTAG chain.

In critical applications, an upset in the JTAG circuit could allow entrance to an undesired JTAG state. In such cases, Microsemi recommends tying off TRST to GND through a resistor placed close to the FPGA pin.

Note that to operate at all VJTAG voltages, 500 Ω to 1 kΩ will satisfy the requirements.

Special Function Pins

NC **No Connect**

This pin is not connected to circuitry within the device. These pins can be driven to any voltage or can be left floating with no effect on the operation of the device.

DC **Do Not Connect**

This pin should not be connected to any signals on the PCB. These pins should be left unconnected.

Packaging

Semiconductor technology is constantly shrinking in size while growing in capability and functional integration. To enable next-generation silicon technologies, semiconductor packages have also evolved to provide improved performance and flexibility.

Microsemi consistently delivers packages that provide the necessary mechanical and environmental protection to ensure consistent reliability and performance. Microsemi IC packaging technology efficiently supports high-density FPGAs with large-pin-count Ball Grid Arrays (BGAs), but is also flexible enough to accommodate stringent form factor requirements for Chip Scale Packaging (CSP). In addition, Microsemi offers a variety of packages designed to meet your most demanding application and economic requirements for today's embedded and mobile systems.

Related Documents

IGLOO PLUS Device Family User's Guide

http://www.microsemi.com/soc/documents/IGLOOPLUS_UG.pdf

The following documents provide packaging information and device selection for low power flash devices.

Product Catalog

http://www.microsemi.com/soc/documents/ProdCat_PIB.pdf

Lists devices currently recommended for new designs and the packages available for each member of the family. Use this document or the datasheet tables to determine the best package for your design, and which package drawing to use.

Package Mechanical Drawings

http://www.microsemi.com/soc/documents/PckgMechDrwngs.pdf

This document contains the package mechanical drawings for all packages currently or previously supplied by Microsemi. Use the bookmarks to navigate to the package mechanical drawings.

Additional packaging materials are available at
http://www.microsemi.com/soc/products/solutions/package/docs.aspx.

4 – Package Pin Assignments

VQ128

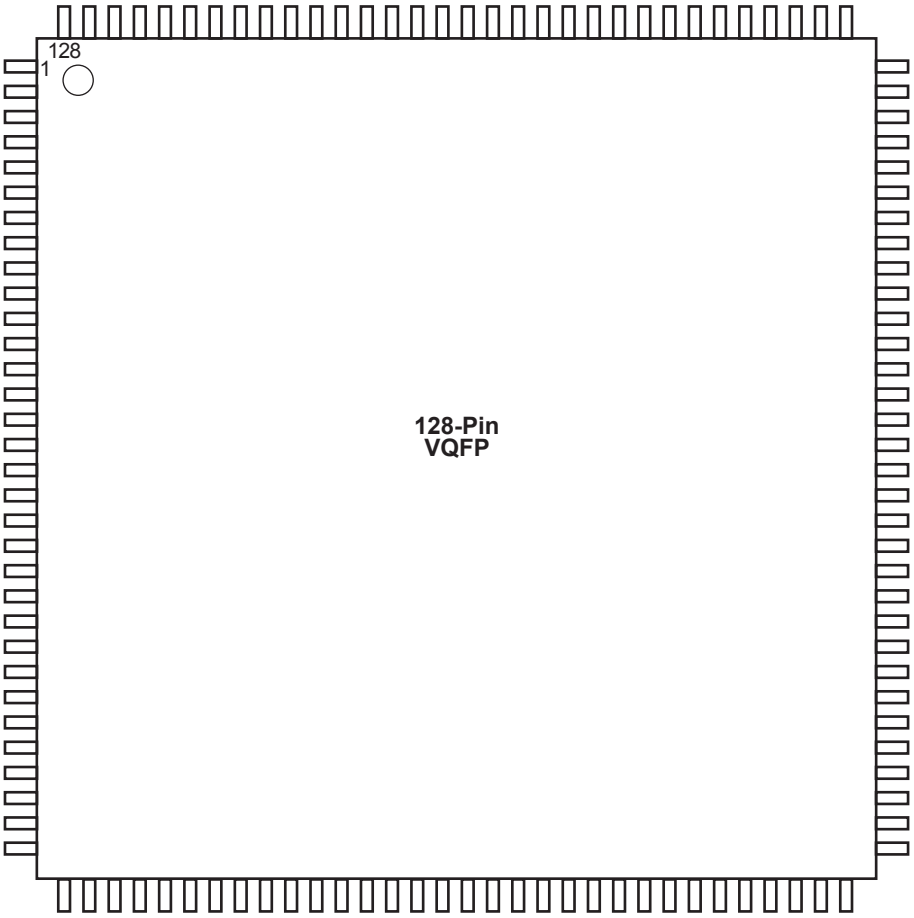

Note: This is the top view of the package.

Note

For Package Manufacturing and Environmental information, visit the Resource Center at http://www.microsemi.com/soc/products/solutions/package/docs.aspx.

Pin information is in the "Pin Descriptions" chapter of the *IGLOO PLUS FPGA Fabric User's Guide*.

VQ128		VQ128		VQ128	
Pin Number	AGLP030 Function	Pin Number	AGLP030 Function	Pin Number	AGLP030 Function
1	IO119RSB3	36	IO88RSB2	71	IO57RSB1
2	IO118RSB3	37	IO86RSB2	72	VCCIB1
3	IO117RSB3	38	IO84RSB2	73	GND
4	IO115RSB3	39	IO83RSB2	74	IO55RSB1
5	IO116RSB3	40	GND	75	IO54RSB1
6	IO113RSB3	41	VCCIB2	76	IO53RSB1
7	IO114RSB3	42	IO82RSB2	77	IO52RSB1
8	GND	43	IO81RSB2	78	IO51RSB1
9	VCCIB3	44	IO79RSB2	79	IO50RSB1
10	IO112RSB3	45	IO78RSB2	80	IO49RSB1
11	IO111RSB3	46	IO77RSB2	81	VCC
12	IO110RSB3	47	IO75RSB2	82	GDB0/IO48RSB1
13	IO109RSB3	48	IO74RSB2	83	GDA0/IO47RSB1
14	GEC0/IO108RSB3	49	VCC	84	GDC0/IO46RSB1
15	GEA0/IO107RSB3	50	IO73RSB2	85	IO45RSB1
16	GEB0/IO106RSB3	51	IO72RSB2	86	IO44RSB1
17	VCC	52	IO70RSB2	87	IO43RSB1
18	IO104RSB3	53	IO69RSB2	88	IO42RSB1
19	IO103RSB3	54	IO68RSB2	89	VCCIB1
20	IO102RSB3	55	IO66RSB2	90	GND
21	IO101RSB3	56	IO65RSB2	91	IO40RSB1
22	IO100RSB3	57	GND	92	IO41RSB1
23	IO99RSB3	58	VCCIB2	93	IO39RSB1
24	GND	59	IO63RSB2	94	IO38RSB1
25	VCCIB3	60	IO61RSB2	95	IO37RSB1
26	IO97RSB3	61	IO59RSB2	96	IO36RSB1
27	IO98RSB3	62	TCK	97	IO35RSB0
28	IO95RSB3	63	TDI	98	IO34RSB0
29	IO96RSB3	64	TMS	99	IO33RSB0
30	IO94RSB3	65	VPUMP	100	IO32RSB0
31	IO93RSB3	66	TDO	101	IO30RSB0
32	IO92RSB3	67	TRST	102	IO28RSB0
33	IO91RSB2	68	IO58RSB1	103	IO27RSB0
34	FF/IO90RSB2	69	VJTAG	104	VCCIB0
35	IO89RSB2	70	IO56RSB1	105	GND

VQ128	
Pin Number	**AGLP030 Function**
106	IO26RSB0
107	IO25RSB0
108	IO23RSB0
109	IO22RSB0
110	IO21RSB0
111	IO19RSB0
112	IO18RSB0
113	VCC
114	IO17RSB0
115	IO16RSB0
116	IO14RSB0
117	IO13RSB0
118	IO12RSB0
119	IO10RSB0
120	IO09RSB0
121	VCCIB0
122	GND
123	IO07RSB0
124	IO05RSB0
125	IO03RSB0
126	IO02RSB0
127	IO01RSB0
128	IO00RSB0

VQ176

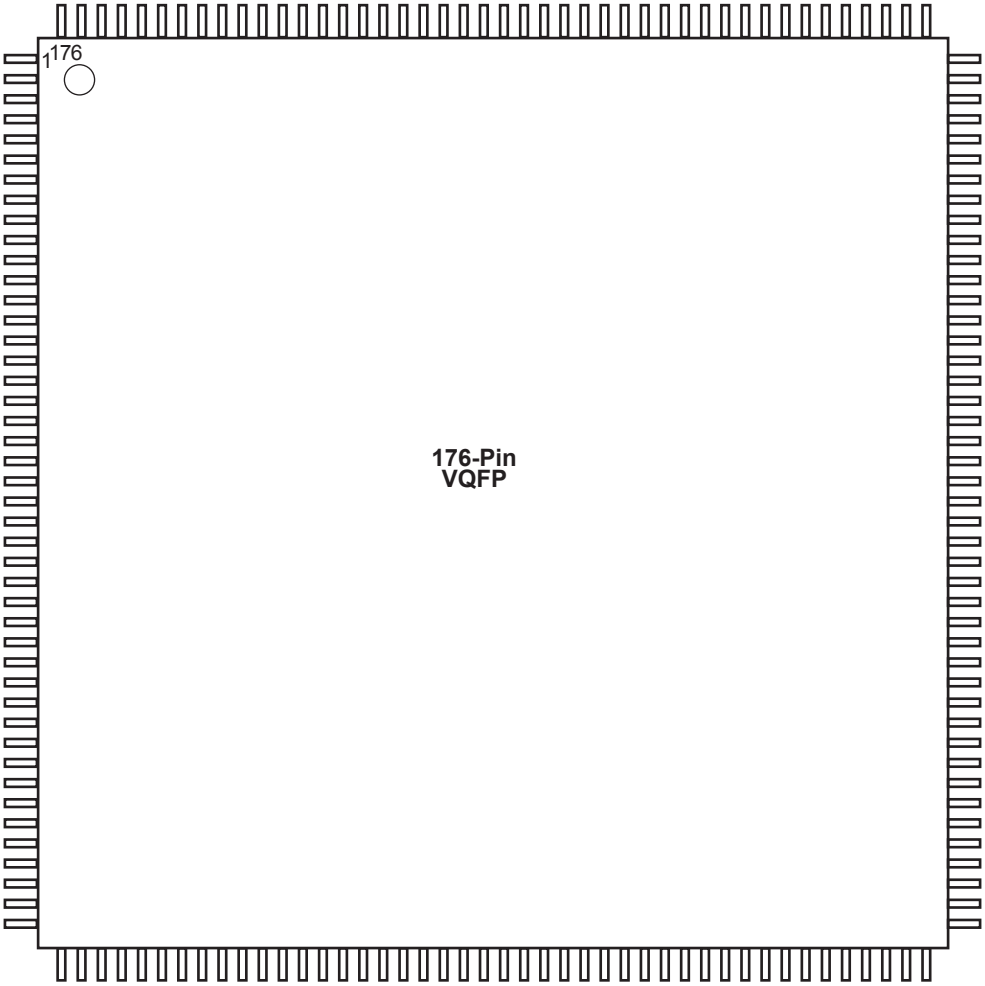

Note: This is the bottom view of the package.

Note

For Package Manufacturing and Environmental information, visit the Resource Center at http://www.microsemi.com/soc/products/solutions/package/docs.aspx.

VQ176	
Pin Number	AGLP060 Function
1	GAA2/IO156RSB3
2	IO155RSB3
3	GAB2/IO154RSB3
4	IO153RSB3
5	GAC2/IO152RSB3
6	GND
7	VCCIB3
8	IO149RSB3
9	IO147RSB3
10	IO145RSB3
11	IO144RSB3
12	IO143RSB3
13	VCC
14	IO141RSB3
15	GFC1/IO140RSB3
16	GFB1/IO138RSB3
17	GFB0/IO137RSB3
18	VCOMPLF
19	GFA1/IO136RSB3
20	VCCPLF
21	GFA0/IO135RSB3
22	GND
23	VCCIB3
24	GFA2/IO134RSB3
25	GFB2/IO133RSB3
26	GFC2/IO132RSB3
27	IO131RSB3
28	IO130RSB3
29	IO129RSB3
30	IO127RSB3
31	IO126RSB3
32	IO125RSB3
33	IO123RSB3
34	IO122RSB3
35	IO121RSB3

VQ176	
Pin Number	AGLP060 Function
36	IO119RSB3
37	GND
38	VCCIB3
39	GEC1/IO116RSB3
40	GEB1/IO114RSB3
41	GEC0/IO115RSB3
42	GEB0/IO113RSB3
43	GEA1/IO112RSB3
44	GEA0/IO111RSB3
45	GEA2/IO110RSB2
46	NC
47	FF/GEB2/IO109RSB2
48	GEC2/IO108RSB2
49	IO106RSB2
50	IO107RSB2
51	IO104RSB2
52	IO105RSB2
53	IO102RSB2
54	IO103RSB2
55	GND
56	VCCIB2
57	IO101RSB2
58	IO100RSB2
59	IO99RSB2
60	IO98RSB2
61	IO97RSB2
62	IO96RSB2
63	IO95RSB2
64	IO94RSB2
65	IO93RSB2
66	VCC
67	IO92RSB2
68	IO91RSB2
69	IO90RSB2

VQ176	
Pin Number	AGLP060 Function
70	IO89RSB2
71	IO88RSB2
72	IO87RSB2
73	IO86RSB2
74	IO85RSB2
75	IO84RSB2
76	GND
77	VCCIB2
78	IO83RSB2
79	IO82RSB2
80	GDC2/IO80RSB2
81	IO81RSB2
82	GDA2/IO78RSB2
83	GDB2/IO79RSB2
84	NC
85	NC
86	TCK
87	TDI
88	TMS
89	VPUMP
90	TDO
91	TRST
92	VJTAG
93	GDA1/IO76RSB1
94	GDC0/IO73RSB1
95	GDB1/IO74RSB1
96	GDC1/IO72RSB1
97	VCCIB1
98	GND
99	IO70RSB1
100	IO69RSB1
101	IO67RSB1
102	IO66RSB1
103	IO65RSB1
104	IO63RSB1

VQ176	
Pin Number	AGLP060 Function
105	IO62RSB1
106	IO61RSB1
107	GCC2/IO60RSB1
108	GCB2/IO59RSB1
109	GCA2/IO58RSB1
110	GCA0/IO57RSB1
111	GCA1/IO56RSB1
112	VCCIB1
113	GND
114	GCB0/IO55RSB1
115	GCB1/IO54RSB1
116	GCC0/IO53RSB1
117	GCC1/IO52RSB1
118	IO51RSB1
119	IO50RSB1
120	VCC
121	IO48RSB1
122	IO47RSB1
123	IO45RSB1
124	IO44RSB1
125	IO43RSB1
126	VCCIB1
127	GND
128	GBC2/IO40RSB1
129	IO39RSB1
130	GBB2/IO38RSB1
131	IO37RSB1
132	GBA2/IO36RSB1
133	GBA1/IO35RSB0
134	NC
135	GBA0/IO34RSB0
136	NC
137	GBB1/IO33RSB0
138	NC
139	GBC1/IO31RSB0

VQ176	
Pin Number	AGLP060 Function
140	GBB0/IO32RSB0
141	GBC0/IO30RSB0
142	IO29RSB0
143	IO28RSB0
144	IO27RSB0
145	VCCIB0
146	GND
147	IO26RSB0
148	IO25RSB0
149	IO24RSB0
150	IO23RSB0
151	IO22RSB0
152	IO21RSB0
153	IO20RSB0
154	IO19RSB0
155	IO18RSB0
156	VCC
157	IO17RSB0
158	IO16RSB0
159	IO15RSB0
160	IO14RSB0
161	IO13RSB0
162	IO12RSB0
163	IO11RSB0
164	IO10RSB0
165	IO09RSB0
166	VCCIB0
167	GND
168	IO07RSB0
169	IO08RSB0
170	GAC1/IO05RSB0
171	IO06RSB0
172	GAB1/IO03RSB0
173	GAC0/IO04RSB0
174	GAB0/IO02RSB0

VQ176	
Pin Number	AGLP060 Function
175	GAA1/IO01RSB0
176	GAA0/IO00RSB0

CS201

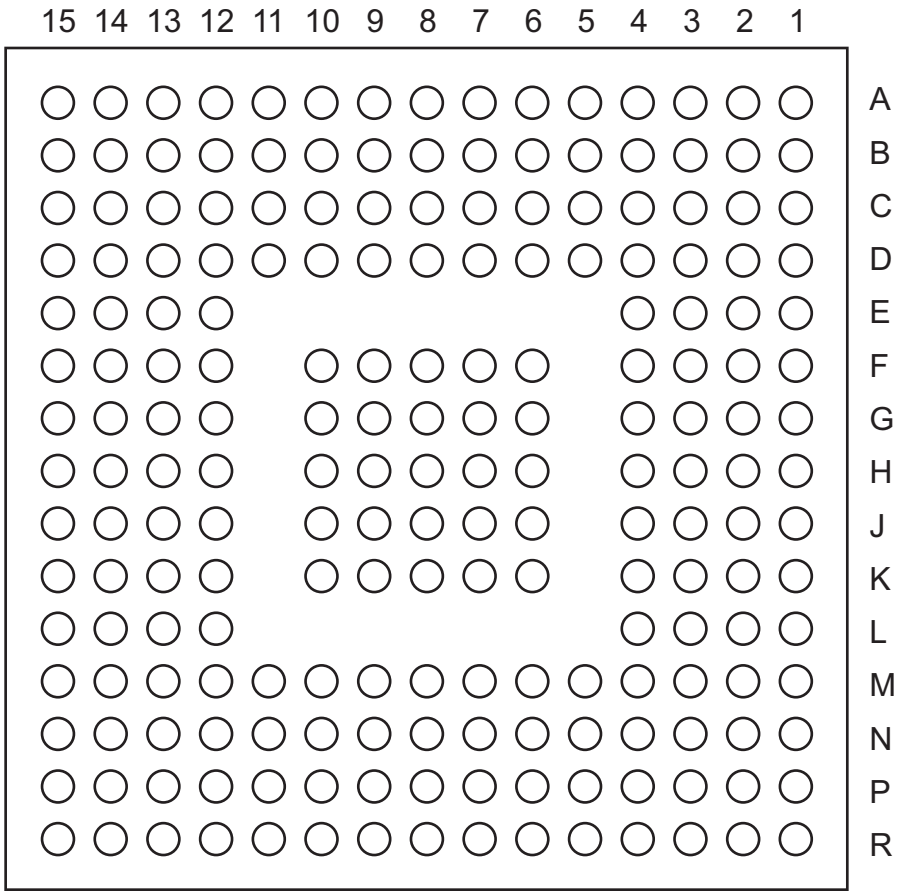

Note: This is the bottom view of the package.

Note

For Package Manufacturing and Environmental information, visit the Resource Center at http://www.microsemi.com/soc/products/solutions/package/docs.aspx.

CS201	
Pin Number	AGLP030 Function
A1	NC
A2	IO04RSB0
A3	IO06RSB0
A4	IO09RSB0
A5	IO11RSB0
A6	IO13RSB0
A7	IO17RSB0
A8	IO18RSB0
A9	IO24RSB0
A10	IO26RSB0
A11	IO27RSB0
A12	IO31RSB0
A13	NC
A14	NC
A15	NC
B1	NC
B2	NC
B3	IO08RSB0
B4	IO05RSB0
B5	IO07RSB0
B6	IO15RSB0
B7	IO14RSB0
B8	IO16RSB0
B9	IO20RSB0
B10	IO22RSB0
B11	IO34RSB0
B12	IO29RSB0
B13	NC
B14	NC
B15	NC
C1	NC
C2	NC
C3	GND
C4	IO00RSB0
C5	IO02RSB0

CS201	
Pin Number	AGLP030 Function
C6	IO12RSB0
C7	IO23RSB0
C8	IO19RSB0
C9	IO28RSB0
C10	IO32RSB0
C11	IO35RSB0
C12	NC
C13	GND
C14	IO41RSB1
C15	IO37RSB1
D1	IO117RSB3
D2	IO118RSB3
D3	NC
D4	GND
D5	IO01RSB0
D6	IO03RSB0
D7	IO10RSB0
D8	IO21RSB0
D9	IO25RSB0
D10	IO30RSB0
D11	IO33RSB0
D12	GND
D13	NC
D14	IO36RSB1
D15	IO39RSB1
E1	IO115RSB3
E2	IO114RSB3
E3	NC
E4	NC
E12	NC
E13	NC
E14	GDC0/IO46RSB1
E15	GDB0/IO48RSB1
F1	IO113RSB3
F2	IO116RSB3

CS201	
Pin Number	AGLP030 Function
F3	IO119RSB3
F4	IO111RSB3
F6	GND
F7	VCC
F8	VCCIB0
F9	VCCIB0
F10	VCCIB0
F12	NC
F13	NC
F14	IO40RSB1
F15	IO38RSB1
G1	NC
G2	IO112RSB3
G3	IO110RSB3
G4	IO109RSB3
G6	VCCIB3
G7	GND
G8	VCC
G9	GND
G10	GND
G12	NC
G13	NC
G14	IO42RSB1
G15	IO44RSB1
H1	NC
H2	GEB0/IO106RSB3
H3	GEC0/IO108RSB3
H4	NC
H6	VCCIB3
H7	GND
H8	VCC
H9	GND
H10	VCCIB1
H12	IO54RSB1
H13	GDA0/IO47RSB1

CS201	
Pin Number	AGLP030 Function
H14	IO45RSB1
H15	IO43RSB1
J1	GEA0/IO107RSB3
J2	IO105RSB3
J3	IO104RSB3
J4	IO102RSB3
J6	VCCIB3
J7	GND
J8	VCC
J9	GND
J10	VCCIB1
J12	NC
J13	NC
J14	IO52RSB1
J15	IO50RSB1
K1	IO103RSB3
K2	IO101RSB3
K3	IO99RSB3
K4	IO100RSB3
K6	GND
K7	VCCIB2
K8	VCCIB2
K9	VCCIB2
K10	VCCIB1
K12	NC
K13	IO57RSB1
K14	IO49RSB1
K15	IO53RSB1
L1	IO96RSB3
L2	IO98RSB3
L3	IO95RSB3
L4	IO94RSB3
L12	NC
L13	NC
L14	IO51RSB1

CS201	
Pin Number	AGLP030 Function
L15	IO58RSB1
M1	IO93RSB3
M2	IO92RSB3
M3	IO97RSB3
M4	GND
M5	NC
M6	IO79RSB2
M7	IO77RSB2
M8	IO72RSB2
M9	IO70RSB2
M10	IO61RSB2
M11	IO59RSB2
M12	GND
M13	NC
M14	IO55RSB1
M15	IO56RSB1
N1	NC
N2	NC
N3	GND
N4	NC
N5	IO88RSB2
N6	IO81RSB2
N7	IO75RSB2
N8	IO68RSB2
N9	IO66RSB2
N10	IO65RSB2
N11	IO71RSB2
N12	IO63RSB2
N13	GND
N14	TDO
N15	VJTAG
P1	NC
P2	NC
P3	NC
P4	NC

CS201	
Pin Number	AGLP030 Function
P5	IO87RSB2
P6	IO86RSB2
P7	IO84RSB2
P8	IO80RSB2
P9	IO74RSB2
P10	IO73RSB2
P11	IO76RSB2
P12	IO67RSB2
P13	IO64RSB2
P14	VPUMP
P15	TRST
R1	NC
R2	NC
R3	IO91RSB2
R4	FF/IO90RSB2
R5	IO89RSB2
R6	IO83RSB2
R7	IO82RSB2
R8	IO85RSB2
R9	IO78RSB2
R10	IO69RSB2
R11	IO62RSB2
R12	IO60RSB2
R13	TMS
R14	TDI
R15	TCK

CS201	
Pin Number	AGLP060 Function
A1	IO150RSB3
A2	GAA0/IO00RSB0
A3	GAC0/IO04RSB0
A4	IO08RSB0
A5	IO11RSB0
A6	IO15RSB0
A7	IO17RSB0
A8	IO18RSB0
A9	IO22RSB0
A10	IO26RSB0
A11	IO29RSB0
A12	GBC1/IO31RSB0
A13	GBA2/IO36RSB1
A14	IO41RSB1
A15	NC
B1	IO151RSB3
B2	GAB2/IO154RSB3
B3	IO06RSB0
B4	IO09RSB0
B5	IO13RSB0
B6	IO10RSB0
B7	IO12RSB0
B8	IO20RSB0
B9	IO23RSB0
B10	IO25RSB0
B11	IO24RSB0
B12	IO27RSB0
B13	IO37RSB1
B14	IO46RSB1
B15	IO42RSB1
C1	IO155RSB3
C2	GAA2/IO156RSB3
C3	GND
C4	GAA1/IO01RSB0
C5	GAB1/IO03RSB0

CS201	
Pin Number	AGLP060 Function
C6	IO07RSB0
C7	IO16RSB0
C8	IO21RSB0
C9	IO28RSB0
C10	GBB1/IO33RSB0
C11	GBA1/IO35RSB0
C12	GBB2/IO38RSB1
C13	GND
C14	IO48RSB1
C15	IO39RSB1
D1	IO146RSB3
D2	IO144RSB3
D3	IO148RSB3
D4	GND
D5	GAB0/IO02RSB0
D6	GAC1/IO05RSB0
D7	IO14RSB0
D8	IO19RSB0
D9	GBC0/IO30RSB0
D10	GBB0/IO32RSB0
D11	GBA0/IO34RSB0
D12	GND
D13	GBC2/IO40RSB1
D14	IO51RSB1
D15	IO44RSB1
E1	IO142RSB3
E2	IO149RSB3
E3	IO153RSB3
E4	GAC2/IO152RSB3
E12	IO43RSB1
E13	IO49RSB1
E14	GCC0/IO53RSB1
E15	GCB0/IO55RSB1
F1	IO141RSB3
F2	GFC1/IO140RSB3

CS201	
Pin Number	AGLP060 Function
F3	IO145RSB3
F4	IO147RSB3
F6	GND
F7	VCC
F8	VCCIB0
F9	VCCIB0
F10	VCCIB0
F12	IO47RSB1
F13	IO45RSB1
F14	GCC1/IO52RSB1
F15	GCA1/IO56RSB1
G1*	VCOMPLF
G2	GFB0/IO137RSB3
G3	GFC0/IO139RSB3
G4	IO143RSB3
G6	VCCIB3
G7	GND
G8	VCC
G9	GND
G10	GND
G12	IO50RSB1
G13	GCB1/IO54RSB1
G14	GCC2/IO60RSB1
G15	GCA2/IO58RSB1
H1*	VCCPLF
H2	GFA1/IO136RSB3
H3	GFB1/IO138RSB3
H4	NC
H6	VCCIB3
H7	GND
H8	VCC
H9	GND
H10	VCCIB1
H12	GCB2/IO59RSB1
H13	GCA0/IO57RSB1

*Note: *Pin numbers G1 and H1 must be connected to ground because a PLL is not supported for AGLP060-CS/G201.*

CS201	
Pin Number	AGLP060 Function
H14	IO64RSB1
H15	IO62RSB1
J1	GFA2/IO134RSB3
J2	GFA0/IO135RSB3
J3	GFB2/IO133RSB3
J4	IO131RSB3
J6	VCCIB3
J7	GND
J8	VCC
J9	GND
J10	VCCIB1
J12	IO61RSB1
J13	IO63RSB1
J14	IO68RSB1
J15	IO66RSB1
K1	IO130RSB3
K2	GFC2/IO132RSB3
K3	IO127RSB3
K4	IO129RSB3
K6	GND
K7	VCCIB2
K8	VCCIB2
K9	VCCIB2
K10	VCCIB1
K12	IO65RSB1
K13	IO67RSB1
K14	IO69RSB1
K15	IO70RSB1
L1	IO126RSB3
L2	IO128RSB3
L3	IO121RSB3
L4	IO123RSB3
L12	GDB1/IO74RSB1
L13	GDC1/IO72RSB1
L14	IO71RSB1

CS201	
Pin Number	AGLP060 Function
L15	GDC0/IO73RSB1
M1	IO122RSB3
M2	IO124RSB3
M3	IO119RSB3
M4	GND
M5	IO125RSB3
M6	IO98RSB2
M7	IO96RSB2
M8	IO91RSB2
M9	IO89RSB2
M10	IO82RSB2
M11	GDA2/IO78RSB2
M12	GND
M13	GDA1/IO76RSB1
M14	GDA0/IO77RSB1
M15	GDB0/IO75RSB1
N1	IO117RSB3
N2	IO120RSB3
N3	GND
N4	GEB1/IO114RSB3
N5	IO107RSB2
N6	IO100RSB2
N7	IO94RSB2
N8	IO87RSB2
N9	IO85RSB2
N10	GDC2/IO80RSB2
N11	IO90RSB2
N12	IO84RSB2
N13	GND
N14	TDO
N15	VJTAG
P1	GEC0/IO115RSB3
P2	GEC1/IO116RSB3
P3	GEA0/IO111RSB3
P4	GEA1/IO112RSB3

CS201	
Pin Number	AGLP060 Function
P5	IO106RSB2
P6	IO105RSB2
P7	IO103RSB2
P8	IO99RSB2
P9	IO93RSB2
P10	IO92RSB2
P11	IO95RSB2
P12	IO86RSB2
P13	IO83RSB2
P14	VPUMP
P15	TRST
R1	IO118RSB3
R2	GEB0/IO113RSB3
R3	GEA2/IO110RSB2
R4	FF/GEB2/IO109RSB2
R5	GEC2/IO108RSB2
R6	IO102RSB2
R7	IO101RSB2
R8	IO104RSB2
R9	IO97RSB2
R10	IO88RSB2
R11	IO81RSB2
R12	GDB2/IO79RSB2
R13	TMS
R14	TDI
R15	TCK

CS281

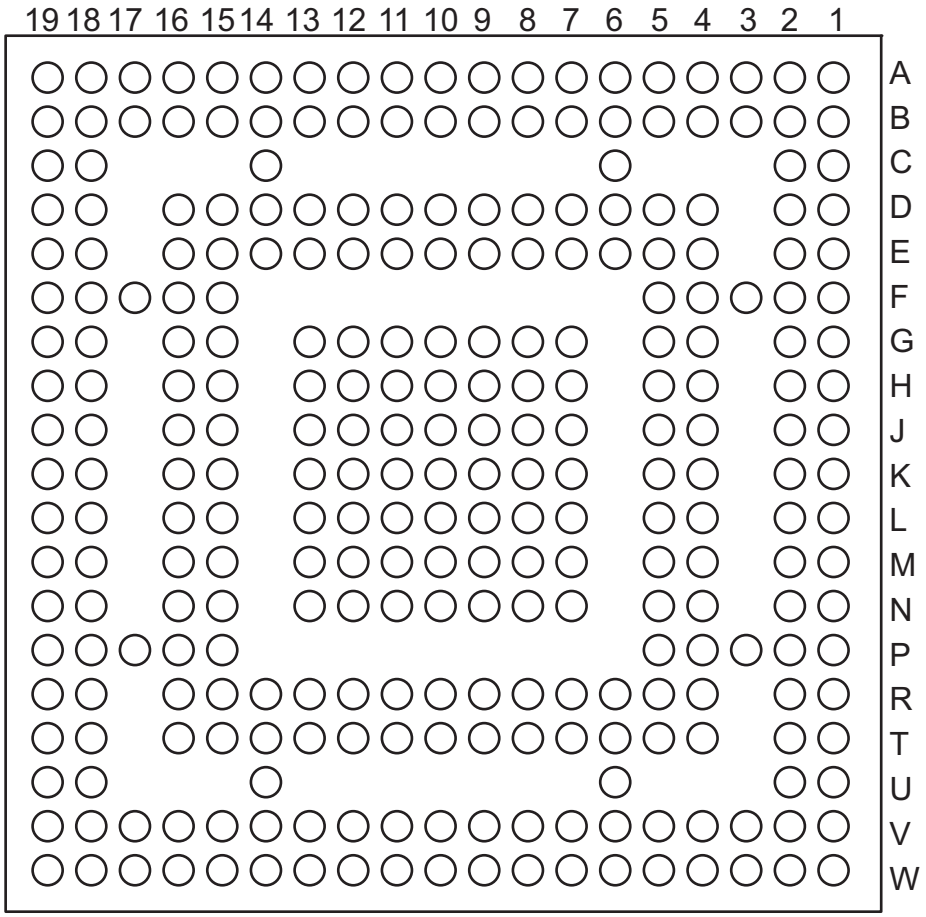

Note: This is the bottom view of the package.

Note

For Package Manufacturing and Environmental information, visit the Resource Center at http://www.microsemi.com/soc/products/solutions/package/docs.aspx

CS281	
Pin Number	AGLP125 Function
A1	GND
A2	GAB0/IO02RSB0
A3	GAC1/IO05RSB0
A4	IO09RSB0
A5	IO13RSB0
A6	IO15RSB0
A7	IO18RSB0
A8	IO23RSB0
A9	IO25RSB0
A10	VCCIB0
A11	IO33RSB0
A12	IO41RSB0
A13	IO43RSB0
A14	IO46RSB0
A15	IO55RSB0
A16	IO56RSB0
A17	GBC1/IO58RSB0
A18	GBA0/IO61RSB0
A19	GND
B1	GAA2/IO211RSB3
B2	VCCIB0
B3	GAB1/IO03RSB0
B4	GAC0/IO04RSB0
B5	IO11RSB0
B6	GND
B7	IO21RSB0
B8	IO22RSB0
B9	IO28RSB0
B10	IO32RSB0
B11	IO36RSB0
B12	IO39RSB0
B13	IO42RSB0
B14	GND
B15	IO52RSB0
B16	GBC0/IO57RSB0
B17	GBA1/IO62RSB0

CS281	
Pin Number	AGLP125 Function
B18	VCCIB1
B19	IO64RSB1
C1	GAB2/IO209RSB3
C2	IO210RSB3
C6	IO12RSB0
C14	IO47RSB0
C18	IO54RSB0
C19	GBB2/IO65RSB1
D1	IO206RSB3
D2	IO208RSB3
D4	GAA0/IO00RSB0
D5	GAA1/IO01RSB0
D6	IO10RSB0
D7	IO17RSB0
D8	IO24RSB0
D9	IO27RSB0
D10	GND
D11	IO31RSB0
D12	IO40RSB0
D13	IO49RSB0
D14	IO45RSB0
D15	GBB0/IO59RSB0
D16	GBA2/IO63RSB1
D18	GBC2/IO67RSB1
D19	IO66RSB1
E1	IO203RSB3
E2	IO205RSB3
E4	IO07RSB0
E5	IO06RSB0
E6	IO14RSB0
E7	IO20RSB0
E8	IO29RSB0
E9	IO34RSB0
E10	IO30RSB0
E11	IO37RSB0
E12	IO38RSB0

CS281	
Pin Number	AGLP125 Function
E13	IO48RSB0
E14	GBB1/IO60RSB0
E15	IO53RSB0
E16	IO69RSB1
E18	IO68RSB1
E19	IO71RSB1
F1	IO198RSB3
F2	GND
F3	IO201RSB3
F4	IO204RSB3
F5	IO16RSB0
F15	IO50RSB0
F16	IO74RSB1
F17	IO72RSB1
F18	GND
F19	IO73RSB1
G1	IO195RSB3
G2	IO200RSB3
G4	IO202RSB3
G5	IO08RSB0
G7	GAC2/IO207RSB3
G8	VCCIB0
G9	IO26RSB0
G10	IO35RSB0
G11	IO44RSB0
G12	VCCIB0
G13	IO51RSB0
G15	IO70RSB1
G16	IO75RSB1
G18	GCC0/IO80RSB1
G19	GCB1/IO81RSB1
H1	GFB0/IO191RSB3
H2	IO196RSB3
H4	GFC1/IO194RSB3
H5	GFB1/IO192RSB3
H7	VCCIB3

CS281	
Pin Number	AGLP125 Function
H8	VCC
H9	VCCIB0
H10	VCC
H11	VCCIB0
H12	VCC
H13	VCCIB1
H15	IO77RSB1
H16	GCB0/IO82RSB1
H18	GCA1/IO83RSB1
H19	GCA2/IO85RSB1
J1	VCOMPLF
J2	GFA0/IO189RSB3
J4	VCCPLF
J5	GFC0/IO193RSB3
J7	GFA2/IO188RSB3
J8	VCCIB3
J9	GND
J10	GND
J11	GND
J12	VCCIB1
J13	GCC1/IO79RSB1
J15	GCA0/IO84RSB1
J16	GCB2/IO86RSB1
J18	IO76RSB1
J19	IO78RSB1
K1	VCCIB3
K2	GFA1/IO190RSB3
K4	GND
K5	IO19RSB0
K7	IO197RSB3
K8	VCC
K9	GND
K10	GND
K11	GND
K12	VCC
K13	GCC2/IO87RSB1

CS281	
Pin Number	AGLP125 Function
K15	IO89RSB1
K16	GND
K18	IO88RSB1
K19	VCCIB1
L1	GFB2/IO187RSB3
L2	IO185RSB3
L4	GFC2/IO186RSB3
L5	IO184RSB3
L7	IO199RSB3
L8	VCCIB3
L9	GND
L10	GND
L11	GND
L12	VCCIB1
L13	IO95RSB1
L15	IO91RSB1
L16	NC
L18	IO90RSB1
L19	NC
M1	IO180RSB3
M2	IO179RSB3
M4	IO181RSB3
M5	IO183RSB3
M7	VCCIB3
M8	VCC
M9	VCCIB2
M10	VCC
M11	VCCIB2
M12	VCC
M13	VCCIB1
M15	IO122RSB2
M16	IO93RSB1
M18	IO92RSB1
M19	NC
N1	IO178RSB3
N2	IO175RSB3

CS281	
Pin Number	AGLP125 Function
N4	IO182RSB3
N5	IO161RSB2
N7	GEA2/IO164RSB2
N8	VCCIB2
N9	IO137RSB2
N10	IO135RSB2
N11	IO131RSB2
N12	VCCIB2
N13	VPUMP
N15	IO117RSB2
N16	IO96RSB1
N18	IO98RSB1
N19	IO94RSB1
P1	IO174RSB3
P2	GND
P3	IO176RSB3
P4	IO177RSB3
P5	GEA0/IO165RSB3
P15	IO111RSB2
P16	IO108RSB2
P17	GDC1/IO99RSB1
P18	GND
P19	IO97RSB1
R1	IO173RSB3
R2	IO172RSB3
R4	GEC1/IO170RSB3
R5	GEB1/IO168RSB3
R6	IO154RSB2
R7	IO149RSB2
R8	IO146RSB2
R9	IO138RSB2
R10	IO134RSB2
R11	IO132RSB2
R12	IO130RSB2
R13	IO118RSB2
R14	IO112RSB2

CS281	
Pin Number	**AGLP125 Function**
R15	IO109RSB2
R16	GDA1/IO103RSB1
R18	GDB0/IO102RSB1
R19	GDC0/IO100RSB1
T1	IO171RSB3
T2	GEC0/IO169RSB3
T4	GEB0/IO167RSB3
T5	IO157RSB2
T6	IO158RSB2
T7	IO148RSB2
T8	IO145RSB2
T9	IO143RSB2
T10	GND
T11	IO129RSB2
T12	IO126RSB2
T13	IO125RSB2
T14	IO116RSB2
T15	GDC2/IO107RSB2
T16	TMS
T18	VJTAG
T19	GDB1/IO101RSB1
U1	IO160RSB2
U2	GEA1/IO166RSB3
U6	IO151RSB2
U14	IO121RSB2
U18	TRST
U19	GDA0/IO104RSB1
V1	IO159RSB2
V2	VCCIB3
V3	GEC2/IO162RSB2
V4	IO156RSB2
V5	IO153RSB2
V6	GND
V7	IO144RSB2
V8	IO141RSB2
V9	IO140RSB2

CS281	
Pin Number	**AGLP125 Function**
V10	IO133RSB2
V11	IO127RSB2
V12	IO123RSB2
V13	IO120RSB2
V14	GND
V15	IO113RSB2
V16	GDA2/IO105RSB2
V17	TDI
V18	VCCIB2
V19	TDO
W1	GND
W2	FF/GEB2/IO163RSB2
W3	IO155RSB2
W4	IO152RSB2
W5	IO150RSB2
W6	IO147RSB2
W7	IO142RSB2
W8	IO139RSB2
W9	IO136RSB2
W10	VCCIB2
W11	IO128RSB2
W12	IO124RSB2
W13	IO119RSB2
W14	IO115RSB2
W15	IO114RSB2
W16	IO110RSB2
W17	GDB2/IO106RSB2
W18	TCK
W19	GND

CS289

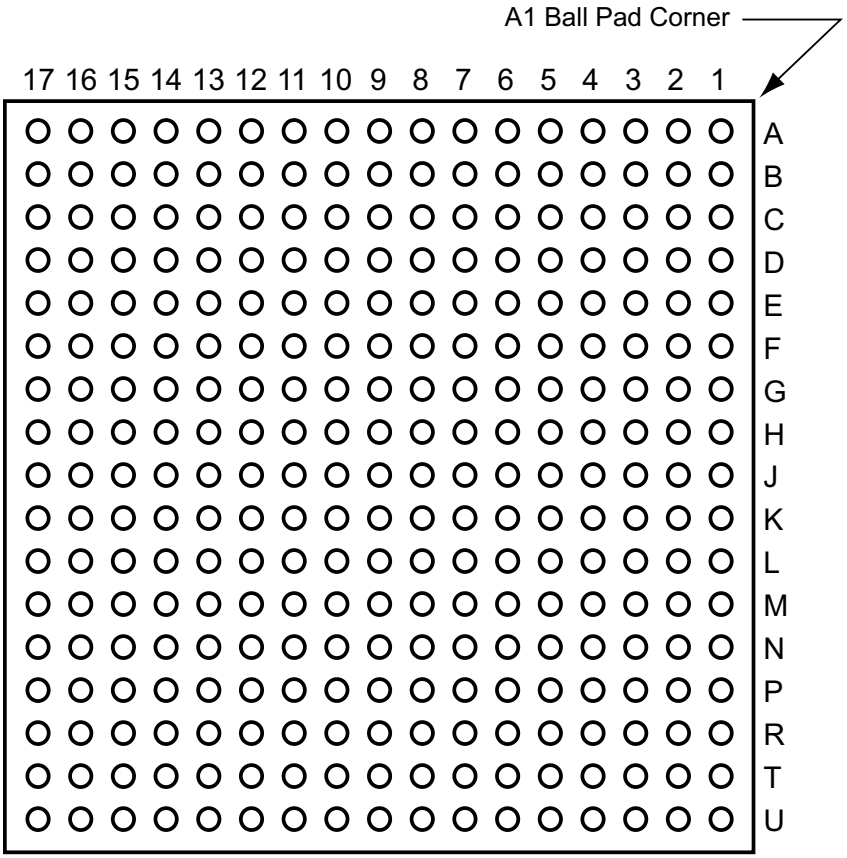

Note: This is the bottom view of the package.

Note

For Package Manufacturing and Environmental information, visit the Resource Center at http://www.microsemi.com/soc/products/solutions/package/docs.aspx .

CS289	
Pin Number	AGLP030 Function
A1	IO03RSB0
A2	NC
A3	NC
A4	GND
A5	IO10RSB0
A6	IO14RSB0
A7	IO16RSB0
A8	IO18RSB0
A9	GND
A10	IO23RSB0
A11	IO27RSB0
A12	NC
A13	NC
A14	GND
A15	NC
A16	NC
A17	IO30RSB0
B1	IO01RSB0
B2	GND
B3	NC
B4	NC
B5	IO07RSB0
B6	NC
B7	VCCIB0
B8	IO17RSB0
B9	IO19RSB0
B10	IO24RSB0
B11	IO28RSB0
B12	VCCIB0
B13	NC
B14	NC
B15	NC
B16	IO31RSB0
B17	GND
C1	NC
C2	IO00RSB0
C3	IO04RSB0

CS289	
Pin Number	AGLP030 Function
C4	NC
C5	VCCIB0
C6	IO09RSB0
C7	IO13RSB0
C8	IO15RSB0
C9	IO21RSB0
C10	GND
C11	IO29RSB0
C12	NC
C13	NC
C14	NC
C15	GND
C16	IO34RSB0
C17	NC
D1	NC
D2	IO119RSB3
D3	GND
D4	IO02RSB0
D5	NC
D6	NC
D7	NC
D8	GND
D9	IO20RSB0
D10	IO25RSB0
D11	NC
D12	NC
D13	GND
D14	IO32RSB0
D15	IO35RSB0
D16	NC
D17	NC
E1	VCCIB3
E2	IO114RSB3
E3	IO115RSB3
E4	IO118RSB3
E5	IO05RSB0
E6	NC

CS289	
Pin Number	AGLP030 Function
E7	IO06RSB0
E8	IO11RSB0
E9	IO22RSB0
E10	IO26RSB0
E11	VCCIB0
E12	NC
E13	IO33RSB0
E14	IO36RSB1
E15	IO38RSB1
E16	VCCIB1
E17	NC
F1	IO111RSB3
F2	NC
F3	IO116RSB3
F4	VCCIB3
F5	IO117RSB3
F6	NC
F7	NC
F8	IO08RSB0
F9	IO12RSB0
F10	NC
F11	NC
F12	NC
F13	NC
F14	GND
F15	NC
F16	IO37RSB1
F17	IO41RSB1
G1	IO110RSB3
G2	GND
G3	IO113RSB3
G4	NC
G5	NC
G6	NC
G7	GND
G8	GND
G9	VCC

CS289	
Pin Number	AGLP030 Function
G10	GND
G11	GND
G12	IO40RSB1
G13	NC
G14	IO39RSB1
G15	IO44RSB1
G16	NC
G17	GND
H1	NC
H2	GEC0/IO108RSB3
H3	NC
H4	IO112RSB3
H5	NC
H6	IO109RSB3
H7	GND
H8	GND
H9	GND
H10	GND
H11	GND
H12	NC
H13	NC
H14	IO45RSB1
H15	VCCIB1
H16	GDB0/IO48RSB1
H17	IO42RSB1
J1	NC
J2	GEA0/IO107RSB3
J3	VCCIB3
J4	IO105RSB3
J5	NC
J6	NC
J7	VCC
J8	GND
J9	GND
J10	GND
J11	VCC
J12	IO50RSB1

CS289	
Pin Number	AGLP030 Function
J13	IO43RSB1
J14	IO51RSB1
J15	IO52RSB1
J16	GDC0/IO46RSB1
J17	GDA0/IO47RSB1
K1	GND
K2	GEB0/IO106RSB3
K3	IO102RSB3
K4	IO104RSB3
K5	IO99RSB3
K6	NC
K7	GND
K8	GND
K9	GND
K10	GND
K11	GND
K12	NC
K13	NC
K14	NC
K15	IO53RSB1
K16	GND
K17	IO49RSB1
L1	IO103RSB3
L2	IO101RSB3
L3	NC
L4	GND
L5	NC
L6	NC
L7	GND
L8	GND
L9	VCC
L10	GND
L11	GND
L12	IO58RSB1
L13	IO54RSB1
L14	VCCIB1
L15	NC

CS289	
Pin Number	AGLP030 Function
L16	NC
L17	NC
M1	NC
M2	VCCIB3
M3	IO100RSB3
M4	IO98RSB3
M5	IO93RSB3
M6	IO97RSB3
M7	NC
M8	NC
M9	IO71RSB2
M10	NC
M11	IO63RSB2
M12	NC
M13	IO57RSB1
M14	NC
M15	NC
M16	NC
M17	VCCIB1
N1	NC
N2	NC
N3	IO95RSB3
N4	IO96RSB3
N5	GND
N6	NC
N7	IO85RSB2
N8	IO79RSB2
N9	IO77RSB2
N10	VCCIB2
N11	NC
N12	NC
N13	IO59RSB2
N14	NC
N15	GND
N16	IO56RSB1
N17	IO55RSB1
P1	IO94RSB3

CS289	
Pin Number	AGLP030 Function
P2	NC
P3	GND
P4	NC
P5	NC
P6	IO87RSB2
P7	IO80RSB2
P8	GND
P9	IO72RSB2
P10	IO67RSB2
P11	IO61RSB2
P12	NC
P13	VCCIB2
P14	NC
P15	IO60RSB2
P16	IO62RSB2
P17	VJTAG
R1	GND
R2	IO91RSB2
R3	NC
R4	NC
R5	NC
R6	VCCIB2
R7	IO83RSB2
R8	IO78RSB2
R9	IO74RSB2
R10	IO70RSB2
R11	GND
R12	NC
R13	NC
R14	NC
R15	NC
R16	TMS
R17	TRST
T1	IO92RSB3
T2	IO89RSB2
T3	NC
T4	GND

CS289	
Pin Number	AGLP030 Function
T5	NC
T6	IO84RSB2
T7	IO81RSB2
T8	IO76RSB2
T9	VCCIB2
T10	IO69RSB2
T11	IO65RSB2
T12	IO64RSB2
T13	NC
T14	GND
T15	NC
T16	TDI
T17	TDO
U1	FF/IO90RSB2
U2	GND
U3	NC
U4	IO88RSB2
U5	IO86RSB2
U6	IO82RSB2
U7	GND
U8	IO75RSB2
U9	IO73RSB2
U10	IO68RSB2
U11	IO66RSB2
U12	GND
U13	NC
U14	NC
U15	NC
U16	TCK
U17	VPUMP

CS289	
Pin Number	AGLP060 Function
A1	GAB1/IO03RSB0
A2	NC
A3	NC
A4	GND
A5	IO10RSB0
A6	IO14RSB0
A7	IO16RSB0
A8	IO18RSB0
A9	GND
A10	IO23RSB0
A11	IO27RSB0
A12	NC
A13	NC
A14	GND
A15	NC
A16	NC
A17	GBC0/IO30RSB0
B1	GAA1/IO01RSB0
B2	GND
B3	NC
B4	NC
B5	IO07RSB0
B6	NC
B7	VCCIB0
B8	IO17RSB0
B9	IO19RSB0
B10	IO24RSB0
B11	IO28RSB0
B12	VCCIB0
B13	NC
B14	NC
B15	NC
B16	GBC1/IO31RSB0
B17	GND
C1	IO155RSB3
C2	GAA0/IO00RSB0
C3	GAC0/IO04RSB0
C4	NC

CS289	
Pin Number	AGLP060 Function
C5	VCCIB0
C6	IO09RSB0
C7	IO13RSB0
C8	IO15RSB0
C9	IO21RSB0
C10	GND
C11	IO29RSB0
C12	NC
C13	NC
C14	NC
C15	GND
C16	GBA0/IO34RSB0
C17	IO39RSB1
D1	IO150RSB3
D2	IO151RSB3
D3	GND
D4	GAB0/IO02RSB0
D5	NC
D6	NC
D7	NC
D8	GND
D9	IO20RSB0
D10	IO25RSB0
D11	NC
D12	NC
D13	GND
D14	GBB0/IO32RSB0
D15	GBA1/IO35RSB0
D16	IO37RSB1
D17	IO42RSB1
E1	VCCIB3
E2	IO147RSB3
E3	GAC2/IO152RSB3
E4	GAA2/IO156RSB3
E5	GAC1/IO05RSB0
E6	NC
E7	IO06RSB0
E8	IO11RSB0

CS289	
Pin Number	AGLP060 Function
E9	IO22RSB0
E10	IO26RSB0
E11	VCCIB0
E12	NC
E13	GBB1/IO33RSB0
E14	GBA2/IO36RSB1
E15	GBB2/IO38RSB1
E16	VCCIB1
E17	IO44RSB1
F1	GFC1/IO140RSB3
F2	IO142RSB3
F3	IO149RSB3
F4	VCCIB3
F5	GAB2/IO154RSB3
F6	IO153RSB3
F7	NC
F8	IO08RSB0
F9	IO12RSB0
F10	NC
F11	NC
F12	NC
F13	GBC2/IO40RSB1
F14	GND
F15	IO43RSB1
F16	IO46RSB1
F17	IO45RSB1
G1	GFC0/IO139RSB3
G2	GND
G3	IO144RSB3
G4	IO145RSB3
G5	IO146RSB3
G6	IO148RSB3
G7	GND
G8	GND
G9	VCC
G10	GND
G11	GND
G12	IO48RSB1

CS289	
Pin Number	AGLP060 Function
G13	IO41RSB1
G14	IO47RSB1
G15	IO49RSB1
G16	IO50RSB1
G17	GND
H1	VCOMPLF
H2	GFB0/IO137RSB3
H3	NC
H4	IO141RSB3
H5	IO143RSB3
H6	GFB1/IO138RSB3
H7	GND
H8	GND
H9	GND
H10	GND
H11	GND
H12	GCC1/IO52RSB1
H13	IO51RSB1
H14	GCA0/IO57RSB1
H15	VCCIB1
H16	GCA2/IO58RSB1
H17	GCC0/IO53RSB1
J1	VCCPLF
J2	GFA1/IO136RSB3
J3	VCCIB3
J4	IO131RSB3
J5	IO130RSB3
J6	IO129RSB3
J7	VCC
J8	GND
J9	GND
J10	GND
J11	VCC
J12	GCB2/IO59RSB1
J13	GCB1/IO54RSB1
J14	IO62RSB1
J15	IO63RSB1
J16	GCB0/IO55RSB1

CS289	
Pin Number	AGLP060 Function
J17	GCA1/IO56RSB1
K1	GND
K2	GFA0/IO135RSB3
K3	GFB2/IO133RSB3
K4	IO128RSB3
K5	IO123RSB3
K6	IO125RSB3
K7	GND
K8	GND
K9	GND
K10	GND
K11	GND
K12	IO64RSB1
K13	IO61RSB1
K14	IO66RSB1
K15	IO65RSB1
K16	GND
K17	GCC2/IO60RSB1
L1	GFA2/IO134RSB3
L2	GFC2/IO132RSB3
L3	IO127RSB3
L4	GND
L5	IO121RSB3
L6	GEC1/IO116RSB3
L7	GND
L8	GND
L9	VCC
L10	GND
L11	GND
L12	GDC1/IO72RSB1
L13	GDB1/IO74RSB1
L14	VCCIB1
L15	IO70RSB1
L16	IO68RSB1
L17	IO67RSB1
M1	IO126RSB3
M2	VCCIB3
M3	IO124RSB3

CS289	
Pin Number	AGLP060 Function
M4	IO122RSB3
M5	GEB0/IO113RSB3
M6	GEB1/IO114RSB3
M7	NC
M8	NC
M9	IO90RSB2
M10	NC
M11	IO83RSB2
M12	NC
M13	GDA1/IO76RSB1
M14	GDA0/IO77RSB1
M15	IO71RSB1
M16	IO69RSB1
M17	VCCIB1
N1	IO119RSB3
N2	IO120RSB3
N3	GEC0/IO115RSB3
N4	GEA0/IO111RSB3
N5	GND
N6	NC
N7	IO104RSB2
N8	IO98RSB2
N9	IO96RSB2
N10	VCCIB2
N11	NC
N12	NC
N13	GDB2/IO79RSB2
N14	NC
N15	GND
N16	GDB0/IO75RSB1
N17	GDC0/IO73RSB1
P1	IO118RSB3
P2	IO117RSB3
P3	GND
P4	NC
P5	NC
P6	IO106RSB2
P7	IO99RSB2

CS289	
Pin Number	**AGLP060 Function**
P8	GND
P9	IO91RSB2
P10	IO86RSB2
P11	IO81RSB2
P12	NC
P13	VCCIB2
P14	NC
P15	GDA2/IO78RSB2
P16	GDC2/IO80RSB2
P17	VJTAG
R1	GND
R2	GEA2/IO110RSB2
R3	NC
R4	NC
R5	NC
R6	VCCIB2
R7	IO102RSB2
R8	IO97RSB2
R9	IO93RSB2
R10	IO89RSB2
R11	GND
R12	NC
R13	NC
R14	NC
R15	NC
R16	TMS
R17	TRST
T1	GEA1/IO112RSB3
T2	GEC2/IO108RSB2
T3	NC
T4	GND
T5	NC
T6	IO103RSB2
T7	IO100RSB2
T8	IO95RSB2
T9	VCCIB2
T10	IO88RSB2
T11	IO84RSB2

CS289	
Pin Number	**AGLP060 Function**
T12	IO82RSB2
T13	NC
T14	GND
T15	NC
T16	TDI
T17	TDO
U1	FF/GEB2/IO109RSB2
U2	GND
U3	NC
U4	IO107RSB2
U5	IO105RSB2
U6	IO101RSB2
U7	GND
U8	IO94RSB2
U9	IO92RSB2
U10	IO87RSB2
U11	IO85RSB2
U12	GND
U13	NC
U14	NC
U15	NC
U16	TCK
U17	VPUMP

CS289	
Pin Number	AGLP125 Function
A1	GAB1/IO03RSB0
A2	IO11RSB0
A3	IO08RSB0
A4	GND
A5	IO19RSB0
A6	IO24RSB0
A7	IO26RSB0
A8	IO30RSB0
A9	GND
A10	IO35RSB0
A11	IO38RSB0
A12	IO40RSB0
A13	IO42RSB0
A14	GND
A15	IO48RSB0
A16	IO54RSB0
A17	GBC0/IO57RSB0
B1	GAA1/IO01RSB0
B2	GND
B3	IO06RSB0
B4	IO13RSB0
B5	IO15RSB0
B6	IO21RSB0
B7	VCCIB0
B8	IO28RSB0
B9	IO31RSB0
B10	IO37RSB0
B11	IO39RSB0
B12	VCCIB0
B13	IO44RSB0
B14	IO46RSB0
B15	IO49RSB0
B16	GBC1/IO58RSB0
B17	GND
C1	IO210RSB3
C2	GAA0/IO00RSB0
C3	GAC0/IO04RSB0
C4	IO09RSB0

CS289	
Pin Number	AGLP125 Function
C5	VCCIB0
C6	IO17RSB0
C7	IO23RSB0
C8	IO27RSB0
C9	IO33RSB0
C10	GND
C11	IO43RSB0
C12	IO45RSB0
C13	IO50RSB0
C14	IO52RSB0
C15	GND
C16	GBA0/IO61RSB0
C17	IO68RSB1
D1	IO204RSB3
D2	IO205RSB3
D3	GND
D4	GAB0/IO02RSB0
D5	IO07RSB0
D6	IO10RSB0
D7	IO18RSB0
D8	GND
D9	IO34RSB0
D10	IO41RSB0
D11	IO47RSB0
D12	IO55RSB0
D13	GND
D14	GBB0/IO59RSB0
D15	GBA1/IO62RSB0
D16	IO66RSB1
D17	IO70RSB1
E1	VCCIB3
E2	IO200RSB3
E3	GAC2/IO207RSB3
E4	GAA2/IO211RSB3
E5	GAC1/IO05RSB0
E6	IO12RSB0
E7	IO16RSB0
E8	IO22RSB0

CS289	
Pin Number	AGLP125 Function
E9	IO32RSB0
E10	IO36RSB0
E11	VCCIB0
E12	IO56RSB0
E13	GBB1/IO60RSB0
E14	GBA2/IO63RSB1
E15	GBB2/IO65RSB1
E16	VCCIB1
E17	IO73RSB1
F1	GFC1/IO194RSB3
F2	IO196RSB3
F3	IO202RSB3
F4	VCCIB3
F5	GAB2/IO209RSB3
F6	IO208RSB3
F7	IO14RSB0
F8	IO20RSB0
F9	IO25RSB0
F10	IO29RSB0
F11	IO51RSB0
F12	IO53RSB0
F13	GBC2/IO67RSB1
F14	GND
F15	IO75RSB1
F16	IO71RSB1
F17	IO77RSB1
G1	GFC0/IO193RSB3
G2	GND
G3	IO198RSB3
G4	IO203RSB3
G5	IO201RSB3
G6	IO206RSB3
G7	GND
G8	GND
G9	VCC
G10	GND
G11	GND
G12	IO72RSB1

CS289	
Pin Number	AGLP125 Function
G13	IO64RSB1
G14	IO69RSB1
G15	IO78RSB1
G16	IO76RSB1
G17	GND
H1	VCOMPLF
H2	GFB0/IO191RSB3
H3	IO195RSB3
H4	IO197RSB3
H5	IO199RSB3
H6	GFB1/IO192RSB3
H7	GND
H8	GND
H9	GND
H10	GND
H11	GND
H12	GCC1/IO79RSB1
H13	IO74RSB1
H14	GCA0/IO84RSB1
H15	VCCIB1
H16	GCA2/IO85RSB1
H17	GCC0/IO80RSB1
J1	VCCPLF
J2	GFA1/IO190RSB3
J3	VCCIB3
J4	IO185RSB3
J5	IO183RSB3
J6	IO181RSB3
J7	VCC
J8	GND
J9	GND
J10	GND
J11	VCC
J12	GCB2/IO86RSB1
J13	GCB1/IO81RSB1
J14	IO90RSB1
J15	IO89RSB1
J16	GCB0/IO82RSB1

CS289	
Pin Number	AGLP125 Function
J17	GCA1/IO83RSB1
K1	GND
K2	GFA0/IO189RSB3
K3	GFB2/IO187RSB3
K4	IO179RSB3
K5	IO175RSB3
K6	IO177RSB3
K7	GND
K8	GND
K9	GND
K10	GND
K11	GND
K12	IO88RSB1
K13	IO94RSB1
K14	IO95RSB1
K15	IO93RSB1
K16	GND
K17	GCC2/IO87RSB1
L1	GFA2/IO188RSB3
L2	GFC2/IO186RSB3
L3	IO182RSB3
L4	GND
L5	IO173RSB3
L6	GEC1/IO170RSB3
L7	GND
L8	GND
L9	VCC
L10	GND
L11	GND
L12	GDC1/IO99RSB1
L13	GDB1/IO101RSB1
L14	VCCIB1
L15	IO98RSB1
L16	IO92RSB1
L17	IO91RSB1
M1	IO184RSB3
M2	VCCIB3
M3	IO176RSB3

CS289	
Pin Number	AGLP125 Function
M4	IO172RSB3
M5	GEB0/IO167RSB3
M6	GEB1/IO168RSB3
M7	IO159RSB2
M8	IO161RSB2
M9	IO135RSB2
M10	IO128RSB2
M11	IO121RSB2
M12	IO113RSB2
M13	GDA1/IO103RSB1
M14	GDA0/IO104RSB1
M15	IO97RSB1
M16	IO96RSB1
M17	VCCIB1
N1	IO180RSB3
N2	IO178RSB3
N3	GEC0/IO169RSB3
N4	GEA0/IO165RSB3
N5	GND
N6	IO156RSB2
N7	IO148RSB2
N8	IO144RSB2
N9	IO137RSB2
N10	VCCIB2
N11	IO119RSB2
N12	IO111RSB2
N13	GDB2/IO106RSB2
N14	IO109RSB2
N15	GND
N16	GDB0/IO102RSB1
N17	GDC0/IO100RSB1
P1	IO174RSB3
P2	IO171RSB3
P3	GND
P4	IO160RSB2
P5	IO157RSB2
P6	IO154RSB2
P7	IO152RSB2

CS289	
Pin Number	**AGLP125 Function**
P8	GND
P9	IO132RSB2
P10	IO125RSB2
P11	IO126RSB2
P12	IO112RSB2
P13	VCCIB2
P14	IO108RSB2
P15	GDA2/IO105RSB2
P16	GDC2/IO107RSB2
P17	VJTAG
R1	GND
R2	GEA2/IO164RSB2
R3	IO158RSB2
R4	IO155RSB2
R5	IO150RSB2
R6	VCCIB2
R7	IO145RSB2
R8	IO141RSB2
R9	IO134RSB2
R10	IO130RSB2
R11	GND
R12	IO118RSB2
R13	IO116RSB2
R14	IO114RSB2
R15	IO110RSB2
R16	TMS
R17	TRST
T1	GEA1/IO166RSB3
T2	GEC2/IO162RSB2
T3	IO153RSB2
T4	GND
T5	IO147RSB2
T6	IO143RSB2
T7	IO140RSB2
T8	IO139RSB2
T9	VCCIB2
T10	IO131RSB2
T11	IO127RSB2

CS289	
Pin Number	**AGLP125 Function**
T12	IO124RSB2
T13	IO122RSB2
T14	GND
T15	IO115RSB2
T16	TDI
T17	TDO
U1	FF/GEB2/IO163RSB2
U2	GND
U3	IO151RSB2
U4	IO149RSB2
U5	IO146RSB2
U6	IO142RSB2
U7	GND
U8	IO138RSB2
U9	IO136RSB2
U10	IO133RSB2
U11	IO129RSB2
U12	GND
U13	IO123RSB2
U14	IO120RSB2
U15	IO117RSB2
U16	TCK
U17	VPUMP

5 – Datasheet Information

List of Changes

The following table lists critical changes that were made in each revision of the IGLOO PLUS datasheet.

Revision	Changes	Page
Revision 17 (December 2015)	Updated Commercial and Industrial temperature range to show junction temperature in "IGLOO PLUS Ordering Information" section and "Temperature Grade Offerings" section (SAR 73547).	1-III, 1-IV
	Removed Ambient temperature parameter in Table 2-2 • Recommended Operating Conditions[1,2] (SAR 73547).	2-2
	Table notes are added to Table 2-2 • Recommended Operating Conditions[1,2] stating that: • VMV pins must be connected to the corresponding VCCI pins. • Software default junction temperature range in the Libero SoC software is set to 0°C to +70°C for commercial, and -40°C to +85°C for industrial.	2-2
	Updated Table 2-5 • Package Thermal Resistivities (SAR 60078).	2-6
	Added 2 mA drive strength information in the following tables (SAR 57182): • Table 2-36 • 3.3 V LVTTL / 3.3 V LVCMOS Low Slew – Applies to 1.5 V DC Core Voltage • Table 2-37 • 3.3 V LVTTL / 3.3 V LVCMOS High Slew – Applies to 1.5 V DC Core Voltage • Table 2-38 • 3.3 V LVTTL / 3.3 V LVCMOS Low Slew – Applies to 1.2 V DC Core Voltage • Table 2-39 • 3.3 V LVTTL / 3.3 V LVCMOS High Slew – Applies to 1.2 V DC Core Voltage	2-28, 2-28, 2-28, 2-29
	Fixed typo for "VQ128" section in "Package Pin Assignments" section	4-1
Revision 16 (December 2012)	The "IGLOO PLUS Ordering Information" section has been updated to mention "Y" as "Blank" mentioning "Device Does Not Include License to Implement IP Based on the Cryptography Research, Inc. (CRI) Patent Portfolio" (SAR 43175).	III
	The note in Table 2-90 • IGLOO PLUS CCC/PLL Specification and Table 2-91 • IGLOO PLUS CCC/PLL Specification referring the reader to SmartGen was revised to refer instead to the online help associated with the core (SAR 42566).	2-61, 2-62
	Live at Power-Up (LAPU) has been replaced with 'Instant On'.	NA
Revision 15 (October 2012)	Values updated for IGLOO PLUS V2 or V5 Devices, 1.5 V Core Supply Voltage in Table 2-15 • Different Components Contributing to Dynamic Power Consumption in IGLOO PLUS Devices and for IGLOO PLUS V2 Devices, 1.2 V Core Supply Voltage in Table 2-17 • Different Components Contributing to Dynamic Power Consumption in IGLOO PLUS Devices (SAR 31988). Also added a new Note to the two tables.	2-10, 2-11
	Libero Integrated Design Environment (IDE) was changed to Libero System-on-Chip (SoC) throughout the document (SAR 40277).	N/A
Revision 14 (September 2012)	The "Security" section was modified to clarify that Microsemi does not support read-back of programmed data.	1-2

Revision	Changes	Page
Revision 13 (June 2012)	Figure 2-30 • FIFO Read and Figure 2-31 • FIFO Write have been added (SAR 34843).	2-73
	Updated the terminology used in Timing Characteristics in the following tables: Table 2-96 • FIFO and Table 2-97 • FIFO (SAR 38236).	2-76
	The following sentence was removed from the "VMVx I/O Supply Voltage (quiet)" section in the "Pin Descriptions and Packaging" section: "Within the package, the VMV plane is decoupled from the simultaneous switching noise originating from the output buffer VCCI domain" and replaced with “Within the package, the VMV plane biases the input stage of the I/Os in the I/O banks” (SAR 38320). The datasheet mentions that "VMV pins must be connected to the corresponding VCCI pins" for an ESD enhancement.	3-1
Revision 12 (March 2012)	The "In-System Programming (ISP) and Security" section and "Security" section were revised to clarify that although no existing security measures can give an absolute guarantee, Microsemi FPGAs implement the best security available in the industry (SAR 34664).	I, 1-2
	The Y security option and Licensed DPA Logo were added to the "IGLOO PLUS Ordering Information" section. The trademarked Licensed DPA Logo identifies that a product is covered by a DPA counter-measures license from Cryptography Research (SAR 34724).	III
	The "Specifying I/O States During Programming" section is new (SAR 34695).	1-7
	The following sentence was removed from the "Advanced Architecture" section: "In addition, extensive on-chip programming circuitry allows for rapid, single-voltage (3.3 V) programming of IGLOO PLUS devices via an IEEE 1532 JTAG interface" (SAR 34684).	1-3

Revision	Changes	Page
Revision 12 (continued)	The reference to guidelines for global spines and VersaTile rows, given in the "Global Clock Contribution—P_{CLOCK}" section, was corrected to the "Spine Architecture" section of the Global Resources chapter in the *IGLOO PLUS FPGA Fabric User's Guide* (SAR 34733).	2-12
	t_{DOUT} was corrected to t_{DIN} in Figure 2-4 • Input Buffer Timing Model and Delays (example) (SAR 37107).	2-16
	The AC Loading figures in the "Single-Ended I/O Characteristics" section were updated to match tables in the "Summary of I/O Timing Characteristics – Default I/O Software Settings" section (SAR 34887).	2-27
	Minimum pulse width High and Low values were added to the tables in the "Global Tree Timing Characteristics" section. The maximum frequency for global clock parameter was removed from these tables because a frequency on the global is only an indication of what the global network can do. There are other limiters such as the SRAM, I/Os, and PLL. SmartTime software should be used to determine the design frequency (SAR 36963).	2-58
	Table 2-90 • IGLOO PLUS CCC/PLL Specification and Table 2-91 • IGLOO PLUS CCC/PLL Specification were updated. A note was added to both tables indicating that when the CCC/PLL core is generated by Microsemi core generator software, not all delay values of the specified delay increments are available (SAR 34820). The value for serial clock was missing from these tables and has been restored. The value and units for input cycle-to-cycle jitter were incorrect and have been restored. The note to Table 2-90 • IGLOO PLUS CCC/PLL Specification giving specifications for which measurements done was corrected from VCC/VCCPLL = 1.14 V to VCC/VCCPLL = 1.425 V. The Delay Range in Block: Programmable Delay 2 value in Table 2-91 • IGLOO PLUS CCC/PLL Specification was corrected from 0.025 to 0.863 (SAR 37058).	2-61, 2-62
	Figure 2-28 • Write Access after Read onto Same Address was deleted. Reference was made to a new application note, *Simultaneous Read-Write Operations in Dual-Port SRAM for Flash-Based cSoCs and FPGAs*, which covers these cases in detail (SAR 34868). The port names in the SRAM "Timing Waveforms", SRAM "Timing Characteristics" tables, Figure 2-32 • FIFO Reset, and the FIFO "Timing Characteristics" tables were revised to ensure consistency with the software names (SAR 35748).	2-65, 2-68, 2-74, 2-76
	The "Pin Descriptions and Packaging" chapter has been added (SAR 34769).	3-1
	Package names used in the "Package Pin Assignments" section were revised to match standards given in *Package Mechanical Drawings* (SAR 34769).	4-1
Revision 11 (July 2010)	The versioning system for datasheets has been changed. Datasheets are assigned a revision number that increments each time the datasheet is revised. The "IGLOO PLUS Device Status" table indicates the status for each device in the family.	N/A
	The "Reprogrammable Flash Technology" section was revised to add "250 MHz (1.5 V systems) and 160 MHz (1.2 V systems) System Performance."	I
	The "I/Os with Advanced I/O Standards" section was revised to add definitions for hot-swap and cold-sparing.	1-6
	Conditional statements regarding hot insertion were removed from the description of VI in Table 2-1 • Absolute Maximum Ratings, since all IGLOO PLUS devices are hot insertion enabled.	2-1

Revision	Changes	Page
Revision 11 (continued)	Table 2-2 • Recommended Operating Conditions[1,2] was revised. 1.2 V DC wide range supply voltage and 3.3 V wide range supply voltage (SAR 26270) were added for VCCI. VJTAG DC Voltage was revised (SAR 24052). The value range for VPUMP programming voltage for operation was changed from "0 to 3.45" to "0 to 3.6" (SAR 25220).	2-2
	Table 2-6 • Temperature and Voltage Derating Factors for Timing Delays (normalized to TJ = 70°C, VCC = 1.425 V) and Table 2-7 • Temperature and Voltage Derating Factors for Timing Delays (normalized to TJ = 70°C, VCC = 1.14 V) were revised.	2-6, 2-6
	Table 2-8 • Power Supply State per Mode is new.	2-7
	The tables in the "Quiescent Supply Current" section were updated (SARs 24882 and 24112). Some of the table notes were changed or deleted.	2-7
	VIH maximum values in tables were updated as needed to 3.6 V (SARs 20990, 79370).	N/A
	The values in the following tables were updated. 3.3 V LVCMOS and 1.2 V LVCMOS wide range were added to the tables where applicable. Table 2-13 • Summary of I/O Input Buffer Power (per pin) – Default I/O Software Settings Table 2-14 • Summary of I/O Output Buffer Power (per pin) – Default I/O Software Settings[1] Table 2-21 • Summary of Maximum and Minimum DC Input and Output Levels Applicable to Commercial and Industrial Conditions—Software Default Settings Table 2-22 • Summary of Maximum and Minimum DC Input Levels Table 2-23 • Summary of AC Measuring Points Table 2-25 • Summary of I/O Timing Characteristics—Software Default Settings, STD Speed Grade, Commercial-Case Conditions: T_J = 70°C, Worst-Case VCC = 1.425 V, Worst-Case VCCI = 3.0 V Table 2-26 • Summary of I/O Timing Characteristics—Software Default Settings, STD Speed Grade Commercial-Case Conditions: T_J = 70°C, Worst-Case VCC = 1.14 V, Worst-Case VCCI = 3.0 V Table 2-28 • I/O Output Buffer Maximum Resistances [1]	2-9 2-9 2-19 2-20 2-20 2-22 2-23 2-24
	A table note was added to Table 2-16 • Different Components Contributing to the Static Power Consumption in IGLOO PLUS Devices and Table 2-18 • Different Components Contributing to the Static Power Consumption in IGLOO PLUS Devices stating the value for PDC4 is the minimum contribution of the PLL when operating at lowest frequency.	2-10, 2-11
	Table 2-29 • I/O Weak Pull-Up/Pull-Down Resistances was revised, including addition of 3.3 V and 1.2 V LVCMOS wide range. The notes defining $R_{WEAK\ PULL\text{-}UP\text{-}MAX}$ and $R_{WEAK\ PULLDOWN\text{-}MAX}$ were revised (SAR 21348).	2-25
	Table 2-30 • I/O Short Currents IOSH/IOSL was revised to include data for 3.3 V and 1.2 V LVCMOS wide range (SAR 79353 and SAR 79366).	2-25
	Table 2-31 • Duration of Short Circuit Event before Failure was revised to change the maximum temperature from 110°C to 100°C, with an example of six months instead of three months (SAR 26259).	2-26

Revision	Changes	Page
Revision 11 (continued)	The tables in the "Single-Ended I/O Characteristics" section were updated. Notes clarifying IIL and IIH were added. Tables for 3.3 V LVCMOS and 1.2 V LVCMOS wide range were added (SAR 79370, SAR 79353, and SAR 79366). Notes in the wide range tables state that the minimum drive strength for any LVCMOS 3.3 V (or LVCMOS 1.2 V) software configuration when run in wide range is ±100 µA. Drive strength displayed in the software is supported for normal range only. For a detailed I/V curve, refer to the IBIS models (SAR 25700).	2-27
	The following sentence was deleted from the "2.5 V LVCMOS" section: It uses a 5 V–tolerant input buffer and push-pull output buffer (SAR 24916).	2-32
	The tables in the "Input Register" section, "Output Register" section, and "Output Enable Register" section were updated. The tables in the "VersaTile Characteristics" section were updated.	2-45 through 2-56
	The following tables were updated in the "Global Tree Timing Characteristics" section: Table 2-85 • AGLP060 Global Resource (1.5 V) Table 2-86 • AGLP125 Global Resource (1.5 V) Table 2-88 • AGLP060 Global Resource (1.2 V)	2-58
	Table 2-90 • IGLOO PLUS CCC/PLL Specification and Table 2-91 • IGLOO PLUS CCC/PLL Specification were revised (SAR 79388). VCO output jitter and maximum peak-to-peak jitter data were changed. Three notes were added to the table in connection with these changes.	2-61
	Figure 2-28 • Write Access after Write onto Same Address and Figure 2-29 • Write Access after Read onto Same Address were deleted.	N/A
	The tables in the "SRAM", "FIFO" and "Embedded FlashROM Characteristics" sections were updated.	2-68, 2-78

Revision	Changes	Page
Revision 10 (Apr 2009) Product Brief v1.5 DC and Switching Characteristics Advance v0.5	The –F speed grade is no longer offered for IGLOO PLUS devices. References to it have been removed from the document. The speed grade column and note regarding –F speed grade were removed from "IGLOO PLUS Ordering Information". The "Speed Grade and Temperature Grade Matrix" section was removed.	III, IV
Revision 9 (Feb 2009) Product Brief v1.4	The "Advanced I/O" section was revised to add two bullets regarding support of wide range power supply voltage.	I
	The "I/Os with Advanced I/O Standards" section was revised to add 3.0 V wide range to the list of supported voltages. The "Wide Range I/O Support" section is new.	1-7
Revision 8 (Jan 2009) Packaging v1.5	The "CS201" pin table was revised to add a note regarding pins G1 and H1.	4-8
Revision 7 (Dec 2008) Product Brief v1.3	A note was added to IGLOO PLUS Devices: "AGLP060 in CS201 does not support the PLL."	I
	Table 2 • IGLOO PLUS FPGAs Package Size Dimensions was updated to change the nominal size of VQ176 from 100 to 400 mm^2.	II
Revision 6 (Oct 2008) DC and Switching Characteristics Advance v0.4	Data was revised significantly in the following tables: Table 2-25 • Summary of I/O Timing Characteristics—Software Default Settings, STD Speed Grade, Commercial-Case Conditions: T_J = 70°C, Worst-Case VCC = 1.425 V, Worst-Case VCCI = 3.0 V Table 2-26 • Summary of I/O Timing Characteristics—Software Default Settings, STD Speed Grade Commercial-Case Conditions: T_J = 70°C, Worst-Case VCC = 1.14 V, Worst-Case VCCI = 3.0 V Table 2-50 • 2.5 LVCMOS Low Slew – Applies to 1.2 V DC Core Voltage Table 2-51 • 2.5 V LVCMOS High Slew – Applies to 1.2 V DC Core Voltage	2-22, 2-33
Revision 5 (Aug 2008) Product Brief v1.2	The VQ128 and VQ176 packages were added to Table 1 • IGLOO PLUS Product Family, the "I/Os Per Package [1]" table, Table 2 • IGLOO PLUS FPGAs Package Size Dimensions, "IGLOO PLUS Ordering Information", and the "Temperature Grade Offerings" table.	I to IV
Packaging v1.4	The "VQ128" package drawing and pin table are new.	4-2
	The "VQ176" package drawing and pin table are new.	4-5
Revision 4 (Jul 2008) Product Brief v1.1 DC and Switching Characteristics Advance v0.3	As a result of the Libero IDE v8.4 release, Actel now offers a wide range of core voltage support. The document was updated to change 1.2 V / 1.5 V to 1.2 V to 1.5 V.	N/A
Revision 3 (Jun 2008) DC and Switching Characteristics Advance v0.2	Tables have been updated to reflect default values in the software. The default I/O capacitance is 5 pF. Tables have been updated to include the LVCMOS 1.2 V I/O set.	N/A
	Table note 3 was updated in Table 2-2 • Recommended Operating Conditions[1,2] to add the sentence, "VCCI should be at the same voltage within a given I/O bank." References to table notes 5, 6, 7, and 8 were added. Reference to table note 3 was removed from VPUMP Operation and placed next to VCC.	2-2
	Table 2-4 • Overshoot and Undershoot Limits[1] was revised to remove "as measured on quiet I/Os" from the title. Table note 2 was revised to remove "estimated SSO density over cycles." Table note 3 was deleted.	2-3

Revision	Changes	Page
Revision 3 (continued)	The table note for Table 2-9 • Quiescent Supply Current (IDD) Characteristics, IGLOO PLUS Flash*Freeze Mode* to remove the sentence stating that values do not include I/O static contribution.	2-7
	The table note for Table 2-10 • Quiescent Supply Current (IDD) Characteristics, IGLOO PLUS Sleep Mode* was updated to remove VJTAG and VCCI and the statement that values do not include I/O static contribution.	2-7
	The table note for Table 2-11 • Quiescent Supply Current (IDD) Characteristics, IGLOO PLUS Shutdown Mode was updated to remove the statement that values do not include I/O static contribution.	2-7
	Note 2 of Table 2-12 • Quiescent Supply Current (IDD), No IGLOO PLUS Flash*Freeze Mode 1 was updated to include VCCPLL. Table note 4 was deleted.	2-8
	Table 2-13 • Summary of I/O Input Buffer Power (per pin) – Default I/O Software Settings and Table 2-14 • Summary of I/O Output Buffer Power (per pin) – Default I/O Software Settings[1] were updated to remove static power. The table notes were updated to reflect that power was measured on VCC_I. Table note 2 was added to Table 2-13 • Summary of I/O Input Buffer Power (per pin) – Default I/O Software Settings.	2-9, 2-9
	Table 2-16 • Different Components Contributing to the Static Power Consumption in IGLOO PLUS Devices and Table 2-18 • Different Components Contributing to the Static Power Consumption in IGLOO PLUS Devices were updated to change the definition for P_{DC5} from bank static power to bank quiescent power. Table subtitles were added for Table 2-16 • Different Components Contributing to the Static Power Consumption in IGLOO PLUS Devices, Table 2-17 • Different Components Contributing to Dynamic Power Consumption in IGLOO PLUS Devices, and Table 2-18 • Different Components Contributing to the Static Power Consumption in IGLOO PLUS Devices.	2-10, 2-11
	The "Total Static Power Consumption—P_{STAT}" section was revised.	2-12
	Table 2-32 • Schmitt Trigger Input Hysteresis is new.	2-26
Packaging v1.3	The "CS281" package drawing is new.	4-13
	The "CS281" table for the AGLP125 device is new.	4-13
Revision 3 (continued)	The "CS289" package drawing was incorrect. The graphic was showing the CS281 mechanical drawing and not the CS289 mechanical drawing. This has now been corrected.	4-17
Revision 2 (Jun 2008) Packaging v1.2	The "CS289" table for the AGLP030 device is new.	4-17
Revision 1 (Jun 2008) Packaging v1.1	The "CS289" table for the AGLP060 device is new.	4-20
	The "CS289" table for the AGLP125 device is new.	4-23

Datasheet Categories

Categories

In order to provide the latest information to designers, some datasheet parameters are published before data has been fully characterized from silicon devices. The data provided for a given device, as highlighted in the "IGLOO PLUS Device" table on page II, is designated as either "Product Brief," "Advance," "Preliminary," or "Production." The definitions of these categories are as follows:

Product Brief

The product brief is a summarized version of a datasheet (advance or production) and contains general product information. This document gives an overview of specific device and family information.

Advance

This version contains initial estimated information based on simulation, other products, devices, or speed grades. This information can be used as estimates, but not for production. This label only applies to the DC and Switching Characteristics chapter of the datasheet and will only be used when the data has not been fully characterized.

Preliminary

The datasheet contains information based on simulation and/or initial characterization. The information is believed to be correct, but changes are possible.

Production

This version contains information that is considered to be final.

Export Administration Regulations (EAR)

The products described in this document are subject to the Export Administration Regulations (EAR). They could require an approved export license prior to export from the United States. An export includes release of product or disclosure of technology to a foreign national inside or outside the United States.

Safety Critical, Life Support, and High-Reliability Applications Policy

The products described in this advance status document may not have completed the Microsemi qualification process. Products may be amended or enhanced during the product introduction and qualification process, resulting in changes in device functionality or performance. It is the responsibility of each customer to ensure the fitness of any product (but especially a new product) for a particular purpose, including appropriateness for safety-critical, life-support, and other high-reliability applications. Consult the Microsemi SoC Products Group Terms and Conditions for specific liability exclusions relating to life-support applications. A reliability report covering all of the SoC Products Group's products is available at http://www.microsemi.com/soc/documents/ORT_Report.pdf. Microsemi also offers a variety of enhanced qualification and lot acceptance screening procedures. Contact your local sales office for additional reliability information.

Microsemi Corporate Headquarters
One Enterprise, Aliso Viejo,
CA 92656 USA

Within the USA: +1 (800) 713-4113
Outside the USA: +1 (949) 380-6100
Sales: +1 (949) 380-6136
Fax: +1 (949) 215-4996

E-mail: sales.support@microsemi.com

© 2015 Microsemi Corporation. All rights reserved. Microsemi and the Microsemi logo are trademarks of Microsemi Corporation. All other trademarks and service marks are the property of their respective owners.

Microsemi Corporation (Nasdaq: MSCC) offers a comprehensive portfolio of semiconductor and system solutions for communications, defense & security, aerospace and industrial markets. Products include high-performance and radiation-hardened analog mixed-signal integrated circuits, FPGAs, SoCs and ASICs; power management products; timing and synchronization devices and precise time solutions, setting the world's standard for time; voice processing devices; RF solutions; discrete components; security technologies and scalable anti-tamper products; Ethernet solutions; Power-over-Ethernet ICs and midspans; as well as custom design capabilities and services. Microsemi is headquartered in Aliso Viejo, Calif., and has approximately 3,600 employees globally. Learn more at **www.microsemi.com**.

Microsemi makes no warranty, representation, or guarantee regarding the information contained herein or the suitability of its products and services for any particular purpose, nor does Microsemi assume any liability whatsoever arising out of the application or use of any product or circuit. The products sold hereunder and any other products sold by Microsemi have been subject to limited testing and should not be used in conjunction with mission-critical equipment or applications. Any performance specifications are believed to be reliable but are not verified, and Buyer must conduct and complete all performance and other testing of the products, alone and together with, or installed in, any end-products. Buyer shall not rely on any data and performance specifications or parameters provided by Microsemi. It is the Buyer's responsibility to independently determine suitability of any products and to test and verify the same. The information provided by Microsemi hereunder is provided "as is, where is" and with all faults, and the entire risk associated with such information is entirely with the Buyer. Microsemi does not grant, explicitly or implicitly, to any party any patent rights, licenses, or any other IP rights, whether with regard to such information itself or anything described by such information. Information provided in this document is proprietary to Microsemi, and Microsemi reserves the right to make any changes to the information in this document or to any products and services at any time without notice.

51700102-17/12.15

Мы молодая и активно развивающаяся компания в области поставок электронных компонентов. Мы поставляем электронные компоненты отечественного и импортного производства напрямую от производителей и с крупнейших складов мира.

Благодаря сотрудничеству с мировыми поставщиками мы осуществляем комплексные и плановые поставки широчайшего спектра электронных компонентов.

Собственная эффективная логистика и склад в обеспечивает надежную поставку продукции в точно указанные сроки по всей России.

Мы осуществляем техническую поддержку нашим клиентам и предпродажную проверку качества продукции. На все поставляемые продукты мы предоставляем гарантию .

Осуществляем поставки продукции под контролем ВП МО РФ на предприятия военно-промышленного комплекса России , а также работаем в рамках 275 ФЗ с открытием отдельных счетов в уполномоченном банке. Система менеджмента качества компании соответствует требованиям ГОСТ ISO 9001.

Минимальные сроки поставки, гибкие цены, неограниченный ассортимент и индивидуальный подход к клиентам являются основой для выстраивания долгосрочного и эффективного сотрудничества с предприятиями радиоэлектронной промышленности, предприятиями ВПК и научно-исследовательскими институтами России.

С нами вы становитесь еще успешнее!

Наши контакты:

Телефон: +7 812 627 14 35

Электронная почта: sales@st-electron.ru

Адрес: 198099, Санкт-Петербург, Промышленная ул, дом № 19, литера Н, помещение 100-Н Офис 331