Tel: 886-2-66296288
Fax: 886-2-29174598
URL: http://www.princeton.com.tw

DESCRIPTION

PT2240 is programmable encoder utilizing CMOS Technology specially designed for remote control applications. It has a maximum of 2^{22} Address which may be designed by a one-time programmable process. It can support up to 8 Data Bits and is housed in 8 or 16-pin DIP or SOP. It encodes address and data codes into a coded waveform suitable for RF modulation. The pin assignments and application circuit are optimized for easy PCB Layout and cost saving advantage. Furthermore, PT2240's intrinsic feature of being able to support 2/3/4/6/8 data bits considerably reduces inventory pressures.

FEATURES

- CMOS technology
- Low power consumption
- Least external components
- High noise immunity
- Single resistor oscillator
- Operating voltage: 1.8~15V
- Up to 8 data pins
- Up to 2^{22} address codes
- One-time programmable process
- Available in SOP or DIP
- Reduction of inventory pressures

APPLICATIONS

- Burglar alarm system
- Car security system
- Car/Garage door controller
- Home/Office security system
- Personal alarm system

Tel: 886-2-66296288
Fax: 886-2-29174598
URL: http://www.princeton.com.tw

PIN CONFIGURATION

PT2240, 8 PINS

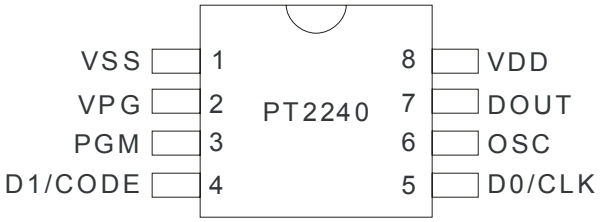

PT2240-D3, 8 PINS

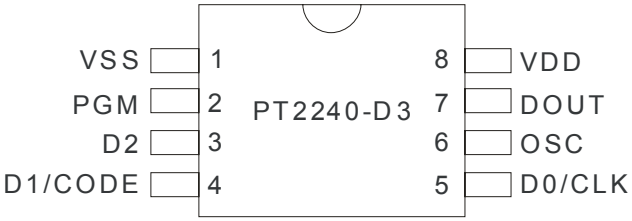

PT2240, 16 PINS

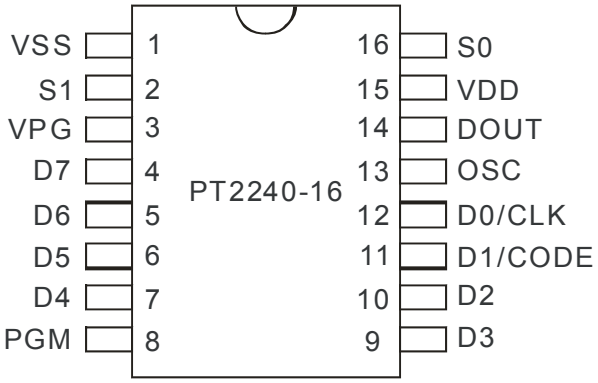

APPLICATION CIRCUIT

16 PINS, 8 DATA

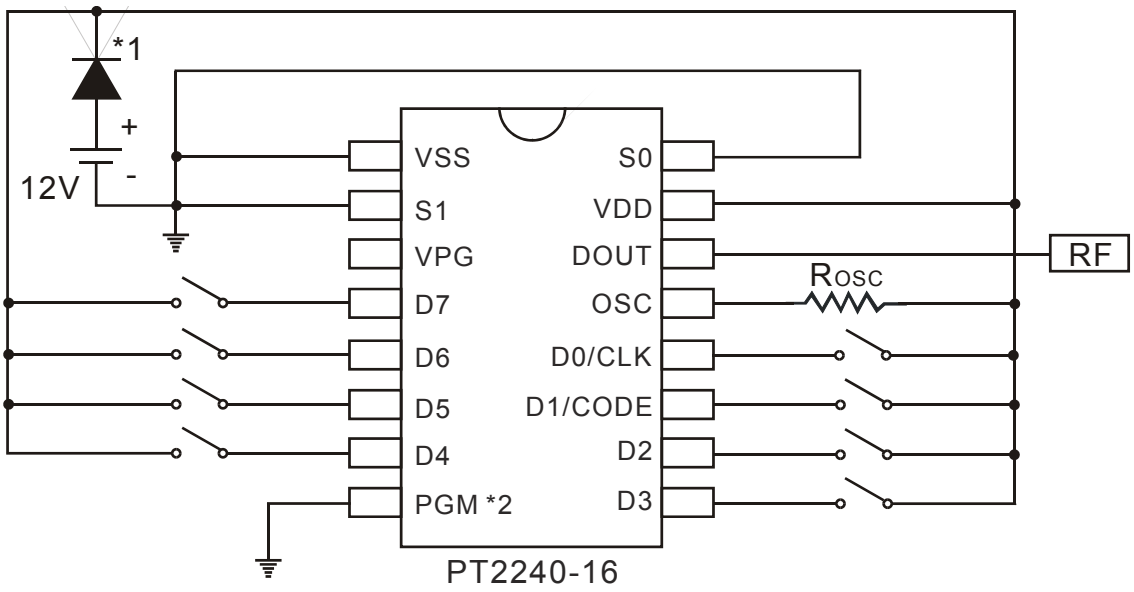

8 PINS, 2 DATA

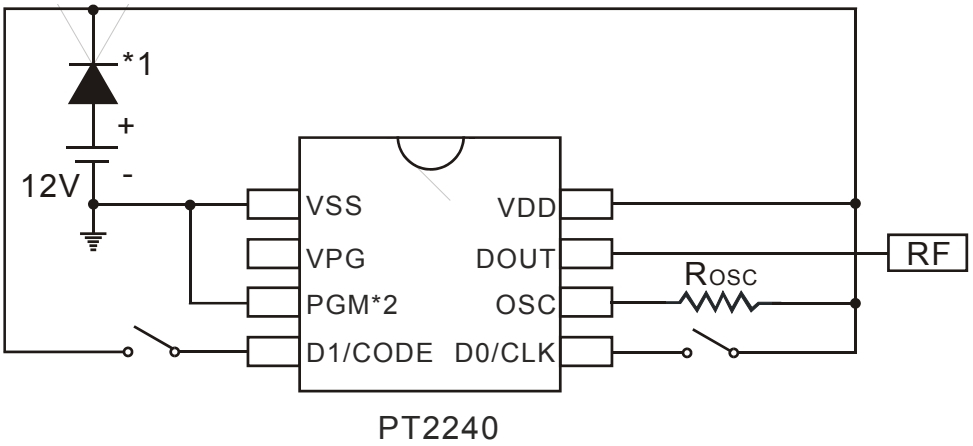

8 PINS, 3 DATA

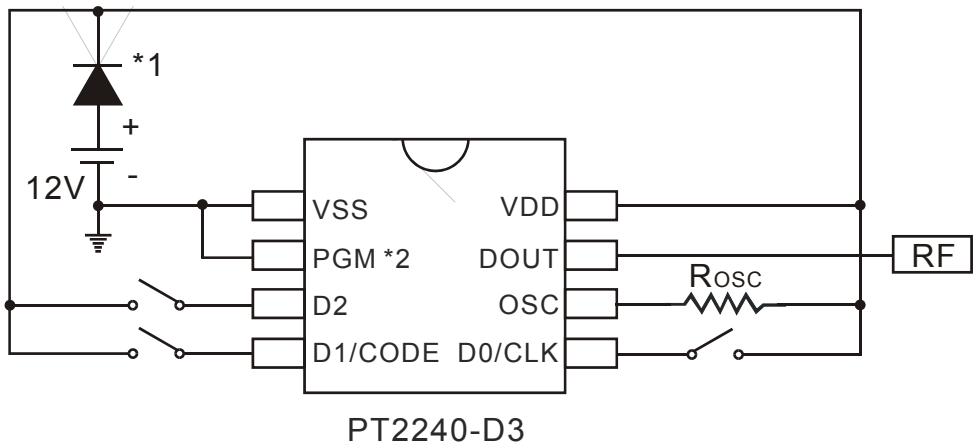

Notes:

1. In order that IC protection is assured, please make sure that a diode is connected between the battery and the VDD. If the diode is not connected and the battery polarity was inverted, then the IC will fail.
2. In order to avoid unexpected programming, we suggest PGM pin connects with ground (VSS) to avoid PGM pin changed to “High level” and cause into “programming mode”.

Tel: 886-2-66296288
Fax: 886-2-29174598
URL: http://www.princeton.com.tw

ORDER INFORMATION

Valid Part Number	Package Type	Top Code	Address Codes
PT2240P-D3	8 Pins, DIP, 300mil	PT2240P-D3	Programmed
PT2240P-D3S	8 Pins, SOP, 150mil	PT2240P-D3S	Programmed
PT2240P	8 Pins, DIP, 300mil	PT2240P	Programmed
PT2240P-S	8 Pins, SOP, 150mil	PT2240P-S	Programmed
PT2240P-16	16 Pins, DIP, 300mil	PT2240P-16	Programmed
PT2240P-16S	16 Pins, SOP, 150mil	PT2240P-16S	Programmed

PACKAGE INFORMATION

8 PINS, DIP, 300MIL

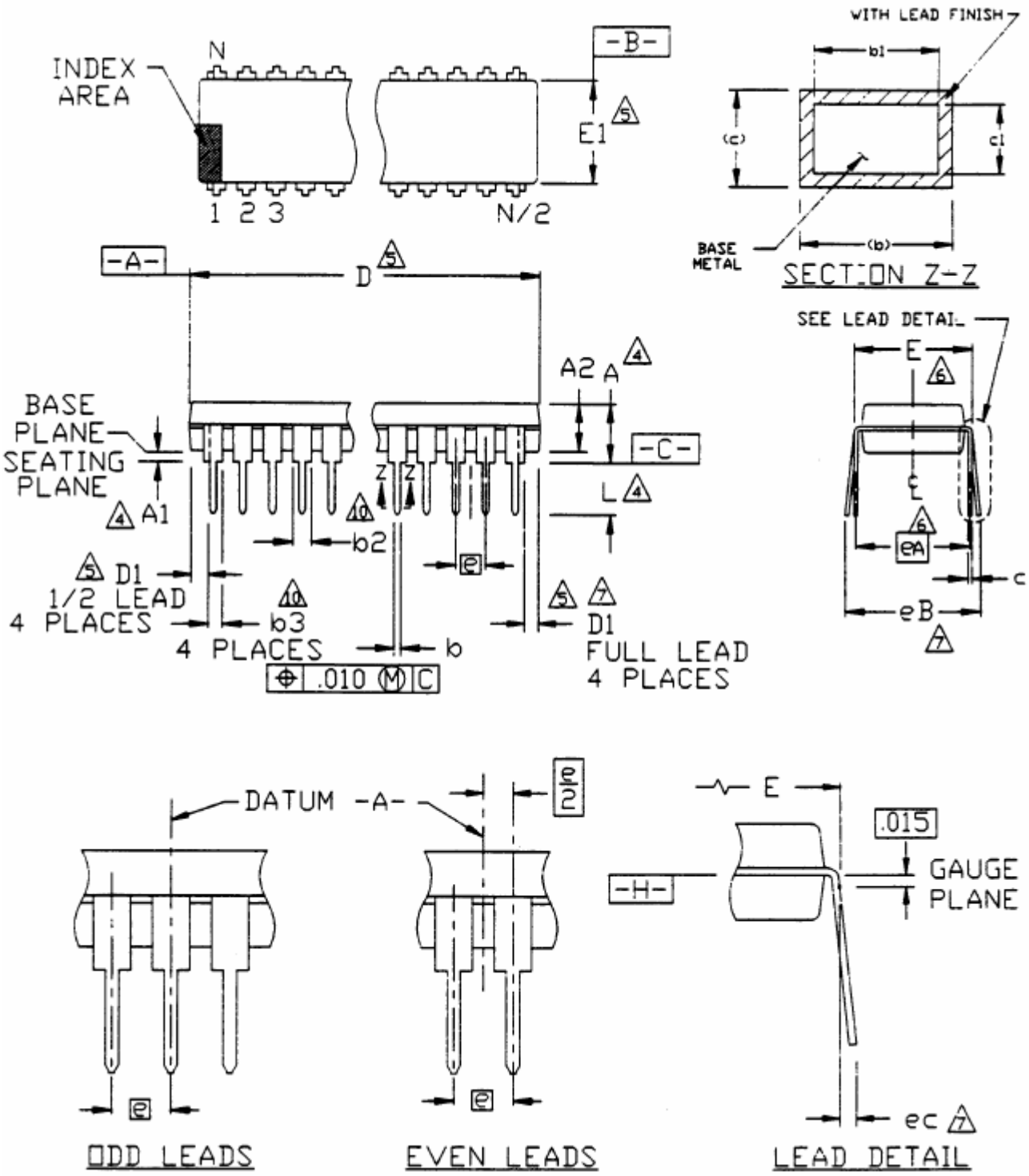

Tel: 886-2-66296288
Fax: 886-2-29174598
URL: http://www.princeton.com.tw

Symbol	Min.	Nom.	Max.
A	-	-	0.210
A1	0.015	-	-
A2	0.115	0.130	0.195
b	0.014	0.018	0.022
b1	0.014	0.018	0.020
b2	0.045	0.060	0.070
b3	0.030	0.039	0.045
c	0.008	0.010	0.014
c1	0.008	0.010	0.011
D	0.355	0.365	0.400
D1	0.005	-	-
E	0.300	0.310	0.325
E1	0.240	0.250	0.280
e	0.100 BSC.		
eA	0.300 BSC.		
eB	-	-	0.430
eC	0.000	-	0.060
L	0.115	0.130	0.150

Notes:
1. All dimensions are in INCHS.
2. Dimensioning and tolerancing per ANSI Y14.5M-1982.
3. Dimensions “A”, “A1” and “L” are measured with the package seated in JEDEC Seating Plane Gauge GS-3.
4. “D”, “D1” and “E1” dimensions do not include mold flash or protrusions. Mold flash or protrusions shall not exceed 0.010 inch.
5. “E” and “eA” measured with the leads constrained to be perpendicular to datum -C-.
6. “eB” and “eC” are measured at the lead tips with the loads unconstrained.
7. “N” is the number of terminal positions. (N=8)
8. Pointed or rounded lead tips are preferred to ease insertion.
9. “b2” and “b3” maximum dimensions are not include dambar protrusions. Dambar protrusions shall not exceed 0.010 inch (0.25 mm).
10. Variation BA has a b3 dimension and is 1/2 lead package.
11. Distance between leads including dambar protrusions to be 0.005 inch minimum.
12. Datum plane -H- coincident with the bottom of lead, where lead exits body.
13. Refer to JEDEC MS-001 Variation BA.

JEDEC is the trademark of JEDEC SOLID STATE TECHNOLOGY ASSOCIATION.

16 PINS, DIP, 300MIL

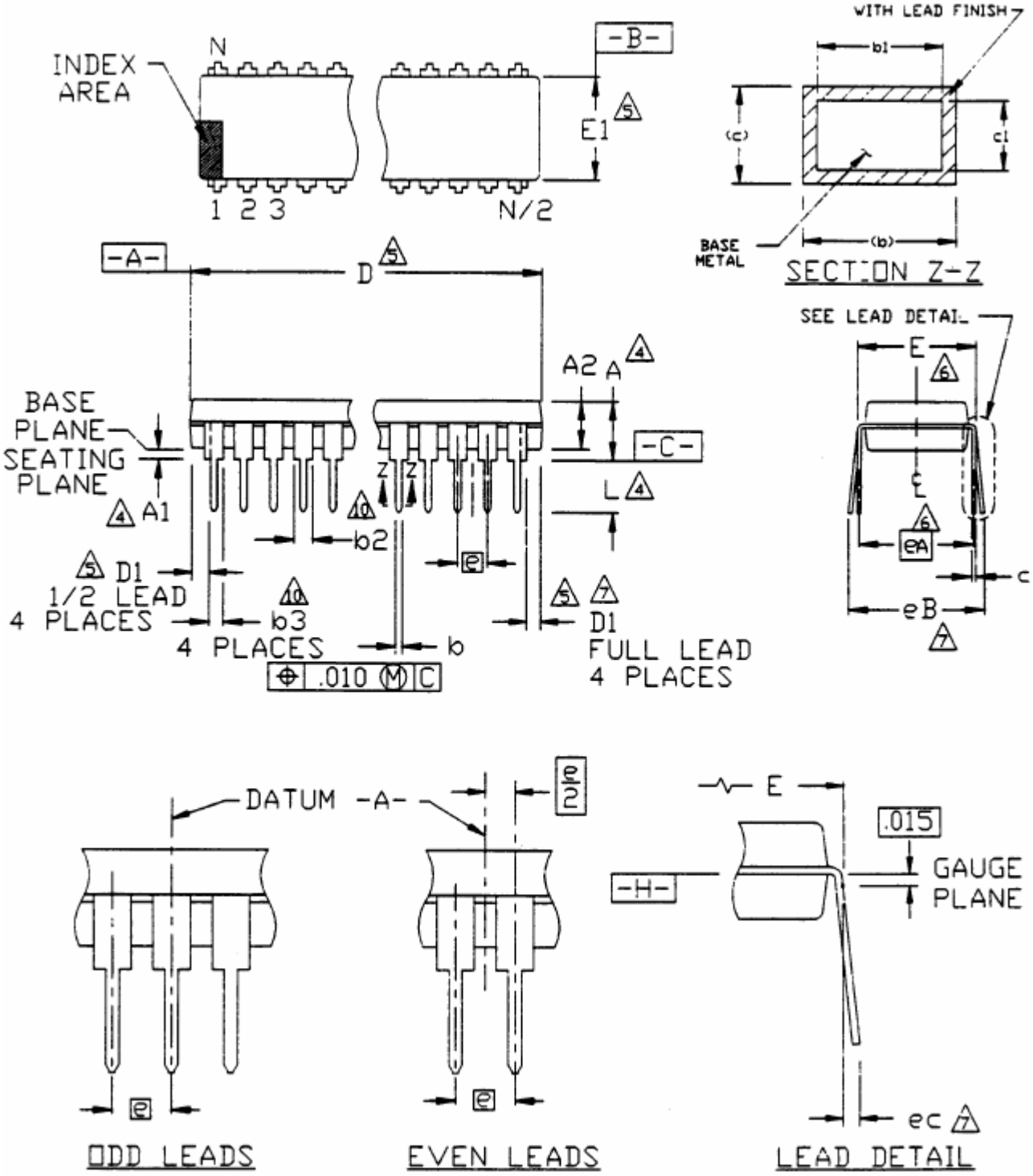

Tel: 886-2-66296288
Fax: 886-2-29174598
URL: http://www.princeton.com.tw

Symbol	Min.	Nom.	Max.
A	-	-	0.210
A1	0.015	-	-
A2	0.115	0.130	0.195
b	0.014	0.018	0.022
b1	0.014	0.018	0.020
b2	0.045	0.060	0.070
b3	0.030	0.039	0.045
c	0.008	0.010	0.014
c1	0.008	0.010	0.011
D	0.735	0.755	0.775
D1	0.005	-	-
E	0.300	0.310	0.325
E1	0.240	0.250	0.280
e	0.100 BSC.		
eA	0.300 BSC.		
eB	-	-	0.430
eC	0.000	-	0.060
L	0.115	0.130	0.150

Notes:
1. All dimensions are in INCHS.
2. Dimensioning and tolerancing per ANSI Y14.5M-1982.
3. Dimensions “A”, “A1” and “L” are measured with the package seated in JEDEC Seating Plane Gauge GS-3.
4. “D”, “D1” and “E1” dimensions do not include mold flash or protrusions. Mold flash or protrusions shall not exceed 0.010 inch.
5. “E” and “eA” measured with the leads constrained to be perpendicular to datum -c-.
6. “eB” and “eC” are measured at the lead tips with the loads unconstrained.
7. “N” is the number of terminal positions. (N=16)
8. Pointed or rounded lead tips are preferred to ease insertion.
9. “b2” and “b3” maximum dimensions are not include dambar protrusions. Dambar protrusions shall not exceed 0.010 inch (0.25 mm).
10. Variation BA has a b3 dimension and is 1/2 lead package.
11. Distance between leads including dambar protrusions to be 0.005 inch minimum.
12. Datum plane -H- coincident with the bottom of lead, where lead exits body.
13. Refer to JEDEC MS-001 Variation BB.

JEDEC is the trademark of JEDEC SOLID STATE TECHNOLOGY ASSOCIATION.

8 PINS, SOP, 150MIL

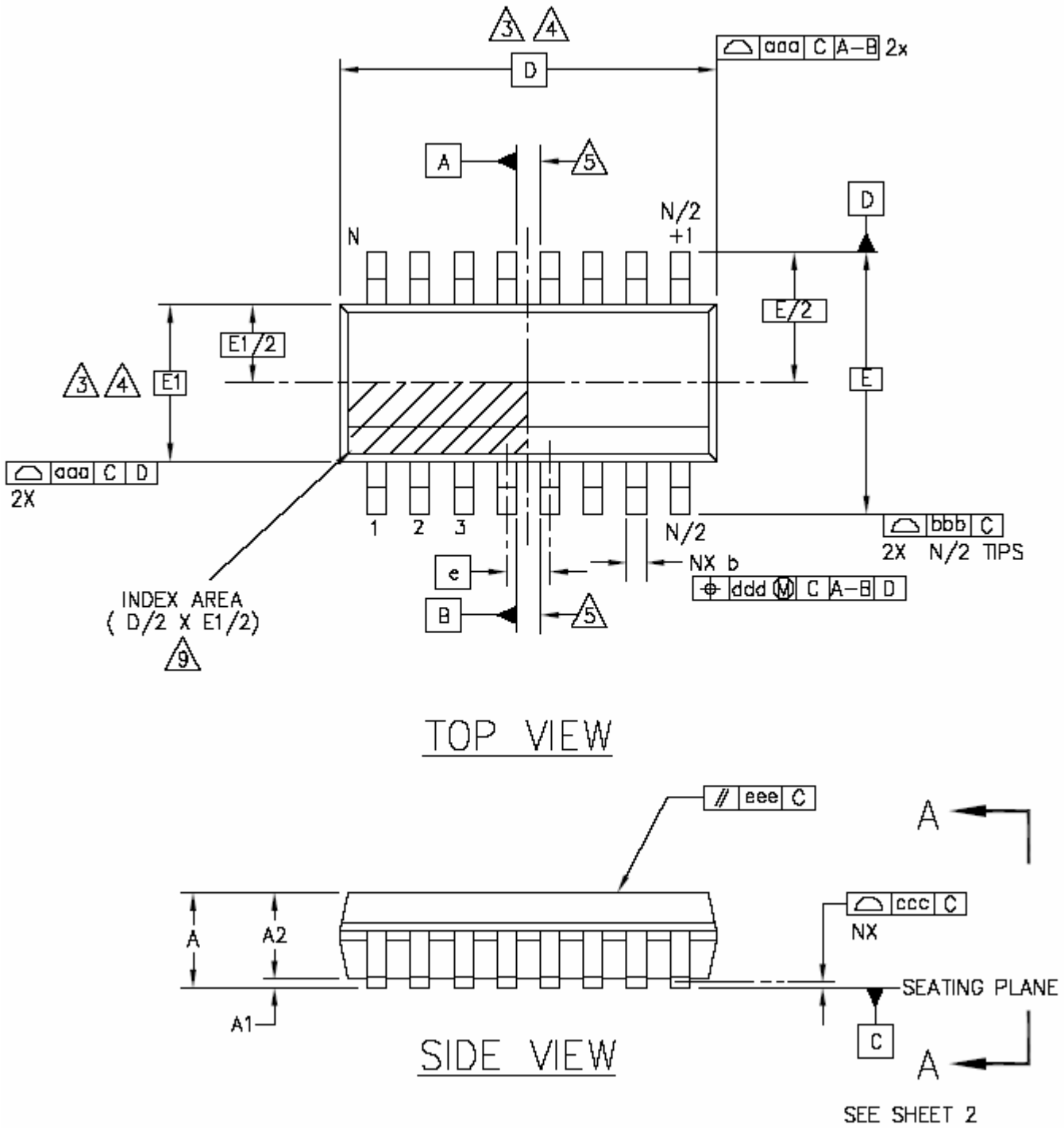

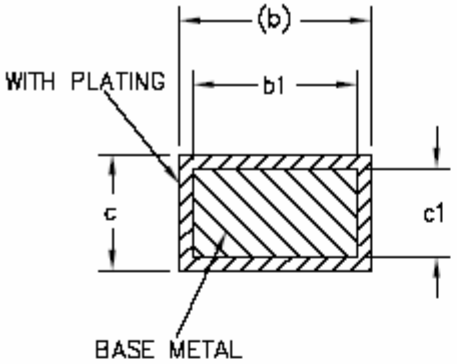

SECTION B–B
7

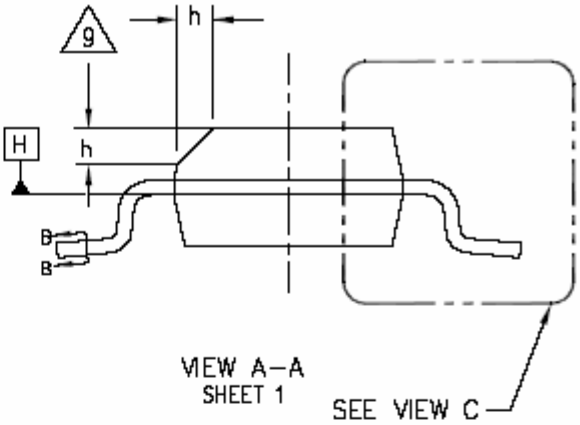

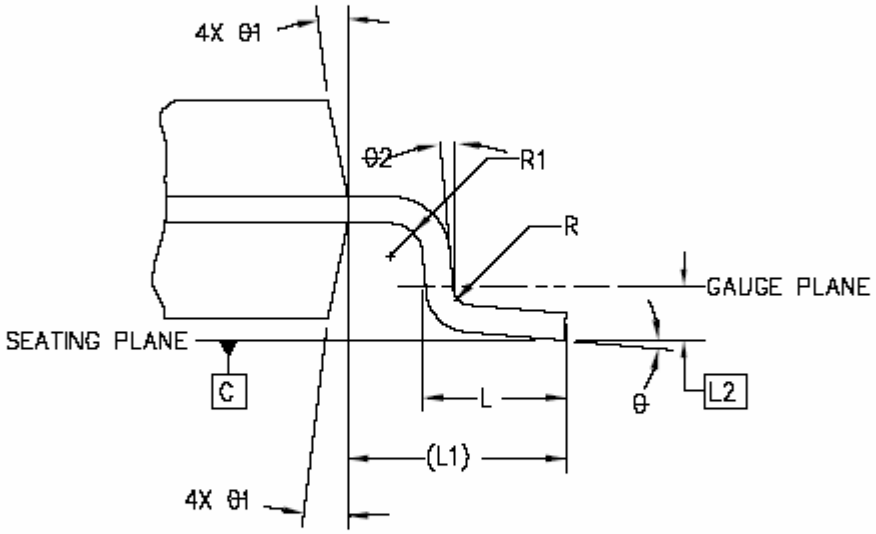

VIEW C

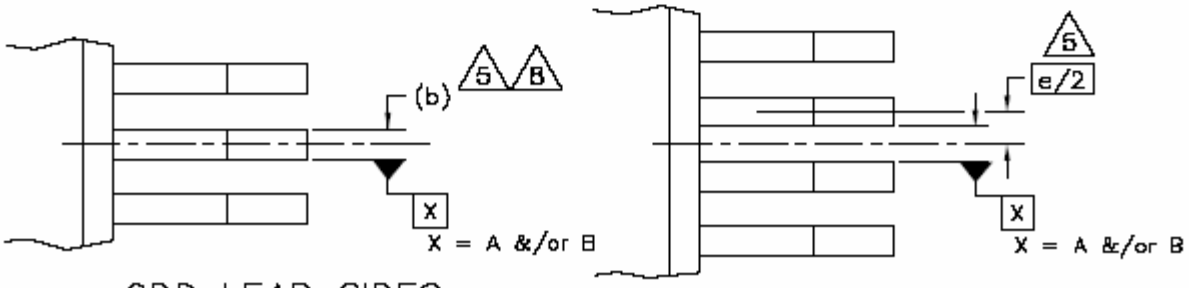

ODD LEAD SIDES
TOPVIEW

EVEN LEAD SIDES
TOPVIEW

Tel: 886-2-66296288
Fax: 886-2-29174598
URL: http://www.princeton.com.tw

Symbol	Min.	Typ.	Max.
A	1.35	-	1.75
A1	0.10	-	0.25
A2	1.25	-	1.65
b	0.31	-	0.51
b1	0.28	-	0.48
c	0.17	-	0.25
c1	0.17	-	0.23
D	4.90 BSC.		
E	6.00 BSC.		
E1	3.90 BSC.		
e	1.27 BSC.		
L	0.40	-	1.27
L1	1.04 REF.		
L2	0.25 BSC.		
R	0.07	-	-
R1	0.07		-
h	0.25	-	0.50
θ	0°	-	8°
θ1	5°	-	15°
θ2	0°	-	-

Notes:
1. Dimensioning and tolerancing per ANSI Y 14.5M-1994
2. Controlling Dimension: MILLIMETERS.
3. Dimension D does not include mold flash protrusions or gate burrs. Mold flash, protrusions or gate burrs shall not exceed 0.15 mm (0.006 in) per end. Dimension E1 does not include interlead flash or protrusion. Interlead flash or protrusion shall not exceed 0.25mm per side. D and E1 dimensions are determined at datum H.
4. The package top may be smaller than the package bottom. Dimensions D and E1 are determined at the outermost extremes of the plastic body exclusive of mold flash, tie bar burrs, gate burrs and interlead flash, but including any mismatch between the top and bottom of the plastic body.
5. Datums A & B to be determined at datum H.
6. N is the number of terminal positions. (N=8)
7. The dimensions apply to the flat section of the lead between 0.10 to 0.25mm from the lead tip.
8. Dimension “b” does not include dambar protrusion. Allowable dambar protrusion shall be 0.10mm total in excess of the “b” dimension at maximum material condition. The dambar cannot be located on the lower radius of the foot.
9. This chamfer feature is optional. If it is not present, then a pin 1 identifier must be located within the index area indicated.
10. Refer to JEDEC MS-012, Variation AA.

JEDEC is the registered trademark of JEDEC SOLID STATE TECHNOLOGY ASSOCIATION.

16 PINS, SOP, 150MIL

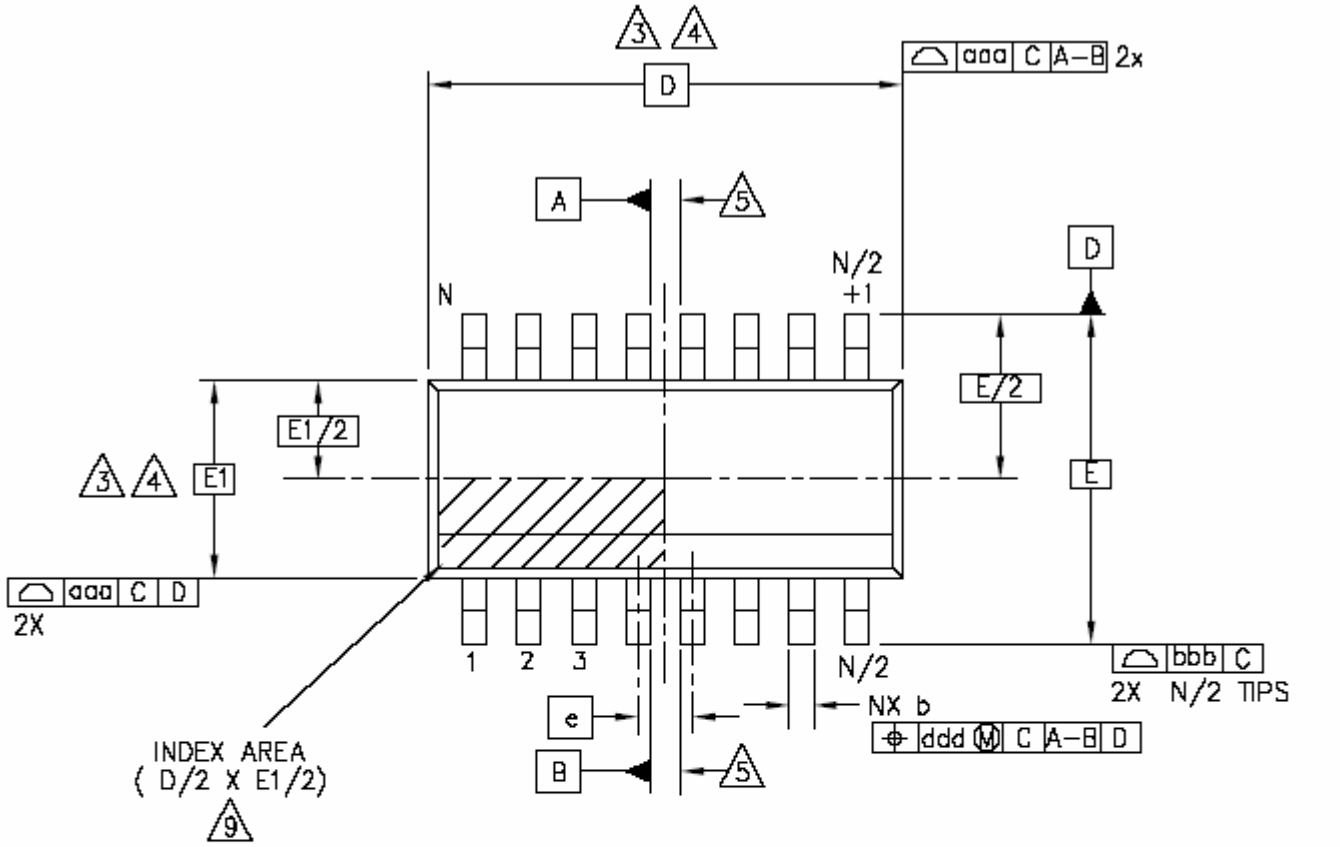

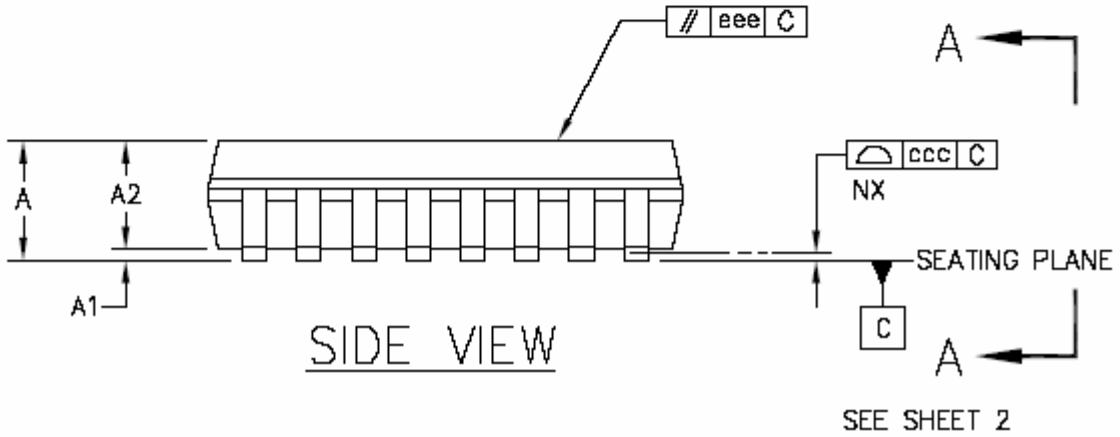

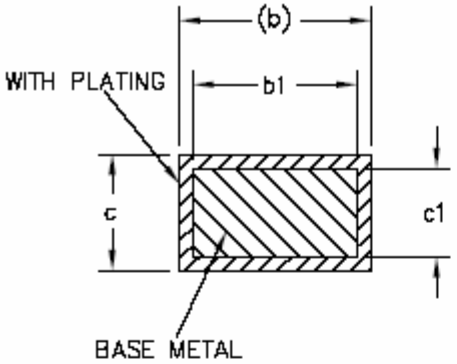

SECTION B–B

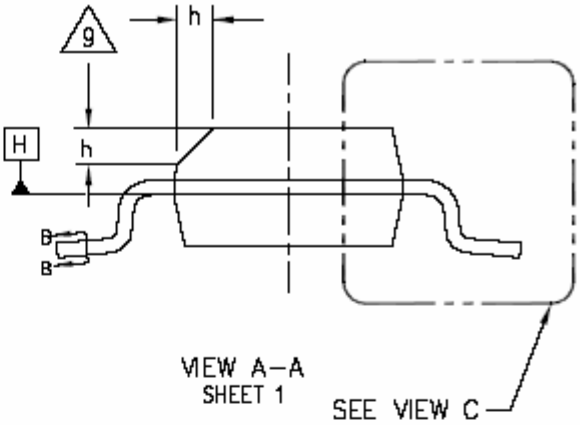

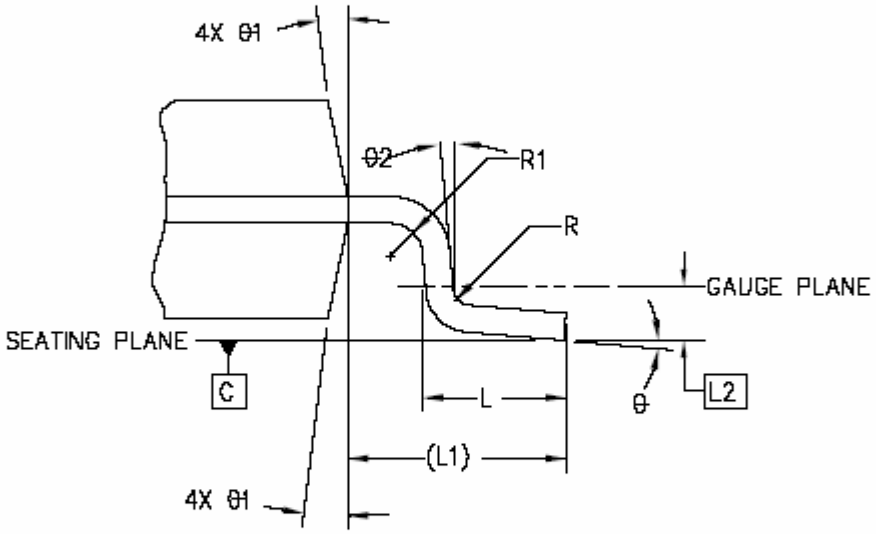

VIEW C

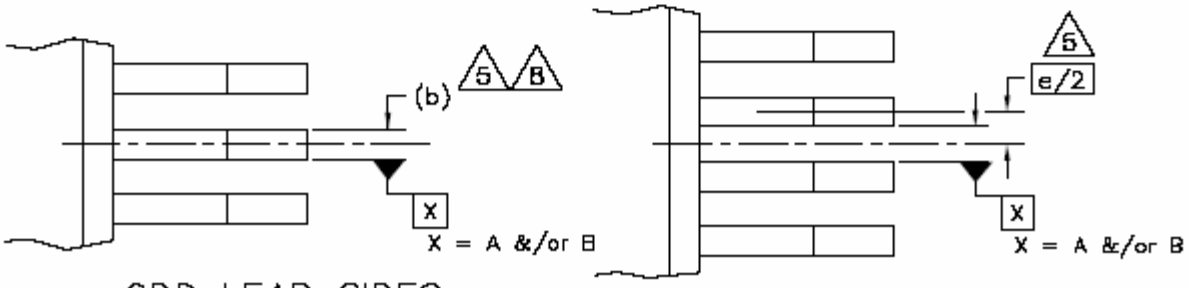

ODD LEAD SIDES
TOPVIEW

EVEN LEAD SIDES
TOPVIEW

Tel: 886-2-66296288
Fax: 886-2-29174598
URL: http://www.princeton.com.tw

Symbol	Min.	Typ.	Max.
A	1.35	-	1.75
A1	0.10	-	0.25
A2	1.25	-	1.65
b	0.31	-	0.51
b1	0.28	-	0.48
c	0.17	-	0.25
c1	0.17	-	0.23
D	9.90 BSC.		
E	6.00 BSC.		
E1	3.90 BSC.		
e	1.27 BSC.		
L	0.40	-	1.27
L1	1.04 REF.		
L2	0.25 BSC.		
R	0.07	-	-
R1	0.07		-
h	0.25	-	0.50
θ	0°	-	8°
θ1	5°	-	15°
θ2	0°	-	-

Notes:
1. Dimensioning and tolerancing per ANSI Y 14.5M-1994
2. Controlling Dimension: MILLIMETERS.
3. Dimension D does not include mold flash protrusions or gate burrs. Mold flash, protrusions or gate burrs shall not exceed 0.15 mm (0.006 in) per end. Dimension E1 does not include interlead flash or protrusion. Interlead flash or protrusion shall not exceed 0.25mm per side. D and E1 dimensions are determined at datum H.
4. The package top may be smaller than the package bottom. Dimensions D and E1 are determined at the outermost extremes of the plastic body exclusive of mold flash, tie bar burrs, gate burrs and interlead flash, but including any mismatch between the top and bottom of the plastic body.
5. Datums A & B to be determined at datum H.
6. N is the number of terminal positions. (N=8)
7. The dimensions apply to the flat section of the lead between 0.10 to 0.25mm from the lead tip.
8. Dimension “b” does not include dambar protrusion. Allowable dambar protrusion shall be 0.10mm total in excess of the “b” dimension at maximum material condition. The dambar cannot be located on the lower radius of the foot.
9. This chamfer feature is optional. If it is not present, then a pin 1 identifier must be located within the index area indicated.
10. Refer to JEDEC MS-012, Variation AC

JEDEC is the registered trademark of JEDEC SOLID STATE TECHNOLOGY ASSOCIATION.

Мы молодая и активно развивающаяся компания в области поставок электронных компонентов. Мы поставляем электронные компоненты отечественного и импортного производства напрямую от производителей и с крупнейших складов мира.

Благодаря сотрудничеству с мировыми поставщиками мы осуществляем комплексные и плановые поставки широчайшего спектра электронных компонентов.

Собственная эффективная логистика и склад в обеспечивает надежную поставку продукции в точно указанные сроки по всей России.

Мы осуществляем техническую поддержку нашим клиентам и предпродажную проверку качества продукции. На все поставляемые продукты мы предоставляем гарантию .

Осуществляем поставки продукции под контролем ВП МО РФ на предприятия военно-промышленного комплекса России , а также работаем в рамках 275 ФЗ с открытием отдельных счетов в уполномоченном банке. Система менеджмента качества компании соответствует требованиям ГОСТ ISO 9001.

Минимальные сроки поставки, гибкие цены, неограниченный ассортимент и индивидуальный подход к клиентам являются основой для выстраивания долгосрочного и эффективного сотрудничества с предприятиями радиоэлектронной промышленности, предприятиями ВПК и научно-исследовательскими институтами России.

С нами вы становитесь еще успешнее!

Наши контакты:

Телефон: +7 812 627 14 35

Электронная почта: sales@st-electron.ru

Адрес: 198099, Санкт-Петербург, Промышленная ул, дом № 19, литера Н, помещение 100-Н Офис 331