Data sheet acquired from Harris Semiconductor
SCHS085E – Revised September 2003

CMOS Programmable Timer High Voltage Types (20V Rating)

Features

- **Low Symmetrical Output Resistance, Typically 100Ω at V_{DD} = 15V**
- **Built-In Low-Power RC Oscillator**
- **Oscillator Frequency Range . . . . . DC to 100kHz**
- **External Clock (Applied to Pin 3) can be Used Instead of Oscillator**
- **Operates as 2^N Frequency Divider or as a Single-Transition Timer**
- **Q/$\overline{Q}$ Select Provides Output Logic Level Flexibility**
- **AUTO or MASTER RESET Disables Oscillator During Reset to Reduce Power Dissipation**
- **Operates With Very Slow Clock Rise and Fall Times**
- **Capable of Driving Six Low Power TTL Loads, Three Low-Power Schottky Loads, or Six HTL Loads Over the Rated Temperature Range**
- **Symmetrical Output Characteristics**
- **100% Tested for Quiescent Current at 20V**
- **5V, 10V, and 15V Parametric Ratings**
- **Meets All Requirements of JEDEC Standard No. 13B, "Standard Specifications for Description of 'B' Series CMOS Devices"**

Description

CD4541B programmable timer consists of a 16-stage binary counter, an oscillator that is controlled by external R-C components (2 resistors and a capacitor), an automatic power-on reset circuit, and output control logic. The counter increments on positive-edge clock transitions and can also be reset via the MASTER RESET input.

Pinout

CD4541B
(CERDIP, PDIP, SOIC, SOP, TSSOP)

TOP VIEW

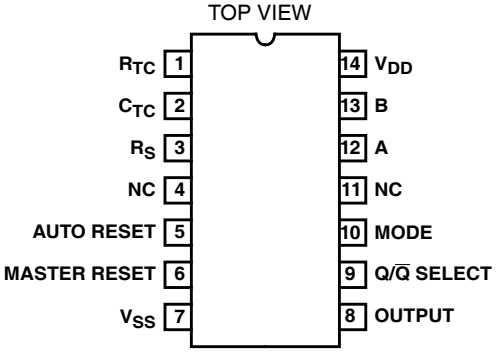

The output from this timer is the Q or $\overline{Q}$ output from the 8th, 10th, 13th, or 16th counter stage. The desired stage is chosen using time-select inputs A and B (see Frequency Select Table).

The output is available in either of two modes selectable via the MODE input, pin 10 (see Truth Table). When this MODE input is a logic "1", the output will be a continuous square wave having a frequency equal to the oscillator frequency divided by 2^N. With the MODE input set to logic "0" and after a MASTER RESET is initiated, the output (assuming Q output has been selected) changes from a low to a high state after 2^{N-1} counts and remains in that state until another MASTER RESET pulse is applied or the MODE input is set to a logic "1".

Timing is initialized by setting the AUTO RESET input (pin 5) to logic "0" and turning power on. If pin 5 is set to logic "1", the AUTO RESET circuit is disabled and counting will not start until after a positive MASTER RESET pulse is applied and returns to a low level. The AUTO RESET consumes an appreciable amount of power and should not be used if low-power operation is desired. For reliable automatic power-on reset, V_{DD} should be greater than 5V.

The RC oscillator, shown in Figure 2, oscillates with a frequency determined by the RC network and is calculated using:

$$f = \frac{1}{2.3\ R_{TC}C_{TC}}$$

Where f is between 1kHz and 100kHz and $R_S \geq 10k\Omega$ and $\approx 2R_{TC}$

Ordering Information

PART NUMBER	TEMP. RANGE (°C)	PACKAGE
CD4541BF3A	-55 to 125	14 Ld CERDIP
CD4541BE	-55 to 125	14 Ld PDIP
CD4541BM	-55 to 125	14 Ld SOIC
CD4541BMT	-55 to 125	14 Ld SOIC
CD4541BM96	-55 to 125	14 Ld SOIC
CD4541BNSR	-55 to 125	14 Ld SOP
CD4541BPW	-55 to 125	14 Ld TSSOP
CD4541BPWR	-55 to 125	14 Ld TSSOP

NOTE: When ordering, use the entire part number. The suffixes 96 and R denote tape and reel. The suffix T denotes a small-quantity reel of 250.

CAUTION: These devices are sensitive to electrostatic discharge. Users should follow proper IC Handling Procedures.

Copyright © 2003, Texas Instruments Incorporated

Functional Diagram

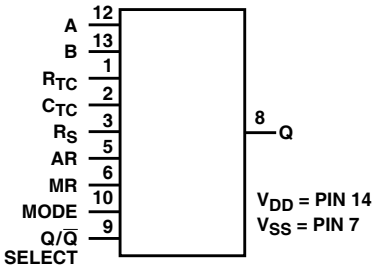

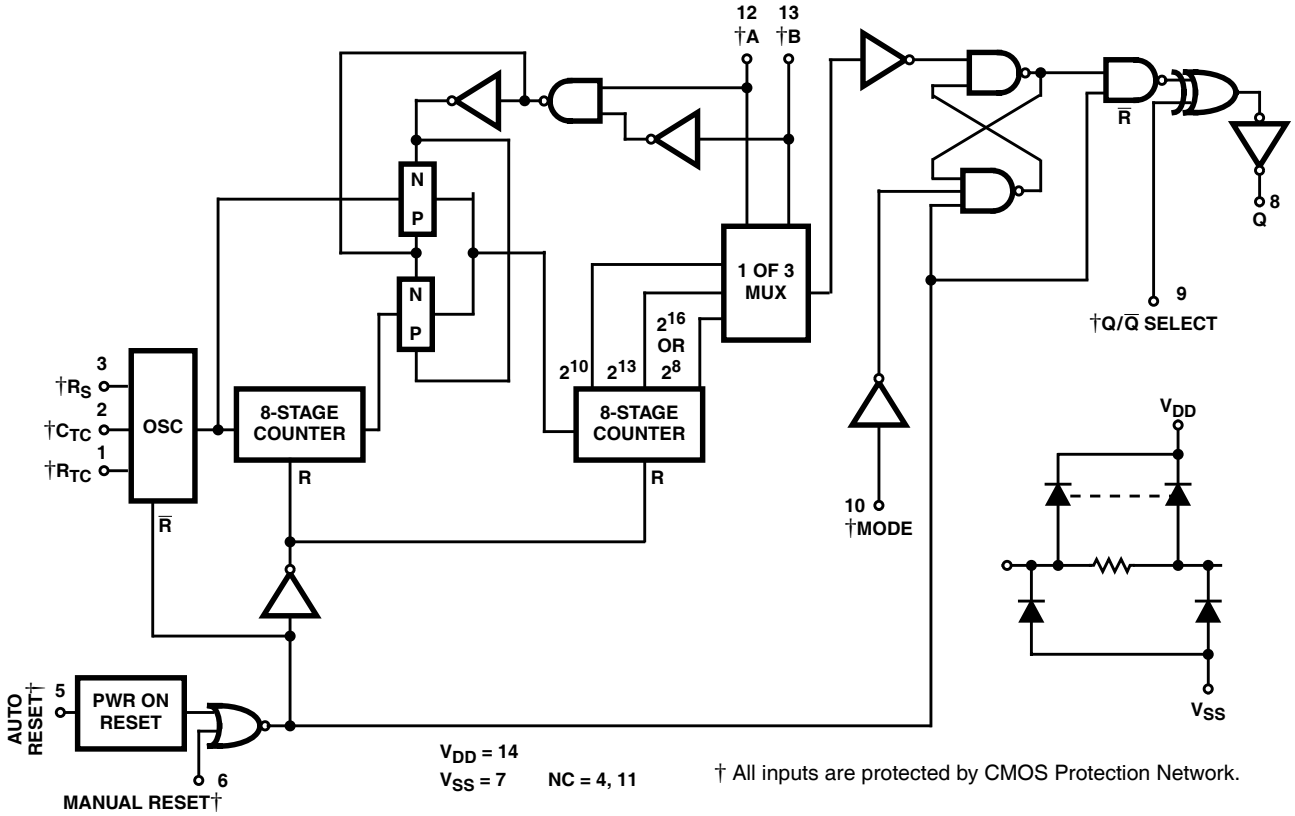

FIGURE 1.

FREQUENCY SELECTION TABLE

A	B	NO. OF STAGES N	COUNT 2^N
0	0	13	8192
0	1	10	1024
1	0	8	256
1	1	16	65536

TRUTH TABLE

PIN	STATE	
	0	1
5	Auto Reset On	Auto Reset Disable
6	Master Reset Off	Master Reset On
9	Output Initially Low After Reset (Q)	Output Initially High After Reset (Q̄)
10	Single Transition Mode	Recycle Mode

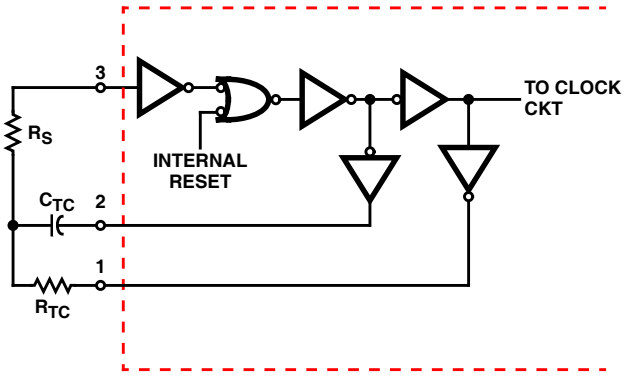

FIGURE 2. RC OSCILLATOR CIRCUIT

Absolute Maximum Ratings

DC Supply - Voltage Range, V_{DD}
Voltages Referenced to V_{SS} Terminal . . . . . -0.5V to +20V
Input Voltage Range, All Inputs . . . . . -0.5V to V_{DD} +0.5V
DC Input Current, Any One Input . . . . . ±10mA
Device Dissipation Per Output Transistor
For T_A = Full Package Temperature Range
(All Package Types) 100mW

Operating Conditions

Temperature Range T_A . . . . . -55°C to 125°C
Supply Voltage Range
For T_A = Full Package Temperature Range . . . . . 3V (Min), 18V (Typ)

Thermal Information

Package Thermal Impedance, θ_{JA} (see Note 1)
PDIP package . . . . . 80°C/W
SOIC package . . . . . 86°C/W
SOP package . . . . . 76°C/W
TSSOP package . . . . . 113°C/W
Maximum Junction Temperature (Plastic Package) . . . . . 150°C
Maximum Storage Temperature Range (T_{STG}) . . . -65°C to 150°C
Maximum Lead Temperature (Soldering 10s)
At Distance 1/16in ± 1/32in (1.59mm ±0.79mm)
from case for 10s Maximum . . . . . 265°C
(SOIC - Lead Tips Only)

CAUTION: Stresses above those listed in "Absolute Maximum Ratings" may cause permanent damage to the device. This is a stress only rating and operation of the device at these or any other conditions above those indicated in the operational sections of this specification is not implied.

NOTE:

1. The package thermal impedance is calculated in accordance with JESD 51-7.

Electrical Specifications

PARAMETER	CONDITIONS			LIMITS AT INDICATED TEMPERATURES (°C)							UNITS
								25			
	V_O (V)	V_{IN} (V)	V_{DD} (V)	-55	-40	85	125	MIN	TYP	MAX	
Quiescent Device Current, (Note 2) I_{DD} (Max)	-	0, 5	5	5	5	150	150	-	0.04	5	µA
	-	0, 10	10	10	10	300	300	-	0.04	10	µA
	-	0, 15	15	20	20	600	600	-	0.04	20	µA
	-	0, 20	20	100	100	3000	3000	-	0.08	100	µA
Output Low (Sink) Current I_{OL} (Min)	0.4	0, 5	5	1.9	1.85	1.26	1.08	1.55	3.1	-	mA
	0.5	0, 10	10	5	4.8	3.3	2.8	4	8	-	mA
	1.5	0, 15	15	12.6	12	8.4	7.2	10	20	-	mA
Output High (Source) Current, I_{OH} (Min)	4.6	0, 5	5	-1.9	-1.85	-1.26	-1.08	-1.55	-3.1	-	mA
	2.5	0, 5	5	-6.2	-6	-4.1	-3	-5	-10	-	mA
	9.5	0, 10	10	-5	-4.8	-3.3	-2.8	-4	-8	-	mA
	13.5	0, 15	15	-12.6	-12	-8.4	-7.2	-10	-20	-	mA
Output Voltage: Low-Level, V_{OL} (Max)	-	0, 5	5	-	0.05			-	0	0.05	V
	-	0, 10	10	-	0.05			-	0	0.05	V
	-	0, 15	15	-	0.05			-	0	0.05	V
Output Voltage: High-Level, V_{OH} (Min)	-	0, 5	5	-	4.95			4.95	5	-	V
	-	0, 10	10	-	9.95			9.95	10	-	V
	-	0, 15	15	-	14.95			14.95	15	-	V
Input Low Voltage, V_{IL} (Max)	0.5, 4.5	-	5	-	1.5			-	-	1.5	V
	1, 9	-	10	-	3			-	-	3	V
	1.5, 13.5	-	15	-	4			-	-	4	V

Electrical Specifications (Continued)

PARAMETER	CONDITIONS			LIMITS AT INDICATED TEMPERATURES (°C)							UNITS
	V_O (V)	V_{IN} (V)	V_{DD} (V)	-55	-40	85	125	25 MIN	25 TYP	25 MAX	
Input High Voltage, V_{IH} (Min)	0.5, 4.5	-	5	-		3.5		3.5	-	-	V
	1, 9	-	10	-		7		7	-	-	V
	1.5, 13.5	-	15	-		11		11	-	-	V
Input Current, I_{IN} (Max)	-	0, 18	18	±0.1	±0.1	±1	±1	-	$\pm 10^{-5}$	±0.1	µA

NOTE:

2. With AUTO RESET enabled, additional current drain at 25°C is:
   7µA (Typ), 200µA (Max) at 5V;
   30µA (Typ), 350µA (Max) at 10V;
   80µA (Typ), 500µA (Max) at 15V

Dynamic Electrical Specifications

T_A = 25°C, Input t_r, t_f = 20ns, C_L = 50pF, R_L = 200kΩ

PARAMETER	SYMBOL	V_{DD} (V)	MIN	TYP	MAX	UNITS
Propagation Delay Times Clock to Q	(2^8) t_{PHL}, t_{PLH}	5	-	3.5	10.5	µs
		10	-	1.25	3.8	µs
		15	-	0.9	2.9	µs
	(2^{16}) t_{PHL}, t_{PLH}	5	-	6.0	18	µs
		10	-	3.5	10	µs
		15	-	2.5	7.5	µs
Transition Time	t_{THL}	5	-	100	200	ns
		10	-	50	100	ns
		15	-	40	80	ns
	t_{THL}	5	-	180	360	ns
		10	-	90	180	ns
		15	-	65	130	ns
MASTER RESET, CLOCK Pulse Width		5	900	300	-	ns
		10	300	100	-	ns
		15	225	85	-	ns
Maximum Clock Pulse Input Frequency	f_{CL}	5	-	1.5	-	MHz
		10	-	4	-	MHz
		15	-	6	-	MHz
Maximum Clock Pulse Input Rise or Fall time	t_r, t_f	5, 10, 15	Unlimited			µs

Digital Timer Application

A positive pulse on MASTER RESET resets the counters and latch. The output goes high and remains high until the number of pulses, selected by A and B, are counted. This circuit is retriggerable and is as accurate as the input frequency. If additional accuracy is desired, an external clock can be used on pin 3. A setup time equal to the width of the one-shot output is required immediately following initial power up, during which time the output will be high.

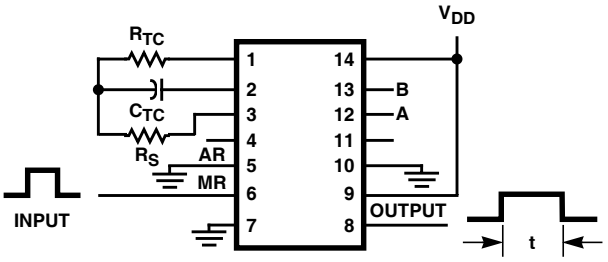

FIGURE 3. DIGITAL TIMER APPLICATION CIRCUIT

PACKAGING INFORMATION

Orderable Device	Status [1]	Package Type	Package Drawing	Pins	Package Qty	Eco Plan [2]	Lead/Ball Finish	MSL Peak Temp [3]
CD4541BE	ACTIVE	PDIP	N	14	25	Pb-Free (RoHS)	CU NIPDAU	N / A for Pkg Type
CD4541BEE4	ACTIVE	PDIP	N	14	25	Pb-Free (RoHS)	CU NIPDAU	N / A for Pkg Type
CD4541BF	ACTIVE	CDIP	J	14	1	TBD	A42	N / A for Pkg Type
CD4541BF3A	ACTIVE	CDIP	J	14	1	TBD	A42	N / A for Pkg Type
CD4541BM	ACTIVE	SOIC	D	14	50	Green (RoHS & no Sb/Br)	CU NIPDAU	Level-1-260C-UNLIM
CD4541BM96	ACTIVE	SOIC	D	14	2500	Green (RoHS & no Sb/Br)	CU NIPDAU	Level-1-260C-UNLIM
CD4541BM96E4	ACTIVE	SOIC	D	14	2500	Green (RoHS & no Sb/Br)	CU NIPDAU	Level-1-260C-UNLIM
CD4541BM96G4	ACTIVE	SOIC	D	14	2500	Green (RoHS & no Sb/Br)	CU NIPDAU	Level-1-260C-UNLIM
CD4541BME4	ACTIVE	SOIC	D	14	50	Green (RoHS & no Sb/Br)	CU NIPDAU	Level-1-260C-UNLIM
CD4541BMG4	ACTIVE	SOIC	D	14	50	Green (RoHS & no Sb/Br)	CU NIPDAU	Level-1-260C-UNLIM
CD4541BMT	ACTIVE	SOIC	D	14	250	Green (RoHS & no Sb/Br)	CU NIPDAU	Level-1-260C-UNLIM
CD4541BMTE4	ACTIVE	SOIC	D	14	250	Green (RoHS & no Sb/Br)	CU NIPDAU	Level-1-260C-UNLIM
CD4541BMTG4	ACTIVE	SOIC	D	14	250	Green (RoHS & no Sb/Br)	CU NIPDAU	Level-1-260C-UNLIM
CD4541BNSR	ACTIVE	SO	NS	14	2000	Green (RoHS & no Sb/Br)	CU NIPDAU	Level-1-260C-UNLIM
CD4541BNSRE4	ACTIVE	SO	NS	14	2000	Green (RoHS & no Sb/Br)	CU NIPDAU	Level-1-260C-UNLIM
CD4541BNSRG4	ACTIVE	SO	NS	14	2000	Green (RoHS & no Sb/Br)	CU NIPDAU	Level-1-260C-UNLIM
CD4541BPW	ACTIVE	TSSOP	PW	14	90	Green (RoHS & no Sb/Br)	CU NIPDAU	Level-1-260C-UNLIM
CD4541BPWE4	ACTIVE	TSSOP	PW	14	90	Green (RoHS & no Sb/Br)	CU NIPDAU	Level-1-260C-UNLIM
CD4541BPWG4	ACTIVE	TSSOP	PW	14	90	Green (RoHS & no Sb/Br)	CU NIPDAU	Level-1-260C-UNLIM
CD4541BPWR	ACTIVE	TSSOP	PW	14	2000	Green (RoHS & no Sb/Br)	CU NIPDAU	Level-1-260C-UNLIM
CD4541BPWRE4	ACTIVE	TSSOP	PW	14	2000	Green (RoHS & no Sb/Br)	CU NIPDAU	Level-1-260C-UNLIM
CD4541BPWRG4	ACTIVE	TSSOP	PW	14	2000	Green (RoHS & no Sb/Br)	CU NIPDAU	Level-1-260C-UNLIM

[1] The marketing status values are defined as follows:
ACTIVE: Product device recommended for new designs.
LIFEBUY: TI has announced that the device will be discontinued, and a lifetime-buy period is in effect.
NRND: Not recommended for new designs. Device is in production to support existing customers, but TI does not recommend using this part in a new design.
PREVIEW: Device has been announced but is not in production. Samples may or may not be available.
OBSOLETE: TI has discontinued the production of the device.

(2) Eco Plan - The planned eco-friendly classification: Pb-Free (RoHS), Pb-Free (RoHS Exempt), or Green (RoHS & no Sb/Br) - please check http://www.ti.com/productcontent for the latest availability information and additional product content details.
TBD: The Pb-Free/Green conversion plan has not been defined.
Pb-Free (RoHS): TI's terms "Lead-Free" or "Pb-Free" mean semiconductor products that are compatible with the current RoHS requirements for all 6 substances, including the requirement that lead not exceed 0.1% by weight in homogeneous materials. Where designed to be soldered at high temperatures, TI Pb-Free products are suitable for use in specified lead-free processes.
Pb-Free (RoHS Exempt): This component has a RoHS exemption for either 1) lead-based flip-chip solder bumps used between the die and package, or 2) lead-based die adhesive used between the die and leadframe. The component is otherwise considered Pb-Free (RoHS compatible) as defined above.
Green (RoHS & no Sb/Br): TI defines "Green" to mean Pb-Free (RoHS compatible), and free of Bromine (Br) and Antimony (Sb) based flame retardants (Br or Sb do not exceed 0.1% by weight in homogeneous material)

(3) MSL, Peak Temp. -- The Moisture Sensitivity Level rating according to the JEDEC industry standard classifications, and peak solder temperature.

Important Information and Disclaimer: The information provided on this page represents TI's knowledge and belief as of the date that it is provided. TI bases its knowledge and belief on information provided by third parties, and makes no representation or warranty as to the accuracy of such information. Efforts are underway to better integrate information from third parties. TI has taken and continues to take reasonable steps to provide representative and accurate information but may not have conducted destructive testing or chemical analysis on incoming materials and chemicals. TI and TI suppliers consider certain information to be proprietary, and thus CAS numbers and other limited information may not be available for release.

In no event shall TI's liability arising out of such information exceed the total purchase price of the TI part(s) at issue in this document sold by TI to Customer on an annual basis.

TAPE AND REEL INFORMATION

REEL DIMENSIONS

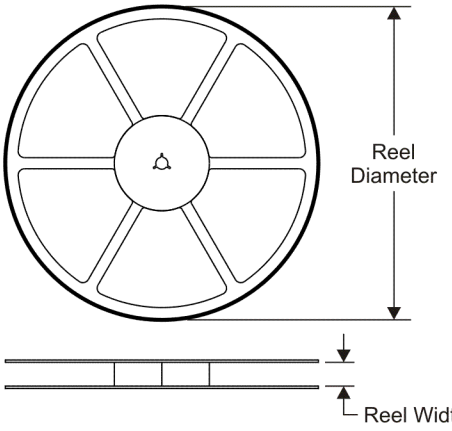

TAPE DIMENSIONS

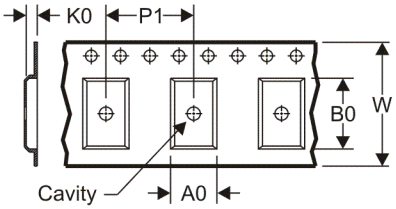

A0	Dimension designed to accommodate the component width
B0	Dimension designed to accommodate the component length
K0	Dimension designed to accommodate the component thickness
W	Overall width of the carrier tape
P1	Pitch between successive cavity centers

QUADRANT ASSIGNMENTS FOR PIN 1 ORIENTATION IN TAPE

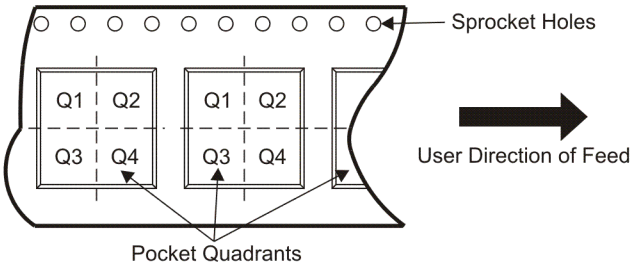

*All dimensions are nominal

Device	Package Type	Package Drawing	Pins	SPQ	Reel Diameter (mm)	Reel Width W1 (mm)	A0 (mm)	B0 (mm)	K0 (mm)	P1 (mm)	W (mm)	Pin1 Quadrant
CD4541BM96	SOIC	D	14	2500	330.0	16.4	6.5	9.0	2.1	8.0	16.0	Q1
CD4541BMT	SOIC	D	14	250	330.0	16.4	6.5	9.0	2.1	8.0	16.0	Q1
CD4541BNSR	SO	NS	14	2000	330.0	16.4	8.2	10.5	2.5	12.0	16.0	Q1
CD4541BPWR	TSSOP	PW	14	2000	330.0	12.4	6.9	5.6	1.6	8.0	12.0	Q1

TAPE AND REEL BOX DIMENSIONS

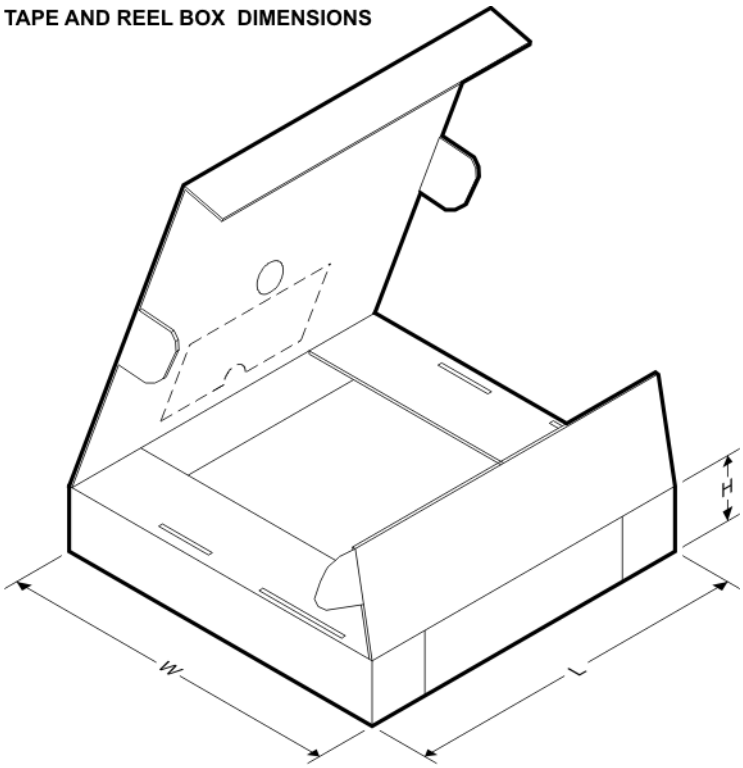

*All dimensions are nominal

Device	Package Type	Package Drawing	Pins	SPQ	Length (mm)	Width (mm)	Height (mm)
CD4541BM96	SOIC	D	14	2500	346.0	346.0	33.0
CD4541BMT	SOIC	D	14	250	346.0	346.0	33.0
CD4541BNSR	SO	NS	14	2000	346.0	346.0	33.0
CD4541BPWR	TSSOP	PW	14	2000	346.0	346.0	29.0

J (R–GDIP–T**) CERAMIC DUAL IN–LINE PACKAGE

14 LEADS SHOWN

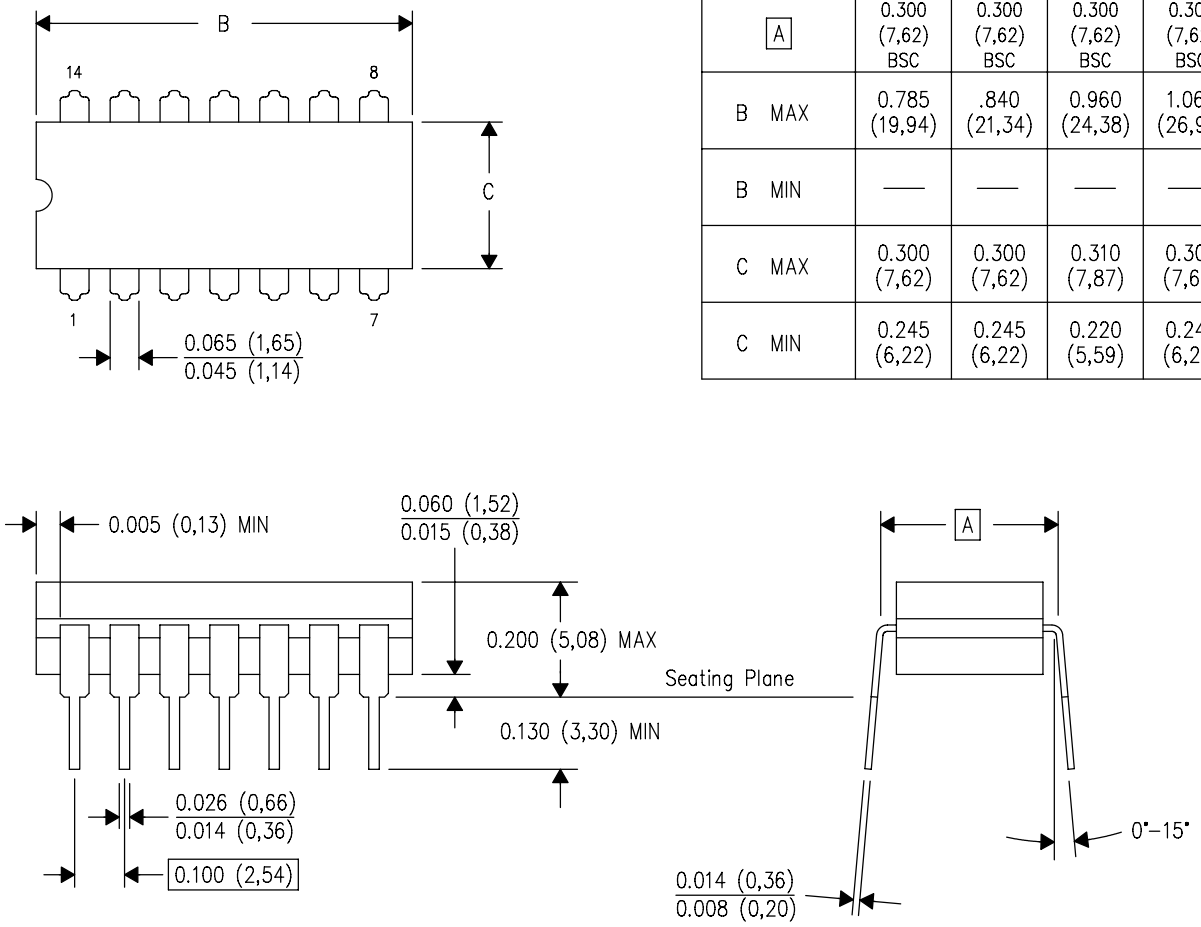

DIM \ PINS **	14	16	18	20
A	0.300 (7,62) BSC	0.300 (7,62) BSC	0.300 (7,62) BSC	0.300 (7,62) BSC
B MAX	0.785 (19,94)	.840 (21,34)	0.960 (24,38)	1.060 (26,92)
B MIN	—	—	—	—
C MAX	0.300 (7,62)	0.300 (7,62)	0.310 (7,87)	0.300 (7,62)
C MIN	0.245 (6,22)	0.245 (6,22)	0.220 (5,59)	0.245 (6,22)

4040083/F 03/03

NOTES:
- A. All linear dimensions are in inches (millimeters).
- B. This drawing is subject to change without notice.
- C. This package is hermetically sealed with a ceramic lid using glass frit.
- D. Index point is provided on cap for terminal identification only on press ceramic glass frit seal only.
- E. Falls within MIL STD 1835 GDIP1–T14, GDIP1–T16, GDIP1–T18 and GDIP1–T20.

N (R–PDIP–T**) PLASTIC DUAL–IN–LINE PACKAGE

16 PINS SHOWN

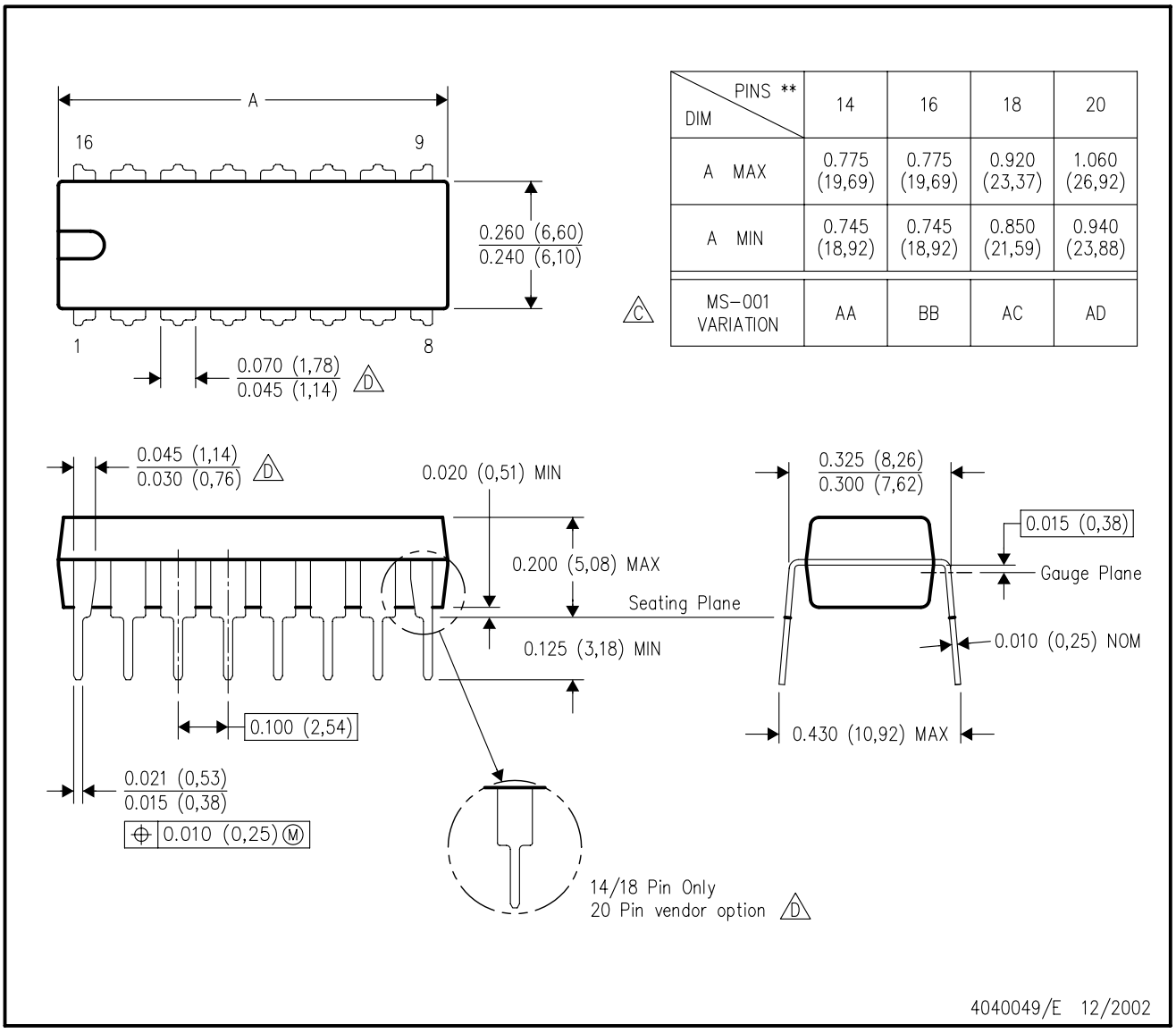

DIM \ PINS **	14	16	18	20
A MAX	0.775 (19,69)	0.775 (19,69)	0.920 (23,37)	1.060 (26,92)
A MIN	0.745 (18,92)	0.745 (18,92)	0.850 (21,59)	0.940 (23,88)
MS–001 VARIATION (C)	AA	BB	AC	AD

NOTES:
A. All linear dimensions are in inches (millimeters).
B. This drawing is subject to change without notice.
C. Falls within JEDEC MS–001, except 18 and 20 pin minimum body length (Dim A).
D. The 20 pin end lead shoulder width is a vendor option, either half or full width.

D (R–PDSO–G14) PLASTIC SMALL–OUTLINE PACKAGE

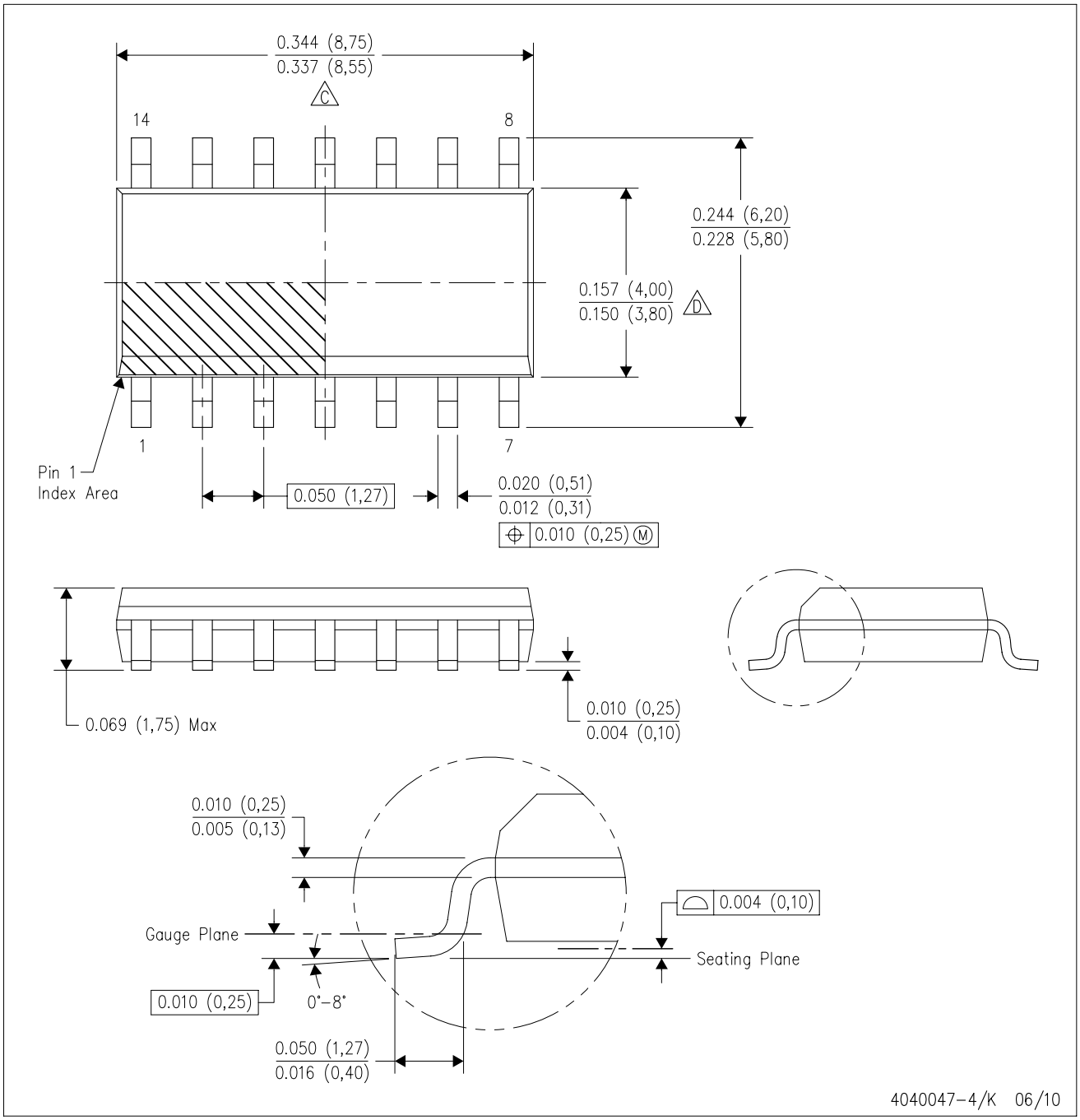

NOTES:
A. All linear dimensions are in inches (millimeters).
B. This drawing is subject to change without notice.
C. Body length does not include mold flash, protrusions, or gate burrs. Mold flash, protrusions, or gate burrs shall not exceed .006 (0,15) per end.
D. Body width does not include interlead flash. Interlead flash shall not exceed .017 (0,43) per side.
E. Reference JEDEC MS–012 variation AB.

D (R–PDSO–G14) PLASTIC SMALL OUTLINE

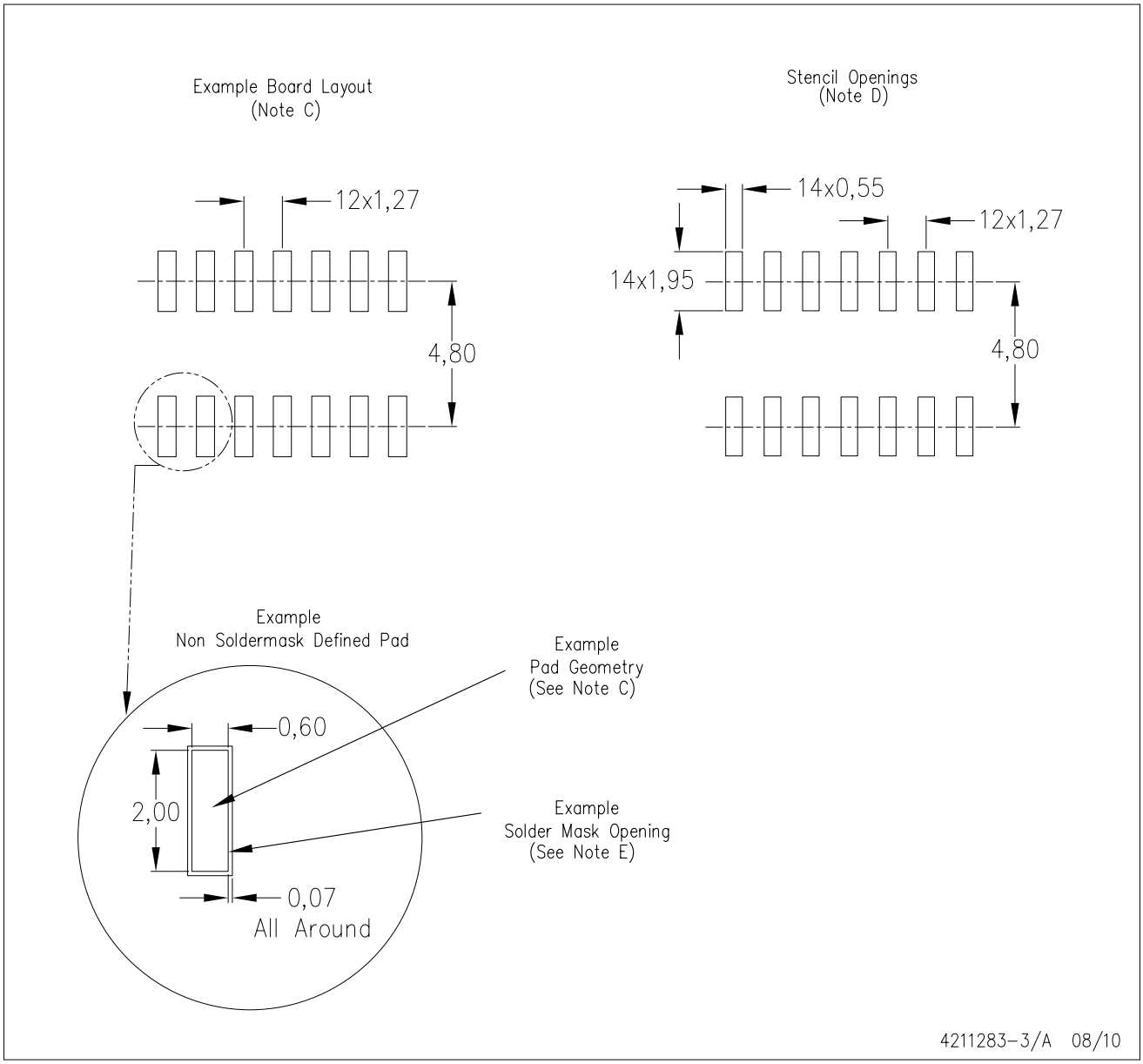

NOTES:
A. All linear dimensions are in millimeters.
B. This drawing is subject to change without notice.
C. Publication IPC–7351 is recommended for alternate designs.
D. Laser cutting apertures with trapezoidal walls and also rounding corners will offer better paste release. Customers should contact their board assembly site for stencil design recommendations. Refer to IPC–7525 for other stencil recommendations.
E. Customers should contact their board fabrication site for solder mask tolerances between and around signal pads.

MECHANICAL DATA

NS (R-PDSO-G)** **PLASTIC SMALL-OUTLINE PACKAGE**

14-PINS SHOWN

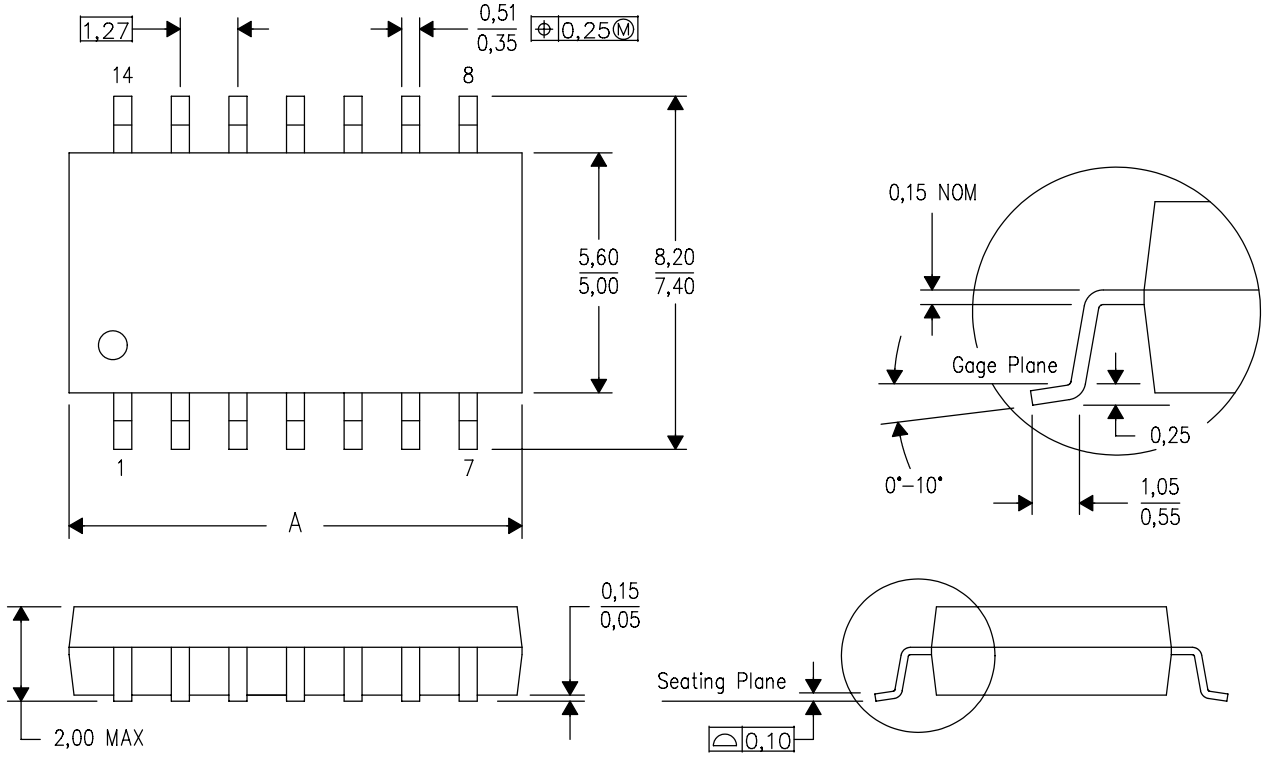

DIM \ PINS **	14	16	20	24
A MAX	10,50	10,50	12,90	15,30
A MIN	9,90	9,90	12,30	14,70

4040062/C 03/03

NOTES:
A. All linear dimensions are in millimeters.
B. This drawing is subject to change without notice.
C. Body dimensions do not include mold flash or protrusion, not to exceed 0,15.

PW (R-PDSO-G)** **PLASTIC SMALL-OUTLINE PACKAGE**

14 PINS SHOWN

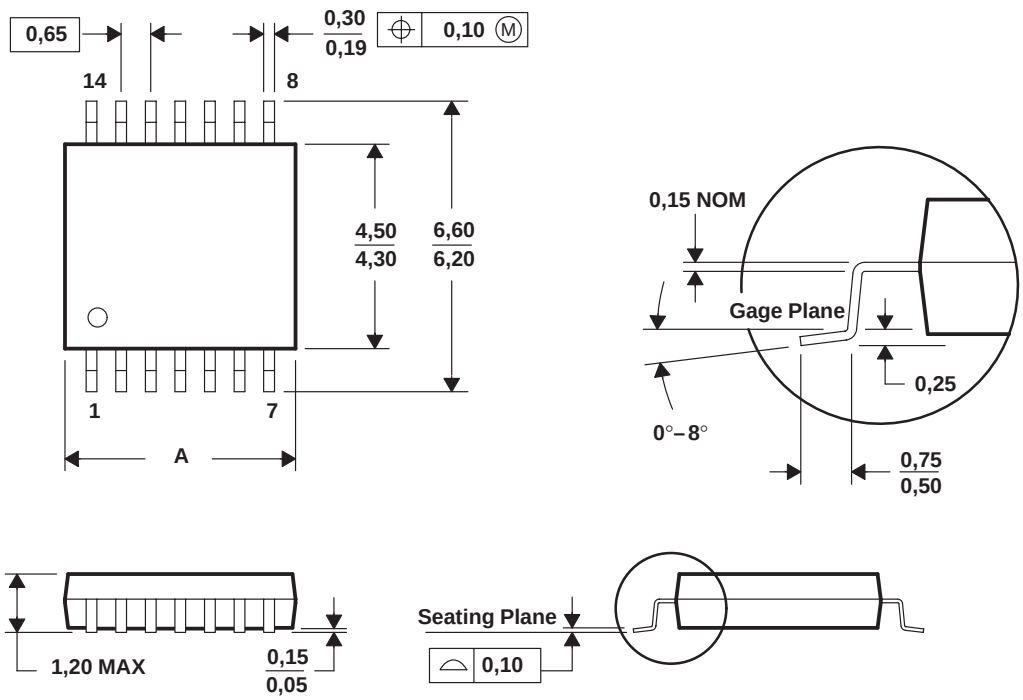

DIM \ PINS **	8	14	16	20	24	28
A MAX	3,10	5,10	5,10	6,60	7,90	9,80
A MIN	2,90	4,90	4,90	6,40	7,70	9,60

4040064/F 01/97

NOTES: A. All linear dimensions are in millimeters.
B. This drawing is subject to change without notice.
C. Body dimensions do not include mold flash or protrusion not to exceed 0,15.
D. Falls within JEDEC MO-153

PW (R–PDSO–G14) PLASTIC SMALL OUTLINE

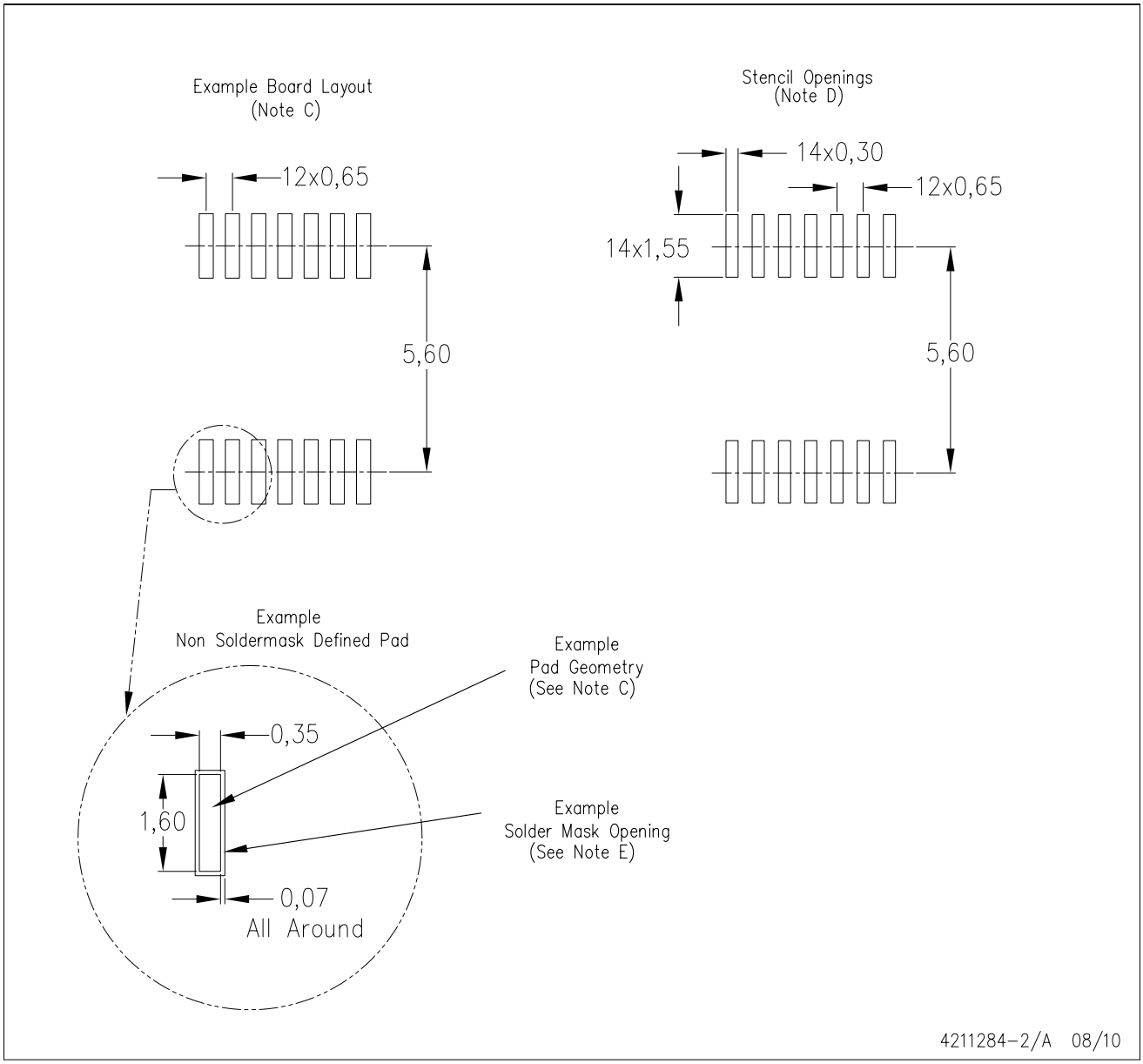

NOTES:
A. All linear dimensions are in millimeters.
B. This drawing is subject to change without notice.
C. Publication IPC–7351 is recommended for alternate designs.
D. Laser cutting apertures with trapezoidal walls and also rounding corners will offer better paste release. Customers should contact their board assembly site for stencil design recommendations. Refer to IPC–7525 for other stencil recommendations.
E. Customers should contact their board fabrication site for solder mask tolerances between and around signal pads.

IMPORTANT NOTICE

Texas Instruments Incorporated and its subsidiaries (TI) reserve the right to make corrections, modifications, enhancements, improvements, and other changes to its products and services at any time and to discontinue any product or service without notice. Customers should obtain the latest relevant information before placing orders and should verify that such information is current and complete. All products are sold subject to TI's terms and conditions of sale supplied at the time of order acknowledgment.

TI warrants performance of its hardware products to the specifications applicable at the time of sale in accordance with TI's standard warranty. Testing and other quality control techniques are used to the extent TI deems necessary to support this warranty. Except where mandated by government requirements, testing of all parameters of each product is not necessarily performed.

TI assumes no liability for applications assistance or customer product design. Customers are responsible for their products and applications using TI components. To minimize the risks associated with customer products and applications, customers should provide adequate design and operating safeguards.

TI does not warrant or represent that any license, either express or implied, is granted under any TI patent right, copyright, mask work right, or other TI intellectual property right relating to any combination, machine, or process in which TI products or services are used. Information published by TI regarding third-party products or services does not constitute a license from TI to use such products or services or a warranty or endorsement thereof. Use of such information may require a license from a third party under the patents or other intellectual property of the third party, or a license from TI under the patents or other intellectual property of TI.

Reproduction of TI information in TI data books or data sheets is permissible only if reproduction is without alteration and is accompanied by all associated warranties, conditions, limitations, and notices. Reproduction of this information with alteration is an unfair and deceptive business practice. TI is not responsible or liable for such altered documentation. Information of third parties may be subject to additional restrictions.

Resale of TI products or services with statements different from or beyond the parameters stated by TI for that product or service voids all express and any implied warranties for the associated TI product or service and is an unfair and deceptive business practice. TI is not responsible or liable for any such statements.

TI products are not authorized for use in safety-critical applications (such as life support) where a failure of the TI product would reasonably be expected to cause severe personal injury or death, unless officers of the parties have executed an agreement specifically governing such use. Buyers represent that they have all necessary expertise in the safety and regulatory ramifications of their applications, and acknowledge and agree that they are solely responsible for all legal, regulatory and safety-related requirements concerning their products and any use of TI products in such safety-critical applications, notwithstanding any applications-related information or support that may be provided by TI. Further, Buyers must fully indemnify TI and its representatives against any damages arising out of the use of TI products in such safety-critical applications.

TI products are neither designed nor intended for use in military/aerospace applications or environments unless the TI products are specifically designated by TI as military-grade or "enhanced plastic." Only products designated by TI as military-grade meet military specifications. Buyers acknowledge and agree that any such use of TI products which TI has not designated as military-grade is solely at the Buyer's risk, and that they are solely responsible for compliance with all legal and regulatory requirements in connection with such use.

TI products are neither designed nor intended for use in automotive applications or environments unless the specific TI products are designated by TI as compliant with ISO/TS 16949 requirements. Buyers acknowledge and agree that, if they use any non-designated products in automotive applications, TI will not be responsible for any failure to meet such requirements.

Following are URLs where you can obtain information on other Texas Instruments products and application solutions:

Products		**Applications**	
Amplifiers	amplifier.ti.com	Audio	www.ti.com/audio
Data Converters	dataconverter.ti.com	Automotive	www.ti.com/automotive
DLP® Products	www.dlp.com	Communications and Telecom	www.ti.com/communications
DSP	dsp.ti.com	Computers and Peripherals	www.ti.com/computers
Clocks and Timers	www.ti.com/clocks	Consumer Electronics	www.ti.com/consumer-apps
Interface	interface.ti.com	Energy	www.ti.com/energy
Logic	logic.ti.com	Industrial	www.ti.com/industrial
Power Mgmt	power.ti.com	Medical	www.ti.com/medical
Microcontrollers	microcontroller.ti.com	Security	www.ti.com/security
RFID	www.ti-rfid.com	Space, Avionics & Defense	www.ti.com/space-avionics-defense
RF/IF and ZigBee® Solutions	www.ti.com/lprf	Video and Imaging	www.ti.com/video
		Wireless	www.ti.com/wireless-apps

Mailing Address: Texas Instruments, Post Office Box 655303, Dallas, Texas 75265
Copyright © 2010, Texas Instruments Incorporated

Мы молодая и активно развивающаяся компания в области поставок электронных компонентов. Мы поставляем электронные компоненты отечественного и импортного производства напрямую от производителей и с крупнейших складов мира.

Благодаря сотрудничеству с мировыми поставщиками мы осуществляем комплексные и плановые поставки широчайшего спектра электронных компонентов.

Собственная эффективная логистика и склад в обеспечивает надежную поставку продукции в точно указанные сроки по всей России.

Мы осуществляем техническую поддержку нашим клиентам и предпродажную проверку качества продукции. На все поставляемые продукты мы предоставляем гарантию .

Осуществляем поставки продукции под контролем ВП МО РФ на предприятия военно-промышленного комплекса России , а также работаем в рамках 275 ФЗ с открытием отдельных счетов в уполномоченном банке. Система менеджмента качества компании соответствует требованиям ГОСТ ISO 9001.

Минимальные сроки поставки, гибкие цены, неограниченный ассортимент и индивидуальный подход к клиентам являются основой для выстраивания долгосрочного и эффективного сотрудничества с предприятиями радиоэлектронной промышленности, предприятиями ВПК и научно-исследовательскими институтами России.

С нами вы становитесь еще успешнее!

Наши контакты:

Телефон: +7 812 627 14 35

Электронная почта: sales@st-electron.ru

Адрес: 198099, Санкт-Петербург, Промышленная ул, дом № 19, литера Н, помещение 100-Н Офис 331