SOJ, TSOP, FP-BGA
Commercial Temp
Industrial Temp

256K x 16
4Mb Asynchronous SRAM

7, 8, 10, 12 ns
3.3 V V_{DD}
Center V_{DD} and V_{SS}

Features

- Fast access time: 7, 8, 10, 12 ns
- CMOS low power operation: 150/130/105/95 mA at minimum cycle time
- Single 3.3 V power supply
- All inputs and outputs are TTL-compatible
- Byte control
- Fully static operation
- Industrial Temperature Option: –40° to 85°C
- Package line up
  J: 400 mil, 44-pin SOJ package
  TP: 400 mil, 44-pin TSOP Type II package
  X: 6 mm x 10 mm Fine Pitch Ball Grid Array package

Description

The GS74116A is a high speed CMOS Static RAM organized as 262,144 words by 16 bits. Static design eliminates the need for external clocks or timing strobes. The GS operates on a single 3.3 V power supply and all inputs and outputs are TTL-compatible. The GS74116A is available in a 6 x 10 mm Fine Pitch BGA package, 400 mil SOJ and 400 mil TSOP Type-II packages.

SOJ 256K x 16-Pin Configuration (Package J)

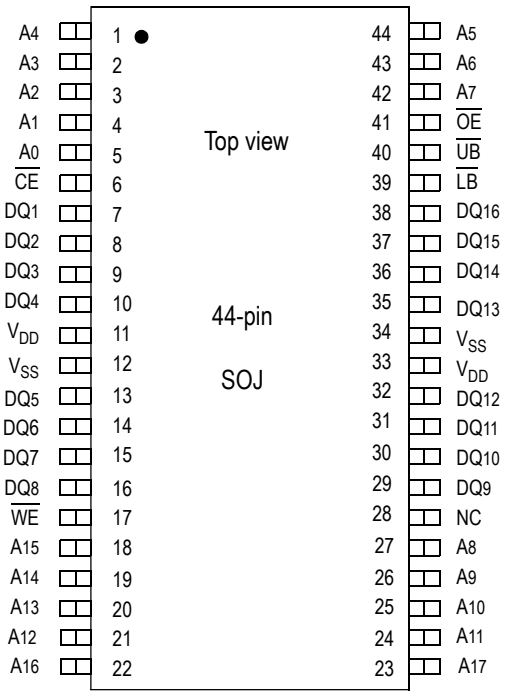

Pin Descriptions

Symbol	Description
A_0–A_{17}	Address input
DQ_1–DQ_{16}	Data input/output
$\overline{CE}$	Chip enable input
$\overline{LB}$	Lower byte enable input (DQ1 to DQ8)
$\overline{UB}$	Upper byte enable input (DQ9 to DQ16)
$\overline{WE}$	Write enable input
$\overline{OE}$	Output enable input
V_{DD}	+3.3 V power supply
V_{SS}	Ground
NC	No connect

FP-BGA 256K x 16 Bump Configuration (Package X)

	1	2	3	4	5	6
A	LB	OE	A0	A1	A2	NC
B	DQ16	UB	A3	A4	CE	DQ1
C	DQ14	DQ15	A5	A6	DQ2	DQ3
D	VSS	DQ13	A17	A7	DQ4	VDD
E	VDD	DQ12	NC	A16	DQ5	VSS
F	DQ11	DQ10	A8	A9	DQ7	DQ6
G	DQ9	NC	A10	A11	WE	DQ8
H	NC	A12	A13	A14	A15	NC

6 x 10 mm Bump Pitch

 © 2001, Giga Semiconductor, Inc.
Specifications cited are subject to change without notice. For latest documentation see http://www.gsitechnology.com.

Top View

TSOP-II 256K x 16 Pin Configuration (Package TP)

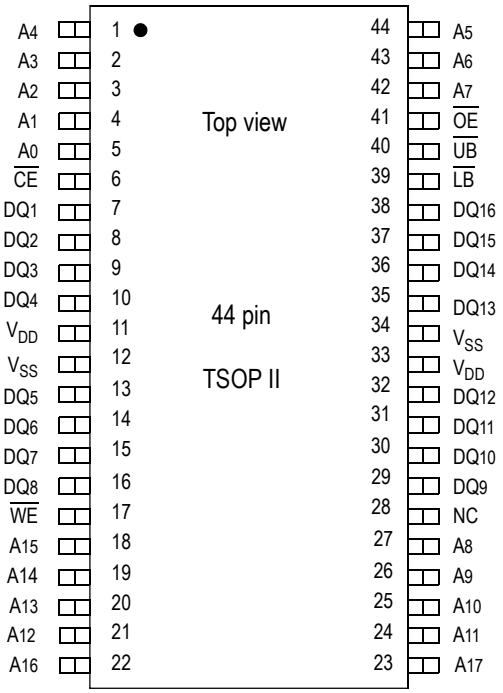

Block Diagram

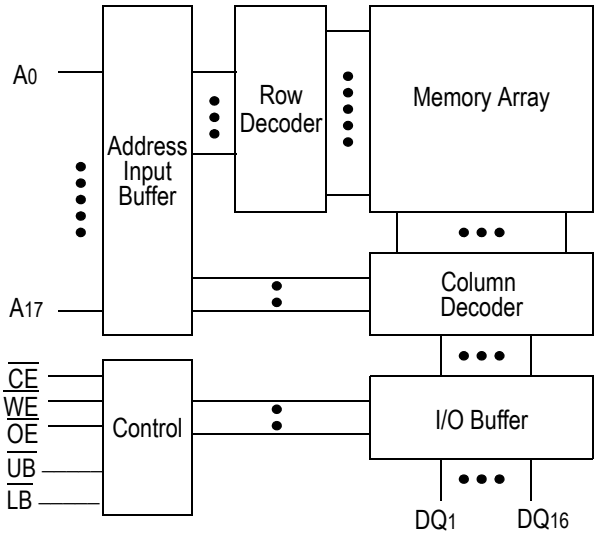

 © 2001, Giga Semiconductor, Inc.
Specifications cited are subject to change without notice. For latest documentation see http://www.gsitechnology.com.

Truth Table

$\overline{CE}$	$\overline{OE}$	$\overline{WE}$	$\overline{LB}$	$\overline{UB}$	DQ1 to DQ8	DQ9 to DQ16	VDD Current
H	X	X	X	X	Not Selected	Not Selected	ISB1, ISB2
L	L	H	L	L	Read	Read	IDD
			L	H	Read	High Z	
			H	L	High Z	Read	
L	X	L	L	L	Write	Write	
			L	H	Write	Not Write, High Z	
			H	L	Not Write, High Z	Write	
L	H	H	X	X	High Z	High Z	
L	X	X	H	H	High Z	High Z	

Note: X: “H” or “L”

Absolute Maximum Ratings

Parameter	Symbol	Rating	Unit
Supply Voltage	V_{DD}	–0.5 to +4.6	V
Input Voltage	V_{IN}	–0.5 to V_{DD} +0.5 (≤ 4.6 V max.)	V
Output Voltage	V_{OUT}	–0.5 to V_{DD} +0.5 (≤ 4.6 V max.)	V
Allowable power dissipation	PD	0.7	W
Storage temperature	T_{STG}	–55 to 150	°C

Note:
Permanent device damage may occur if Absolute Maximum Ratings are exceeded. Functional operation shall be restricted to Recommended Operating Conditions. Exposure to higher than recommended voltages for extended periods of time could affect device reliability.

 © 2001, Giga Semiconductor, Inc.
Specifications cited are subject to change without notice. For latest documentation see http://www.gsitechnology.com.

Recommended Operating Conditions

Parameter	Symbol	Min	Typ	Max	Unit
Supply Voltage for -7/-8/-10/-12	V_{DD}	3.0	3.3	3.6	V
Input High Voltage	V_{IH}	2.0	—	V_{DD} +0.3	V
Input Low Voltage	V_{IL}	–0.3	—	0.8	V
Ambient Temperature, Commercial Range	T_{Ac}	0	—	70	°C
Ambient Temperature, Industrial Range	T_{AI}	–40	—	85	°C

Note:
1. Input overshoot voltage should be less than V_{DD} +2 V and not exceed 20 ns.
2. Input undershoot voltage should be greater than –2 V and not exceed 20 ns.

Capacitance

Parameter	Symbol	Test Condition	Max	Unit
Input Capacitance	C_{IN}	V_{IN} = 0 V	5	pF
Output Capacitance	C_{OUT}	V_{OUT} = 0 V	7	pF

Notes:
1. Tested at T_A = 25°C, f = 1 MHz
2. These parameters are sampled and are not 100% tested.

DC I/O Pin Characteristics

Parameter	Symbol	Test Conditions	Min	Max
Input Leakage Current	I_{IL}	V_{IN} = 0 to V_{DD}	– 1 uA	1 uA
Output Leakage Current	I_{LO}	Output High Z V_{OUT} = 0 to V_{DD}	–1 uA	1 uA
Output High Voltage	V_{OH}	I_{OH} = –4 mA	2.4	—
Output Low Voltage	V_{OL}	I_{LO} = +4 mA	—	0.4 V

 © 2001, Giga Semiconductor, Inc.
Specifications cited are subject to change without notice. For latest documentation see http://www.gsitechnology.com.

Power Supply Currents

Parameter	Symbol	Test Conditions	0 to 70°C				–40 to 85°C				Unit
			7 ns	8 ns	10 ns	12 ns	7 ns	8 ns	10 ns	12 ns	
Operating Supply Current	I_{DD}	$\overline{CE} \le V_{IL}$ All other inputs $\ge V_{IH}$ or $\le V_{IL}$ Min. cycle time I_{OUT} = 0 mA	150	130	105	90	160	140	115	100	mA
Standby Current	I_{SB1}	$\overline{CE} \ge V_{IH}$ All other inputs $\ge V_{IH}$ or $\le V_{IL}$ Min. cycle time	40	30	25	25	50	40	35	35	mA
Standby Current	I_{SB2}	$\overline{CE} \ge V_{DD} - 0.2V$ All other inputs $\ge V_{DD} - 0.2$ V or ≤ 0.2 V	10				20				mA

AC Test Conditions

Parameter	Conditions
Input high level	V_{IH} = 2.4 V
Input low level	V_{IL} = 0.4 V
Input rise time	tr = 1 V/ns
Input fall time	tf = 1 V/ns
Input reference level	1.4 V
Output reference level	1.4 V
Output load	**Fig. 1& 2**

Note:
1. Include scope and jig capacitance.
2. Test conditions as specified with output loading as shown in **Fig. 1** unless otherwise noted.
3. Output load 2 for t_{LZ}, t_{HZ}, t_{OLZ} and t_{OHZ}

Output Load 1

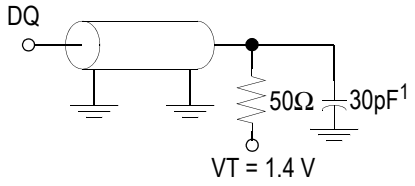

Output Load 2

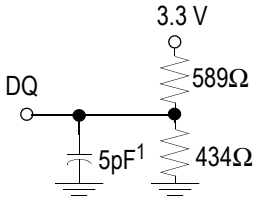

 © 2001, Giga Semiconductor, Inc.
Specifications cited are subject to change without notice. For latest documentation see http://www.gsitechnology.com.

AC Characteristics

Read Cycle

Parameter	Symbol	-7		-8		-10		-12		Unit
		Min	Max	Min	Max	Min	Max	Min	Max	
Read cycle time	t_{RC}	7	—	8	—	10	—	12	—	ns
Address access time	t_{AA}	—	7	—	8	—	10	—	12	ns
Chip enable access time ($\overline{CE}$)	t_{AC}	—	7	—	8	—	10	—	12	ns
Byte enable access time ($\overline{UB}$, $\overline{LB}$)	t_{AB}	—	3	—	3.5	—	4	—	5	ns
Output enable to output valid ($\overline{OE}$)	t_{OE}	—	3	—	3.5	—	4	—	5	ns
Output hold from address change	t_{OH}	3	—	3	—	3	—	3	—	ns
Chip enable to output in low Z ($\overline{CE}$)	t_{LZ}*	3	—	3	—	3	—	3	—	ns
Output enable to output in low Z ($\overline{OE}$)	t_{OLZ}*	0	—	0	—	0	—	0	—	ns
Byte enable to output in low Z ($\overline{UB}$, $\overline{LB}$)	t_{BLZ}*	0	—	0	—	0	—	0	—	ns
Chip disable to output in High Z ($\overline{CE}$)	t_{HZ}*	—	3.5	—	4	—	5	—	6	ns
Output disable to output in High Z ($\overline{OE}$)	t_{OHZ}*	—	3	—	3.5	—	4	—	5	ns
Byte disable to output in High Z ($\overline{UB}$, $\overline{LB}$)	t_{BHZ}*	—	3	—	3.5	—	4	—	5	ns

* These parameters are sampled and are not 100% tested.

Read Cycle 1: $\overline{CE} = \overline{OE} = V_{IL}$, $\overline{WE} = V_{IH}$, $\overline{UB}$ and, or $\overline{LB} = V_{IL}$

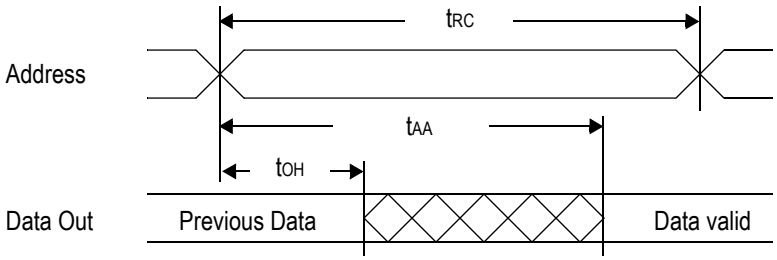

 © 2001, Giga Semiconductor, Inc.
Specifications cited are subject to change without notice. For latest documentation see http://www.gsitechnology.com.

Read Cycle 2: $\overline{WE} = V_{IH}$

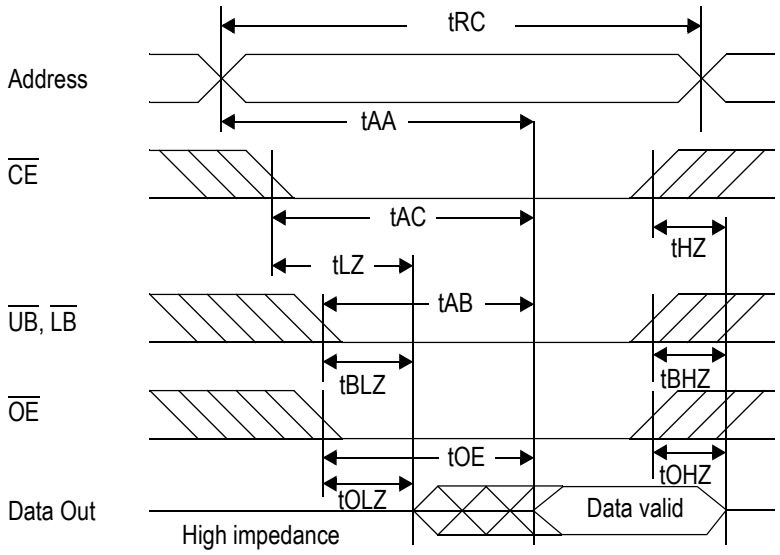

Write Cycle

Parameter	Symbol	-7		-8		-10		-12		Unit
		Min	Max	Min	Max	Min	Max	Min	Max	
Write cycle time	tWC	7	—	8	—	10	—	12	—	ns
Address valid to end of write	tAW	5	—	5.5	—	7	—	8	—	ns
Chip enable to end of write	tCW	5	—	5.5	—	7	—	8	—	ns
Byte enable to end of write	tBW	5	—	5.5	—	7	—	8	—	ns
Data set up time	tDW	3.5	—	4	—	4.5	—	6	—	ns
Data hold time	tDH	0	—	0	—	0	—	0	—	ns
Write pulse width	tWP	5	—	5.5	—	7	—	8	—	ns
Address set up time	tAS	0	—	0	—	0	—	0	—	ns
Write recovery time ($\overline{WE}$)	tWR	0	—	0	—	0	—	0	—	ns
Write recovery time ($\overline{CE}$)	tWR1	0	—	0	—	0	—	0	—	ns
Output Low Z from end of write	tWLZ*	3	—	3	—	3	—	3	—	ns
Write to output in High Z	tWHZ*	—	3	—	3.5	—	4	—	5	ns

* These parameters are sampled and are not 100% tested.

 © 2001, Giga Semiconductor, Inc.
Specifications cited are subject to change without notice. For latest documentation see http://www.gsitechnology.com.

Write Cycle 1: $\overline{WE}$ control

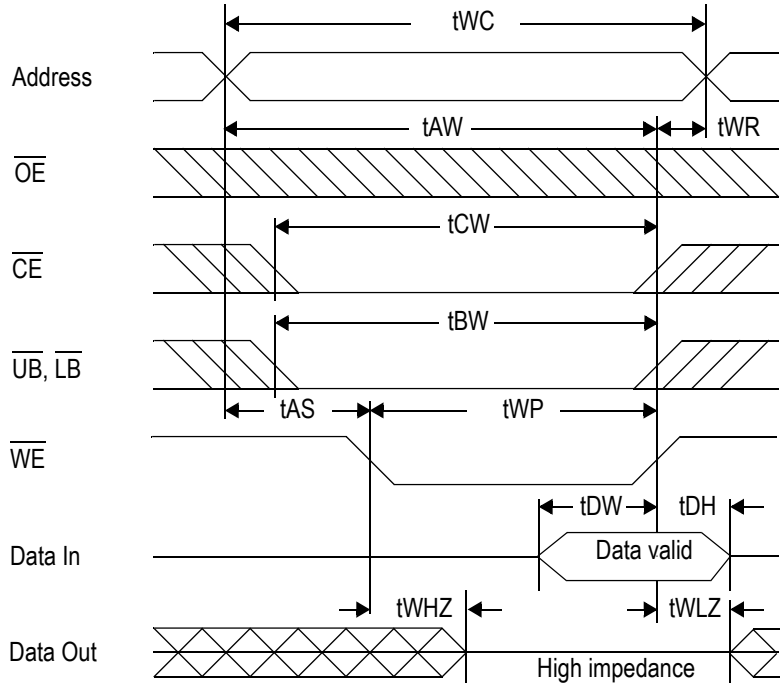

Write Cycle 2: $\overline{CE}$ control

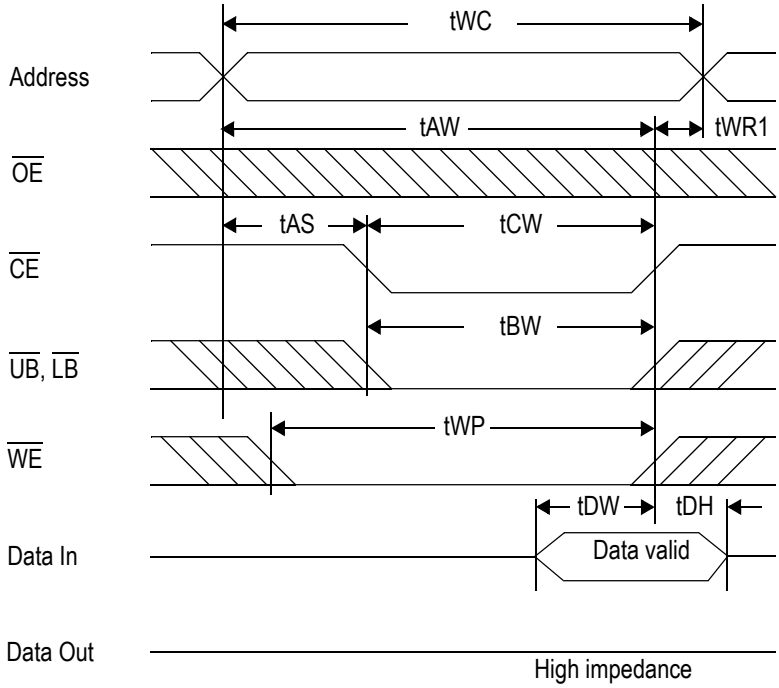

 © 2001, Giga Semiconductor, Inc.
Specifications cited are subject to change without notice. For latest documentation see http://www.gsitechnology.com.

Write Cycle 3: $\overline{UB}$, $\overline{LB}$ control

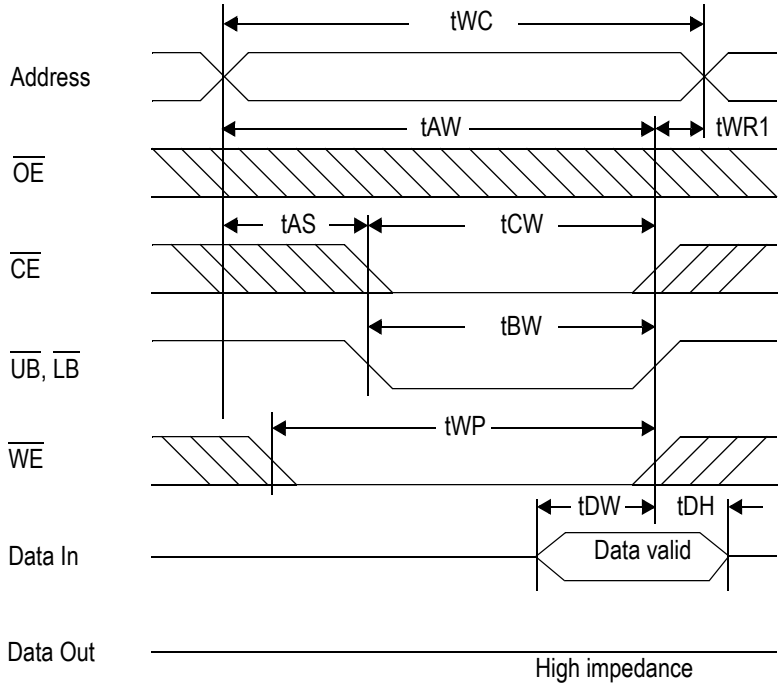

 © 2001, Giga Semiconductor, Inc.
Specifications cited are subject to change without notice. For latest documentation see http://www.gsitechnology.com.

44-Pin, 400 mil SOJ

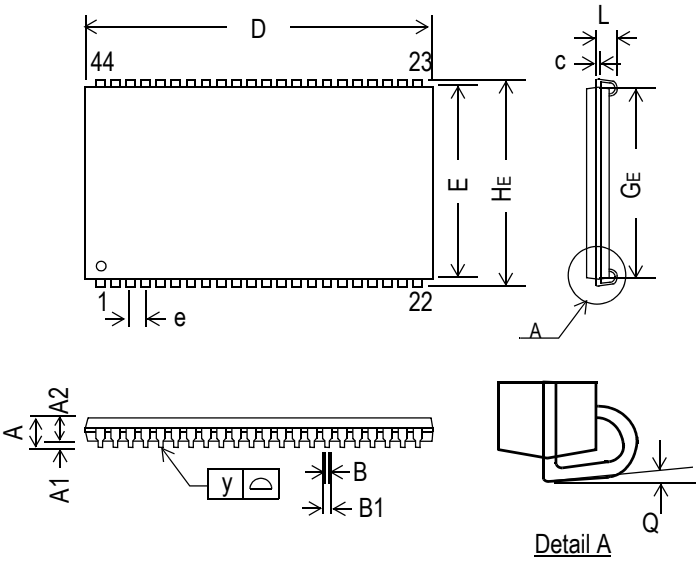

Symbol	Dimension in inch			Dimension in mm		
	min	nom	max	min	nom	max
A	—	—	0.148	—	—	3.759
A1	0.025	—	—	0.635	—	—
A2	0.105	0.110	0.115	2.667	2.794	2.921
B	—	0.018	—	—	0.457	—
B1	0.026	0.028	0.032	0.660	0.711	0.813
c	—	0.008	—	—	0.203	—
D	1.120	1.125	1.130	28.44	28.58	28.70
E	0.395	0.400	0.405	10.033	10.160	10.287
e	—	0.05	—	—	1.27	—
H_E	0.435	0.440	0.445	11.049	11.176	11.303
G_E	0.360	0.370	0.380	9.144	9.398	9.652
L	0.082	0.087	0.106	2.083	2.210	2.70
y	—	—	0.004	—	—	0.102
Q	0°	—	7°	0°	—	7°

Notes:
1. Dimension D& E do not include interlead flash
2. Dimension B1 does not include dambar protrusion / intrusion
3. Controlling dimension: inches

 © 2001, Giga Semiconductor, Inc.
Specifications cited are subject to change without notice. For latest documentation see http://www.gsitechnology.com.

44-Pin, 400 mil TSOP-II

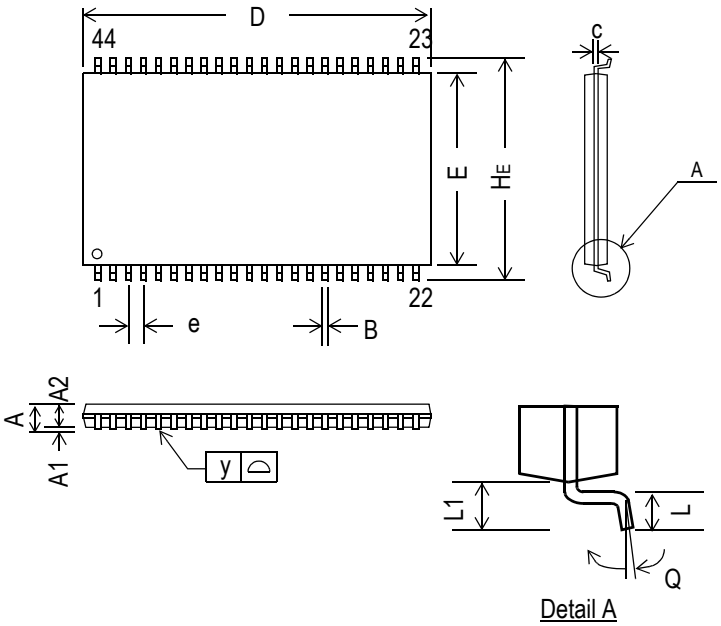

Symbol	Dimension in inch			Dimension in mm		
	min	nom	max	min	nom	max
A	—	—	0.047	—	—	1.20
A1	0.002	—	—	0.05	—	—
A2	0.037	0.039	0.041	0.95	1.00	1.05
B	0.01	0.014	0.018	0.25	0.35	0.45
c	—	0.006	—	—	0.15	—
D	0.721	0.725	0.729	18.31	18.41	18.51
E	0.396	0.400	0.404	10.06	10.16	10.26
e	—	0.031	—	—	0.80	—
HE	0.455	0.463	0.471	11.56	11.76	11.96
L	0.016	0.020	0.024	0.40	0.50	0.60
L1	—	0.031	—	—	0.80	—
y	—	—	0.004	—	—	0.10
Q	0°	—	5°	0°	—	5°

Notes:
1. Dimension D& E do not include interlead flash.
2. Dimension B does not include dambar protrusion/intrusion.
3. Controlling dimension: mm

 © 2001, Giga Semiconductor, Inc.
Specifications cited are subject to change without notice. For latest documentation see http://www.gsitechnology.com.

6 mm x 10 mm FP-BGA

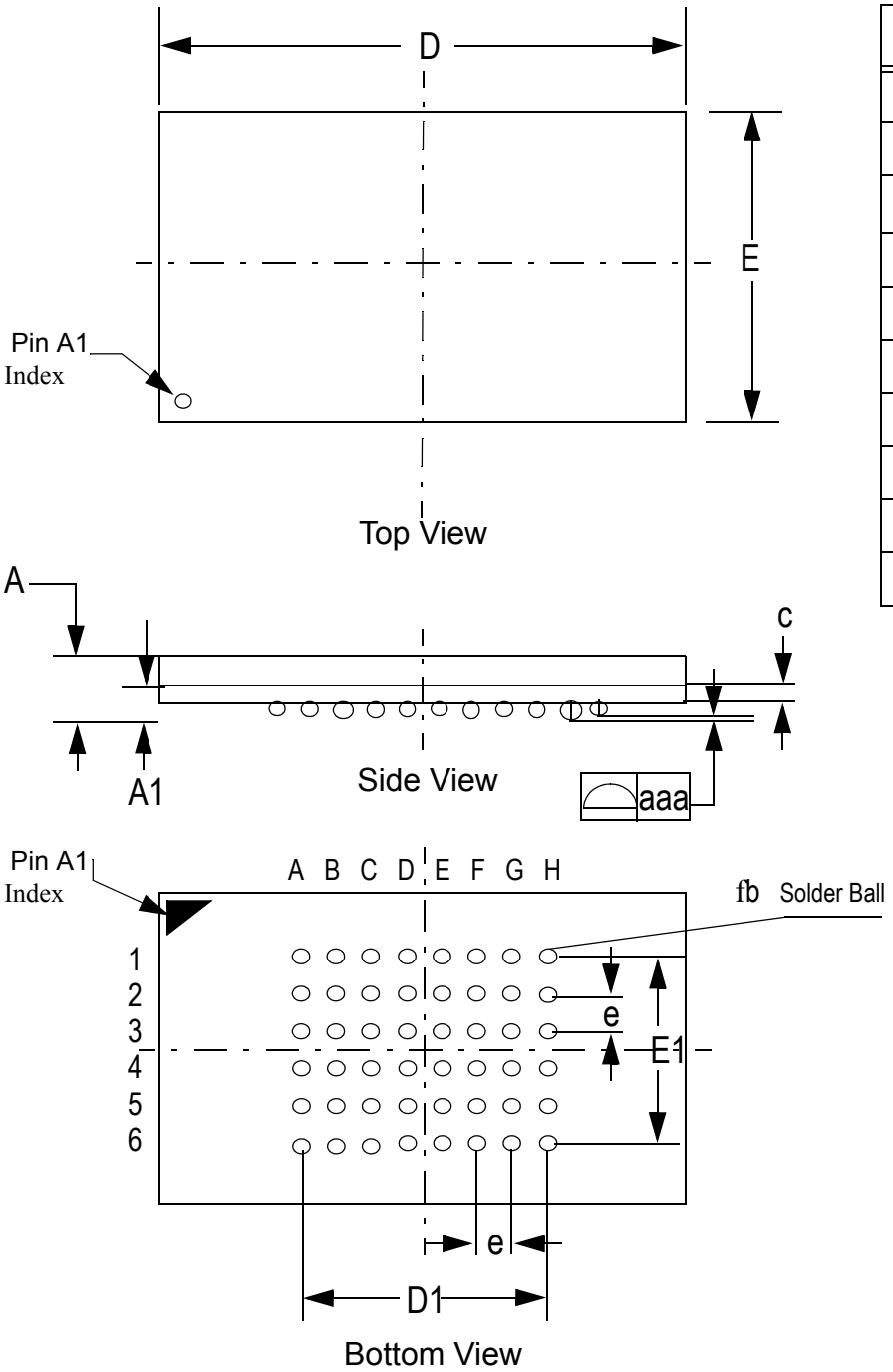

Symbol	Unit: mm
A	1.10±0.10
A1	0.20~0.30
fb	f0.30~0.40
c	0.36(TYP)
D	10.0±0.05
D1	5.25
E	6.0±0.05
E1	3.75
e	0.75(TYP)
aaa	0.10

 © 2001, Giga Semiconductor, Inc.
Specifications cited are subject to change without notice. For latest documentation see http://www.gsitechnology.com.

Ordering Information

Part Number*	Package	Access Time	Temp. Range	Status
GS74116ATP-7	400 mil TSOP-II	7 ns	Commercial	
GS74116ATP-8	400 mil TSOP-II	8 ns	Commercial	
GS74116ATP-10	400 mil TSOP-II	10 ns	Commercial	
GS74116ATP-12	400 mil TSOP-II	12 ns	Commercial	
GS74116ATP-7I	400 mil TSOP-II	7 ns	Industrial	
GS74116ATP-8I	400 mil TSOP-II	8 ns	Industrial	
GS74116ATP-10I	400 mil TSOP-II	10 ns	Industrial	
GS74116ATP-12I	400 mil TSOP-II	12 ns	Industrial	
GS74116AJ-7	400 mil SOJ	7 ns	Commercial	
GS74116AJ-8	400 mil SOJ	8 ns	Commercial	
GS74116AJ-10	400 mil SOJ	10 ns	Commercial	
GS74116AJ-12	400 mil SOJ	12 ns	Commercial	
GS74116AJ-7I	400 mil SOJ	7 ns	Industrial	
GS74116AJ-8I	400 mil SOJ	8 ns	Industrial	
GS74116AJ-10I	400 mil SOJ	10 ns	Industrial	
GS74116AJ-12I	400 mil SOJ	12 ns	Industrial	
GS74116AX-7	Fine Pitch BGA	7 ns	Commercial	
GS74116AX-8	Fine Pitch BGA	8 ns	Commercial	
GS74116AX-10	Fine Pitch BGA	10 ns	Commercial	
GS74116AX-12	Fine Pitch BGA	12 ns	Commercial	
GS74116AX-7I	Fine Pitch BGA	7 ns	Industrial	
GS74116AX-8I	Fine Pitch BGA	8 ns	Industrial	
GS74116AX-10I	Fine Pitch BGA	10 ns	Industrial	
GS74116AX-12I	Fine Pitch BGA	12 ns	Industrial	

* Customers requiring delivery in Tape and Reel should add the character “T” to the end of the part number. For example: GS74116ATP-8T

 © 2001, Giga Semiconductor, Inc.
Specifications cited are subject to change without notice. For latest documentation see http://www.gsitechnology.com.

4Mb Asynchronous Datasheet Revision History

Rev. Code: Old; New	Types of Changes Format or Content	Page #/Revisions/Reason
74116A_r1	Format/Content	• Created new datasheet
74116A_r1; 74116A_r1_01	Content	• Added 6 ns and 7 ns speed bins • Updated power numbers • Changed FPBGA package size from 7.2 x 11.65 mm to 6 x 10 mm • Changed package designator from “U” to “X” for FPBGA • Changed D3 on FPBGA pinout to A17 and E3 to NC
74116A_r1_01; 74116A_r1_02	Content	• Updated Recommended Operating Conditions on page 4 • Updated Read Cycle and Write Cycle AC Characteristics tables
74116A_r1_02; 74116A_r1_03	Content	• Removed 6 ns speed bin from entire document

 © 2001, Giga Semiconductor, Inc.
Specifications cited are subject to change without notice. For latest documentation see http://www.gsitechnology.com.

Мы молодая и активно развивающаяся компания в области поставок электронных компонентов. Мы поставляем электронные компоненты отечественного и импортного производства напрямую от производителей и с крупнейших складов мира.

Благодаря сотрудничеству с мировыми поставщиками мы осуществляем комплексные и плановые поставки широчайшего спектра электронных компонентов.

Собственная эффективная логистика и склад в обеспечивает надежную поставку продукции в точно указанные сроки по всей России.

Мы осуществляем техническую поддержку нашим клиентам и предпродажную проверку качества продукции. На все поставляемые продукты мы предоставляем гарантию .

Осуществляем поставки продукции под контролем ВП МО РФ на предприятия военно-промышленного комплекса России , а также работаем в рамках 275 ФЗ с открытием отдельных счетов в уполномоченном банке. Система менеджмента качества компании соответствует требованиям ГОСТ ISO 9001.

Минимальные сроки поставки, гибкие цены, неограниченный ассортимент и индивидуальный подход к клиентам являются основой для выстраивания долгосрочного и эффективного сотрудничества с предприятиями радиоэлектронной промышленности, предприятиями ВПК и научно-исследовательскими институтами России.

С нами вы становитесь еще успешнее!

Наши контакты:

Телефон: +7 812 627 14 35

Электронная почта: sales@st-electron.ru

Адрес: 198099, Санкт-Петербург, Промышленная ул, дом № 19, литера Н, помещение 100-Н Офис 331