165-Bump BGA
Commercial Temp
Industrial Temp

144Mb SigmaDDR™-II Burst of 2 SRAM

375 MHz–250 MHz
1.8 V V_{DD}
1.8 V and 1.5 V I/O

Features

- Simultaneous Read and Write SigmaDDR™ Interface
- Common I/O bus
- JEDEC-standard pinout and package
- Double Data Rate interface
- Byte Write (x36 and x18) and Nybble Write (x8) function
- Burst of 2 Read and Write
- 1.8 V +100/–100 mV core power supply
- 1.5 V or 1.8 V HSTL Interface
- Pipelined read operation with self-timed Late Write
- Fully coherent read and write pipelines
- ZQ pin for programmable output drive strength
- IEEE 1149.1 JTAG-compliant Boundary Scan
- Pin-compatible with present 9Mb, 18Mb, 36Mb and 72Mb devices
- 165-bump, 15 mm x 17 mm, 1 mm bump pitch BGA package
- RoHS-compliant 165-bump BGA package available

SigmaDDR™ Family Overview

The GS81302T08/09/18/36E are built in compliance with the SigmaDDR-II SRAM pinout standard for Common I/O synchronous SRAMs. They are 150,994,944-bit (144Mb) SRAMs. The GS81302T08/09/18/36E SigmaDDR-II SRAMs are just one element in a family of low power, low voltage HSTL I/O SRAMs designed to operate at the speeds needed to implement economical high performance networking systems.

Clocking and Addressing Schemes

The GS81302T08/09/18/36E SigmaDDR-II SRAMs are synchronous devices. They employ two input register clock inputs, K and $\overline{K}$. K and $\overline{K}$ are independent single-ended clock inputs, not differential inputs to a single differential clock input buffer. The device also allows the user to manipulate the output register clock inputs quasi independently with the C and $\overline{C}$ clock inputs. C and $\overline{C}$ are also independent single-ended clock inputs, not differential inputs. If the C clocks are tied high, the K clocks are routed internally to fire the output registers instead.

Each internal read and write operation in a SigmaDDR-II B2 RAM is two times wider than the device I/O bus. An input data bus de-multiplexer is used to accumulate incoming data before it is simultaneously written to the memory array. An output data multiplexer is used to capture the data produced from a single memory array read and then route it to the appropriate output drivers as needed.

When a new address is loaded into a x18 or x36 version of the part, A0 is used to initialize the pointers that control the data multiplexer / de-multiplexer so the RAM can perform "critical word first" operations. From an external address point of view, regardless of the starting point, the data transfers always follow the same sequence {0, 1} or {1, 0} (where the digits shown represent A0).

Unlike the x18 and x36 versions, the input and output data multiplexers of the x8 and x9 versions are not preset by address inputs and therefore do not allow "critical word first" operations. The address fields of the x8 and x9 SigmaDDR-II B2 RAMs are one address pin less than the advertised index depth (e.g., the 16M x 8 has an 8M addressable index, and A0 is not an accessible address pin).

Not Recommended for New Design

Parameter Synopsis

	-375	-350	-333	-300	-250
tKHKH	2.66 ns	2.86 ns	3.0 ns	3.3 ns	4.0 ns
tKHQV	0.45 ns	0.45 ns	0.45 ns	0.45 ns	0.45 ns

 © 2011, GSI Technology

Specifications cited are subject to change without notice. For latest documentation see http://www.gsitechnology.com.

4M x 36 SigmaDDR-II SRAM—Top View

	1	2	3	4	5	6	7	8	9	10	11
A	$\overline{CQ}$	SA	SA	R/$\overline{W}$	$\overline{BW2}$	$\overline{K}$	$\overline{BW1}$	$\overline{LD}$	SA	SA	CQ
B	NC	DQ27	DQ18	SA	$\overline{BW3}$	K	$\overline{BW0}$	SA	NC/SA (288Mb)	NC	DQ8
C	NC	NC	DQ28	V_{SS}	SA	SA0	SA	V_{SS}	NC	DQ17	DQ7
D	NC	DQ29	DQ19	V_{SS}	V_{SS}	V_{SS}	V_{SS}	V_{SS}	NC	NC	DQ16
E	NC	NC	DQ20	V_{DDQ}	V_{SS}	V_{SS}	V_{SS}	V_{DDQ}	NC	DQ15	DQ6
F	NC	DQ30	DQ21	V_{DDQ}	V_{DD}	V_{SS}	V_{DD}	V_{DDQ}	NC	NC	DQ5
G	NC	DQ31	DQ22	V_{DDQ}	V_{DD}	V_{SS}	V_{DD}	V_{DDQ}	NC	NC	DQ14
H	$\overline{Doff}$	V_{REF}	V_{DDQ}	V_{DDQ}	V_{DD}	V_{SS}	V_{DD}	V_{DDQ}	V_{DDQ}	V_{REF}	ZQ
J	NC	NC	DQ32	V_{DDQ}	V_{DD}	V_{SS}	V_{DD}	V_{DDQ}	NC	DQ13	DQ4
K	NC	NC	DQ23	V_{DDQ}	V_{DD}	V_{SS}	V_{DD}	V_{DDQ}	NC	DQ12	DQ3
L	NC	DQ33	DQ24	V_{DDQ}	V_{SS}	V_{SS}	V_{SS}	V_{DDQ}	NC	NC	DQ2
M	NC	NC	DQ34	V_{SS}	V_{SS}	V_{SS}	V_{SS}	V_{SS}	NC	DQ11	DQ1
N	NC	DQ35	DQ25	V_{SS}	SA	SA	SA	V_{SS}	NC	NC	DQ10
P	NC	NC	DQ26	SA	SA	C	SA	SA	NC	DQ9	DQ0
R	TDO	TCK	SA	SA	SA	$\overline{C}$	SA	SA	SA	TMS	TDI

11 x 15 Bump BGA—13 x 15 mm^2 Body—1 mm Bump Pitch

Notes:

1. $\overline{BW0}$ controls writes to DQ0:DQ8; $\overline{BW1}$ controls writes to DQ9:DQ17; $\overline{BW2}$ controls writes to DQ18:DQ26; $\overline{BW3}$ controls writes to DQ27:DQ35.
2. B9 is the expansion address.

Not Recommended for New Design

 © 2011, GSI Technology

Specifications cited are subject to change without notice. For latest documentation see http://www.gsitechnology.com.

8M x 18 SigmaDDR-II SRAM—Top View

	1	2	3	4	5	6	7	8	9	10	11
A	$\overline{CQ}$	SA	SA	R/$\overline{W}$	$\overline{BW1}$	$\overline{K}$	SA	$\overline{LD}$	SA	SA	CQ
B	NC	DQ9	NC	SA	NC/SA (288Mb)	K	$\overline{BW0}$	SA	NC	NC	DQ8
C	NC	NC	NC	V_{SS}	SA	SA0	SA	V_{SS}	NC	DQ7	NC
D	NC	NC	DQ10	V_{SS}	V_{SS}	V_{SS}	V_{SS}	V_{SS}	NC	NC	NC
E	NC	NC	DQ11	V_{DDQ}	V_{SS}	V_{SS}	V_{SS}	V_{DDQ}	NC	NC	DQ6
F	NC	DQ12	NC	V_{DDQ}	V_{DD}	V_{SS}	V_{DD}	V_{DDQ}	NC	NC	DQ5
G	NC	NC	DQ13	V_{DDQ}	V_{DD}	V_{SS}	V_{DD}	V_{DDQ}	NC	NC	NC
H	$\overline{Doff}$	V_{REF}	V_{DDQ}	V_{DDQ}	V_{DD}	V_{SS}	V_{DD}	V_{DDQ}	V_{DDQ}	V_{REF}	ZQ
J	NC	NC	NC	V_{DDQ}	V_{DD}	V_{SS}	V_{DD}	V_{DDQ}	NC	DQ4	NC
K	NC	NC	DQ14	V_{DDQ}	V_{DD}	V_{SS}	V_{DD}	V_{DDQ}	NC	NC	DQ3
L	NC	DQ15	NC	V_{DDQ}	V_{SS}	V_{SS}	V_{SS}	V_{DDQ}	NC	NC	DQ2
M	NC	NC	NC	V_{SS}	V_{SS}	V_{SS}	V_{SS}	V_{SS}	NC	DQ1	NC
N	NC	NC	DQ16	V_{SS}	SA	SA	SA	V_{SS}	NC	NC	NC
P	NC	NC	DQ17	SA	SA	C	SA	SA	NC	NC	DQ0
R	TDO	TCK	SA	SA	SA	$\overline{C}$	SA	SA	SA	TMS	TDI

11 x 15 Bump BGA—13 x 15 mm^2 Body—1 mm Bump Pitch

Notes:
1. $\overline{BW0}$ controls writes to DQ0:DQ8; $\overline{BW1}$ controls writes to DQ9:DQ17.
2. B5 is the expansion address.

Not Recommended for New Design

 © 2011, GSI Technology

Specifications cited are subject to change without notice. For latest documentation see http://www.gsitechnology.com.

16M x 9 SigmaDDR-II SRAM—Top View

	1	2	3	4	5	6	7	8	9	10	11
A	$\overline{CQ}$	SA	SA	R/$\overline{W}$	NC	$\overline{K}$	SA	$\overline{LD}$	SA	SA	CQ
B	NC	NC	NC	SA	NC/SA (288Mb)	K	$\overline{BW0}$	SA	NC	NC	DQ4
C	NC	NC	NC	V_{SS}	SA	SA	SA	V_{SS}	NC	NC	NC
D	NC	NC	NC	V_{SS}	V_{SS}	V_{SS}	V_{SS}	V_{SS}	NC	NC	NC
E	NC	NC	DQ5	V_{DDQ}	V_{SS}	V_{SS}	V_{SS}	V_{DDQ}	NC	NC	DQ3
F	NC	NC	NC	V_{DDQ}	V_{DD}	V_{SS}	V_{DD}	V_{DDQ}	NC	NC	NC
G	NC	NC	DQ6	V_{DDQ}	V_{DD}	V_{SS}	V_{DD}	V_{DDQ}	NC	NC	NC
H	$\overline{Doff}$	V_{REF}	V_{DDQ}	V_{DDQ}	V_{DD}	V_{SS}	V_{DD}	V_{DDQ}	V_{DDQ}	V_{REF}	ZQ
J	NC	NC	NC	V_{DDQ}	V_{DD}	V_{SS}	V_{DD}	V_{DDQ}	NC	DQ2	NC
K	NC	NC	NC	V_{DDQ}	V_{DD}	V_{SS}	V_{DD}	V_{DDQ}	NC	NC	NC
L	NC	DQ7	NC	V_{DDQ}	V_{SS}	V_{SS}	V_{SS}	V_{DDQ}	NC	NC	DQ1
M	NC	NC	NC	V_{SS}	V_{SS}	V_{SS}	V_{SS}	V_{SS}	NC	NC	NC
N	NC	NC	NC	V_{SS}	SA	SA	SA	V_{SS}	NC	NC	NC
P	NC	NC	DQ8	SA	SA	C	SA	SA	NC	NC	DQ0
R	TDO	TCK	SA	SA	SA	$\overline{C}$	SA	SA	SA	TMS	TDI

11 x 15 Bump BGA—13 x 15 mm^2 Body—1 mm Bump Pitch

Notes:

1. Unlike the x36 and x18 versions of this device, the x8 and x9 versions do not give the user access to A0. SA0 is set to 0 at the beginning of each access.
2. $\overline{BW0}$ controls writes to DQ0:DQ8.
3. B5 is the expansion address.

Not Recommended for New Design

 © 2011, GSI Technology

Specifications cited are subject to change without notice. For latest documentation see http://www.gsitechnology.com.

16M x 8 SigmaDDR-II SRAM—Top View

	1	2	3	4	5	6	7	8	9	10	11
A	$\overline{CQ}$	SA	SA	R/$\overline{W}$	$\overline{NW1}$	$\overline{K}$	SA	$\overline{LD}$	SA	SA	CQ
B	NC	NC	NC	SA	NC/SA (288Mb)	K	$\overline{NW0}$	SA	NC	NC	DQ3
C	NC	NC	NC	V_{SS}	SA	SA	SA	V_{SS}	NC	NC	NC
D	NC	NC	NC	V_{SS}	V_{SS}	V_{SS}	V_{SS}	V_{SS}	NC	NC	NC
E	NC	NC	DQ4	V_{DDQ}	V_{SS}	V_{SS}	V_{SS}	V_{DDQ}	NC	NC	DQ2
F	NC	NC	NC	V_{DDQ}	V_{DD}	V_{SS}	V_{DD}	V_{DDQ}	NC	NC	NC
G	NC	NC	DQ5	V_{DDQ}	V_{DD}	V_{SS}	V_{DD}	V_{DDQ}	NC	NC	NC
H	$\overline{Doff}$	V_{REF}	V_{DDQ}	V_{DDQ}	V_{DD}	V_{SS}	V_{DD}	V_{DDQ}	V_{DDQ}	V_{REF}	ZQ
J	NC	NC	NC	V_{DDQ}	V_{DD}	V_{SS}	V_{DD}	V_{DDQ}	NC	DQ1	NC
K	NC	NC	NC	V_{DDQ}	V_{DD}	V_{SS}	V_{DD}	V_{DDQ}	NC	NC	NC
L	NC	DQ6	NC	V_{DDQ}	V_{SS}	V_{SS}	V_{SS}	V_{DDQ}	NC	NC	DQ0
M	NC	NC	NC	V_{SS}	V_{SS}	V_{SS}	V_{SS}	V_{SS}	NC	NC	NC
N	NC	NC	NC	V_{SS}	SA	SA	SA	V_{SS}	NC	NC	NC
P	NC	NC	DQ7	SA	SA	C	SA	SA	NC	NC	NC
R	TDO	TCK	SA	SA	SA	$\overline{C}$	SA	SA	SA	TMS	TDI

11 x 15 Bump BGA—13 x 15 mm^2 Body—1 mm Bump Pitch

Notes:

1. Unlike the x36 and x18 versions of this device, the x8 and x9 versions do not give the user access to A0. SA0 is set to 0 at the beginning of each access.
2. $\overline{NW0}$ controls writes to DQ0:DQ3; $\overline{NW1}$ controls writes to DQ4:DQ7.
3. B5 is the expansion address.

Not Recommended for New Design

 © 2011, GSI Technology

Specifications cited are subject to change without notice. For latest documentation see http://www.gsitechnology.com.

Pin Description Table

Symbol	Description	Type	Comments
SA	Synchronous Address Inputs	Input	—
R/$\overline{W}$	Synchronous Read/Write	Input	Read: Active High Write: Active Low
$\overline{BW0}$–$\overline{BW3}$	Synchronous Byte Writes	Input	Active Low x18/x36 only
$\overline{NW0}$–$\overline{NW1}$	Nybble Write Control Pin	Input	Active Low x8 only
$\overline{LD}$	Synchronous Load Pin	Input	Active Low
K	Input Clock	Input	Active High
$\overline{K}$	Input Clock	Input	Active Low
C	Output Clock	Input	Active High
$\overline{C}$	Output Clock	Input	Active Low
TMS	Test Mode Select	Input	—
TDI	Test Data Input	Input	—
TCK	Test Clock Input	Input	—
TDO	Test Data Output	Output	—
V_{REF}	HSTL Input Reference Voltage	Input	—
ZQ	Output Impedance Matching Input	Input	—
MCL	Must Connect Low	—	—
DQ	Data I/O	Input/Output	Three State
$\overline{Doff}$	Disable DLL when low	Input	Active Low
CQ	Output Echo Clock	Output	—
$\overline{CQ}$	Output Echo Clock	Output	—
V_{DD}	Power Supply	Supply	1.8 V Nominal
V_{DDQ}	Isolated Output Buffer Supply	Supply	1.8 V or 1.5 V Nominal
V_{SS}	Power Supply: Ground	Supply	—
NC	No Connect	—	—

Notes:
1. NC = Not Connected to die or any other pin
2. C, $\overline{C}$, K, $\overline{K}$ cannot be set to V_{REF} voltage.
3. When ZQ pin is directly connected to V_{DDQ}, output impedance is set to minimum and it cannot be connected to ground or left unconnected.

Not Recommended for New Design

 © 2011, GSI Technology

Specifications cited are subject to change without notice. For latest documentation see http://www.gsitechnology.com.

Background

Common I/O SRAMs, from a system architecture point of view, are attractive in read dominated or block transfer applications. Therefore, the SigmaDDR-II SRAM interface and truth table are optimized for burst reads and writes. Common I/O SRAMs are unpopular in applications where alternating reads and writes are needed because bus turnaround delays can cut high speed Common I/O SRAM data bandwidth in half.

Burst Operations

Read and write operations are "burst" operations. In every case where a read or write command is accepted by the SRAM, it will respond by issuing or accepting two beats of data, executing a data transfer on subsequent rising edges of K and $\overline{K}$, as illustrated in the timing diagrams. This means that it is possible to load new addresses every K clock cycle. Addresses can be loaded less often, if intervening deselect cycles are inserted.

Deselect Cycles

Chip Deselect commands are pipelined to the same degree as read commands. This means that if a deselect command is applied to the SRAM on the next cycle after a read command captured by the SRAM, the device will complete the two beat read data transfer and then execute the deselect command, returning the output drivers to high-Z. A high on the $\overline{LD}$ pin prevents the RAM from loading read or write command inputs and puts the RAM into deselect mode as soon as it completes all outstanding burst transfer operations.

SigmaDDR-II Burst of 2 SRAM Read Cycles

The SRAM executes pipelined reads. The status of the Address, $\overline{LD}$ and R/$\overline{W}$ pins are evaluated on the rising edge of K. The read command ($\overline{LD}$ low and R/$\overline{W}$ high) is clocked into the SRAM by a rising edge of K. After the next rising edge of K, the SRAM produces data out in response to the next rising edge of $\overline{C}$ (or the next rising edge of $\overline{K}$, if C and $\overline{C}$ are tied high). The second beat of data is transferred on the next rising edge of C, for a total of two transfers per address load.

SigmaDDR-II Burst of 2 SRAM Write Cycles

The status of the Address, $\overline{LD}$ and R/$\overline{W}$ pins are evaluated on the rising edge of K. The SRAM executes "late write" data transfers. Data in is due at the device inputs on the rising edge of K following the rising edge of K clock used to clock in the write command ($\overline{LD}$ and R/$\overline{W}$ low) and the write address. To complete the remaining beat of the burst of two write transfer, the SRAM captures data in on the next rising edge of $\overline{K}$, for a total of two transfers per address load.

Not Recommended for New Design

 © 2011, GSI Technology

Specifications cited are subject to change without notice. For latest documentation see http://www.gsitechnology.com.

Not Recommended for New Design

Special Functions

Byte Write and Nybble Write Control

Byte Write Enable pins are sampled at the same time that Data In is sampled. A high on the Byte Write Enable pin associated with a particular byte (e.g., $\overline{BW0}$ controls D0–D8 inputs) will inhibit the storage of that particular byte, leaving whatever data may be stored at the current address at that byte location undisturbed. Any or all of the Byte Write Enable pins may be driven high or low during the data in sample times in a write sequence.

Each write enable command and write address loaded into the RAM provides the base address for a 2 beat data transfer. The x18 version of the RAM, for example, may write 36 bits in association with each address loaded. Any 9-bit byte may be masked in any write sequence.

Nybble Write (4-bit) write control is implemented on the 8-bit-wide version of the device. For the x8 version of the device, "Nybble Write Enable" and "$\overline{NBx}$" may be substituted in all the discussion above.

Example x18 RAM Write Sequence using Byte Write Enables

Data In Sample Time	$\overline{BW0}$	$\overline{BW1}$	D0–D8	D9–D17
Beat 1	0	1	Data In	Don't Care
Beat 2	1	0	Don't Care	Data In

Resulting Write Operation

Byte 1 D0–D8	Byte 2 D9–D17	Byte 3 D0–D8	Byte 4 D9–D17
Written	Unchanged	Unchanged	Written
Beat 1		Beat 2	

Output Register Control

SigmaDDR-II SRAMs offer two mechanisms for controlling the output data registers. Typically, control is handled by the Output Register Clock inputs, C and $\overline{C}$. The Output Register Clock inputs can be used to make small phase adjustments in the firing of the output registers by allowing the user to delay driving data out as much as a few nanoseconds beyond the next rising edges of the K and $\overline{K}$ clocks. If the C and $\overline{C}$ clock inputs isare tied high, the RAM reverts to K and $\overline{K}$ control of the outputs, allowing the RAM to function as a conventional pipelined read SRAM.

FLXDrive-II Output Driver Impedance Control

HSTL I/O SigmaDDR-II SRAMs are supplied with programmable impedance output drivers. The ZQ pin must be connected to V_{SS} via an external resistor, RQ, to allow the SRAM to monitor and adjust its output driver impedance. The value of RQ must be 5X the value of the desired RAM output impedance at mid-rail. The allowable range of RQ to guarantee impedance matching continuously is between 175Ω and 350Ω. Periodic readjustment of the output driver impedance is necessary as the impedance is affected by drifts in supply voltage and temperature. The SRAM's output impedance circuitry compensates for drifts in supply voltage and temperature. A clock cycle counter periodically triggers an impedance evaluation, resets and counts again. Each impedance evaluation may move the output driver impedance level one step at a time towards the optimum level. The output driver is implemented with discrete binary weighted impedance steps.

 © 2011, GSI Technology

Specifications cited are subject to change without notice. For latest documentation see http://www.gsitechnology.com.

Example Four Bank Depth Expansion Schematic

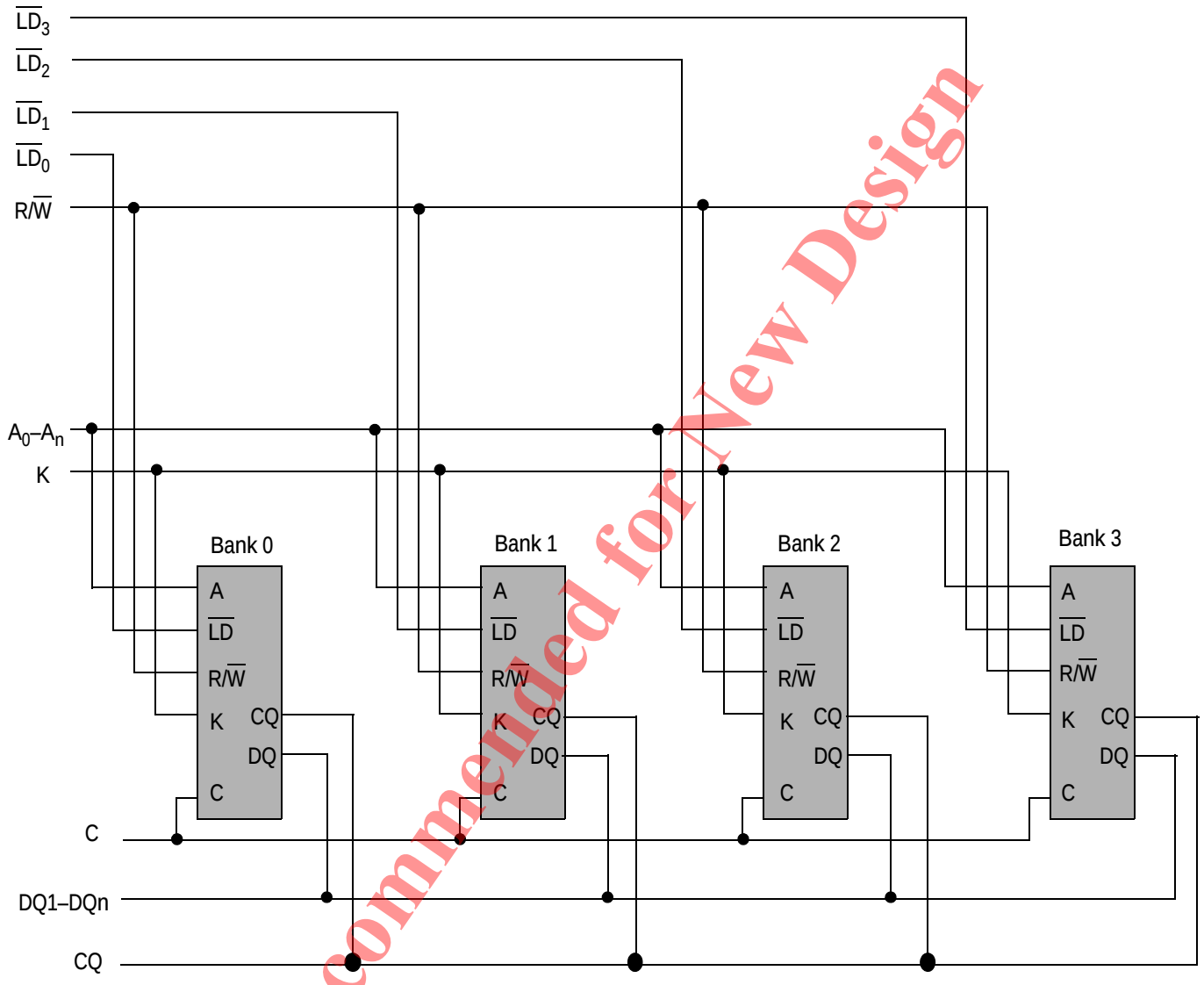

Note:
For simplicity $\overline{BWn}$ (or $\overline{NWn}$), $\overline{K}$, and $\overline{C}$ are not shown.

Not Recommended for New Design

 © 2011, GSI Technology

Specifications cited are subject to change without notice. For latest documentation see http://www.gsitechnology.com.

Common I/O SigmaDDR-II Burst of 2 SRAM Truth Table

K_n	$\overline{LD}$	$R/\overline{W}$	DQ		Operation
			A + 0	A + 1	
↑	1	X	Hi-Z	Hi-Z	Deselect
↑	0	0	$D@K_{n+1}$	$D@\overline{K}_{n+1}$	Write
↑	0	1	$Q@\overline{K}_{n+1}$ or $\overline{C}_{n+1}$	$Q@K_{n+2}$ or C_{n+2}	Read

Note:
Q is controlled by K clocks if C clocks are not used.

Not Recommended for New Design

 © 2011, GSI Technology

Specifications cited are subject to change without notice. For latest documentation see http://www.gsitechnology.com.

Burst of 2 Byte Write Clock Truth Table

$\overline{BW}$	$\overline{BW}$	Current Operation	D	D
K↑ (t_{n+1})	$\overline{K}$↑ ($t_{n+1½}$)	K↑ (t_n)	K↑ (t_{n+1})	$\overline{K}$↑ ($t_{n+1½}$)
T	T	Write Dx stored if $\overline{BWn}$ = 0 in both data transfers	D1	D2
T	F	Write Dx stored if $\overline{BWn}$ = 0 in 1st data transfer only	D1	X
F	T	Write Dx stored if $\overline{BWn}$ = 0 in 2nd data transfer only	X	D2
F	F	Write Abort No Dx stored in either data transfer	X	X

Notes:
1. "1" = input "high"; "0" = input "low"; "X" = input "don't care"; "T" = input "true"; "F" = input "false".
2. If one or more $\overline{BWn}$ = 0, then $\overline{BW}$ = "T", else $\overline{BW}$ = "F".

Burst of 2 Nybble Write Clock Truth Table

$\overline{NW}$	$\overline{NW}$	Current Operation	D	D
K↑ (t_{n+1})	$\overline{K}$↑ ($t_{n+1½}$)	K↑ (t_n)	K↑ (t_{n+1})	$\overline{K}$↑ ($t_{n+1½}$)
T	T	Write Dx stored if $\overline{NWn}$ = 0 in both data transfers	D1	D2
T	F	Write Dx stored if $\overline{NWn}$ = 0 in 1st data transfer only	D1	X
F	T	Write Dx stored if $\overline{NWn}$ = 0 in 2nd data transfer only	X	D2
F	F	Write Abort No Dx stored in either data transfer	X	X

Notes:
1. "1" = input "high"; "0" = input "low"; "X" = input "don't care"; "T" = input "true"; "F" = input "false".
2. If one or more $\overline{NWn}$ = 0, then $\overline{NW}$ = "T", else $\overline{NW}$ = "F".

Not Recommended for New Design

 © 2011, GSI Technology

Specifications cited are subject to change without notice. For latest documentation see http://www.gsitechnology.com.

Not Recommended for New Design

x36 Byte Write Enable ($\overline{BWn}$) Truth Table

$\overline{BW0}$	$\overline{BW1}$	$\overline{BW2}$	$\overline{BW3}$	D0–D8	D9–D17	D18–D26	D27–D35
1	1	1	1	Don't Care	Don't Care	Don't Care	Don't Care
0	1	1	1	Data In	Don't Care	Don't Care	Don't Care
1	0	1	1	Don't Care	Data In	Don't Care	Don't Care
0	0	1	1	Data In	Data In	Don't Care	Don't Care
1	1	0	1	Don't Care	Don't Care	Data In	Don't Care
0	1	0	1	Data In	Don't Care	Data In	Don't Care
1	0	0	1	Don't Care	Data In	Data In	Don't Care
0	0	0	1	Data In	Data In	Data In	Don't Care
1	1	1	0	Don't Care	Don't Care	Don't Care	Data In
0	1	1	0	Data In	Don't Care	Don't Care	Data In
1	0	1	0	Don't Care	Data In	Don't Care	Data In
0	0	1	0	Data In	Data In	Don't Care	Data In
1	1	0	0	Don't Care	Don't Care	Data In	Data In
0	1	0	0	Data In	Don't Care	Data In	Data In
1	0	0	0	Don't Care	Data In	Data In	Data In
0	0	0	0	Data In	Data In	Data In	Data In

x18 Byte Write Enable ($\overline{BWn}$) Truth Table

$\overline{BW0}$	$\overline{BW1}$	D0–D8	D9–D17
1	1	Don't Care	Don't Care
0	1	Data In	Don't Care
1	0	Don't Care	Data In
0	0	Data In	Data In

x8 Nybble Write Enable ($\overline{NWn}$) Truth Table

$\overline{NW0}$	$\overline{NW1}$	D0–D3	D4–D7
1	1	Don't Care	Don't Care
0	1	Data In	Don't Care
1	0	Don't Care	Data In
0	0	Data In	Data In

 © 2011, GSI Technology

Specifications cited are subject to change without notice. For latest documentation see http://www.gsitechnology.com.

Not Recommended for New Design

Absolute Maximum Ratings

(All voltages reference to V_{SS})

Symbol	Description	Value	Unit
V_{DD}	Voltage on V_{DD} Pins	–0.5 to 2.9	V
V_{DDQ}	Voltage in V_{DDQ} Pins	–0.5 to V_{DD}	V
V_{REF}	Voltage in V_{REF} Pins	–0.5 to V_{DDQ}	V
$V_{I/O}$	Voltage on I/O Pins	–0.5 to V_{DDQ} +0.5 (≤ 2.9 V max.)	V
V_{IN}	Voltage on Other Input Pins	–0.5 to V_{DDQ} +0.5 (≤ 2.9 V max.)	V
I_{IN}	Input Current on Any Pin	+/–100	mA dc
I_{OUT}	Output Current on Any I/O Pin	+/–100	mA dc
T_J	Maximum Junction Temperature	125	°C
T_{STG}	Storage Temperature	–55 to 125	°C

Note:

Permanent damage to the device may occur if the Absolute Maximum Ratings are exceeded. Operation should be restricted to Recommended Operating Conditions. Exposure to conditions exceeding the Recommended Operating Conditions, for an extended period of time, may affect reliability of this component.

Recommended Operating Conditions

Power Supplies

Parameter	Symbol	Min.	Typ.	Max.	Unit
Supply Voltage	V_{DD}	1.7	1.8	1.9	V
I/O Supply Voltage	V_{DDQ}	1.4	—	V_{DD}	V
Reference Voltage	V_{REF}	0.68	—	0.95	V

Note:

The power supplies need to be powered up simultaneously or in the following sequence: V_{DD}, V_{DDQ}, V_{REF}, followed by signal inputs. The power down sequence must be the reverse. V_{DDQ} must not exceed V_{DD}. For more information, read AN1021 SigmaQuad and SigmaDDR Power-Up.

Operating Temperature

Parameter	Symbol	Min.	Typ.	Max.	Unit
Junction Temperature (Commercial Range Versions)	T_J	0	25	85	°C
Junction Temperature (Industrial Range Versions)*	T_J	–40	25	100	°C

Note:

* The part numbers of Industrial Temperature Range versions end with the character "I". Unless otherwise noted, all performance specifications quoted are evaluated for worst case in the temperature range marked on the device.

 © 2011, GSI Technology

Specifications cited are subject to change without notice. For latest documentation see http://www.gsitechnology.com.

Thermal Impedance

Package	Test PCB Substrate	θ JA (C°/W) Airflow = 0 m/s	θ JA (C°/W) Airflow = 1 m/s	θ JA (C°/W) Airflow = 2 m/s	θ JB (C°/W)	θ JC (C°/W)
165 BGA	4-layer	16.4	13.4	12.4	8.6	1.2

Notes:
1. Thermal Impedance data is based on a number of of samples from mulitple lots and should be viewed as a typical number.
2. Please refer to JEDEC standard JESD51-6.
3. The characteristics of the test fixture PCB influence reported thermal characteristics of the device. Be advised that a good thermal path to the PCB can result in cooling or heating of the RAM depending on PCB temperature.

HSTL I/O DC Input Characteristics

Parameter	Symbol	Min	Max	Units	Notes
DC Input Logic High	V_{IH} (dc)	V_{REF} + 0.10	V_{DDQ} + 0.3 V	V	1
DC Input Logic Low	V_{IL} (dc)	–0.3 V	V_{REF} – 0.10	V	1

Notes:
1. Compatible with both 1.8 V and 1.5 V I/O drivers
2. These are DC test criteria. DC design criteria is V_{REF} ± 50 mV. The AC V_{IH}/V_{IL} levels are defined separately for measuring timing parameters.
3. V_{IL} (Min) DC = –0.3 V, V_{IL}(Min) AC = –1.5 V (pulse width ≤ 3 ns).
4. V_{IH} (Max) DC = V_{DDQ} + 0.3 V, V_{IH}(Max) AC = V_{DDQ} + 0.85 V (pulse width ≤ 3 ns).

HSTL I/O AC Input Characteristics

Parameter	Symbol	Min	Max	Units	Notes
AC Input Logic High	V_{IH} (ac)	V_{REF} + 0.20	—	V	2,3
AC Input Logic Low	V_{IL} (ac)	—	V_{REF} – 0.20	V	2,3
V_{REF} Peak-to-Peak AC Voltage	V_{REF} (ac)	—	5% V_{REF} (DC)	V	1

Notes:
1. The peak-to-peak AC component superimposed on V_{REF} may not exceed 5% of the DC component of V_{REF}.
2. To guarantee AC characteristics, V_{IH},V_{IL}, Trise, and Tfall of inputs and clocks must be within 10% of each other.
3. For devices supplied with HSTL I/O input buffers. Compatible with both 1.8 V and 1.5 V I/O drivers.

Not Recommended for New Design

 © 2011, GSI Technology

Specifications cited are subject to change without notice. For latest documentation see http://www.gsitechnology.com.

Undershoot Measurement and Timing

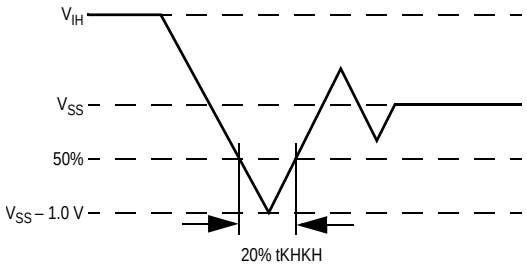

Overshoot Measurement and Timing

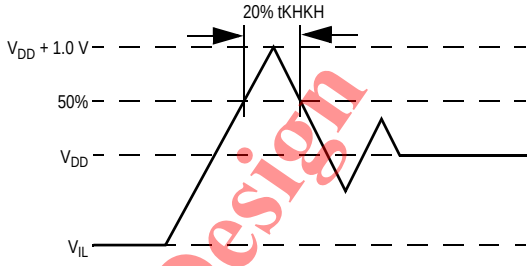

Capacitance

(T_A = 25°C, f = 1 MHz, V_{DD} = 1.8 V)

Parameter	Symbol	Test conditions	Typ.	Max.	Unit
Input Capacitance	C_{IN}	V_{IN} = 0 V	4	5	pF
Output Capacitance	C_{OUT}	V_{OUT} = 0 V	6	7	pF
Clock Capacitance	C_{CLK}	—	5	6	pF

Note:
This parameter is sample tested.

AC Test Conditions

Parameter	Conditions
Input high level	V_{DDQ}
Input low level	0 V
Max. input slew rate	2 V/ns
Input reference level	V_{DDQ}/2
Output reference level	V_{DDQ}/2

Note:
Test conditions as specified with output loading as shown unless otherwise noted.

AC Test Load Diagram

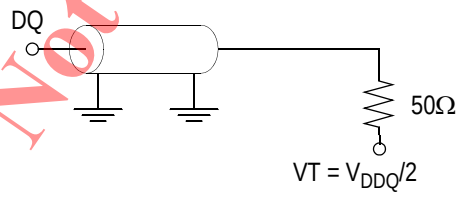

RQ = 250 Ω (HSTL I/O)
V_{REF} = 0.75 V

Not Recommended for New Design

 © 2011, GSI Technology

Specifications cited are subject to change without notice. For latest documentation see http://www.gsitechnology.com.

Input and Output Leakage Characteristics

Parameter	Symbol	Test Conditions	Min.	Max
Input Leakage Current (except mode pins)	I_{IL}	V_{IN} = 0 to V_{DD}	–2 uA	2 uA
$\overline{\text{Doff}}$	$I_{IL\overline{DOFF}}$	V_{IN} = 0 to V_{DD}	–2 uA	100 uA
Output Leakage Current	I_{OL}	Output Disable, V_{OUT} = 0 to V_{DDQ}	–2 uA	2 uA

Programmable Impedance HSTL Output Driver DC Electrical Characteristics

Parameter	Symbol	Min.	Max.	Units	Notes
Output High Voltage	V_{OH1}	$V_{DDQ}/2$	V_{DDQ}	V	1, 3
Output Low Voltage	V_{OL1}	Vss	$V_{DDQ}/2$	V	2, 3
Output High Voltage	V_{OH2}	V_{DDQ} – 0.2	V_{DDQ}	V	4, 5
Output Low Voltage	V_{OL2}	Vss	0.2	V	4, 6

Notes:

1. $I_{OH} = (V_{DDQ}/2) / (RQ/5)$ +/– 15% @ $V_{OH} = V_{DDQ}/2$ (for: $175\Omega \leq RQ \leq 350\Omega$).
2. $I_{OL} = (V_{DDQ}/2) / (RQ/5)$ +/– 15% @ $V_{OL} = V_{DDQ}/2$ (for: $175\Omega \leq RQ \leq 350\Omega$).
3. Parameter tested with RQ = 250Ω and V_{DDQ} = 1.5 V or 1.8 V
4. $0\Omega \leq RQ \leq \infty\Omega$
5. I_{OH} = –1.0 mA
6. I_{OL} = 1.0 mA

Not Recommended for New Design

 © 2011, GSI Technology

Specifications cited are subject to change without notice. For latest documentation see http://www.gsitechnology.com.

Operating Currents

Parameter	Symbol	Test Conditions	-375		-350		-333		-300		-250		Notes
			0 to 70°C	–40 to 85°C	0 to 70°C	–40 to 85°C	0 to 70°C	–40 to 85°C	0 to 70°C	–40 to 85°C	0 to 70°C	–40 to 85°C	
Operating Current (x36): DDR	I_{DD}	V_{DD} = Max, I_{OUT} = 0 mA Cycle Time ≥ t_{KHKH} Min	940 mA	950 mA	895 mA	905 mA	850 mA	860 mA	780 mA	790 mA	670 mA	680 mA	2, 3
Operating Current (x18): DDR	I_{DD}	V_{DD} = Max, I_{OUT} = 0 mA Cycle Time ≥ t_{KHKH} Min	845 mA	855 mA	800 mA	810 mA	755 mA	765 mA	690 mA	700 mA	595 mA	605 mA	2, 3
Operating Current (x9): DDR	I_{DD}	V_{DD} = Max, I_{OUT} = 0 mA Cycle Time ≥ t_{KHKH} Min	845 mA	855 mA	800 mA	810 mA	755 mA	765 mA	690 mA	700 mA	595 mA	605 mA	2, 3
Operating Current (x8): DDR	I_{DD}	V_{DD} = Max, I_{OUT} = 0 mA Cycle Time ≥ t_{KHKH} Min	845 mA	855 mA	800 mA	810 mA	755 mA	765 mA	690 mA	700 mA	595 mA	605 mA	2, 3
Standby Current (NOP): DDR	I_{SB1}	Device deselected, I^{OUT} = 0 mA, f = Max, All Inputs ≤ 0.2 V or ≥ V_{DD} – 0.2 V	280 mA	290 mA	275 mA	285 mA	270 mA	280 mA	260 mA	270 mA	245 mA	255 mA	2, 4

Notes:

1. Power measured with output pins floating.
2. Minimum cycle, I_{OUT} = 0 mA
3. Operating current is calculated with 50% read cycles and 50% write cycles.
4. Standby Current is only after all pending read and write burst operations are completed.

Not Recommended for New Design

 © 2011, GSI Technology

Specifications cited are subject to change without notice. For latest documentation see http://www.gsitechnology.com.

AC Electrical Characteristics

Parameter	Symbol	-375		-350		-333		-300		-250		Units	Notes
		Min	Max	Min	Max	Min	Max	Min	Max	Min	Max		
Clock													
K, $\overline{K}$ Clock Cycle Time C, $\overline{C}$ Clock Cycle Time	t_{KHKH} t_{CHCH}	2.66	8.4	2.86	8.4	3.0	4.5	3.3	4.5	4.0	8.4	ns	
tKC Variable	t_{KCVar}	—	0.2	—	0.2	—	0.2	—	0.2	—	0.2	ns	6
K, $\overline{K}$ Clock High Pulse Width C, $\overline{C}$ Clock High Pulse Width	t_{KHKL} t_{CHCL}	1.06	—	1.14	—	1.2	—	1.32	—	1.6	—	ns	
K, $\overline{K}$ Clock Low Pulse Width C, $\overline{C}$ Clock Low Pulse Width	t_{KLKH} t_{CLCH}	1.06	—	1.14	—	1.2	—	1.32	—	1.6	—	ns	
K to $\overline{K}$ High C to $\overline{C}$ High	$t_{KH\overline{K}H}$ $t_{CH\overline{C}H}$	1.13	—	1.23	—	1.35	—	1.49	—	1.8	—	ns	
$\overline{K}$ to K High $\overline{C}$ to C High	$t_{\overline{K}HKH}$ $t_{\overline{C}HCH}$	1.13	—	1.23	—	1.35	—	1.49	—	1.8	—	ns	
K, $\overline{K}$ Clock High to C, $\overline{C}$ Clock High	t_{KHCH}	0	1.21	0	1.29	0	1.35	0	1.49	0	1.8	ns	
DLL Lock Time	t_{KCLock}	1024	—	1024	—	1024	—	1024	—	1024	—	cycle	7
K Static to DLL reset	$t_{KCReset}$	30	—	30	—	30	—	30	—	30	—	ns	
Output Times													
K, $\overline{K}$ Clock High to Data Output Valid C, $\overline{C}$ Clock High to Data Output Valid	t_{KHQV} t_{CHQV}	—	0.45	—	0.45	—	0.45	—	0.45	—	0.45	ns	4
K, $\overline{K}$ Clock High to Data Output Hold C, $\overline{C}$ Clock High to Data Output Hold	t_{KHQX} t_{CHQX}	–0.45	—	–0.45	—	–0.45	—	–0.45	—	–0.45	—	ns	4
K, $\overline{K}$ Clock High to Echo Clock Valid C, $\overline{C}$ Clock High to Echo Clock Valid	t_{KHCQV} t_{CHCQV}	—	0.45	—	0.45	—	0.45	—	0.45	—	0.45	ns	
K, $\overline{K}$ Clock High to Echo Clock Hold C, $\overline{C}$ Clock High to Echo Clock Hold	t_{KHCQX} t_{CHCQX}	–0.45	—	–0.45	—	–0.45	—	–0.45	—	–0.45	—	ns	
CQ, $\overline{CQ}$ High Output Valid	t_{CQHQV}		0.2	—	0.23	—	0.25	—	0.27	—	0.30	ns	8
CQ, $\overline{CQ}$ High Output Hold	t_{CQHQX}	–0.2	—	–0.23	—	–0.25	—	–0.27	—	–0.30	—	ns	8
CQ Phase Distortion	$t_{CQH\overline{CQ}H}$ $t_{\overline{CQ}HCQH}$	0.9	—	1.0	—	1.10	—	1.24	—	1.55	—	ns	
K Clock High to Data Output High-Z C Clock High to Data Output High-Z	t_{KHQZ} t_{CHQZ}	—	0.45	—	0.45	—	0.45	—	0.45	—	0.45	ns	4
K Clock High to Data Output Low-Z C Clock High to Data Output Low-Z	t_{KHQX1} t_{CHQX1}	–0.45	—	–0.45	—	–0.45	—	–0.45	—	–0.45	—	ns	4
Setup Times													
Address Input Setup Time	t_{AVKH}	0.4	—	0.4	—	0.4	—	0.4	—	0.5	—	ns	1
Control Input Setup Time(R/ $\overline{W}$) ($\overline{LD}$)	t_{IVKH}	0.4	—	0.4	—	0.4	—	0.4	—	0.5	—	ns	2
Control Input Setup Time (BWX) (NWX)	t_{IVKH}	0.28	—	0.28	—	0.28	—	0.3	—	0.35	—	ns	3
Data Input Setup Time	t_{DVKH}	0.28	—	0.28	—	0.28	—	0.3	—	0.35	—	ns	

Not Recommended for New Design

 © 2011, GSI Technology

Specifications cited are subject to change without notice. For latest documentation see http://www.gsitechnology.com.

AC Electrical Characteristics (Continued)

Parameter	Symbol	-375		-350		-333		-300		-250		Units	Notes
		Min	Max	Min	Max	Min	Max	Min	Max	Min	Max		
Hold Times													
Address Input Hold Time	t_{KHAX}	0.4	—	0.4	—	0.4	—	0.4	—	0.5	—	ns	1
Control Input Hold Time (R/ $\overline{W}$) ($\overline{LD}$)	t_{KHIX}	0.4	—	0.4	—	0.4	—	0.4	—	0.5	—	ns	2
Control Input Hold Time (BWX) ($\overline{NWX}$)	t_{KHIX}	0.28	—	0.28	—	0.28	—	0.3	—	0.35	—	ns	3
Data Input Hold Time	t_{KHDX}	0.28	—	0.28	—	0.28	—	0.3	—	0.35	—	ns	

Notes:

1. All Address inputs must meet the specified setup and hold times for all latching clock edges.
2. Control signals are R/ $\overline{W}$, $\overline{LD}$.
3. Control signals are $\overline{BW0}$, $\overline{BW1}$, and ($\overline{NW0}$, $\overline{NW1}$ for x8) and ($\overline{BW2}$, $\overline{BW3}$ for x36).
4. If C, $\overline{C}$ are tied high, K, $\overline{K}$ become the references for C, $\overline{C}$ timing parameters
5. To avoid bus contention, at a given voltage and temperature tCHQX1 is bigger than tCHQZ. The specs as shown do not imply bus contention because tCHQX1 is a MIN parameter that is worst case at totally different test conditions (0°C, 1.9 V) than tCHQZ, which is a MAX parameter (worst case at 70°C, 1.7 V). It is not possible for two SRAMs on the same board to be at such different voltages and temperatures.
6. Clock phase jitter is the variance from clock rising edge to the next expected clock rising edge.
7. V_{DD} slew rate must be less than 0.1 V DC per 50 ns for DLL lock retention. DLL lock time begins once V_{DD} and input clock are stable.
8. Echo clock is very tightly controlled to data valid/data hold. By design, there is a ±0.1 ns variation from echo clock to data. The datasheet parameters reflect tester guard bands and test setup variations.

Not Recommended for New Design

 © 2011, GSI Technology

Specifications cited are subject to change without notice. For latest documentation see http://www.gsitechnology.com.

C and $\overline{C}$ Controlled Read First Timing Diagram

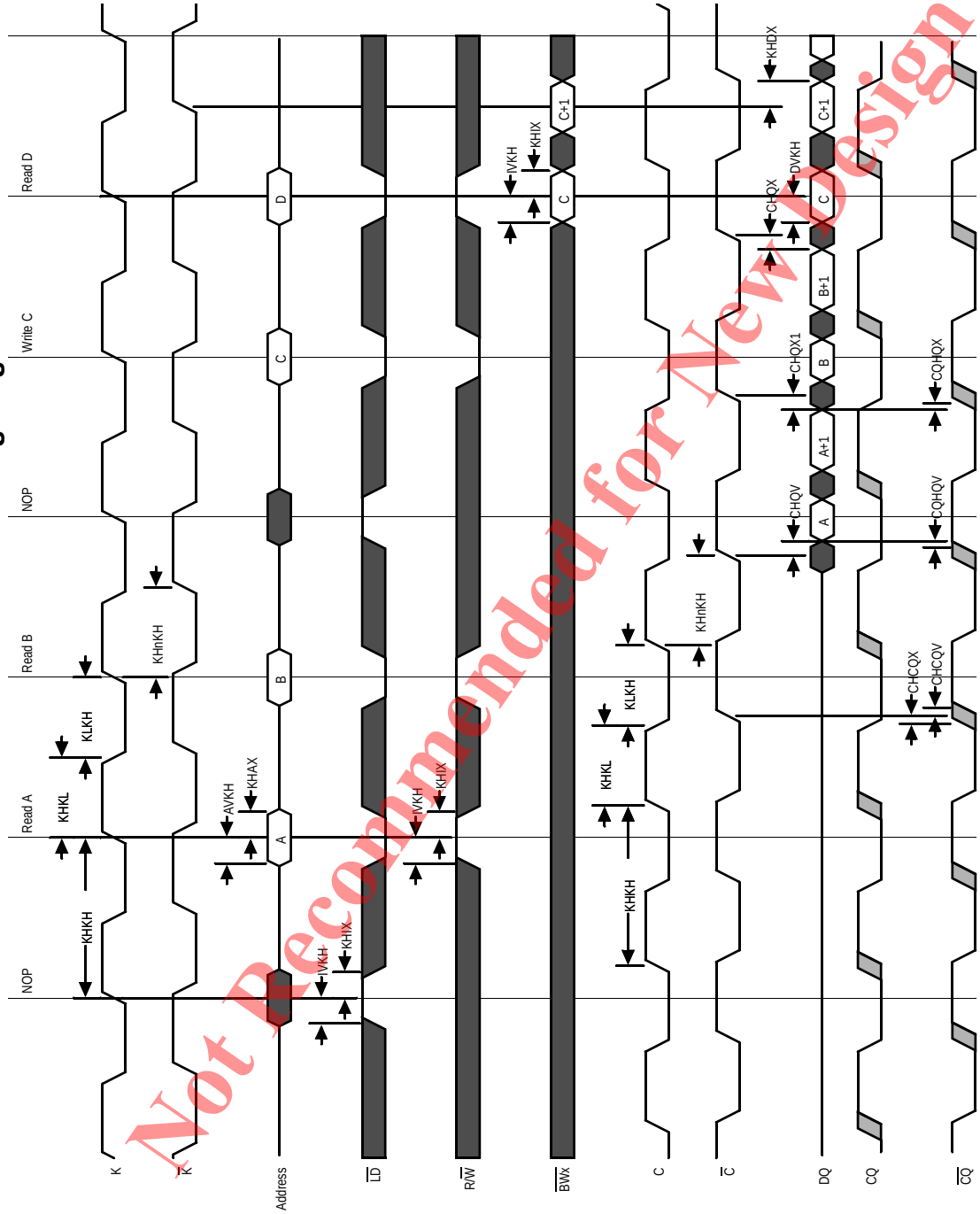

Not Recommended for New Design

 © 2011, GSI Technology

Specifications cited are subject to change without notice. For latest documentation see http://www.gsitechnology.com.

K and $\overline{K}$ Controlled Read First Timing Diagram

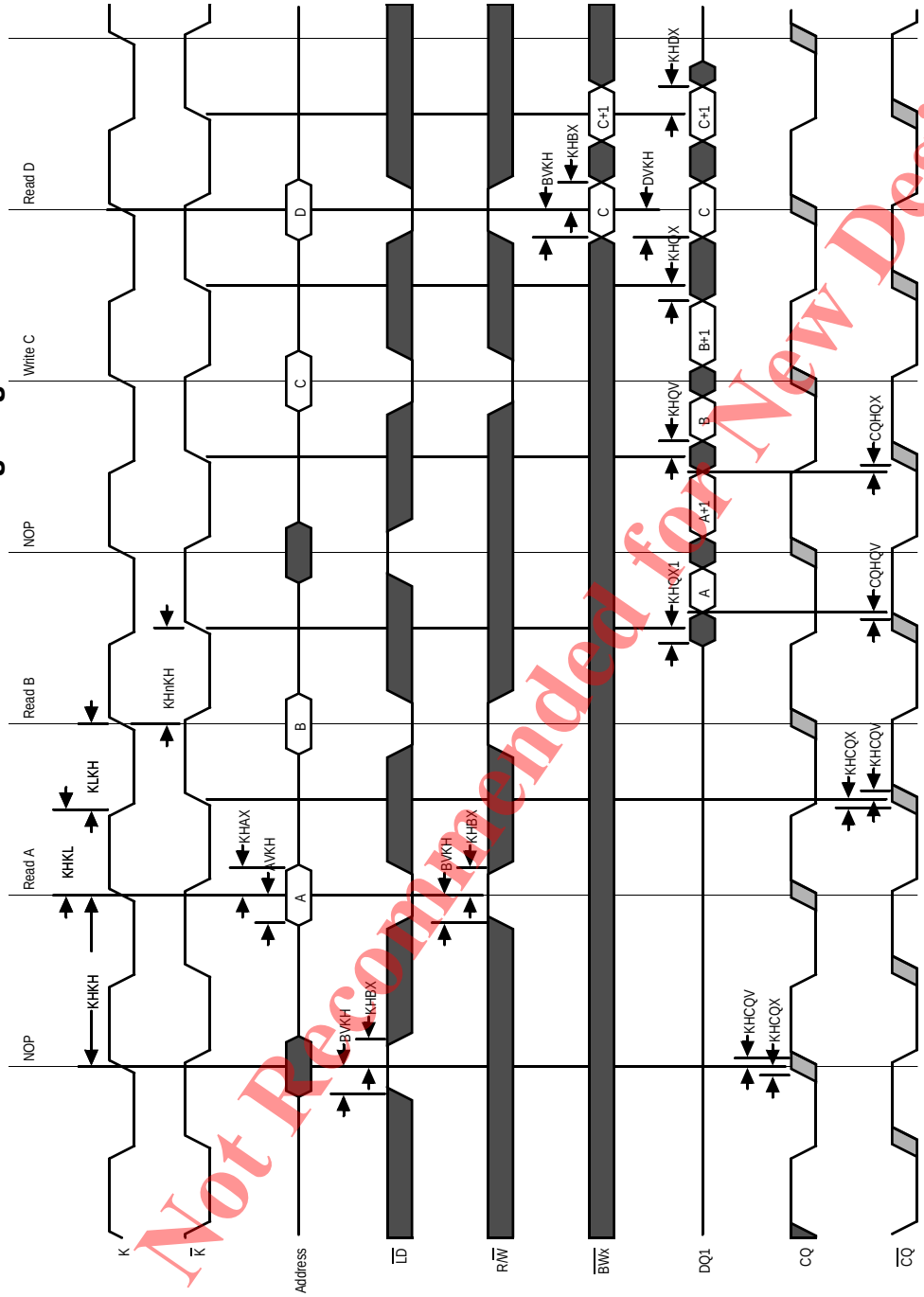

Not Recommended for New Design

 © 2011, GSI Technology

Specifications cited are subject to change without notice. For latest documentation see http://www.gsitechnology.com.

C and $\overline{C}$ Controlled Write First Timing Diagram

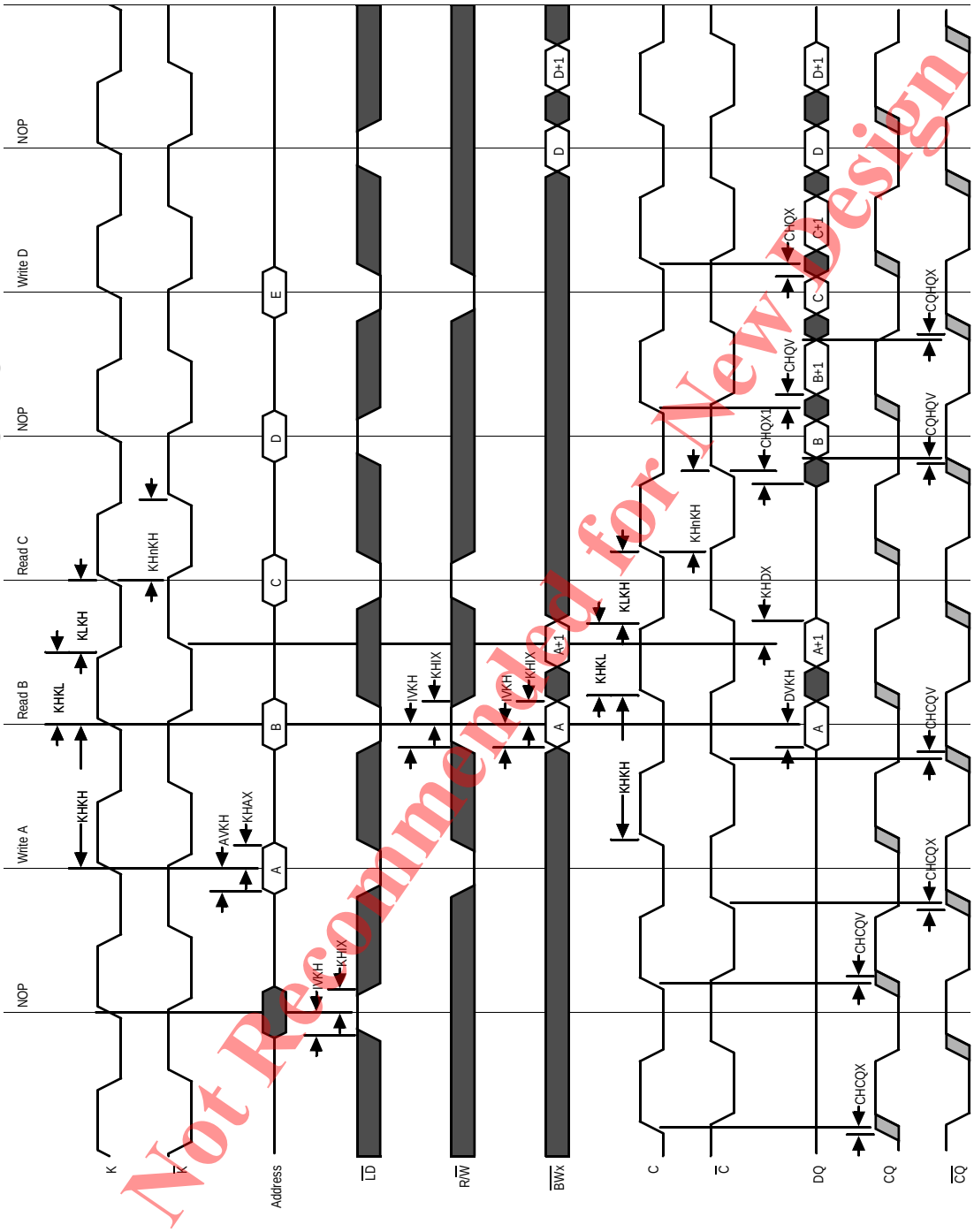

Not Recommended for New Design

 © 2011, GSI Technology

Specifications cited are subject to change without notice. For latest documentation see http://www.gsitechnology.com.

K and $\overline{K}$ Controlled Write First Timing Diagram

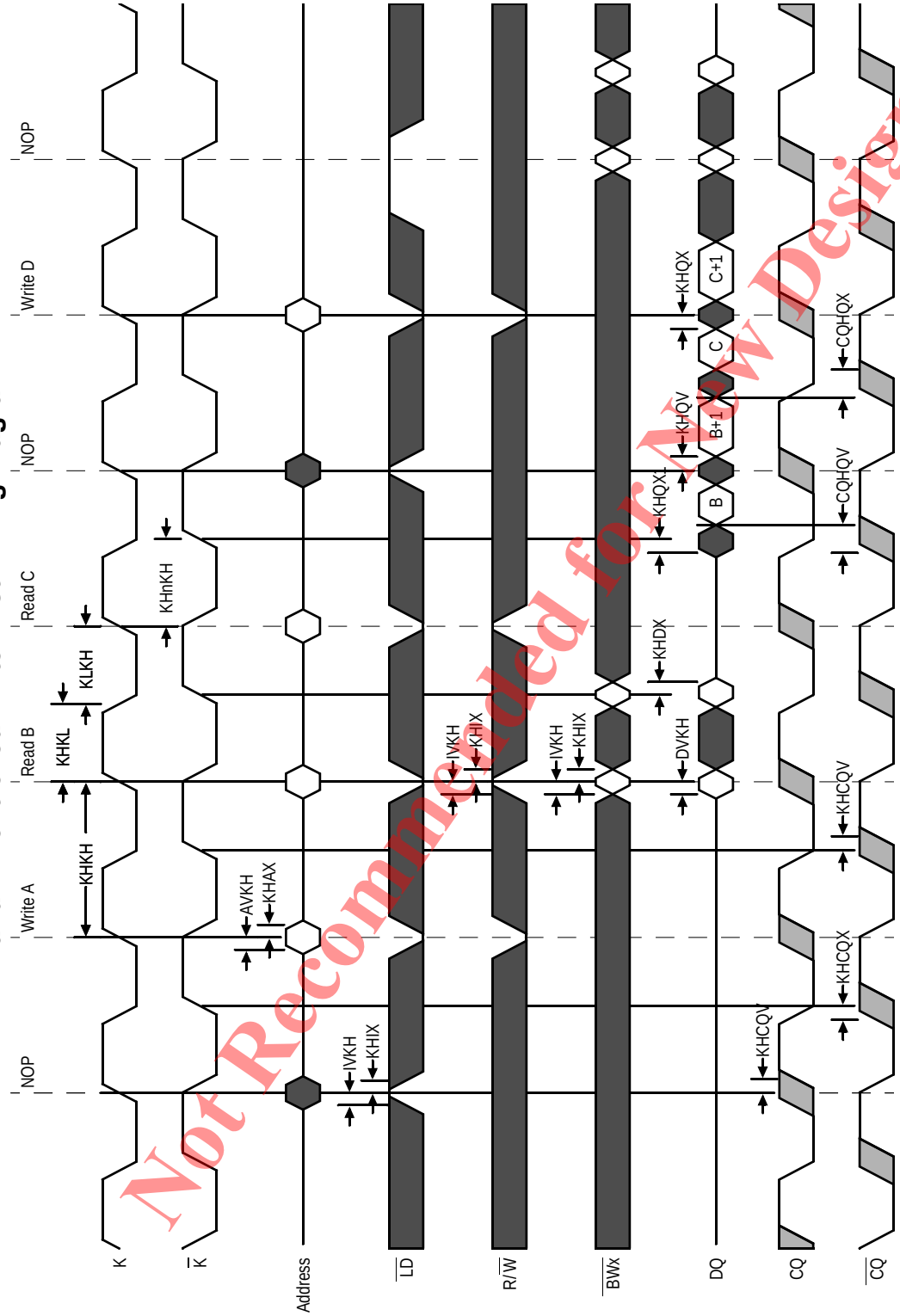

Not Recommended for New Design

 © 2011, GSI Technology

Specifications cited are subject to change without notice. For latest documentation see http://www.gsitechnology.com.

Not Recommended for New Design

JTAG Port Operation

Overview

The JTAG Port on this RAM operates in a manner that is compliant with IEEE Standard 1149.1-1990, a serial boundary scan interface standard (commonly referred to as JTAG). The JTAG Port input interface levels scale with V_{DD}. The JTAG output drivers are powered by V_{DD}.

Disabling the JTAG Port

It is possible to use this device without utilizing the JTAG port. The port is reset at power-up and will remain inactive unless clocked. TCK, TDI, and TMS are designed with internal pull-up circuits.To assure normal operation of the RAM with the JTAG Port unused, TCK, TDI, and TMS may be left floating or tied to either V_{DD} or V_{SS}. TDO should be left unconnected.

JTAG Pin Descriptions

Pin	Pin Name	I/O	Description
TCK	Test Clock	In	Clocks all TAP events. All inputs are captured on the rising edge of TCK and all outputs propagate from the falling edge of TCK.
TMS	Test Mode Select	In	The TMS input is sampled on the rising edge of TCK. This is the command input for the TAP controller state machine. An undriven TMS input will produce the same result as a logic one input level.
TDI	Test Data In	In	The TDI input is sampled on the rising edge of TCK. This is the input side of the serial registers placed between TDI and TDO. The register placed between TDI and TDO is determined by the state of the TAP Controller state machine and the instruction that is currently loaded in the TAP Instruction Register (refer to the TAP Controller State Diagram). An undriven TDI pin will produce the same result as a logic one input level.
TDO	Test Data Out	Out	Output that is active depending on the state of the TAP state machine. Output changes in response to the falling edge of TCK. This is the output side of the serial registers placed between TDI and TDO.

Note:
This device does not have a TRST (TAP Reset) pin. TRST is optional in IEEE 1149.1. The Test-Logic-Reset state is entered while TMS is held high for five rising edges of TCK. The TAP Controller is also reset automaticly at power-up.

JTAG Port Registers

Overview

The various JTAG registers, refered to as Test Access Port or TAP Registers, are selected (one at a time) via the sequences of 1s and 0s applied to TMS as TCK is strobed. Each of the TAP Registers is a serial shift register that captures serial input data on the rising edge of TCK and pushes serial data out on the next falling edge of TCK. When a register is selected, it is placed between the TDI and TDO pins.

Instruction Register

The Instruction Register holds the instructions that are executed by the TAP controller when it is moved into the Run, Test/Idle, or the various data register states. Instructions are 3 bits long. The Instruction Register can be loaded when it is placed between the TDI and TDO pins. The Instruction Register is automatically preloaded with the IDCODE instruction at power-up or whenever the controller is placed in Test-Logic-Reset state.

Bypass Register

The Bypass Register is a single bit register that can be placed between TDI and TDO. It allows serial test data to be passed through the RAM's JTAG Port to another device in the scan chain with as little delay as possible.

 © 2011, GSI Technology

Specifications cited are subject to change without notice. For latest documentation see http://www.gsitechnology.com.

Boundary Scan Register

The Boundary Scan Register is a collection of flip flops that can be preset by the logic level found on the RAM's input or I/O pins. The flip flops are then daisy chained together so the levels found can be shifted serially out of the JTAG Port's TDO pin. The Boundary Scan Register also includes a number of place holder flip flops (always set to a logic 1). The relationship between the device pins and the bits in the Boundary Scan Register is described in the Scan Order Table following. The Boundary Scan Register, under the control of the TAP Controller, is loaded with the contents of the RAMs I/O ring when the controller is in Capture-DR state and then is placed between the TDI and TDO pins when the controller is moved to Shift-DR state. SAMPLE-Z, SAMPLE/PRELOAD and EXTEST instructions can be used to activate the Boundary Scan Register.

JTAG TAP Block Diagram

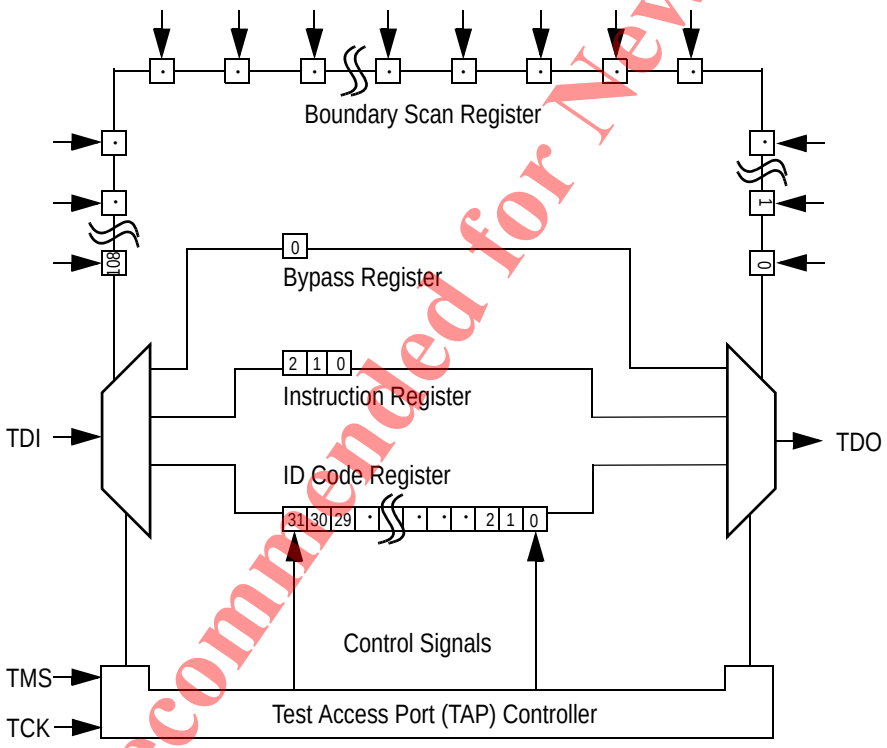

Identification (ID) Register

The ID Register is a 32-bit register that is loaded with a device and vendor specific 32-bit code when the controller is put in Capture-DR state with the IDCODE command loaded in the Instruction Register. The code is loaded from a 32-bit on-chip ROM. It describes various attributes of the RAM as indicated below. The register is then placed between the TDI and TDO pins when the controller is moved into Shift-DR state. Bit 0 in the register is the LSB and the first to reach TDO when shifting begins.

Not Recommended for New Design

 © 2011, GSI Technology

Specifications cited are subject to change without notice. For latest documentation see http://www.gsitechnology.com.

ID Register Contents

	See BSDL Model																				GSI Technology JEDEC Vendor ID Code											Presence Register
Bit #	31	30	29	28	27	26	25	24	23	22	21	20	19	18	17	16	15	14	13	12	11	10	9	8	7	6	5	4	3	2	1	0
	X	X	X	X	X	X	X	X	X	X	X	X	X	X	X	X	X	X	X	X	0	0	0	1	1	0	1	1	0	0	1	1

Tap Controller Instruction Set

Overview

There are two classes of instructions defined in the Standard 1149.1-1990; the standard (Public) instructions, and device specific (Private) instructions. Some Public instructions are mandatory for 1149.1 compliance. Optional Public instructions must be implemented in prescribed ways. The TAP on this device may be used to monitor all input and I/O pads, and can be used to load address, data or control signals into the RAM or to preload the I/O buffers.

When the TAP controller is placed in Capture-IR state the two least significant bits of the instruction register are loaded with 01. When the controller is moved to the Shift-IR state the Instruction Register is placed between TDI and TDO. In this state the desired instruction is serially loaded through the TDI input (while the previous contents are shifted out at TDO). For all instructions, the TAP executes newly loaded instructions only when the controller is moved to Update-IR state. The TAP instruction set for this device is listed in the following table.

Not Recommended for New Design

 © 2011, GSI Technology

Specifications cited are subject to change without notice. For latest documentation see http://www.gsitechnology.com.

JTAG Tap Controller State Diagram

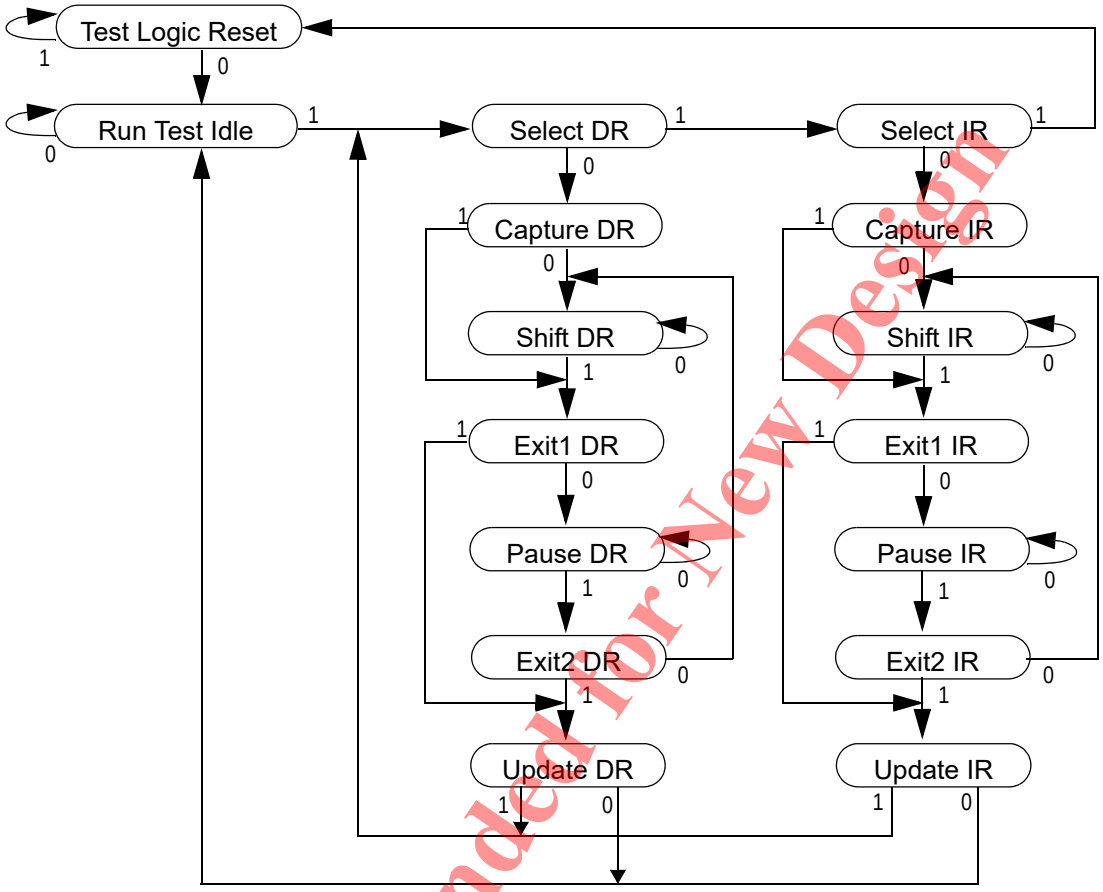

Not Recommended for New Design

Instruction Descriptions

BYPASS

When the BYPASS instruction is loaded in the Instruction Register the Bypass Register is placed between TDI and TDO. This occurs when the TAP controller is moved to the Shift-DR state. This allows the board level scan path to be shortened to facilitate testing of other devices in the scan path.

SAMPLE/PRELOAD

SAMPLE/PRELOAD is a Standard 1149.1 mandatory public instruction. When the SAMPLE / PRELOAD instruction is loaded in the Instruction Register, moving the TAP controller into the Capture-DR state loads the data in the RAMs input and I/O buffers into the Boundary Scan Register. Boundary Scan Register locations are not associated with an input or I/O pin, and are loaded with the default state identified in the Boundary Scan Chain table at the end of this section of the datasheet. Because the RAM clock is independent from the TAP Clock (TCK) it is possible for the TAP to attempt to capture the I/O ring contents while the input buffers are in transition (i.e. in a metastable state). Although allowing the TAP to sample metastable inputs will not harm the device, repeatable results cannot be expected. RAM input signals must be stabilized for long enough to meet the TAPs input data capture set-up plus hold time (tTS plus tTH). The RAMs clock inputs need not be paused for any other TAP operation except capturing the I/O ring contents into the Boundary Scan Register. Moving the controller to Shift-DR state then places the boundary scan register between the TDI and TDO pins.

EXTEST

EXTEST is an IEEE 1149.1 mandatory public instruction. It is to be executed whenever the instruction register is loaded with all logic 0s. The EXTEST command does not block or override the RAM's input pins; therefore, the RAM's internal state is still determined by its input pins.

 © 2011, GSI Technology

Specifications cited are subject to change without notice. For latest documentation see http://www.gsitechnology.com.

Typically, the Boundary Scan Register is loaded with the desired pattern of data with the SAMPLE/PRELOAD command. Then the EXTEST command is used to output the Boundary Scan Register's contents, in parallel, on the RAM's data output drivers on the falling edge of TCK when the controller is in the Update-IR state.

Alternately, the Boundary Scan Register may be loaded in parallel using the EXTEST command. When the EXTEST instruction is selected, the sate of all the RAM's input and I/O pins, as well as the default values at Scan Register locations not associated with a pin, are transferred in parallel into the Boundary Scan Register on the rising edge of TCK in the Capture-DR state, the RAM's output pins drive out the value of the Boundary Scan Register location with which each output pin is associated.

IDCODE

The IDCODE instruction causes the ID ROM to be loaded into the ID register when the controller is in Capture-DR mode and places the ID register between the TDI and TDO pins in Shift-DR mode. The IDCODE instruction is the default instruction loaded in at power up and any time the controller is placed in the Test-Logic-Reset state.

SAMPLE-Z

If the SAMPLE-Z instruction is loaded in the instruction register, all RAM outputs are forced to an inactive drive state (high-Z) and the Boundary Scan Register is connected between TDI and TDO when the TAP controller is moved to the Shift-DR state.

JTAG TAP Instruction Set Summary

Instruction	Code	Description	Notes
EXTEST	000	Places the Boundary Scan Register between TDI and TDO.	1
IDCODE	001	Preloads ID Register and places it between TDI and TDO.	1, 2
SAMPLE-Z	010	Captures I/O ring contents. Places the Boundary Scan Register between TDI and TDO. Forces all RAM output drivers to High-Z.	1
GSI	011	GSI private instruction.	1
SAMPLE/PRELOAD	100	Captures I/O ring contents. Places the Boundary Scan Register between TDI and TDO.	1
GSI	101	GSI private instruction.	1
GSI	110	GSI private instruction.	1
BYPASS	111	Places Bypass Register between TDI and TDO.	1

Notes:

1. Instruction codes expressed in binary, MSB on left, LSB on right.
2. Default instruction automatically loaded at power-up and in test-logic-reset state.

Not Recommended for New Design

 © 2011, GSI Technology

Specifications cited are subject to change without notice. For latest documentation see http://www.gsitechnology.com.

JTAG Port Recommended Operating Conditions and DC Characteristics

Parameter	Symbol	Min.	Max.	Unit	Notes
Test Port Input Low Voltage	V_{ILJ}	–0.3	0.3 * V_{DD}	V	1
Test Port Input High Voltage	V_{IHJ}	0.7 * V_{DD}	V_{DD} +0.3	V	1
TMS, TCK and TDI Input Leakage Current	I_{INHJ}	–300	1	uA	2
TMS, TCK and TDI Input Leakage Current	I_{INLJ}	–1	100	uA	3
TDO Output Leakage Current	I_{OLJ}	–1	1	uA	4
Test Port Output High Voltage	V_{OHJ}	V_{DD} – 0.2	—	V	5, 6
Test Port Output Low Voltage	V_{OLJ}	—	0.2	V	5, 7
Test Port Output CMOS High	V_{OHJC}	V_{DD} – 0.1	—	V	5, 8
Test Port Output CMOS Low	V_{OLJC}	—	0.1	V	5, 9

Notes:
1. Input Under/overshoot voltage must be –1 V < Vi < V_{DDn} +1 V not to exceed 2.9 V maximum, with a pulse width not to exceed 20% tTKC.
2. $V_{ILJ} \leq V_{IN} \leq V_{DDn}$
3. $0\ V \leq V_{IN} \leq V_{ILJn}$
4. Output Disable, V_{OUT} = 0 to V_{DDn}
5. The TDO output driver is served by the V_{DD} supply.
6. I_{OHJ} = –2 mA
7. I_{OLJ} = + 2 mA
8. I_{OHJC} = –100 uA
9. I_{OLJC} = +100 uA

JTAG Port AC Test Conditions

Parameter	Conditions
Input high level	V_{DD} – 0.2 V
Input low level	0.2 V
Input slew rate	1 V/ns
Input reference level	$V_{DD}/2$
Output reference level	$V_{DD}/2$

Notes:
1. Include scope and jig capacitance.
2. Test conditions as shown unless otherwise noted.

JTAG Port AC Test Load

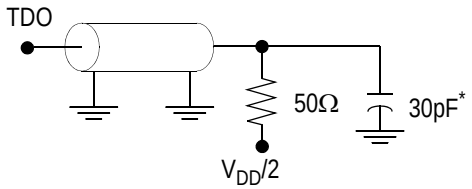

* Distributed Test Jig Capacitance

Not Recommended for New Design

 © 2011, GSI Technology

Specifications cited are subject to change without notice. For latest documentation see http://www.gsitechnology.com.

JTAG Port Timing Diagram

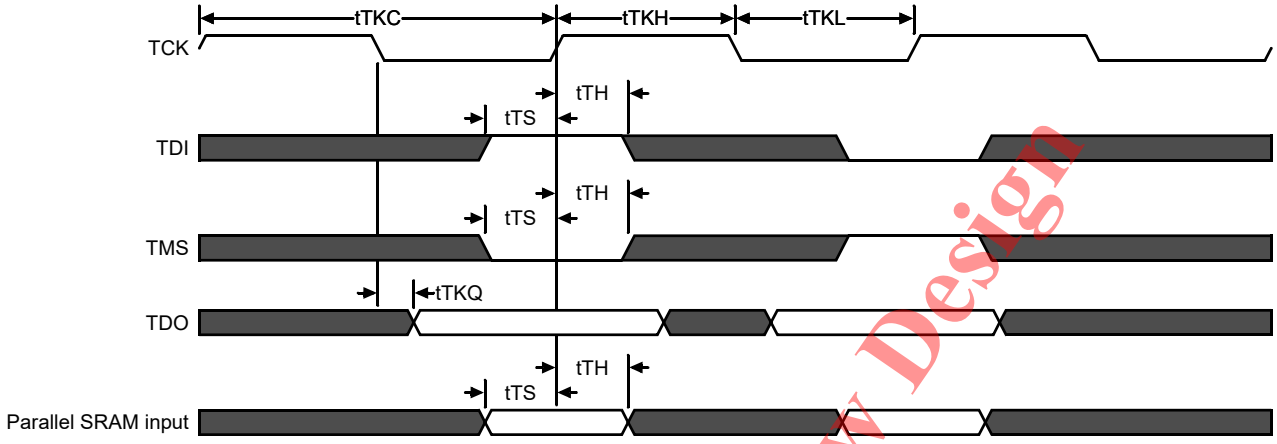

JTAG Port AC Electrical Characteristics

Parameter	Symbol	Min	Max	Unit
TCK Cycle Time	tTKC	50	—	ns
TCK Low to TDO Valid	tTKQ	—	20	ns
TCK High Pulse Width	tTKH	20	—	ns
TCK Low Pulse Width	tTKL	20	—	ns
TDI & TMS Set Up Time	tTS	10	—	ns
TDI & TMS Hold Time	tTH	10	—	ns

Not Recommended for New Design

 © 2011, GSI Technology

Specifications cited are subject to change without notice. For latest documentation see http://www.gsitechnology.com.

Package Dimensions—165-Bump FPBGA (Package E)

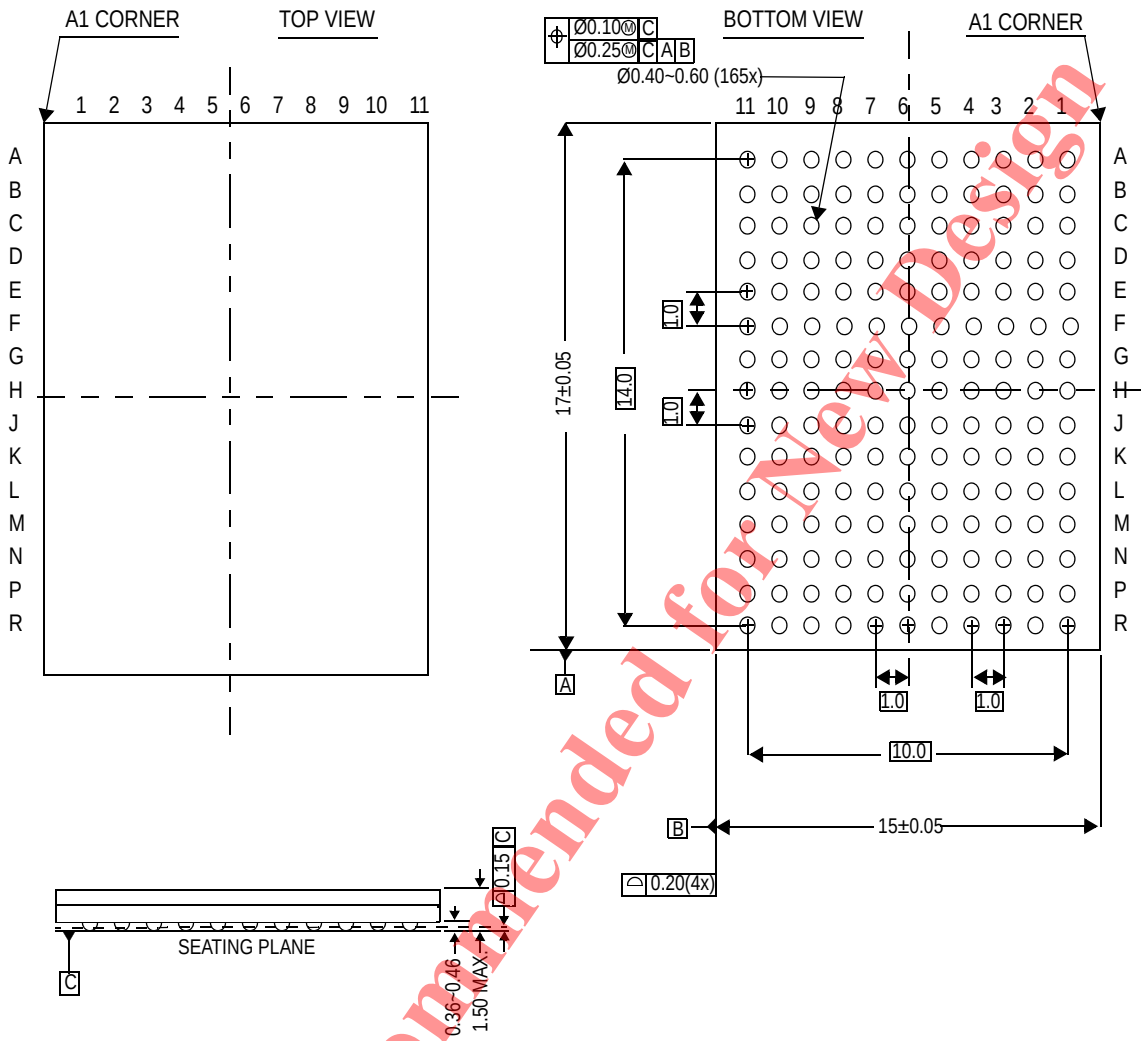

Not Recommended for New Design

 © 2011, GSI Technology

Specifications cited are subject to change without notice. For latest documentation see http://www.gsitechnology.com.

Ordering Information—GSI SigmaDDR-II SRAM

Org	Part Number1	Type	Package	Speed (MHz)	T_J[2]
16M x 8	GS81302T08E-375	SigmaDDR-II B2 SRAM	165-bump BGA	375	C
16M x 8	GS81302T08E-350	SigmaDDR-II B2 SRAM	165-bump BGA	350	C
16M x 8	GS81302T08E-333	SigmaDDR-II B2 SRAM	165-bump BGA	333	C
16M x 8	GS81302T08E-300	SigmaDDR-II B2 SRAM	165-bump BGA	300	C
16M x 8	GS81302T08E-250	SigmaDDR-II B2 SRAM	165-bump BGA	250	C
16M x 8	GS81302T08E-375I	SigmaDDR-II B2 SRAM	165-bump BGA	375	I
16M x 8	GS81302T08E-350I	SigmaDDR-II B2 SRAM	165-bump BGA	350	I
16M x 8	GS81302T08E-333I	SigmaDDR-II B2 SRAM	165-bump BGA	333	I
16M x 8	GS81302T08E-300I	SigmaDDR-II B2 SRAM	165-bump BGA	300	I
16M x 8	GS81302T08E-250I	SigmaDDR-II B2 SRAM	165-bump BGA	250	I
16M x 9	GS81302T09E-375	SigmaDDR-II B2 SRAM	165-bump BGA	375	C
16M x 9	GS81302T09E-350	SigmaDDR-II B2 SRAM	165-bump BGA	350	C
16M x 9	GS81302T09E-333	SigmaDDR-II B2 SRAM	165-bump BGA	333	C
16M x 9	GS81302T09E-300	SigmaDDR-II B2 SRAM	165-bump BGA	300	C
16M x 9	GS81302T09E-250	SigmaDDR-II B2 SRAM	165-bump BGA	250	C
16M x 9	GS81302T09E-375I	SigmaDDR-II B2 SRAM	165-bump BGA	375	I
16M x 9	GS81302T09E-350I	SigmaDDR-II B2 SRAM	165-bump BGA	350	I
16M x 9	GS81302T09E-333I	SigmaDDR-II B2 SRAM	165-bump BGA	333	I
16M x 9	GS81302T09E-300I	SigmaDDR-II B2 SRAM	165-bump BGA	300	I
16M x 9	GS81302T09E-250I	SigmaDDR-II B2 SRAM	165-bump BGA	250	I
8M x 18	GS81302T18E-375	SigmaDDR-II B2 SRAM	165-bump BGA	375	C
8M x 18	GS81302T18E-350	SigmaDDR-II B2 SRAM	165-bump BGA	350	C
8M x 18	GS81302T18E-333	SigmaDDR-II B2 SRAM	165-bump BGA	333	C
8M x 18	GS81302T18E-300	SigmaDDR-II B2 SRAM	165-bump BGA	300	C
8M x 18	GS81302T18E-250	SigmaDDR-II B2 SRAM	165-bump BGA	250	C
8M x 18	GS81302T18E-375I	SigmaDDR-II B2 SRAM	165-bump BGA	375	I
8M x 18	GS81302T18E-350I	SigmaDDR-II B2 SRAM	165-bump BGA	350	I
8M x 18	GS81302T18E-333I	SigmaDDR-II B2 SRAM	165-bump BGA	333	I
8M x 18	GS81302T18E-300I	SigmaDDR-II B2 SRAM	165-bump BGA	300	I
8M x 18	GS81302T18E-250I	SigmaDDR-II B2 SRAM	165-bump BGA	250	I
4M x 36	GS81302T36E-375	SigmaDDR-II B2 SRAM	165-bump BGA	375	C
4M x 36	GS81302T36E-350	SigmaDDR-II B2 SRAM	165-bump BGA	350	C

Notes:

1. For Tape and Reel add the character “T” to the end of the part number. Example: GS81302T36E-300T.
2. C = Commercial Temperature Range. I = Industrial Temperature Range.

Not Recommended for New Design

 © 2011, GSI Technology

Specifications cited are subject to change without notice. For latest documentation see http://www.gsitechnology.com.

Ordering Information—GSI SigmaDDR-II SRAM

Org	Part Number1	Type	Package	Speed (MHz)	T_J[2]
4M x 36	GS81302T36E-333	SigmaDDR-II B2 SRAM	165-bump BGA	333	C
4M x 36	GS81302T36E-300	SigmaDDR-II B2 SRAM	165-bump BGA	300	C
4M x 36	GS81302T36E-250	SigmaDDR-II B2 SRAM	165-bump BGA	250	C
4M x 36	GS81302T36E-375I	SigmaDDR-II B2 SRAM	165-bump BGA	375	I
4M x 36	GS81302T36E-350I	SigmaDDR-II B2 SRAM	165-bump BGA	350	I
4M x 36	GS81302T36E-333I	SigmaDDR-II B2 SRAM	165-bump BGA	333	I
4M x 36	GS81302T36E-300I	SigmaDDR-II B2 SRAM	165-bump BGA	300	I
4M x 36	GS81302T36E-250I	SigmaDDR-II B2 SRAM	165-bump BGA	250	I
16M x 8	GS81302T08GE-375	SigmaDDR-II B2 SRAM	RoHS-compliant 165-bump BGA	375	C
16M x 8	GS81302T08GE-350	SigmaDDR-II B2 SRAM	RoHS-compliant 165-bump BGA	350	C
16M x 8	GS81302T08GE-333	SigmaDDR-II B2 SRAM	RoHS-compliant 165-bump BGA	333	C
16M x 8	GS81302T08GE-300	SigmaDDR-II B2 SRAM	RoHS-compliant 165-bump BGA	300	C
16M x 8	GS81302T08GE-250	SigmaDDR-II B2 SRAM	RoHS-compliant 165-bump BGA	250	C
16M x 8	GS81302T08GE-375I	SigmaDDR-II B2 SRAM	RoHS-compliant 165-bump BGA	375	I
16M x 8	GS81302T08GE-350I	SigmaDDR-II B2 SRAM	RoHS-compliant 165-bump BGA	350	I
16M x 8	GS81302T08GE-333I	SigmaDDR-II B2 SRAM	RoHS-compliant 165-bump BGA	333	I
16M x 8	GS81302T08GE-300I	SigmaDDR-II B2 SRAM	RoHS-compliant 165-bump BGA	300	I
16M x 8	GS81302T08GE-250I	SigmaDDR-II B2 SRAM	RoHS-compliant 165-bump BGA	250	I
16M x 9	GS81302T09GE-375	SigmaDDR-II B2 SRAM	RoHS-compliant 165-bump BGA	375	C
16M x 9	GS81302T09GE-350	SigmaDDR-II B2 SRAM	RoHS-compliant 165-bump BGA	350	C
16M x 9	GS81302T09GE-333	SigmaDDR-II B2 SRAM	RoHS-compliant 165-bump BGA	333	C
16M x 9	GS81302T09GE-300	SigmaDDR-II B2 SRAM	RoHS-compliant 165-bump BGA	300	C
16M x 9	GS81302T09GE-250	SigmaDDR-II B2 SRAM	RoHS-compliant 165-bump BGA	250	C
16M x 9	GS81302T09GE-375I	SigmaDDR-II B2 SRAM	RoHS-compliant 165-bump BGA	375	I
16M x 9	GS81302T09GE-350I	SigmaDDR-II B2 SRAM	RoHS-compliant 165-bump BGA	350	I
16M x 9	GS81302T09GE-333I	SigmaDDR-II B2 SRAM	RoHS-compliant 165-bump BGA	333	I
16M x 9	GS81302T09GE-300I	SigmaDDR-II B2 SRAM	RoHS-compliant 165-bump BGA	300	I
16M x 9	GS81302T09GE-250I	SigmaDDR-II B2 SRAM	RoHS-compliant 165-bump BGA	250	I
8M x 18	GS81302T18GE-375	SigmaDDR-II B2 SRAM	RoHS-compliant 165-bump BGA	375	C
8M x 18	GS81302T18GE-350	SigmaDDR-II B2 SRAM	RoHS-compliant 165-bump BGA	350	C
8M x 18	GS81302T18GE-333	SigmaDDR-II B2 SRAM	RoHS-compliant 165-bump BGA	333	C
8M x 18	GS81302T18GE-300	SigmaDDR-II B2 SRAM	RoHS-compliant 165-bump BGA	300	C
8M x 18	GS81302T18GE-250	SigmaDDR-II B2 SRAM	RoHS-compliant 165-bump BGA	250	C

Notes:

1. For Tape and Reel add the character "T" to the end of the part number. Example: GS81302T36E-300T.
2. C = Commercial Temperature Range. I = Industrial Temperature Range.

Not Recommended for New Design

 © 2011, GSI Technology

Specifications cited are subject to change without notice. For latest documentation see http://www.gsitechnology.com.

Ordering Information—GSI SigmaDDR-II SRAM

Org	Part Number1	Type	Package	Speed (MHz)	T_J[2]
8M x 18	GS81302T18GE-375I	SigmaDDR-II B2 SRAM	RoHS-compliant 165-bump BGA	375	I
8M x 18	GS81302T18GE-350I	SigmaDDR-II B2 SRAM	RoHS-compliant 165-bump BGA	350	I
8M x 18	GS81302T18GE-333I	SigmaDDR-II B2 SRAM	RoHS-compliant 165-bump BGA	333	I
8M x 18	GS81302T18GE-300I	SigmaDDR-II B2 SRAM	RoHS-compliant 165-bump BGA	300	I
8M x 18	GS81302T18GE-250I	SigmaDDR-II B2 SRAM	RoHS-compliant 165-bump BGA	250	I
4M x 36	GS81302T36GE-375	SigmaDDR-II B2 SRAM	RoHS-compliant 165-bump BGA	375	C
4M x 36	GS81302T36GE-350	SigmaDDR-II B2 SRAM	RoHS-compliant 165-bump BGA	350	C
4M x 36	GS81302T36GE-333	SigmaDDR-II B2 SRAM	RoHS-compliant 165-bump BGA	333	C
4M x 36	GS81302T36GE-300	SigmaDDR-II B2 SRAM	RoHS-compliant 165-bump BGA	300	C
4M x 36	GS81302T36GE-250	SigmaDDR-II B2 SRAM	RoHS-compliant 165-bump BGA	250	C
4M x 36	GS81302T36GE-375I	SigmaDDR-II B2 SRAM	RoHS-compliant 165-bump BGA	375	I
4M x 36	GS81302T36GE-350I	SigmaDDR-II B2 SRAM	RoHS-compliant 165-bump BGA	350	I
4M x 36	GS81302T36GE-333I	SigmaDDR-II B2 SRAM	RoHS-compliant 165-bump BGA	333	I
4M x 36	GS81302T36GE-300I	SigmaDDR-II B2 SRAM	RoHS-compliant 165-bump BGA	300	I
4M x 36	GS81302T36GE-250I	SigmaDDR-II B2 SRAM	RoHS-compliant 165-bump BGA	250	I

Notes:

1. For Tape and Reel add the character “T” to the end of the part number. Example: GS81302T36E-300T.
2. C = Commercial Temperature Range. I = Industrial Temperature Range.

Not Recommended for New Design

 © 2011, GSI Technology

Specifications cited are subject to change without notice. For latest documentation see http://www.gsitechnology.com.

Revision History

File Name	Types of Changes Format or Content	Revisions
GS81302Txx_r1	Format	• Creation of new datasheet
GS81302Txx_r1.00a	Content	• Corrected Ordering Information Table
GS81302Txx_r1.01	Content	• Revised Four Bank Depth Expansion Schematic • Revised Power Up Information • Updated AC Characteristics Table • Updated 165 BGA Package Drawing • Updated JTAG Operating Port Information • (Rev1.01a: removed CQ reference from SAMPLE-Z section in JTAG Tap Instruction Set Summary) • (Rev1.01b: Updated DLL Lock time to 2048 cycles)
GS81302Txx_r1.02	Content	• Removed 200 MHz and 167 MHz speed bins • Added 375 MHz and 350 MHz speed bins • Updated thermal information • (Rev1.02a: Updated erroneous information in AC Char table)
GS81302Txx_r1.03	Content	• Added Op Currents • Updated for MP status • (Rev1.03a: Editorial updates) • (Rev1.03b: Updated DLL lock time in AC Char table) • (Rev1.03c: Corrected erroneous information in Input and Output Leakage Characteristics table)

Not Recommended for New Design

 © 2011, GSI Technology

Specifications cited are subject to change without notice. For latest documentation see http://www.gsitechnology.com.

Мы молодая и активно развивающаяся компания в области поставок электронных компонентов. Мы поставляем электронные компоненты отечественного и импортного производства напрямую от производителей и с крупнейших складов мира.

Благодаря сотрудничеству с мировыми поставщиками мы осуществляем комплексные и плановые поставки широчайшего спектра электронных компонентов.

Собственная эффективная логистика и склад в обеспечивает надежную поставку продукции в точно указанные сроки по всей России.

Мы осуществляем техническую поддержку нашим клиентам и предпродажную проверку качества продукции. На все поставляемые продукты мы предоставляем гарантию .

Осуществляем поставки продукции под контролем ВП МО РФ на предприятия военно-промышленного комплекса России , а также работаем в рамках 275 ФЗ с открытием отдельных счетов в уполномоченном банке. Система менеджмента качества компании соответствует требованиям ГОСТ ISO 9001.

Минимальные сроки поставки, гибкие цены, неограниченный ассортимент и индивидуальный подход к клиентам являются основой для выстраивания долгосрочного и эффективного сотрудничества с предприятиями радиоэлектронной промышленности, предприятиями ВПК и научно-исследовательскими институтами России.

С нами вы становитесь еще успешнее!

Наши контакты:

Телефон: +7 812 627 14 35

Электронная почта: sales@st-electron.ru

Адрес: 198099, Санкт-Петербург, Промышленная ул, дом № 19, литера Н, помещение 100-Н Офис 331