# WCSS0418V1F

## 256K x 18 Synchronous 3.3V Cache RAM

### Features

- **Supports 117-MHz microprocessor cache systems with zero wait states**
- **256K by 18 common I/O**
- **Fast clock-to-output times**
  - **— 7.5 ns (117-MHz version)**
- **Two-bit wrap-around counter supporting either interleaved or linear burst sequence**
- **Separate processor and controller address strobes provide direct interface with the processor and external cache controller**
- **Synchronous self-timed write**
- **Asynchronous output enable**
- **I/Os capable of 2.5–3.3V operation**
- **JEDEC-standard pinout**
- **100-pin TQFP packaging**
- **ZZ "sleep" mode**

### Functional Description

The WCSS0418V1F is a 3.3V, 256K by 18 synchronous cache RAM designed to interface with high-speed microprocessors with minimum glue logic. Maximum access delay from clock rise is 7.5 ns (117-MHz version). A 2-bit on-chip counter captures the first address in a burst and increments the address automatically for the rest of the burst access.

The allows WCSS0418V1F both interleaved or linear burst sequences, selected by the MODE input pin. A HIGH selects an interleaved burst sequence, while a LOW selects a linear burst sequence. Burst accesses can be initiated with the Processor Address Strobe ($\overline{ADSP}$) or the Cache Controller Address Strobe ($\overline{ADSC}$) inputs. Address advancement is controlled by the Address Advancement ($\overline{ADV}$) input.

A synchronous self-timed write mechanism is provided to simplify the write interface. A synchronous chip enable input and an asynchronous output enable input provide easy control for bank selection and output three-state control.

### Logic Block Diagram

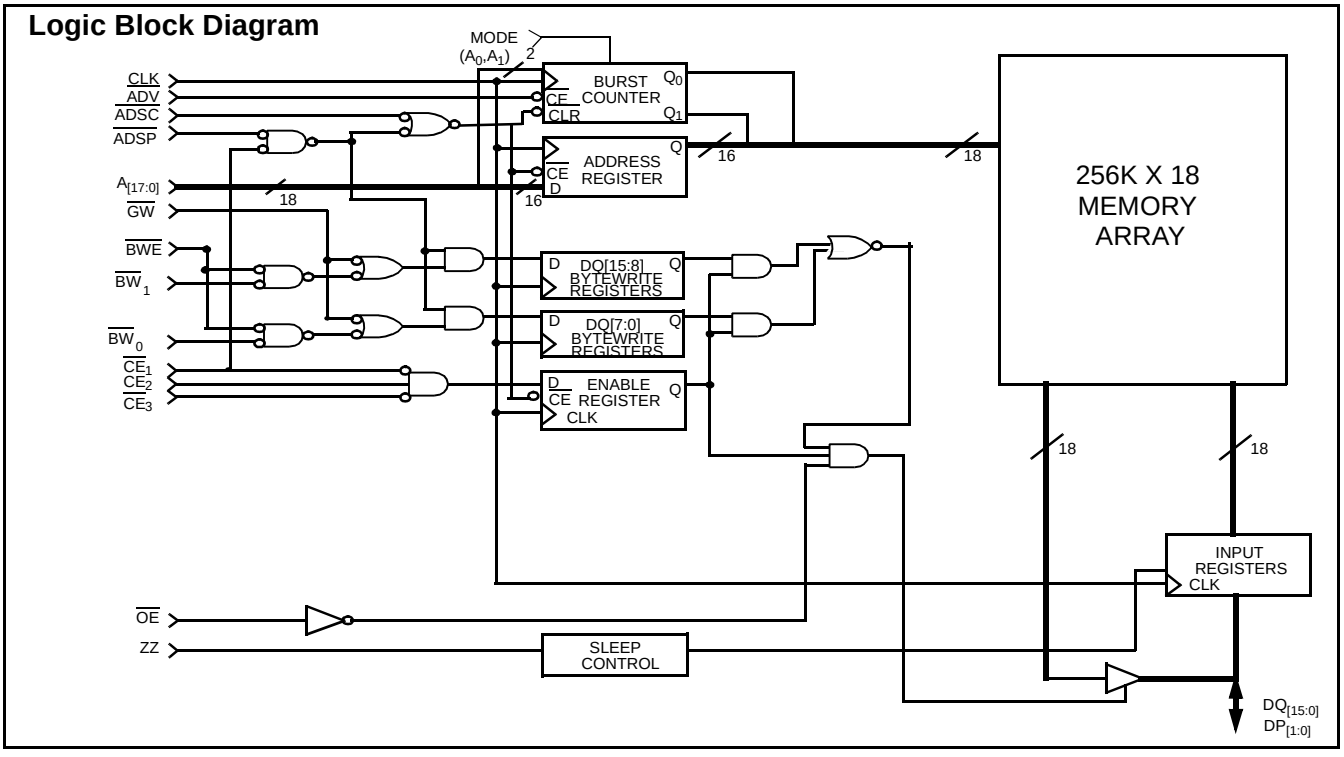


### Selection Guide

| | WCSS0418V1F-117 | WCSS0418V1F-100 |
|---|---|---|
| Maximum Access Time (ns) | 7.5 | 8.0 |
| Maximum Operating Current (mA) | 350 | 325 |
| Maximum Standby Current (mA) | 10.0 | 10.0 |

Intel and Pentium are registered trademarks of Intel Corporation.

## Pin Configurations

**100-Lead TQFP**

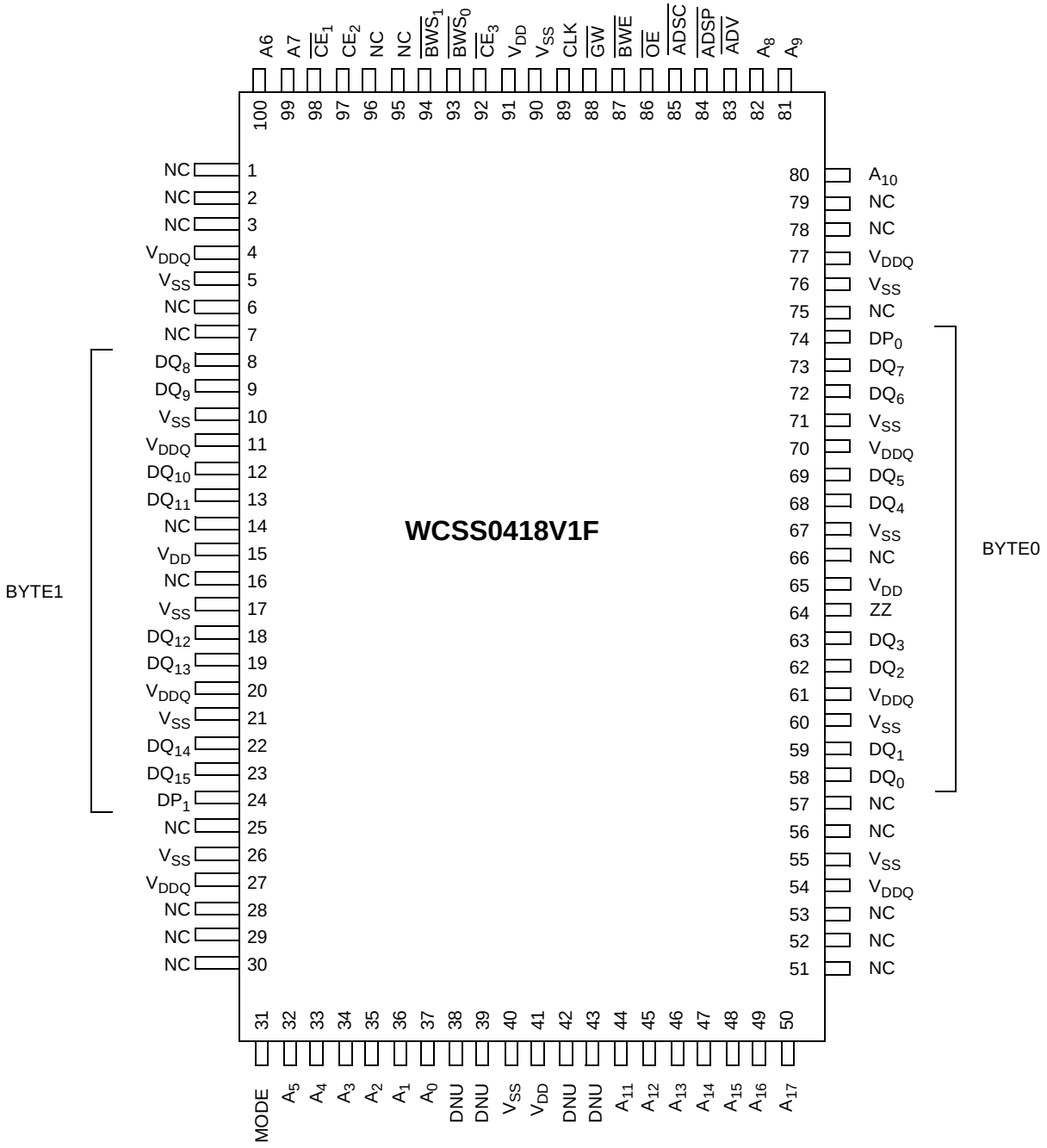

## Pin Configurations (continued)

**119-Ball BGA**

| | 1 | 2 | 3 | 4 | 5 | 6 | 7 |
|---|---|---|---|---|---|---|---|
| **A** | $V_{DDQ}$ | A | A | $\overline{ADSP}$ | A | A | $V_{DDQ}$ |
| **B** | NC | $CE_2$ | A | $\overline{ADSC}$ | A | $\overline{CE}_3$ | NC |
| **C** | NC | A | A | $V_{DD}$ | A | A | NC |
| **D** | $DQ_b$ | NC | $V_{SS}$ | NC | $V_{SS}$ | $DQP_a$ | NC |
| **E** | NC | $DQ_b$ | $V_{SS}$ | $\overline{CE}_1$ | $V_{SS}$ | NC | $DQ_a$ |
| **F** | $V_{DDQ}$ | NC | $V_{SS}$ | $\overline{OE}$ | $V_{SS}$ | $DQ_a$ | $V_{DDQ}$ |
| **G** | NC | $DQ_b$ | $\overline{BW}_b$ | $\overline{ADV}$ | $V_{ss}$ | NC | $DQ_a$ |
| **H** | $DQ_b$ | NC | $V_{SS}$ | $\overline{GW}$ | $V_{SS}$ | $DQ_a$ | NC |
| **J** | $V_{DDQ}$ | $V_{DD}$ | NC | $V_{DD}$ | NC | $V_{DD}$ | $V_{DDQ}$ |
| **K** | NC | $DQ_b$ | $V_{SS}$ | CLK | $V_{SS}$ | NC | $DQ_a$ |
| **L** | $DQ_b$ | NC | $V_{ss}$ | NC | $\overline{BW}_a$ | $DQ_a$ | NC |
| **M** | $V_{DDQ}$ | $DQ_b$ | $V_{SS}$ | $\overline{BWE}$ | $V_{SS}$ | NC | $V_{DDQ}$ |
| **N** | $DQ_b$ | NC | $V_{SS}$ | A1 | $V_{SS}$ | $DQ_a$ | NC |
| **P** | NC | $DQP_b$ | $V_{SS}$ | A0 | $V_{SS}$ | NC | $DQ_a$ |
| **R** | NC | A | MODE | $V_{DD}$ | $V_{SS}$ | A | NC |
| **T** | NC | A | A | NC | A | A | ZZ |
| **U** | $V_{DDQ}$ | NC | NC | NC | NC | NC | $V_{DDQ}$ |

## Pin Descriptions

| Name | I/O | Description |
|---|---|---|
| $\overline{ADSC}$ | Input-Synchronous | Address Strobe from Controller, sampled on the rising edge of CLK. When asserted LOW, $A_{[17:0]}$ is captured in the address registers. $A_{[1:0]}$ are also loaded into the burst counter. When $\overline{ADSP}$ and $\overline{ADSC}$ are both asserted, only $\overline{ADSP}$ is recognized. |
| $\overline{ADSP}$ | Input-Synchronous | Address Strobe from Processor, sampled on the rising edge of CLK. When asserted LOW, $A_{[17:0]}$ is captured in the address registers. $A_{[1:0]}$ are also loaded into the burst counter. When $\overline{ADSP}$ and $\overline{ADSC}$ are both asserted, only $\overline{ADSP}$ is recognized. $\overline{ASDP}$ is ignored when $\overline{CE}_1$ is deasserted HIGH. |
| $A_{[1:0]}$ | Input-Synchronous | $A_1$, $A_0$ address inputs, These inputs feed the on-chip burst counter as the LSBs as well as being used to access a particular memory location in the memory array. |
| $A_{[17:2]}$ | Input-Synchronous | Address Inputs used in conjunction with $A_{[1:0]}$ to select one of the 256K address locations. Sampled at the rising edge of the CLK, if $\overline{CE}_1$, $CE_2$, and $\overline{CE}_3$ are sampled active, and $\overline{ADSP}$ or $\overline{ADSC}$ is active LOW. |
| $\overline{BWS}_{[1:0]}$ | Input-Synchronous | Byte Write Select Inputs, active LOW. Qualified with $\overline{BWE}$ to conduct byte writes. Sampled on the rising edge. $\overline{BWS}_0$ controls $DQ_{[7:0]}$ and $DP_0$, $\overline{BWS}_1$ controls $DQ_{[15:8]}$ and $DP_1$. See Write Cycle Descriptions table for further details. |
| $\overline{ADV}$ | Input-Synchronous | Advance input used to advance the on-chip address counter. When LOW the internal burst counter is advanced in a burst sequence. The burst sequence is selected using the MODE input. |
| $\overline{BWE}$ | Input-Synchronous | Byte Write Enable Input, active LOW. Sampled on the rising edge of CLK. This signal must be asserted LOW to conduct a byte write. |
| $\overline{GW}$ | Input-Synchronous | Global Write Input, active LOW. Sampled on the rising edge of CLK. This signal is used to conduct a global write, independent of the state of $\overline{BWE}$ and $\overline{BWS}_{[1:0]}$. Global writes override byte writes. |
| CLK | Input-Clock | Clock input. Used to capture all synchronous inputs to the device. |
| $\overline{CE}_1$ | Input-Synchronous | Chip Enable 1 Input, active LOW. Sampled on the rising edge of CLK. Used in conjunction with $CE_2$ and $\overline{CE}_3$ to select/deselect the device. $\overline{CE}_1$ gates $\overline{ADSP}$. |

## Pin Descriptions (continued)

| Name | I/O | Description |
|---|---|---|
| $CE_2$ | Input-Synchronous | Chip Enable 2 Input, active HIGH. Sampled on the rising edge of CLK. Used in conjunction with $\overline{CE_1}$ and $\overline{CE_3}$ to select/deselect the device. |
| $\overline{CE_3}$ | Input-Synchronous | Chip Enable 3 Input, active LOW. Sampled on the rising edge of CLK. Used in conjunction with $\overline{CE_1}$ and $CE_2$ to select/deselect the device. |
| $\overline{OE}$ | Input-Asynchronous | Output Enable, asynchronous input, active LOW. Controls the direction of the I/O pins. When LOW, the I/O pins behave as outputs. When deasserted HIGH, I/O pins are three-stated, and act as input data pins. |
| ZZ | Input-Asynchronous | Snooze Input. Active HIGH asynchronous. When HIGH, the device enters a low-power standby mode in which all other inputs are ignored, but the data in the memory array is maintained. Leaving ZZ floating or NC will default the device into an active state. ZZ pin has an internal pull-down. |
| MODE | - | Mode Input. Selects the burst order of the device. Tied HIGH selects the interleaved burst order. Pulled LOW selects the linear burst order. When left floating or NC, defaults to interleaved burst order. Mode pin has an internal pull-up. |
| $DQ_{[15:0]}$ | I/O-Synchronous | Bidirectional Data I/O lines. As inputs, they feed into an on-chip data register that is triggered by the rising edge of CLK. As outputs, they deliver the data contained in the memory location specified by $A_{[17:0]}$ during the previous clock rise of the read cycle. The direction of the pins is controlled by $\overline{OE}$ in conjunction with the internal control logic. When $\overline{OE}$ is asserted LOW, the pins behave as outputs. When HIGH, $DQ_{[15:0]}$ and $DP_{[1:0]}$ are placed in a three-state condition. The outputs are automatically three-stated when a WRITE cycle is detected. |
| $DP_{[1:0]}$ | I/O-Synchronous | Bidirectional Data Parity lines. These behave identical to $DQ_{[15:0]}$ described above. These signals can be used as parity bits for bytes 0 and 1 respectively. |
| $V_{DD}$ | Power Supply | Power supply inputs to the core of the device. Should be connected to 3.3V power supply. |
| $V_{SS}$ | Ground | Ground for the device. Should be connected to ground of the system. |
| $V_{DDQ}$ | I/O Power Supply | Power supply for the I/O circuitry. Should be connected to a 2.5 or 3.3V power supply. |
| NC | - | No connects. |
| DNU | - | Do not use pins. Should be left unconnected or tied LOW. |

## Functional Overview

All synchronous inputs pass through input registers controlled by the rising edge of the clock. Maximum access delay from the clock rise ($t_{CDV}$) is 7.5 ns (117-MHz device).

The WCSS0418V1F supports secondary cache in systems utilizing either a linear or interleaved burst sequence. The interleaved burst order supports Pentium and i486 processors. The linear burst sequence is suited for processors that utilize a linear burst sequence. The burst order is user selectable, and is determined by sampling the MODE input. Accesses can be initiated with either the Processor Address Strobe ($\overline{ADSP}$) or the Controller Address Strobe ($\overline{ADSC}$). Address advancement through the burst sequence is controlled by the $\overline{ADV}$ input. A two-bit on-chip wraparound burst counter captures the first address in a burst sequence and automatically increments the address for the rest of the burst access.

Byte write operations are qualified with the Byte Write Enable ($\overline{BWE}$) and Byte Write Select ($\overline{BW_{[3:0]}}$) inputs. A Global Write Enable ($\overline{GW}$) overrides all byte write inputs and writes data to all four bytes. All writes are simplified with on-chip synchronous self-timed write circuitry.

Three synchronous Chip Selects ($\overline{CE_1}$, $CE_2$, $\overline{CE_3}$) and an asynchronous Output Enable ($\overline{OE}$) provide for easy bank selection and output three-state control. $\overline{ADSP}$ is ignored if $\overline{CE_1}$ is HIGH.

### Single Read Accesses

A single read access is initiated when the following conditions are satisfied at clock rise: (1) $\overline{CE_1}$, $CE_2$, and $\overline{CE_3}$ are all asserted active, and (2) $\overline{ADSP}$ or $\overline{ADSC}$ is asserted LOW (if the access is initiated by $\overline{ADSC}$, the write inputs must be deasserted during this first cycle). The address presented to the address inputs is latched into the address register and the burst counter/control logic and presented to the memory core. If the $\overline{OE}$ input is asserted LOW, the requested data will be available at the data outputs a maximum to $t_{CDV}$ after clock rise. $\overline{ADSP}$ is ignored if $\overline{CE_1}$ is HIGH.

### Single Write Accesses Initiated by $\overline{ADSP}$

This access is initiated when the following conditions are satisfied at clock rise: (1) $\overline{CE_1}$, $CE_2$, and $\overline{CE_3}$ are all asserted active, and (2) $\overline{ADSP}$ is asserted LOW. The addresses presented are loaded into the address register and the burst counter/control logic and delivered to the RAM core. The write inputs ($\overline{GW}$, $\overline{BWE}$, and $\overline{BWS_{[1:0]}}$) are ignored during this first clock cycle. If the write inputs are asserted active (see Write Cycle Descriptions table for appropriate states that indicate a write) on the next clock rise, the appropriate data will be latched and written into the device. Byte writes are allowed. During byte writes, $\overline{BWS_0}$ controls $DQ_{[7:0]}$ and $DP_0$ while $\overline{BWS_1}$ controls $DQ_{[15:8]}$ and $DP_1$. All I/Os are three-stated during a byte write. Since these are common I/O devices, the asynchronous $\overline{OE}$ input signal must be deasserted and the

I/Os must be three-stated prior to the presentation of data to $DQ_{[15:0]}$ and $DP_{[1:0]}$. As a safety precaution, the data lines are three-stated once a write cycle is detected, regardless of the state of $\overline{OE}$.

### Single Write Accesses Initiated by $\overline{ADSC}$

This write access is initiated when the following conditions are satisfied at clock rise: (1) $\overline{CE_1}$, $CE_2$, and $\overline{CE_3}$ are all asserted active, (2) $\overline{ADSC}$ is asserted LOW, (3) $\overline{ADSP}$ is deasserted HIGH, and (4) the write input signals (GW, $\overline{BWE}$, and $\overline{BWS_{[1:0]}}$) indicate a write access. $\overline{ADSC}$ is ignored if $\overline{ADSP}$ is active LOW.

The addresses presented are loaded into the address register, burst counter/control logic and delivered to the RAM core. The information presented to $DQ_{[15:0]}$ and $DP_{[1:0]}$ will be written into the specified address location. Byte writes are allowed, with $\overline{BWS_0}$ controlling $DQ_{[7:0]}$ and $DP_0$ while $\overline{BWS_1}$ controlling $DQ_{[15:8]}$ and $DP_1$. All I/Os are three-stated when a write is detected, even a byte write. Since these are common I/O devices, the asynchronous $\overline{OE}$ input signal must be deasserted and the I/Os must be three-stated prior to the presentation of data to $DQ_{[15:0]}$ and $DP_{[1:0]}$. As a safety precaution, the data lines are three-stated once a write cycle is detected, regardless of the state of $\overline{OE}$.

## Burst Sequences

This family of devices provides a 2-bit wrap-around burst counter inside the SRAM. The burst counter is fed by $A_{[1:0]}$, and can follow either a linear or interleaved burst order. The burst order is determined by the state of the MODE input. A LOW on MODE will select a linear burst sequence. A HIGH on MODE will select an interleaved burst order. Leaving MODE unconnected will cause the device to default to an interleaved burst sequence.

**Table 1. Counter Implementation for the Intel® Pentium®/80486 Processor's Sequence**

| First Address | Second Address | Third Address | Fourth Address |
|---|---|---|---|
| $A_{X+1}, A_X$ | $A_{X+1}, A_X$ | $A_{X+1}, A_X$ | $A_{X+1}, A_X$ |
| 00 | 01 | 10 | 11 |
| 01 | 00 | 11 | 10 |
| 10 | 11 | 00 | 01 |
| 11 | 10 | 01 | 00 |

**Table 2. Counter Implementation for a Linear Sequence**

| First Address | Second Address | Third Address | Fourth Address |
|---|---|---|---|
| $A_{X+1}, A_X$ | $A_{X+1}, A_X$ | $A_{X+1}, A_X$ | $A_{X+1}, A_X$ |
| 00 | 01 | 10 | 11 |
| 01 | 10 | 11 | 00 |
| 10 | 11 | 00 | 01 |
| 11 | 00 | 01 | 10 |

### Sleep Mode

The ZZ input pin is an asynchronous input. Asserting ZZ HIGH places the SRAM in a power conservation "sleep" mode. Two clock cycles are required to enter into or exit from this "sleep" mode. While in this mode, data integrity is guaranteed. Accesses pending when entering the "sleep" mode are not considered valid nor is the completion of the operation guaranteed. The device must be deselected prior to entering the "sleep" mode. $\overline{CE_1}$, $CE_2$, $\overline{CE_3}$, $\overline{ADSP}$, and $\overline{ADSC}$ must remain inactive for the duration of $t_{ZZREC}$ after the ZZ input returns LOW.

## Cycle Description Table[1, 2, 3]

| Cycle Description | ADD Used | $\overline{CE_1}$ | $\overline{CE_3}$ | $CE_2$ | ZZ | $\overline{ADSP}$ | $\overline{ADSC}$ | $\overline{ADV}$ | $\overline{WE}$ | $\overline{OE}$ | CLK | DQ |
|---|---|---|---|---|---|---|---|---|---|---|---|---|
| Deselected Cycle, Power-down | None | H | X | X | L | X | L | X | X | X | L-H | High-Z |
| Deselected Cycle, Power-down | None | L | X | L | L | L | X | X | X | X | L-H | High-Z |
| Deselected Cycle, Power-down | None | L | H | X | L | L | X | X | X | X | L-H | High-Z |
| Deselected Cycle, Power-down | None | L | X | L | L | H | L | X | X | X | L-H | High-Z |
| Deselected Cycle, Power-down | None | X | X | X | L | H | L | X | X | X | L-H | High-Z |
| SNOOZE MODE, Power-Down | None | X | X | X | H | X | X | X | X | X | X | High-Z |
| READ Cycle, Begin Burst | External | L | L | H | L | L | X | X | X | L | L-H | Q |
| READ Cycle, Begin Burst | External | L | L | H | L | L | X | X | X | H | L-H | High-Z |
| WRITE Cycle, Begin Burst | External | L | L | H | L | H | L | X | L | X | L-H | D |
| READ Cycle, Begin Burst | External | L | L | H | L | H | L | X | H | L | L-H | Q |
| READ Cycle, Begin Burst | External | L | L | H | L | H | L | X | H | H | L-H | High-Z |
| READ Cycle, Continue Burst | Next | X | X | X | L | H | H | L | H | L | L-H | Q |
| READ Cycle, Continue Burst | Next | X | X | X | L | H | H | L | H | H | L-H | High-Z |
| READ Cycle, Continue Burst | Next | H | X | X | L | X | H | L | H | L | L-H | Q |
| READ Cycle, Continue Burst | Next | H | X | X | L | X | H | L | H | H | L-H | High-Z |
| WRITE Cycle, Continue Burst | Next | X | X | X | L | H | H | L | L | X | L-H | D |
| WRITE Cycle, Continue Burst | Next | H | X | X | L | X | H | L | L | X | L-H | D |
| READ Cycle, Suspend Burst | Current | X | X | X | L | H | H | H | H | L | L-H | Q |
| READ Cycle, Suspend Burst | Current | X | X | X | L | H | H | H | H | H | L-H | High-Z |
| READ Cycle, Suspend Burst | Current | H | X | X | L | X | H | H | H | L | L-H | Q |
| READ Cycle, Suspend Burst | Current | H | X | X | L | X | H | H | H | H | L-H | High-Z |
| WRITE Cycle, Suspend Burst | Current | X | X | X | L | H | H | H | L | X | L-H | D |
| WRITE Cycle, Suspend Burst | Current | H | X | X | L | X | H | H | L | X | L-H | D |

## ZZ Mode Electrical Characteristics

| Parameter | Description | Test Conditions | Min | Max | Unit |
|---|---|---|---|---|---|
| $I_{DDZZ}$ | Snooze mode standby current | $ZZ \geq V_{DD} - 0.2V$ | | 10 | mA |
| $t_{ZZS}$ | Device operation to ZZ | $ZZ \geq V_{DD} - 0.2V$ | | $2t_{CYC}$ | ns |
| $t_{ZZREC}$ | ZZ recovery time | $ZZ \leq 0.2V$ | $2t_{CYC}$ | | ns |

**Notes:**

1. X = "Don't Care," 1 = Logic HIGH, 0 = Logic LOW.
2. The SRAM always initiates a read cycle when ADSP asserted, regardless of the state of $\overline{GW}$, $\overline{BWE}$, or $\overline{BWS_{[1:0]}}$. Writes may occur only on subsequent clocks after the ADSP or with the assertion of ADSC. As a result, $\overline{OE}$ must be driven HIGH prior to the start of the write cycle to allow the outputs to three-state. $\overline{OE}$ is a "Don't Care" for the remainder of the write cycle.
3. $\overline{OE}$ is asynchronous and is not sampled with the clock rise. During a read cycle DQ = High-Z when $\overline{OE}$ is inactive, and DQ=data when $\overline{OE}$ is active.

## Write Cycle Descriptions[1, 2, 3, 4]

| Function | $\overline{GW}$ | $\overline{BWE}$ | $\overline{BWS_1}$ | $\overline{BWS_0}$ |
|---|---|---|---|---|
| Read | 1 | 1 | X | X |
| Read | 1 | 0 | 1 | 1 |
| Write Byte 0 - $DQ_{[7:0]}$ and $DP_0$ | 1 | 0 | 1 | 0 |
| Write Byte 1 - $DQ_{[15:8]}$ and $DP_1$ | 1 | 0 | 0 | 1 |
| Write All Bytes | 1 | 0 | 0 | 0 |
| Write All Bytes | 0 | X | X | X |

## Maximum Ratings

(Above which the useful life may be impaired. For user guidelines, not tested.)

Storage Temperature .....–65°C to +150°C

Ambient Temperature with Power Applied.....–55°C to +125°C

Supply Voltage on $V_{DD}$ Relative to GND .....–0.5V to +4.6V

DC Voltage Applied to Outputs in High Z State[5].....–0.5V to $V_{DD}$ + 0.5V

DC Input Voltage[5].....–0.5V to $V_{DD}$ + 0.5V

Current into Outputs (LOW) ..... 20 mA

Static Discharge Voltage ..... >2001V (per MIL-STD-883, Method 3015)

Latch-Up Current..... >200 mA

## Operating Range

| Range | Ambient Temperature[6] | $V_{DD}$ | $V_{DDQ}$ |
|---|---|---|---|
| Com'l | 0°C to +70°C | 3.135V to 3.6V | 2.375V to $V_{DD}$ |
| Ind'l | –40°C +70°C | | |

## Electrical Characteristics Over the Operating Range

| Parameter | Description | Test Conditions | 7C1325B Min. | 7C1325B Max. | Unit |
|---|---|---|---|---|---|
| $V_{OH}$ | Output HIGH Voltage | $V_{DDQ}$ = 3.3V, $V_{DD}$ = Min., $I_{OH}$ = –4.0 mA | 2.4 | | V |
| | | $V_{DDQ}$ = 2.5V, $V_{DD}$ = Min., $I_{OH}$ = –2.0 mA | 2.0 | | V |
| $V_{OL}$ | Output LOW Voltage | $V_{DDQ}$ = 3.3V, $V_{DD}$ = Min., $I_{OL}$ = 8.0 mA | | 0.4 | V |
| | | $V_{DDQ}$ = 2.5V, $V_{DD}$ = Min., $I_{OL}$ = 2.0 mA | | 0.7 | V |
| $V_{IH}$ | Input HIGH Voltage | $V_{DDQ}$ = 3.3V | 2.0 | $V_{DD}$ + 0.3V | V |
| $V_{IH}$ | Input HIGH Voltage | $V_{DDQ}$ = 2.5V | 1.7 | $V_{DD}$ + 0.3V | V |
| $V_{IL}$ | Input LOW Voltage[5] | $V_{DDQ}$ = 3.3V | –0.3 | 0.8 | V |
| $V_{IL}$ | Input LOW Voltage[5] | $V_{DDQ}$ = 2.5V | –0.3 | 0.7 | V |
| $I_X$ | Input Load Current (except ZZ and MODE) | GND ≤ $V_I$ ≤ $V_{DDQ}$ | –1 | 1 | µA |
| | Input Current of MODE | Input = $V_{SS}$ | –30 | | µA |
| | | Input = $V_{DDQ}$ | | 5 | µA |
| | Input Current of ZZ | Input = $V_{SS}$ | –5 | | µA |
| | | Input = $V_{DDQ}$ | | 30 | µA |
| $I_{OZ}$ | Output Leakage Current | GND ≤ $V_I$ ≤ $V_{DD}$, Output Disabled | –5 | 5 | µA |

**Notes:**

4. When a write cycle is detected, all I/Os are three-stated, even during byte writes.
5. Minimum voltage equals –2.0V for pulse durations of less than 20 ns.
6. $T_A$ is the case temperature.

## Electrical Characteristics Over the Operating Range (continued)

| Parameter | Description | Test Conditions | | 7C1325B Min. | 7C1325B Max. | Unit |
|---|---|---|---|---|---|---|
| $I_{OS}$ | Output Short Circuit Current[7] | $V_{DD}$ = Max., $V_{OUT}$ = GND | | | –300 | mA |
| $I_{DD}$ | $V_{DD}$ Operating Supply Current | $V_{DD}$ = Max., $I_{OUT}$ = 0 mA, f = $f_{MAX}$= $1/t_{CYC}$ | 8.5-ns cycle, 117 MHz | | 350 | mA |
| | | | 10-ns cycle, 100 MHz | | 325 | mA |
| $I_{SB1}$ | Automatic CE Power-Down Current—TTL Inputs | Max. $V_{DD}$, Device Deselected, $V_{IN} \geq V_{IH}$ or $V_{IN} \leq V_{IL}$, f = $f_{MAX}$, inputs switching | 8.5-ns cycle, 117 MHz | | 125 | mA |
| | | | 10-ns cycle, 100 MHz | | 110 | mA |
| $I_{SB2}$ | Automatic CE Power-Down Current—CMOS Inputs | Max. $V_{DD}$, Device Deselected, $V_{IN} \geq V_{DD}$ – 0.3V or $V_{IN} \leq$ 0.3V, f = 0, inputs static | All speeds | | 10 | mA |
| $I_{SB3}$ | Automatic CE Power-Down Current—CMOS Inputs | Max. $V_{DD}$, Device Deselected, $V_{IN} \geq V_{DDQ}$ – 0.3V or $V_{IN} \leq$ 0.3V, f = $f_{MAX}$, inputs switching | 8.5-ns cycle, 117 MHz | | 95 | mA |
| | | | 10-ns cycle, 100 MHz | | 85 | mA |
| $I_{SB4}$ | Automatic CE Power-Down Current—TTL Inputs | Max. $V_{DD}$, Device Deselected, $V_{IN} \geq V_{DD}$ – 0.3V or $V_{IN} \leq$ 0.3V, f = 0, inputs static | All speeds | | 30 | mA |

## Capacitance[8]

| Parameter | Description | Test Conditions | Max. | Unit |
|---|---|---|---|---|
| $C_{IN}$ | Input Capacitance | $T_A$ = 25°C, f = 1 MHz, $V_{DD}$ = 5.0V | 4 | pF |
| $C_{I/O}$ | I/O Capacitance | | 4 | pF |

## AC Test Loads and Waveforms

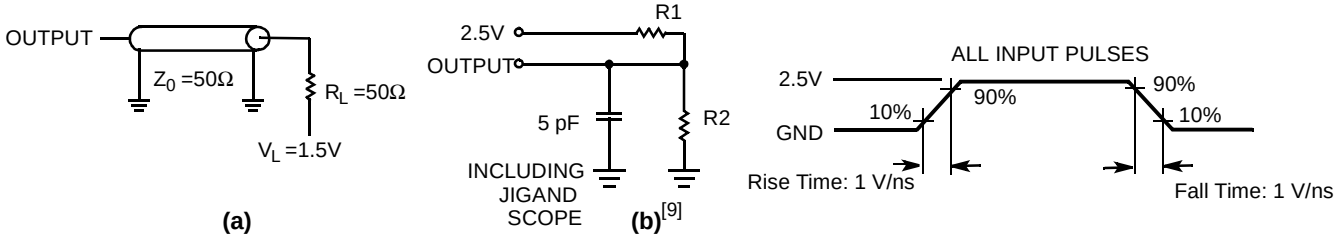


**Notes:**

7. Not more than one output should be shorted at one time. Duration of the short circuit should not exceed 30 seconds.
8. Tested initially and after any design or process changes that may affect these parameters.
9. R1=1667Ω and R2=1538Ω for $I_{OH}/I_{OL}$=–4/8 mA, R1=521Ω and R2=481Ω for $I_{OH}/I_{OL}$=–2/2 mA.

## Switching Characteristics Over the Operating Range[10]

| Parameter | Description | -117 | | -100 | | Unit |
|---|---|---|---|---|---|---|
| | | Min. | Max. | Min. | Max. | |
| $t_{CYC}$ | Clock Cycle Time | 8.5 | | 10 | | ns |
| $t_{CH}$ | Clock HIGH | 3.0 | | 4.0 | | ns |
| $t_{CL}$ | Clock LOW | 3.0 | | 4.0 | | ns |
| $t_{AS}$ | Address Set-Up Before CLK Rise | 2.0 | | 2.0 | | ns |
| $t_{AH}$ | Address Hold After CLK Rise | 0.5 | | 0.5 | | ns |
| $t_{CDV}$ | Data Output Valid After CLK Rise | | 7.5 | | 8.0 | ns |
| $t_{DOH}$ | Data Output Hold After CLK Rise | 2.0 | | 2.0 | | ns |
| $t_{ADS}$ | $\overline{ADSP}$, $\overline{ADSC}$ Set-Up Before CLK Rise | 2.0 | | 2.0 | | ns |
| $t_{ADH}$ | $\overline{ADSP}$, $\overline{ADSC}$ Hold After CLK Rise | 0.5 | | 0.5 | | ns |
| $t_{WES}$ | $\overline{BWS}_{[1:0]}$, $\overline{GW}$, $\overline{BWE}$ Set-Up Before CLK Rise | 2.0 | | 2.0 | | ns |
| $t_{WEH}$ | $\overline{BWS}_{[1:0]}$, $\overline{GW}$, $\overline{BWE}$ Hold After CLK Rise | 0.5 | | 0.5 | | ns |
| $t_{ADVS}$ | $\overline{ADV}$ Set-Up Before CLK Rise | 2.0 | | 2.0 | | ns |
| $t_{ADVH}$ | $\overline{ADV}$ Hold After CLK Rise | 0.5 | | 0.5 | | ns |
| $t_{DS}$ | Data Input Set-Up Before CLK Rise | 2.0 | | 2.0 | | ns |
| $t_{DH}$ | Data Input Hold After CLK Rise | 0.5 | | 0.5 | | ns |
| $t_{CES}$ | Chip Enable Set-Up | 2.0 | | 2.0 | | ns |
| $t_{CEH}$ | Chip Enable Hold After CLK Rise | 0.5 | | 0.5 | | ns |
| $t_{CHZ}$ | Clock to High-Z[11, 12] | | 3.5 | | 3.5 | ns |
| $t_{CLZ}$ | Clock to Low-Z[11, 12] | 0 | | 0 | | ns |
| $t_{EOHZ}$ | $\overline{OE}$ HIGH to Output High-Z[11, 13] | | 3.5 | | 3.5 | ns |
| $t_{EOLZ}$ | $\overline{OE}$ LOW to Output Low-Z[11, 13] | 0 | | 0 | | ns |
| $t_{EOV}$ | $\overline{OE}$ LOW to Output Valid | | 3.5 | | 3.5 | ns |

**Notes:**

10. Unless otherwise noted, test conditions assume signal transition time of 2.5 ns or less, timing reference levels of 1.25V, input pulse levels of 0 to 2.5V, and output loading of the specified $I_{OL}/I_{OH}$ and load capacitance. Shown in (a) and (b) of AC Test Loads.
11. $t_{CHZ}$, $t_{CLZ}$, $t_{EOHZ}$, and $t_{EOLZ}$ are specified with a load capacitance of 5 pF as in part (b) of AC Test Loads. Transition is measured ± 200 mV from steady-state voltage.
12. At any given voltage and temperature, $t_{CHZ}$ (max.) is less than $t_{CLZ}$ (min.).
13. This parameter is sampled and not 100% tested.

## Timing Diagrams

### Write Cycle Timing [14, 15]

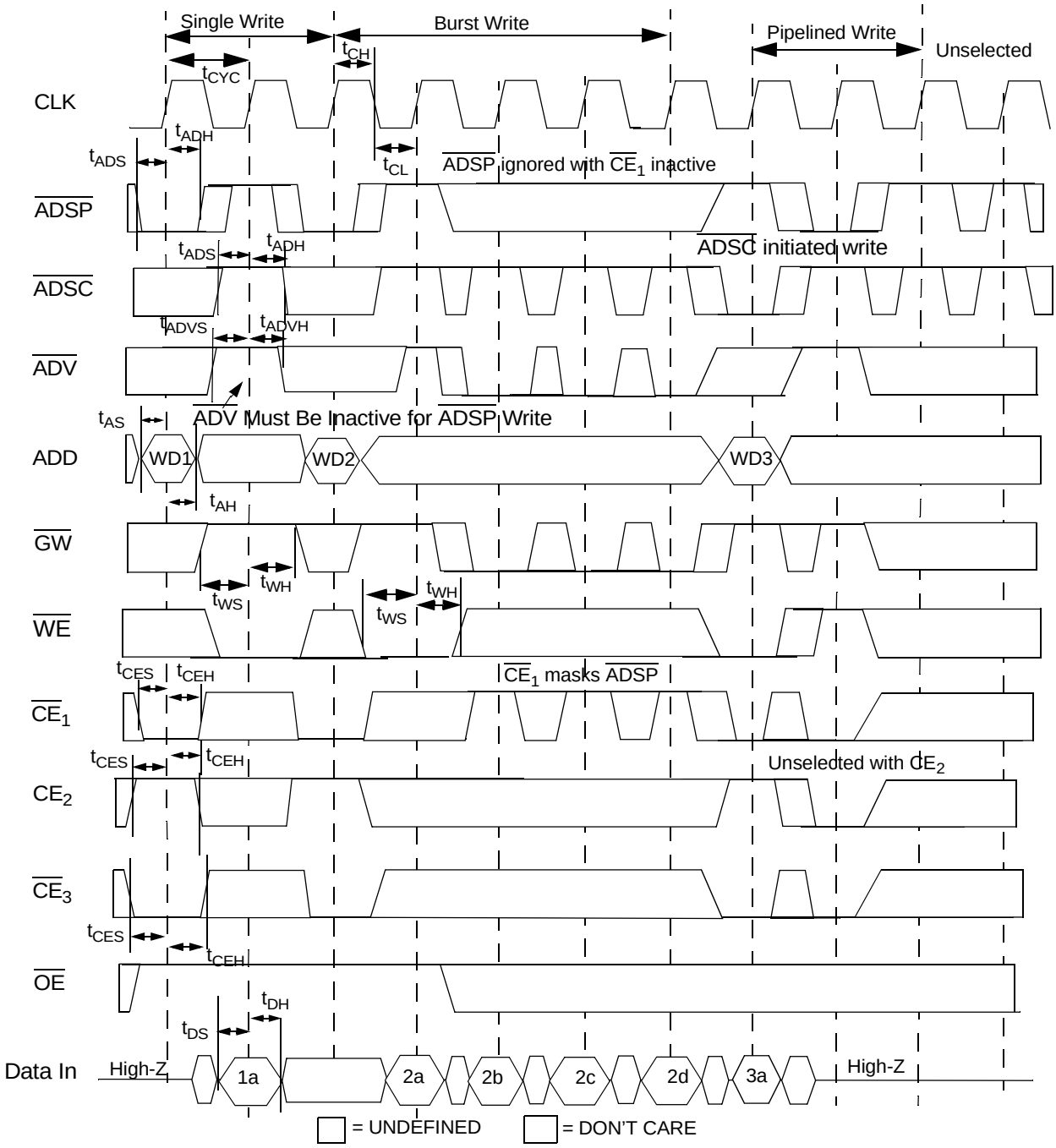


**Notes:**

14. $\overline{WE}$ is the combination of $\overline{BWE}$, $\overline{BW}_{[3:0]}$, and $\overline{GW}$ to define a write cycle (see Write Cycle Descriptions table).
15. WDx stands for Write Data to Address X.

## Timing Diagrams (continued)

**Read Cycle Timing**[14, 16]

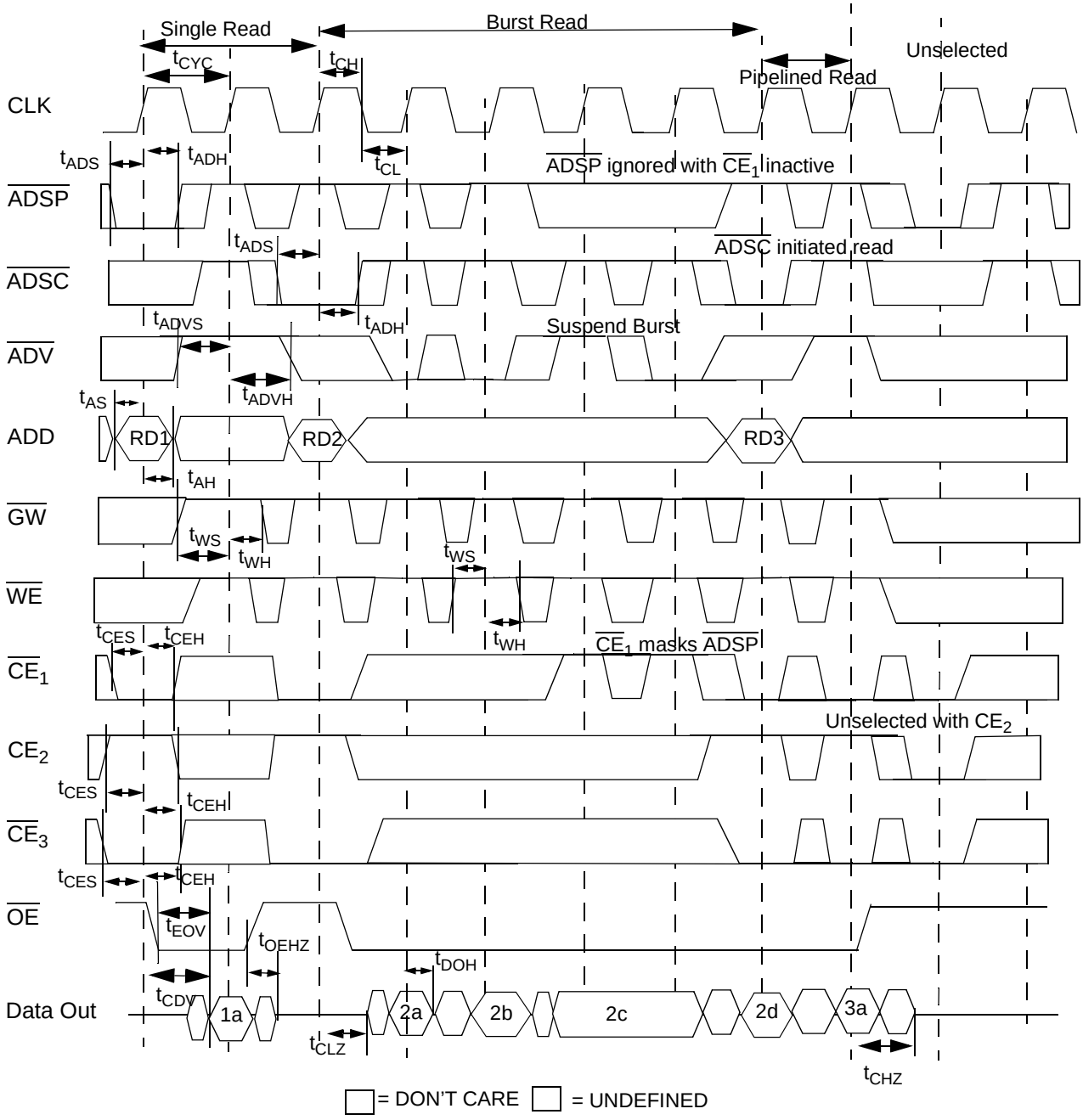


**Note:**
16. RDx stands for Read Data from Address X.

## Timing Diagrams (continued)

### Read/Write Cycle Timing

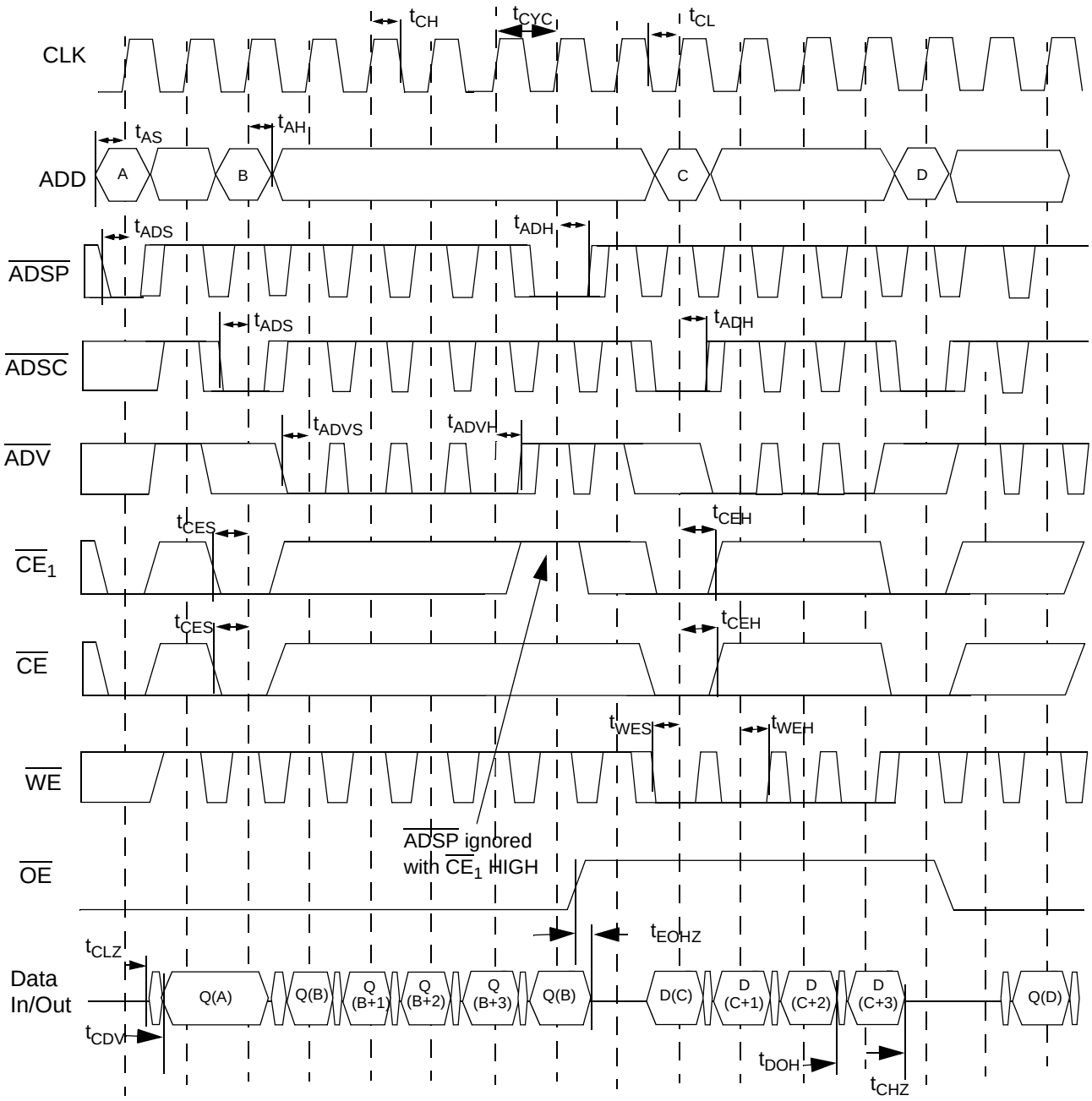


$\overline{WE}$ is the combination of $\overline{BWE}$, $\overline{BWS}_{[1:0]}$, and $\overline{GW}$ to define a write cycle (see Write Cycle Descriptions table)
$\overline{CE}$ is the combination of $CE_2$ and $\overline{CE}_3$. All chip selects need to be active in order to select the device. RAx stands for Read Address X, WAx stands for Write Address X, Dx stands for Data-in X, Qx stands for Data-out X.

## Timing Diagrams (continued)

### Pipeline Timing

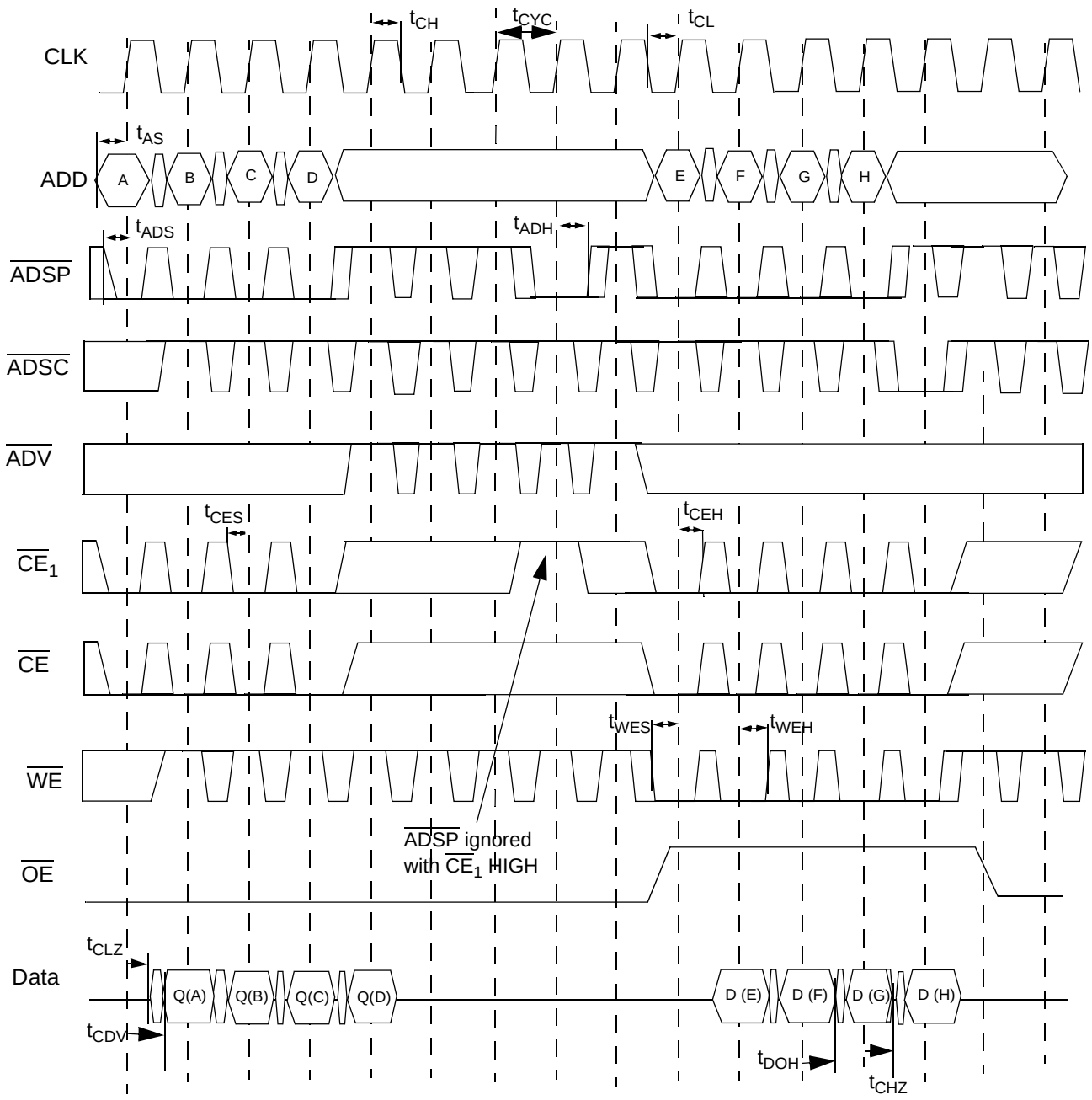


$\overline{CE}$ is the combination of $CE_2$ and $\overline{CE}_3$. All chip selects need to be active in order to select the device. RAx stands for Read Address X, WAx stands for Write Address X, Dx stands for Data-in X, Qx stands for Data-out X.

= DON'T CARE = UNDEFINED

## Timing Diagrams (continued)

### OE Switching Waveforms

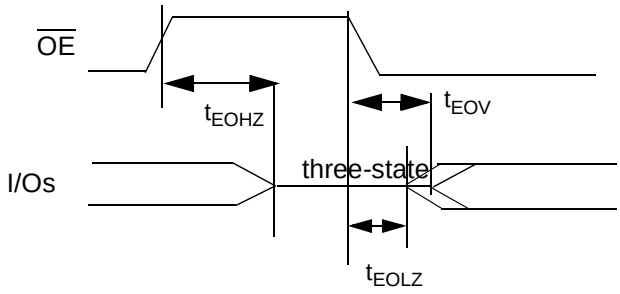

## Timing Diagrams (continued)

**ZZ Mode Timing** [17, 18]

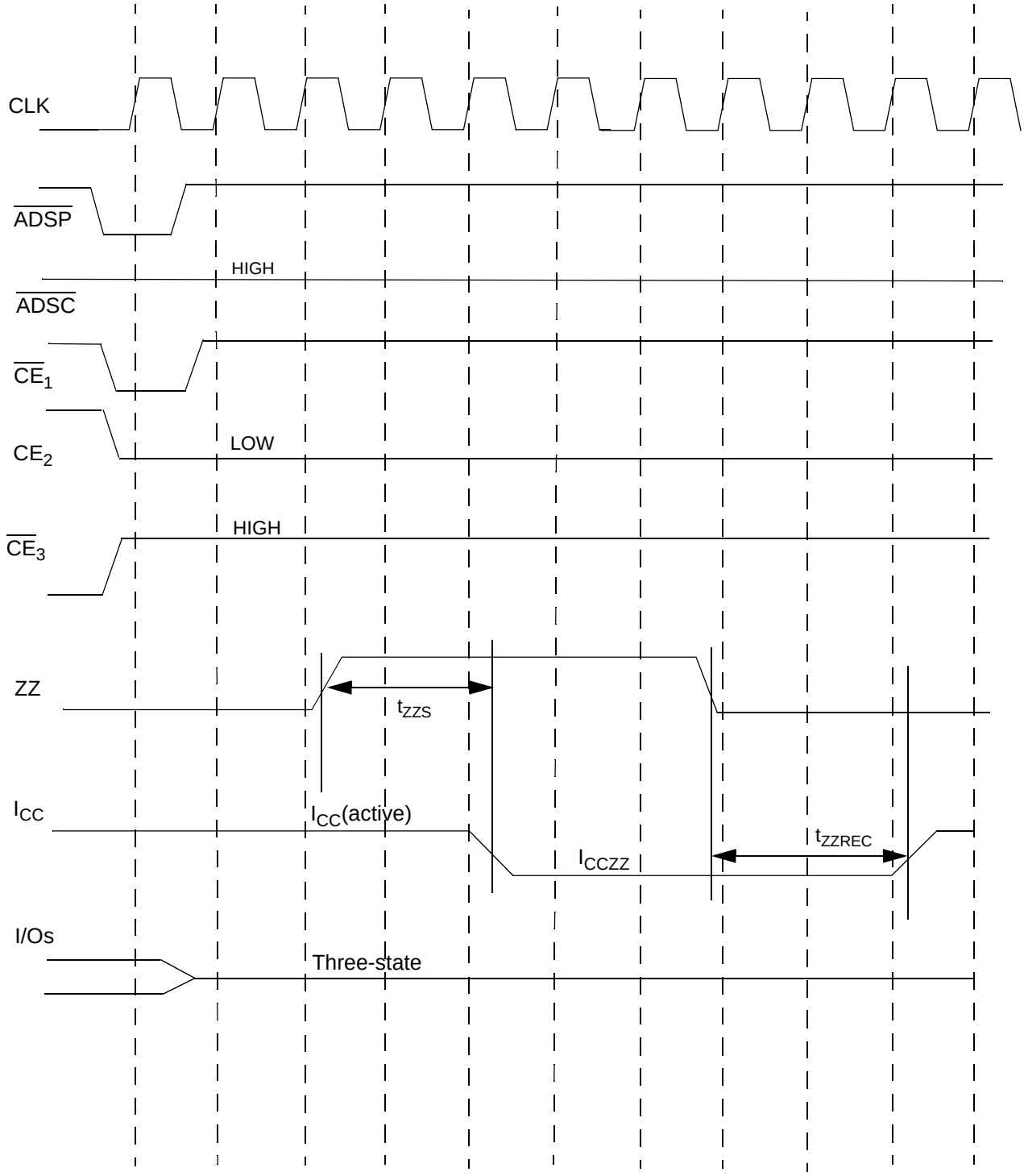


**Notes:**

17. Device must be deselected when entering ZZ mode. See Cycle Description Table for all possible signal conditions to deselect the device.
18. I/Os are in three-state when exiting ZZ sleep mode.

## Ordering Information

| Speed (MHz) | Ordering Code | Package Name | Package Type | Operating Range |
|---|---|---|---|---|
| 117 | WCSS0418V1F-117 | A101 | 100-Lead Thin Quad Flat Pack | Commercial |
| 100 | WCSS0418V1F-100AC | A101 | 100-Lead Thin Quad Flat Pack | |
| | WCSS0418V1F-100BGC | BG119 | 119-Ball BGA | |
| | WCSS0418V1F-100AI | A101 | 100-Lead Thin Quad Flat Pack | Industrial |
| | WCSS0418V1F-100BGI | BG119 | 119-Ball BGA | |

## Package Diagrams

**100-Pin Thin Plastic Quad Flatpack (14 x 20 x 1.4 mm) A101**

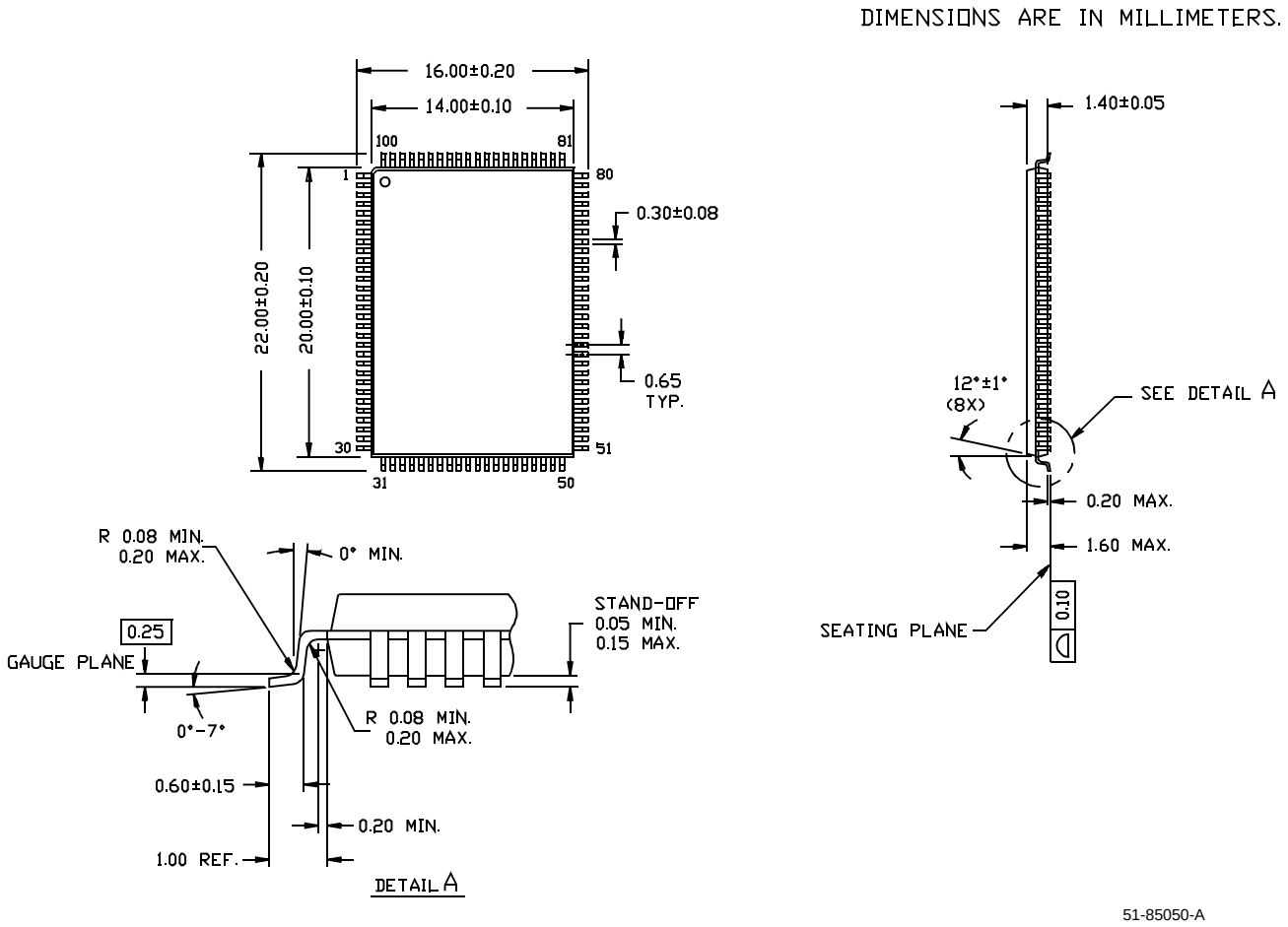

**Package Diagrams** (continued)

**119-Lead FBGA (14 x 22 x 2.4 mm) BG119**

DIMENSION IN MILLIMETERS (INCHES)

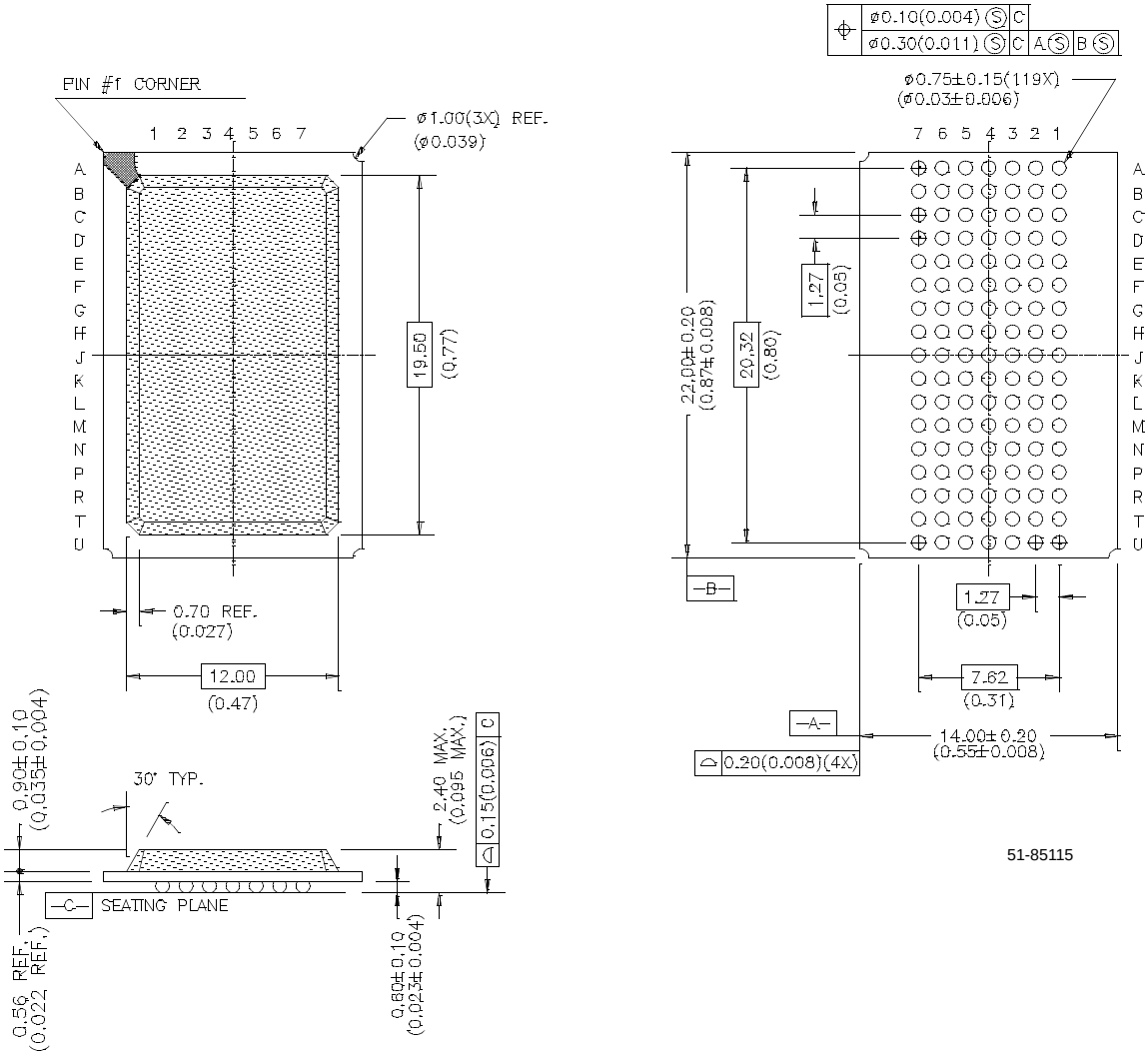

| Document Title: WCSS0418V1F 25Document #: 38-05245 Rev. **6K x 18 Synchronous 3.3V Cache RAM<br>Document Number: 38-05245 | | | | |
|---|---|---|---|---|
| **REV.** | **ECN NO.** | **Issue Date** | **Orig. of Change** | **Description of Change** |
| ** | 109890 | 09/22/01 | SZV | Change from Spec number: 38-05146 to 38-05245 |

Мы молодая и активно развивающаяся компания в области поставок электронных компонентов. Мы поставляем электронные компоненты отечественного и импортного производства напрямую от производителей и с крупнейших складов мира.

Благодаря сотрудничеству с мировыми поставщиками мы осуществляем комплексные и плановые поставки широчайшего спектра электронных компонентов.

Собственная эффективная логистика и склад в обеспечивает надежную поставку продукции в точно указанные сроки по всей России.

Мы осуществляем техническую поддержку нашим клиентам и предпродажную проверку качества продукции. На все поставляемые продукты мы предоставляем гарантию .

Осуществляем поставки продукции под контролем ВП МО РФ на предприятия военно-промышленного комплекса России , а также работаем в рамках 275 ФЗ с открытием отдельных счетов в уполномоченном банке. Система менеджмента качества компании соответствует требованиям ГОСТ ISO 9001.

Минимальные сроки поставки, гибкие цены, неограниченный ассортимент и индивидуальный подход к клиентам являются основой для выстраивания долгосрочного и эффективного сотрудничества с предприятиями радиоэлектронной промышленности, предприятиями ВПК и научно-исследовательскими институтами России.

С нами вы становитесь еще успешнее!

**Наши контакты:**

**Телефон:** +7 812 627 14 35

**Электронная почта:** sales@st-electron.ru

**Адрес:** 198099, Санкт-Петербург, Промышленная ул, дом № 19, литера Н, помещение 100-Н Офис 331