# Intel386™ DX MICROPROCESSOR
# 32-BIT CHMOS MICROPROCESSOR
# WITH INTEGRATED MEMORY MANAGEMENT

- **Flexible 32-Bit Microprocessor**
  - **— 8, 16, 32-Bit Data Types**
  - **— 8 General Purpose 32-Bit Registers**
- **Very Large Address Space**
  - **— 4 Gigabyte Physical**
  - **— 64 Terabyte Virtual**
  - **— 4 Gigabyte Maximum Segment Size**
- **Integrated Memory Management Unit**
  - **— Virtual Memory Support**
  - **— Optional On-Chip Paging**
  - **— 4 Levels of Protection**
  - **— Fully Compatible with 80286**
- **Object Code Compatible with All 8086 Family Microprocessors**
- **Virtual 8086 Mode Allows Running of 8086 Software in a Protected and Paged System**
- **Hardware Debugging Support**
- **Optimized for System Performance**
  - **— Pipelined Instruction Execution**
  - **— On-Chip Address Translation Caches**
  - **— 20, 25 and 33 MHz Clock**
  - **— 40, 50 and 66 Megabytes/Sec Bus Bandwidth**
- **Numerics Support via Intel387™ DX Math Coprocessor**
- **Complete System Development Support**
  - **— Software: C, PL/M, Assembler System Generation Tools**
  - **— Debuggers: PSCOPE, ICE™-386**
- **High Speed CHMOS IV Technology**
- **132 Pin Grid Array Package**
- **132 Pin Plastic Quad Flat Package**

  (See Packaging Specification, Order #231369)

The Intel386 DX Microprocessor is an entry-level 32-bit microprocessor designed for single-user applications and operating systems such as MS-DOS and Windows. The 32-bit registers and data paths support 32-bit addresses and data types. The processor addresses up to four gigabytes of physical memory and 64 terabytes (2**46) of virtual memory. The integrated memory management and protection architecture includes address translation registers, multitasking hardware and a protection mechanism to support operating systems. Instruction pipelining, on-chip address translation, ensure short average instruction execution times and maximum system throughput.

The Intel386 DX CPU offers new testability and debugging features. Testability features include a self-test and direct access to the page translation cache. Four new breakpoint registers provide breakpoint traps on code execution or data accesses, for powerful debugging of even ROM-based systems.

Object-code compatibility with all 8086 family members (8086, 8088, 80186, 80188, 80286) means the Intel386 DX offers immediate access to the world's largest microprocessor software base.

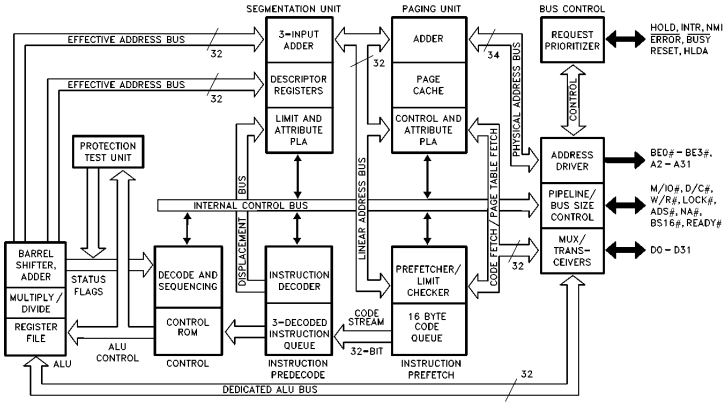


231630–49

**Intel386™ DX Pipelined 32-Bit Microarchitecture**

Intel386™ DX and Intel387™ DX are Trademarks of Intel Corporation.
MS-DOS and Windows are Trademarks of MICROSOFT Corporation.

*Other brands and names are the property of their respective owners.
Information in this document is provided in connection with Intel products. Intel assumes no liability whatsoever, including infringement of any patent or copyright, for sale and use of Intel products except as provided in Intel's Terms and Conditions of Sale for such products. Intel retains the right to make changes to these specifications at any time, without notice. Microcomputer Products may have minor variations to this specification known as errata.
COPYRIGHT © INTEL CORPORATION, 1995
**December 1995** **Order Number: 231630-011**

# Intel386™ DX MICROPROCESSOR
# 32-BIT CHMOS MICROPROCESSOR
# WITH INTEGRATED MEMORY MANAGEMENT

## CONTENTS

PAGE


**1. PIN ASSIGNMENT** . . . . . 5
1.1 Pin Description Table . . . . . 6

**2. BASE ARCHITECTURE** . . . . . 8
2.1 Introduction . . . . . 8
2.2 Register Overview . . . . . 8
2.3 Register Descriptions . . . . . 9
2.4 Instruction Set . . . . . 15
2.5 Addressing Modes . . . . . 18
2.6 Data Types . . . . . 20
2.7 Memory Organization . . . . . 22
2.8 I/O Space . . . . . 23
2.9 Interrupts . . . . . 24
2.10 Reset and Initialization . . . . . 27
2.11 Testability . . . . . 28
2.12 Debugging Support . . . . . 28

**3. REAL MODE ARCHITECTURE** . . . . . 32
3.1 Real Mode Introduction . . . . . 32
3.2 Memory Addressing . . . . . 33
3.3 Reserved Locations . . . . . 34
3.4 Interrupts . . . . . 34
3.5 Shutdown and Halt . . . . . 34

**4. PROTECTED MODE ARCHITECTURE** . . . . . 34
4.1 Introduction . . . . . 34
4.2 Addressing Mechanism . . . . . 35
4.3 Segmentation . . . . . 36
4.4 Protection . . . . . 46
4.5 Paging . . . . . 52
4.6 Virtual 8086 Environment . . . . . 56

**5. FUNCTIONAL DATA** . . . . . 61
5.1 Introduction . . . . . 61
5.2 Signal Description . . . . . 61
5.2.1 Introduction . . . . . 61
5.2.2 Clock (CLK2) . . . . . 62
5.2.3 Data Bus (D0 through D31) . . . . . 62
5.2.4 Address Bus (BEO# through BE3#, A2 through A31) . . . . . 62
5.2.5 Bus Cycle Definition Signals (W/R#, D/C#, M/IO, LOCK#) . . . . . 63
5.2.6 Bus Control Signals (ADS#, READY#, NA#, BS16#) . . . . . 64
5.2.7 Bus Arbitration Signals (HOLD, HLDA) . . . . . 65
5.2.8 Coprocessor Interface Signals (PEREQ, BUSY#, ERROR#) . . . . . 65
5.2.9 Interrupt Signals (INTR, NMI, RESET) . . . . . 66
5.2.10 Signal Summary . . . . . 67

## CONTENTS

PAGE

**5. FUNCTIONAL DATA** (Continued)
5.3. Bus Transfer Mechanism . . . . . 67
5.3.1 Introduction . . . . . 67
5.3.2 Memory and I/O Spaces . . . . . 68
5.3.3 Memory and I/O Organization . . . . . 69
5.3.4 Dynamic Data Bus Sizing . . . . . 69
5.3.5 Interfacing with 32- and 16-bit Memories . . . . . 70
5.3.6 Operand Alignment . . . . . 71
5.4 Bus Functional Description . . . . . 71
5.4.1 Introduction . . . . . 71
5.4.2 Address Pipelining . . . . . 74
5.4.3 Read and Write Cycles . . . . . 76
5.4.4 Interrupt Acknowledge (INTA) Cycles . . . . . 87
5.4.5 Halt Indication Cycle . . . . . 88
5.4.6 Shutdown Indication Cycle . . . . . 89
5.5 Other Functional Descriptions . . . . . 90
5.5.1 Entering and Exiting Hold Acknowledge . . . . . 90
5.5.2 Reset during Hold Acknowledge . . . . . 90
5.5.3 Bus Activity During and Following Reset . . . . . 90
5.6 Self-test Signature . . . . . 92
5.7 Component and Revision Identifiers . . . . . 92
5.8 Coprocessor Interface . . . . . 94
5.8.1 Software Testing for Coprocessor Presence . . . . . 94

**6. INSTRUCTION SET** . . . . . 95
6.1 Instruction Encoding and Clock Count Summary . . . . . 95
6.2 Instruction Encoding Details . . . . . 110

**7. DESIGNING FOR ICE™-386 DX EMULATOR USE** . . . . . 117

**8. MECHANICAL DATA** . . . . . 119
8.1 Introduction . . . . . 119
8.2 Package Dimensions and Mounting . . . . . 119
8.3 Package Thermal Specification . . . . . 122

**9. ELECTRICAL DATA** . . . . . 123
9.1 Introduction . . . . . 123
9.2 Power and Grounding . . . . . 123
9.3 Maximum Ratings . . . . . 124
9.4 D.C. Specifications . . . . . 124
9.5 A.C. Specifications . . . . . 125

**10. REVISION HISTORY** . . . . . 137

**NOTE:**
This is revision 011; This supercedes all previous revisions.

## 1. PIN ASSIGNMENT

The Intel386 DX pinout as viewed from the top side of the component is shown by Figure 1-1. Its pinout as viewed from the Pin side of the component is Figure 1-2.

$V_{CC}$ and GND connections must be made to multiple $V_{CC}$ and $V_{SS}$ (GND) pins. Each $V_{CC}$ and $V_{SS}$ must be connected to the appropriate voltage level. The circuit board should include $V_{CC}$ and GND planes for power distribution and all $V_{CC}$ and $V_{SS}$ pins must be connected to the appropriate plane.

**NOTE:**
Pins identified as ''N.C.'' should remain completely unconnected.

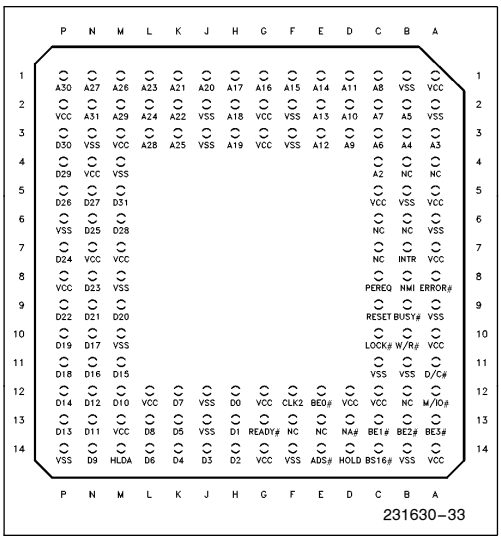


**Figure 1-1. Intel386™ DX PGA Pinout—View from Top Side**

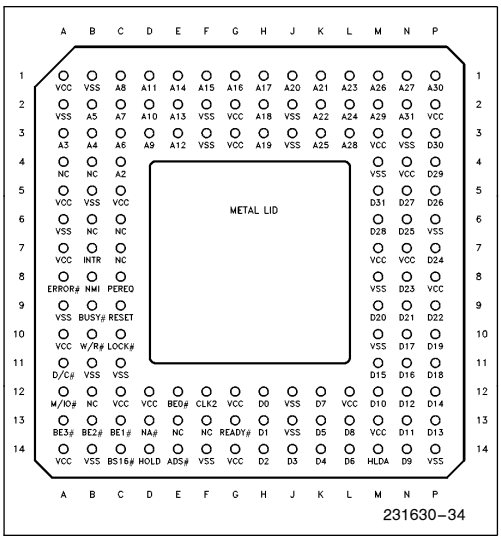


**Figure 1-2. Intel386™ DX PGA Pinout—View from Pin Side**

**Table 1-1. Intel386™ DX PGA Pinout—Functional Grouping**

| Signal/Pin | | Signal/Pin | | Signal/Pin | | Signal/Pin | | Signal/Pin | | Signal/Pin | |
|---|---|---|---|---|---|---|---|---|---|---|---|
| A2 | C4 | A24 | L2 | D6 | L14 | D28 | M6 | $V_{CC}$ | C12 | $V_{SS}$ | F2 |
| A3 | A3 | A25 | K3 | D7 | K12 | D29 | P4 | | D12 | | F3 |
| A4 | B3 | A26 | M1 | D8 | L13 | D30 | P3 | | G2 | | F14 |
| A5 | B2 | A27 | N1 | D9 | N14 | D31 | M5 | | G3 | | J2 |
| A6 | C3 | A28 | L3 | D10 | M12 | D/C# | A11 | | G12 | | J3 |
| A7 | C2 | A29 | M2 | D11 | N13 | ERROR# | A8 | | G14 | | J12 |
| A8 | C1 | A30 | P1 | D12 | N12 | HLDA | M14 | | L12 | | J13 |
| A9 | D3 | A31 | N2 | D13 | P13 | HOLD | D14 | | M3 | | M4 |
| A10 | D2 | ADS# | E14 | D14 | P12 | INTR | B7 | | M7 | | M8 |
| A11 | D1 | BE0# | E12 | D15 | M11 | LOCK# | C10 | | M13 | | M10 |
| A12 | E3 | BE1# | C13 | D16 | N11 | M/IO# | A12 | | N4 | | N3 |
| A13 | E2 | BE2# | B13 | D17 | N10 | NA# | D13 | | N7 | | P6 |
| A14 | E1 | BE3# | A13 | D18 | P11 | NMI | B8 | | P2 | | P14 |
| A15 | F1 | BS16# | C14 | D19 | P10 | PEREQ | C8 | | P8 | W/R# | B10 |
| A16 | G1 | BUSY# | B9 | D20 | M9 | READY# | G13 | $V_{SS}$ | A2 | N.C. | A4 |
| A17 | H1 | CLK2 | F12 | D21 | N9 | RESET | C9 | | A6 | | B4 |
| A18 | H2 | D0 | H12 | D22 | P9 | $V_{CC}$ | A1 | | A9 | | B6 |
| A19 | H3 | D1 | H13 | D23 | N8 | | A5 | | B1 | | B12 |
| A20 | J1 | D2 | H14 | D24 | P7 | | A7 | | B5 | | C6 |
| A21 | K1 | D3 | J14 | D25 | N6 | | A10 | | B11 | | C7 |
| A22 | K2 | D4 | K14 | D26 | P5 | | A14 | | B14 | | E13 |
| A23 | L1 | D5 | K13 | D27 | N5 | | C5 | | C11 | | F13 |

## 1.1 PIN DESCRIPTION TABLE

The following table lists a brief description of each pin on the Intel386 DX. The following definitions are used in these descriptions:

# The named signal is active LOW.
I Input signal.
O Output signal.
I/O Input and Output signal.
— No electrical connection.

For a more complete description refer to Section 5.2 Signal Description.

| Symbol | Type | Name and Function |
|---|---|---|
| CLK2 | I | **CLK2** provides the fundamental timing for the Intel386 DX. |
| $D_{31}-D_0$ | I/O | **DATA BUS** inputs data during memory, I/O and interrupt acknowledge read cycles and outputs data during memory and I/O write cycles. |
| $A_{31}-A_2$ | O | **ADDRESS BUS** outputs physical memory or port I/O addresses. |
| BE0#–BE3# | O | **BYTE ENABLES** indicate which data bytes of the data bus take part in a bus cycle. |
| W/R# | O | **WRITE/READ** is a bus cycle definition pin that distinguishes write cycles from read cycles. |
| D/C# | O | **DATA/CONTROL** is a bus cycle definition pin that distinguishes data cycles, either memory or I/O, from control cycles which are: interrupt acknowledge, halt, and instruction fetching. |
| M/IO# | O | **MEMORY I/O** is a bus cycle definition pin that distinguishes memory cycles from input/output cycles. |
| LOCK# | O | **BUS LOCK** is a bus cycle definition pin that indicates that other system bus masters are denied access to the system bus while it is active. |
| ADS# | O | **ADDRESS STATUS** indicates that a valid bus cycle definition and address (W/R#, D/C#, M/IO#, BE0#, BE1#, BE2#, BE3# and $A_{31}-A_2$) are being driven at the Intel386 DX pins. |
| NA# | I | **NEXT ADDRESS** is used to request address pipelining. |
| READY# | I | **BUS READY** terminates the bus cycle. |
| BS16# | I | **BUS SIZE 16** input allows direct connection of 32-bit and 16-bit data buses. |
| HOLD | I | **BUS HOLD REQUEST** input allows another bus master to request control of the local bus. |

## 1.1 PIN DESCRIPTION TABLE (Continued)

| Symbol | Type | Name and Function |
|---|---|---|
| HLDA | O | **BUS HOLD ACKNOWLEDGE** output indicates that the Intel386 DX has surrendered control of its local bus to another bus master. |
| BUSY# | I | **BUSY** signals a busy condition from a processor extension. |
| ERROR# | I | **ERROR** signals an error condition from a processor extension. |
| PEREQ | I | **PROCESSOR EXTENSION REQUEST** indicates that the processor extension has data to be transferred by the Intel386 DX. |
| INTR | I | **INTERRUPT REQUEST** is a maskable input that signals the Intel386 DX to suspend execution of the current program and execute an interrupt acknowledge function. |
| NMI | I | **NON-MASKABLE INTERRUPT REQUEST** is a non-maskable input that signals the Intel386 DX to suspend execution of the current program and execute an interrupt acknowledge function. |
| RESET | I | **RESET** suspends any operation in progress and places the Intel386 DX in a known reset state. See **Interrupt Signals** for additional information. |
| N/C | — | **NO CONNECT** should always remain unconnected. Connection of a N/C pin may cause the processor to malfunction or be incompatible with future steppings of the Intel386 DX. |
| $V_{CC}$ | I | **SYSTEM POWER** provides the +5V nominal D.C. supply input. |
| $V_{SS}$ | I | **SYSTEM GROUND** provides 0V connection from which all inputs and outputs are measured. |

# 2. BASE ARCHITECTURE

## 2.1 INTRODUCTION

The Intel386 DX consists of a central processing unit, a memory management unit and a bus interface.

The central processing unit consists of the execution unit and instruction unit. The execution unit contains the eight 32-bit general purpose registers which are used for both address calculation, data operations and a 64-bit barrel shifter used to speed shift, rotate, multiply, and divide operations. The multiply and divide logic uses a 1-bit per cycle algorithm. The multiply algorithm stops the iteration when the most significant bits of the multiplier are all zero. This allows typical 32-bit multiplies to be executed in under one microsecond. The instruction unit decodes the instruction opcodes and stores them in the decoded instruction queue for immediate use by the execution unit.

The memory management unit (MMU) consists of a segmentation unit and a paging unit. Segmentation allows the managing of the logical address space by providing an extra addressing component, one that allows easy code and data relocatability, and efficient sharing. The paging mechanism operates beneath and is transparent to the segmentation process, to allow management of the physical address space. Each segment is divided into one or more 4K byte pages. To implement a virtual memory system, the Intel386 DX supports full restartability for all page and segment faults.

Memory is organized into one or more variable length segments, each up to four gigabytes in size. A given region of the linear address space, a segment, can have attributes associated with it. These attributes include its location, size, type (i.e. stack, code or data), and protection characteristics. Each task on an Intel386 DX can have a maximum of 16,381 segments of up to four gigabytes each, thus providing 64 terabytes (trillion bytes) of virtual memory to each task.

The segmentation unit provides four-levels of protection for isolating and protecting applications and the operating system from each other. The hardware enforced protection allows the design of systems with a high degree of integrity.

The Intel386 DX has two modes of operation: Real Address Mode (Real Mode), and Protected Virtual Address Mode (Protected Mode). In Real Mode the Intel386 DX operates as a very fast 8086, but with 32-bit extensions if desired. Real Mode is required primarily to setup the processor for Protected Mode operation. Protected Mode provides access to the sophisticated memory management, paging and privilege capabilities of the processor.

Within Protected Mode, software can perform a task switch to enter into tasks designated as Virtual 8086 Mode tasks. Each such task behaves with 8086 semantics, thus allowing 8086 software (an application program, or an entire operating system) to execute. The Virtual 8086 tasks can be isolated and protected from one another and the host Intel386 DX operating system, by the use of paging, and the I/O Permission Bitmap.

Finally, to facilitate high performance system hardware designs, the Intel386 DX bus interface offers address pipelining, dynamic data bus sizing, and direct Byte Enable signals for each byte of the data bus. These hardware features are described fully beginning in Section 5.

## 2.2 REGISTER OVERVIEW

The Intel386 DX has 32 register resources in the following categories:

- General Purpose Registers
- Segment Registers
- Instruction Pointer and Flags
- Control Registers
- System Address Registers
- Debug Registers
- Test Registers.

The registers are a superset of the 8086, 80186 and 80286 registers, so all 16-bit 8086, 80186 and 80286 registers are contained within the 32-bit Intel386 DX.

Figure 2-1 shows all of Intel386 DX base architecture registers, which include the general address and data registers, the instruction pointer, and the flags register. The contents of these registers are task-specific, so these registers are automatically loaded with a new context upon a task switch operation.

The base architecture also includes six directly accessible segments, each up to 4 Gbytes in size. The segments are indicated by the selector values placed in Intel386 DX segment registers of Figure 2-1. Various selector values can be loaded as a program executes, if desired.

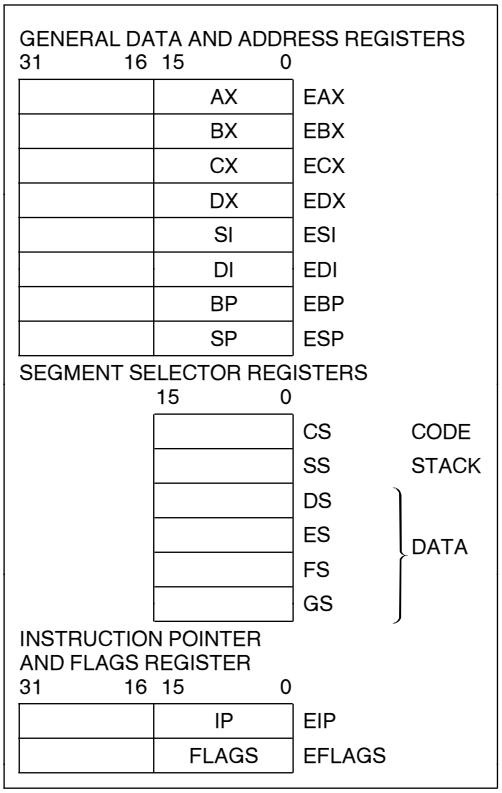


**Figure 2-1. Intel386™ DX Base Architecture Registers**

The selectors are also task-specific, so the segment registers are automatically loaded with new context upon a task switch operation.

The other types of registers, Control, System Address, Debug, and Test, are primarily used by system software.

## 2.3 REGISTER DESCRIPTIONS

### 2.3.1 General Purpose Registers

**General Purpose Registers:** The eight general purpose registers of 32 bits hold data or address quantities. The general registers, Figure 2-2, support data operands of 1, 8, 16, 32 and 64 bits, and bit fields of 1 to 32 bits. They support address operands of 16 and 32 bits. The 32-bit registers are named EAX, EBX, ECX, EDX, ESI, EDI, EBP, and ESP.

The least significant 16 bits of the registers can be accessed separately. This is done by using the 16-bit names of the registers AX, BX, CX, DX, SI, DI, BP, and SP. When accessed as a 16-bit operand, the upper 16 bits of the register are neither used nor changed.

Finally 8-bit operations can individually access the lowest byte (bits 0–7) and the higher byte (bits 8–15) of general purpose registers AX, BX, CX and DX. The lowest bytes are named AL, BL, CL and DL, respectively. The higher bytes are named AH, BH, CH and DH, respectively. The individual byte accessibility offers additional flexibility for data operations, but is not used for effective address calculation.

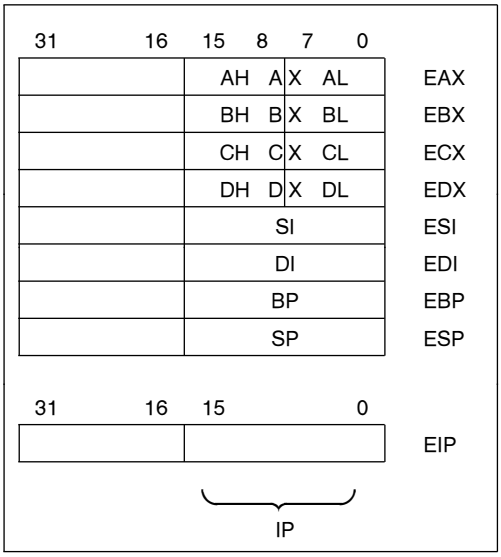


**Figure 2-2. General Registers and Instruction Pointer**

### 2.3.2 Instruction Pointer

The instruction pointer, Figure 2-2, is a 32-bit register named EIP. EIP holds the offset of the next instruction to be executed. The offset is always relative to the base of the code segment (CS). The lower 16 bits (bits 0–15) of EIP contain the 16-bit instruction pointer named IP, which is used by 16-bit addressing.

### 2.3.3 Flags Register

The Flags Register is a 32-bit register named EFLAGS. The defined bits and bit fields within EFLAGS, shown in Figure 2-3, control certain operations and indicate status of the Intel386 DX. The lower 16 bits (bit 0–15) of EFLAGS contain the 16-bit flag register named FLAGS, which is most useful when executing 8086 and 80286 code.

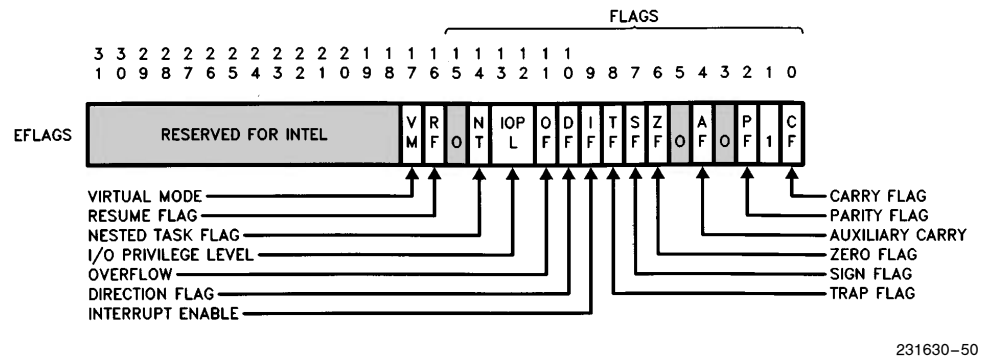


**NOTE:**
0 indicates Intel reserved: do not define; see section 2.3.10.

**Figure 2-3. Flags Register**

VM (Virtual 8086 Mode, bit 17)

The VM bit provides Virtual 8086 Mode within Protected Mode. If set while the Intel386 DX is in Protected Mode, the Intel386 DX will switch to Virtual 8086 operation, handling segment loads as the 8086 does, but generating exception 13 faults on privileged opcodes. The VM bit can be set only in Protected Mode, by the IRET instruction (if current privilege level = 0) and by task switches at any privilege level. The VM bit is unaffected by POPF. PUSHF always pushes a 0 in this bit, even if executing in virtual 8086 Mode. The EFLAGS image pushed during interrupt processing or saved during task switches will contain a 1 in this bit if the interrupted code was executing as a Virtual 8086 Task.

RF (Resume Flag, bit 16)

The RF flag is used in conjunction with the debug register breakpoints. It is checked at instruction boundaries before breakpoint processing. When RF is set, it causes any debug fault to be ignored on the next instruction. RF is then automatically reset at the successful completion of every instruction (no faults are signalled) except the IRET instruction, the POPF instruction, (and JMP, CALL, and INT instructions causing a task switch). These instructions set RF to the value specified by the memory image. For example, at the end of the breakpoint service routine, the IRET instruction can pop an EFLAG image having the RF bit set and resume the program's execution at the breakpoint address without generating another breakpoint fault on the same location.

NT (Nested Task, bit 14)

This flag applies to Protected Mode. NT is set to indicate that the execution of this task is nested within another task. If set, it indicates that the current nested task's Task State Segment (TSS) has a valid back link to the previous task's TSS. This bit is set or reset by control transfers to other tasks. The value of NT in EFLAGS is tested by the IRET instruction to determine whether to do an inter-task return or an intra-task return. A POPF or an IRET instruction **will** affect the setting of this bit according to the image popped, at any privilege level.

IOPL (Input/Output Privilege Level, bits 12-13)

This two-bit field applies to Protected Mode. IOPL indicates the numerically maximum CPL (current privilege level) value permitted to execute I/O instructions without generating an exception 13 fault or consulting the I/O Permission Bitmap. It also indicates the maximum CPL value allowing alteration of the IF (INTR Enable Flag) bit when new values are popped into the EFLAG register. POPF and IRET instruction can alter the IOPL field when executed at CPL = 0. Task switches can always alter the IOPL field, when the new flag image is loaded from the incoming task's TSS.

OF (Overflow Flag, bit 11)

OF is set if the operation resulted in a signed overflow. Signed overflow occurs when the operation resulted in carry/borrow **into** the sign bit (high-order bit) of the result but did not result in a carry/borrow **out of** the high-order bit, or vice-versa. For 8/16/32 bit operations, OF is set according to overflow at bit 7/15/31, respectively.

DF (Direction Flag, bit 10)

DF defines whether ESI and/or EDI registers postdecrement or postincrement during the string instructions. Postincrement occurs if DF is reset. Postdecrement occurs if DF is set.

IF (INTR Enable Flag, bit 9)

The IF flag, when set, allows recognition of external interrupts signalled on the INTR pin. When IF is reset, external interrupts signalled on the INTR are not recognized. IOPL indicates the maximum CPL value allowing alteration of the IF bit when new values are popped into EFLAGS or FLAGS.

TF (Trap Enable Flag, bit 8)

TF controls the generation of exception 1 trap when single-stepping through code. When TF is set, the Intel386 DX generates an exception 1 trap after the next instruction is executed. When TF is reset, exception 1 traps occur only as a function of the breakpoint addresses loaded into debug registers DR0–DR3.

SF (Sign Flag, bit 7)

SF is set if the high-order bit of the result is set, it is reset otherwise. For 8-, 16-, 32-bit operations, SF reflects the state of bit 7, 15, 31 respectively.

ZF (Zero Flag, bit 6)

ZF is set if all bits of the result are 0. Otherwise it is reset.

AF (Auxiliary Carry Flag, bit 4)

The Auxiliary Flag is used to simplify the addition and subtraction of packed BCD quantities. AF is set if the operation resulted in a carry out of bit 3 (addition) or a borrow into bit 3 (subtraction). Otherwise AF is reset. AF is affected by carry out of, or borrow into bit 3 only, regardless of overall operand length: 8, 16 or 32 bits.

PF (Parity Flags, bit 2)

PF is set if the low-order eight bits of the operation contains an even number of ‘‘1’s’’ (even parity). PF is reset if the low-order eight bits have odd parity. PF is a function of only the low-order eight bits, regardless of operand size.

CF (Carry Flag, bit 0)

CF is set if the operation resulted in a carry out of (addition), or a borrow into (subtraction) the high-order bit. Otherwise CF is reset. For 8-, 16- or 32-bit operations, CF is set according to carry/borrow at bit 7, 15 or 31, respectively.

Note in these descriptions, ‘‘set’’ means ‘‘set to 1,’’ and ‘‘reset’’ means ‘‘reset to 0.’’

### 2.3.4 Segment Registers

Six 16-bit segment registers hold segment selector values identifying the currently addressable memory segments. Segment registers are shown in Figure 2-4. In Protected Mode, each segment may range in size from one byte up to the entire linear and physi-

| SEGMENT REGISTERS (15 … 0) | | DESCRIPTOR REGISTERS (LOADED AUTOMATICALLY): Physical Base Address | Segment Limit | Other Segment Attributes from Descriptor | | | | | | | | |
|---|---|---|---|---|---|---|---|---|---|---|---|---|
| Selector | CS– | | | | | | | | | | — | |
| Selector | SS– | | | | | | | | | — | | — |
| Selector | DS– | | | | | | | | | — | — | — |
| Selector | ES– | | | | | | | | | — | — | — |
| Selector | FS– | | | | | | | | | — | — | — |
| Selector | GS– | | | | | | | | | — | — | — |

**Figure 2-4. Intel386™ DX Segment Registers, and Associated Descriptor Registers**

cal space of the machine, 4 Gbytes ($2^{32}$ bytes). If a maximum sized segment is used (limit = FFFFFFFFH) it should be Dword aligned (i.e., the least two significant bits of the segment base should be zero). This will avoid a segment limit violation (exception 13) caused by the wrap around. In Real Address Mode, the maximum segment size is fixed at 64 Kbytes ($2^{16}$ bytes).

The six segments addressable at any given moment are defined by the segment registers CS, SS, DS, ES, FS and GS. The selector in CS indicates the current code segment; the selector in SS indicates the current stack segment; the selectors in DS, ES, FS and GS indicate the current data segments.

### 2.3.5 Segment Descriptor Registers

The segment descriptor registers are not programmer visible, yet it is very useful to understand their content. Inside the Intel386 DX, a descriptor register (programmer invisible) is associated with each programmer-visible segment register, as shown by Figure 2-4. Each descriptor register holds a 32-bit segment base address, a 32-bit segment limit, and the other necessary segment attributes.

When a selector value is loaded into a segment register, the associated descriptor register is automatically updated with the correct information. In Real Address Mode, only the base address is updated directly (by shifting the selector value four bits to the left), since the segment maximum limit and attributes are fixed in Real Mode. In Protected Mode, the base address, the limit, and the attributes are all updated per the contents of the segment descriptor indexed by the selector.

Whenever a memory reference occurs, the segment descriptor register associated with the segment being used is automatically involved with the memory reference. The 32-bit segment base address becomes a component of the linear address calculation, the 32-bit limit is used for the limit-check operation, and the attributes are checked against the type of memory reference requested.

### 2.3.6 Control Registers

The Intel386 DX has three control registers of 32 bits, CR0, CR2 and CR3, to hold machine state of a global nature (not specific to an individual task). These registers, along with System Address Registers described in the next section, hold machine state that affects all tasks in the system. To access the Control Registers, load and store instructions are defined.

**CR0: Machine Control Register (includes 80286 Machine Status Word)**

CR0, shown in Figure 2-5, contains 6 defined bits for control and status purposes. The low-order 16 bits of CR0 are also known as the Machine Status Word, MSW, for compatibility with 80286 Protected Mode. LMSW and SMSW instructions are taken as special aliases of the load and store CR0 operations, where only the low-order 16 bits of CR0 are involved. For compatibility with 80286 operating systems the Intel386 DX LMSW instructions work in an identical fashion to the LMSW instruction on the 80286. (i.e. It only operates on the low-order 16-bits of CR0 and it ignores the new bits in CR0.) New Intel386 DX operating systems should use the MOV CR0, Reg instruction.

The defined CR0 bits are described below.

PG (Paging Enable, bit 31)

the PG bit is set to enable the on-chip paging unit. It is reset to disable the on-chip paging unit.

R (reserved, bit 4)

This bit is reserved by Intel. When loading CR0 care should be taken to not alter the value of this bit.

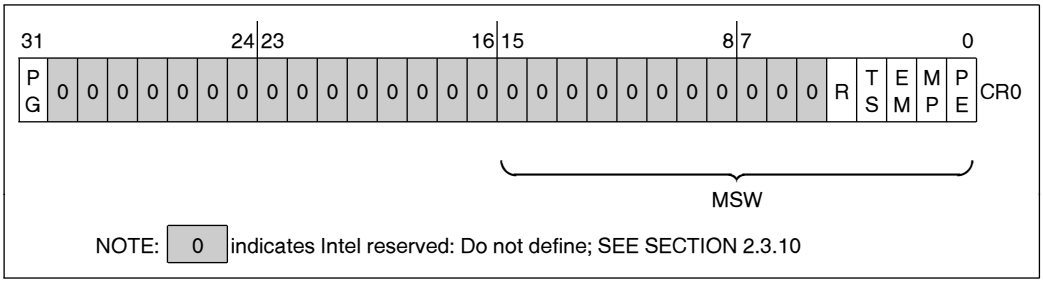


**Figure 2-5. Control Register 0**

TS (Task Switched, bit 3)

TS is automatically set whenever a task switch operation is performed. If TS is set, a coprocessor ESCape opcode will cause a Coprocessor Not Available trap (exception 7). The trap handler typically saves the Intel387 DX coprocessor context belonging to a previous task, loads the Intel387 DX coprocessor state belonging to the current task, and clears the TS bit before returning to the faulting coprocessor opcode.

EM (Emulate Coprocessor, bit 2)

The EMulate coprocessor bit is set to cause all coprocessor opcodes to generate a Coprocessor Not Available fault (exception 7). It is reset to allow coprocessor opcodes to be executed on an actual Intel387 DX coprocessor (this is the default case after reset). Note that the WAIT opcode is not affected by the EM bit setting.

MP (Monitor Coprocessor, bit 1)

The MP bit is used in conjunction with the TS bit to determine if the WAIT opcode will generate a Coprocessor Not Available fault (exception 7) when TS = 1. When both MP = 1 and TS = 1, the WAIT opcode generates a trap. Otherwise, the WAIT opcode does not generate a trap. Note that TS is automatically set whenever a task switch operation is performed.

PE (Protection Enable, bit 0)

The PE bit is set to enable the Protected Mode. If PE is reset, the processor operates again in Real Mode. PE may be set by loading MSW or CR0. PE can be reset only by a load into CR0. Resetting the PE bit is typically part of a longer instruction sequence needed for proper transition from Protected Mode to Real Mode. Note that for strict 80286 compatibility, PE cannot be reset by the LMSW instruction.

**CR1: reserved**

CR1 is reserved for use in future Intel processors.

**CR2: Page Fault Linear Address**

CR2, shown in Figure 2-6, holds the 32-bit linear address that caused the last page fault detected. The error code pushed onto the page fault handler's stack when it is invoked provides additional status information on this page fault.

**CR3: Page Directory Base Address**

CR3, shown in Figure 2-6, contains the physical base address of the page directory table. The Intel386 DX page directory table is always page-aligned (4 Kbyte-aligned). Therefore the lowest twelve bits of CR3 are ignored when written and they store as undefined.

A task switch through a TSS which **changes** the value in CR3, or an explicit load into CR3 with any value, will invalidate all cached page table entries in the paging unit cache. Note that if the value in CR3 does not change during the task switch, the cached page table entries are not flushed.

## 2.3.7 System Address Registers

Four special registers are defined to reference the tables or segments supported by the 80286 CPU and Intel386 DX protection model. These tables or segments are:

GDT (Global Descriptor Table),

IDT (Interrupt Descriptor Table),

LDT (Local Descriptor Table),

TSS (Task State Segment).

The addresses of these tables and segments are stored in special registers, the System Address and System Segment Registers illustrated in Figure 2-7. These registers are named GDTR, IDTR, LDTR and TR, respectively. Section 4 **Protected Mode Architecture** describes the use of these registers.

**GDTR and IDTR**

These registers hold the 32-bit linear base address and 16-bit limit of the GDT and IDT, respectively.

The GDT and IDT segments, since they are global to all tasks in the system, are defined by 32-bit linear addresses (subject to page translation if paging is enabled) and 16-bit limit values.

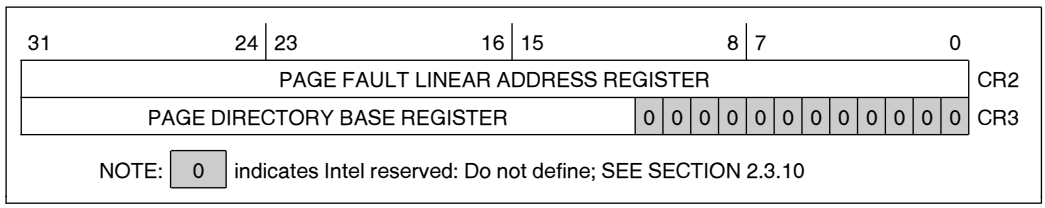


**Figure 2-6. Control Registers 2 and 3**

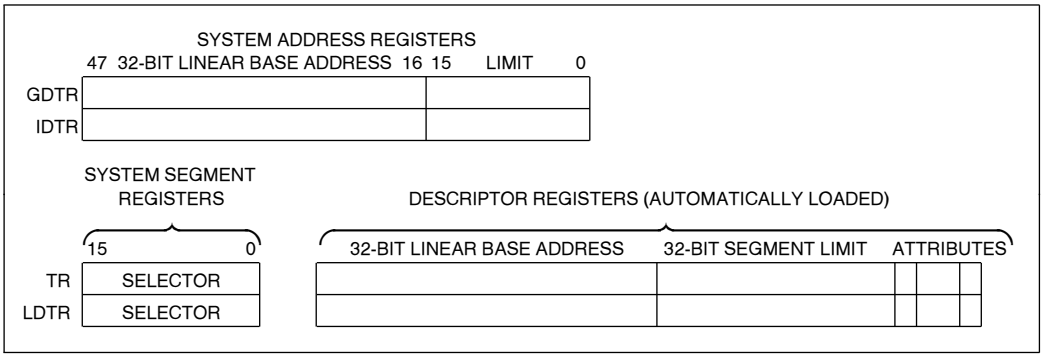


**Figure 2-7. System Address and System Segment Registers**

**LDTR and TR**

These registers hold the 16-bit selector for the LDT descriptor and the TSS descriptor, respectively.

The LDT and TSS segments, since they are task-specific segments, are defined by selector values stored in the system segment registers. Note that a segment descriptor register (programmer-invisible) is associated with each system segment register.

## 2.3.8 Debug and Test Registers

**Debug Registers:** The six programmer accessible debug registers provide on-chip support for debugging. Debug Registers DR0–3 specify the four linear breakpoints. The Debug Control Register DR7 is used to set the breakpoints and the Debug Status Register DR6, displays the current state of the breakpoints. The use of the debug registers is described in section 2.12 **Debugging support.**

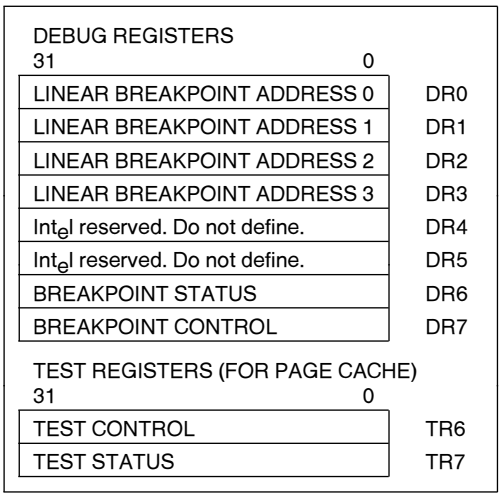


**Figure 2-8. Debug and Test Registers**

**Test Registers:** Two registers are used to control the testing of the RAM/CAM (Content Addressable Memories) in the Translation Lookaside Buffer portion of the Intel386 DX. TR6 is the command test register, and TR7 is the data register which contains the data of the Translation Lookaside buffer test. Their use is discussed in section 2.11 **Testability.**

Figure 2-8 shows the Debug and Test registers.

## 2.3.9 Register Accessibility

There are a few differences regarding the accessibility of the registers in Real and Protected Mode. Table 2-1 summarizes these differences. See Section 4 **Protected Mode Architecture** for further details.

## 2.3.10 Compatibility

**VERY IMPORTANT NOTE:**
**COMPATIBILITY WITH FUTURE PROCESSORS**

**In the preceding register descriptions, note certain Intel386 DX register bits are Intel reserved. When reserved bits are called out, treat them as fully undefined. This is essential for your software compatibility with future processors! Follow the guidelines below:**

1) **Do not depend on the states of any undefined bits when testing the values of defined register bits. Mask them out when testing.**
2) **Do not depend on the states of any undefined bits when storing them to memory or another register.**
3) **Do not depend on the ability to retain information written into any undefined bits.**
4) **When loading registers always load the undefined bits as zeros.**

**Table 2-1. Register Usage**

| Register | Use in Real Mode | | Use in Protected Mode | | Use in Virtual 8086 Mode | |
|---|---|---|---|---|---|---|
| | Load | Store | Load | Store | Load | Store |
| General Registers | Yes | Yes | Yes | Yes | Yes | Yes |
| Segment Registers | Yes | Yes | Yes | Yes | Yes | Yes |
| Flag Register | Yes | Yes | Yes | Yes | IOPL* | IOPL* |
| Control Registers | Yes | Yes | PL = 0 | PL = 0 | No | Yes |
| GDTR | Yes | Yes | PL = 0 | Yes | No | Yes |
| IDTR | Yes | Yes | PL = 0 | Yes | No | Yes |
| LDTR | No | No | PL = 0 | Yes | No | No |
| TR | No | No | PL = 0 | Yes | No | No |
| Debug Control | Yes | Yes | PL = 0 | PL = 0 | No | No |
| Test Registers | Yes | Yes | PL = 0 | PL = 0 | No | No |

**NOTES:**
PL = 0: The registers can be accessed only when the current privilege level is zero.
*IOPL: The PUSHF and POPF instructions are made I/O Privilege Level sensitive in Virtual 8086 Mode.

**5) However, registers which have been previously stored may be reloaded without masking.**

**Depending upon the values of undefined register bits will make your software dependent upon the unspecified Intel386 DX handling of these bits. Depending on undefined values risks making your software incompatible with future processors that define usages for the Intel386 DX-undefined bits. AVOID ANY SOFTWARE DEPENDENCE UPON THE STATE OF UNDEFINED Intel386 DX REGISTER BITS.**

## 2.4 INSTRUCTION SET

### 2.4.1 Instruction Set Overview

The instruction set is divided into nine categories of operations:

Data Transfer
Arithmetic
Shift/Rotate
String Manipulation
Bit Manipulation
Control Transfer
High Level Language Support
Operating System Support
Processor Control

These Intel386 DX instructions are listed in Table 2-2.

All Intel386 DX instructions operate on either 0, 1, 2, or 3 operands; where an operand resides in a register, in the instruction itself, or in memory. Most zero operand instructions (e.g. CLI, STI) take only one byte. One operand instructions generally are two bytes long. The average instruction is 3.2 bytes long. Since the Intel386 DX has a 16-byte instruction queue, an average of 5 instructions will be prefetched. The use of two operands permits the following types of common instructions:

Register to Register
Memory to Register
Immediate to Register
Register to Memory
Immediate to Memory.

The operands can be either 8, 16, or 32 bits long. As a general rule, when executing code written for the Intel386 DX (32-bit code), operands are 8 or 32 bits; when executing existing 80286 or 8086 code (16-bit code), operands are 8 or 16 bits. Prefixes can be added to all instructions which override the default length of the operands, (i.e. use 32-bit operands for 16-bit code, or 16-bit operands for 32-bit code).

For a more elaborate description of the instruction set, refer to the *Intel386 DX Programmer's Reference Manual.*

### 2.4.2 Intel386™ DX Instructions

**Table 2-2a. Data Transfer**

| | |
|---|---|
| **GENERAL PURPOSE** | |
| MOV | Move operand |
| PUSH | Push operand onto stack |
| POP | Pop operand off stack |
| PUSHA | Push all registers on stack |
| POPA | Pop all registers off stack |
| XCHG | Exchange Operand, Register |
| XLAT | Translate |
| **CONVERSION** | |
| MOVZX | Move byte or Word, Dword, with zero extension |
| MOVSX | Move byte or Word, Dword, sign extended |
| CBW | Convert byte to Word, or Word to Dword |
| CWD | Convert Word to DWORD |
| CWDE | Convert Word to DWORD extended |
| CDQ | Convert DWORD to QWORD |
| **INPUT/OUTPUT** | |
| IN | Input operand from I/O space |
| OUT | Output operand to I/O space |
| **ADDRESS OBJECT** | |
| LEA | Load effective address |
| LDS | Load pointer into D segment register |
| LES | Load pointer into E segment register |
| LFS | Load pointer into F segment register |
| LGS | Load pointer into G segment register |
| LSS | Load pointer into S (Stack) segment register |
| **FLAG MANIPULATION** | |
| LAHF | Load A register from Flags |
| SAHF | Store A register in Flags |
| PUSHF | Push flags onto stack |
| POPF | Pop flags off stack |
| PUSHFD | Push EFlags onto stack |
| POPFD | Pop EFlags off stack |
| CLC | Clear Carry Flag |
| CLD | Clear Direction Flag |
| CMC | Complement Carry Flag |
| STC | Set Carry Flag |
| STD | Set Direction Flag |

**Table 2-2b. Arithmetic Instructions**

| | |
|---|---|
| **ADDITION** | |
| ADD | Add operands |
| ADC | Add with carry |
| INC | Increment operand by 1 |
| AAA | ASCII adjust for addition |
| DAA | Decimal adjust for addition |
| **SUBTRACTION** | |
| SUB | Subtract operands |
| SBB | Subtract with borrow |
| DEC | Decrement operand by 1 |
| NEG | Negate operand |
| CMP | Compare operands |
| DAS | Decimal adjust for subtraction |
| AAS | ASCII Adjust for subtraction |
| **MULTIPLICATION** | |
| MUL | Multiply Double/Single Precision |
| IMUL | Integer multiply |
| AAM | ASCII adjust after multiply |
| **DIVISION** | |
| DIV | Divide unsigned |
| IDIV | Integer Divide |
| AAD | ASCII adjust before division |

**Table 2-2c. String Instructions**

| | |
|---|---|
| MOVS | Move byte or Word, Dword string |
| INS | Input string from I/O space |
| OUTS | Output string to I/O space |
| CMPS | Compare byte or Word, Dword string |
| SCAS | Scan Byte or Word, Dword string |
| LODS | Load byte or Word, Dword string |
| STOS | Store byte or Word, Dword string |
| REP | Repeat |
| REPE/ REPZ | Repeat while equal/zero |
| RENE/ REPNZ | Repeat while not equal/not zero |

**Table 2-2d. Logical Instructions**

| | |
|---|---|
| **LOGICALS** | |
| NOT | ‘‘NOT’’ operands |
| AND | ‘‘AND’’ operands |
| OR | ‘‘Inclusive OR’’ operands |
| XOR | ‘‘Exclusive OR’’ operands |
| TEST | ‘‘Test’’ operands |

**Table 2-2d. Logical Instructions** (Continued)

| SHIFTS | |
|---|---|
| SHL/SHR | Shift logical left or right |
| SAL/SAR | Shift arithmetic left or right |
| SHLD/ SHRD | Double shift left or right |
| **ROTATES** | |
| ROL/ROR | Rotate left/right |
| RCL/RCR | Rotate through carry left/right |

**Table 2-2e. Bit Manipulation Instructions**

| SINGLE BIT INSTRUCTIONS | |
|---|---|
| BT | Bit Test |
| BTS | Bit Test and Set |
| BTR | Bit Test and Reset |
| BTC | Bit Test and Complement |
| BSF | Bit Scan Forward |
| BSR | Bit Scan Reverse |

**Table 2-2f. Program Control Instructions**

| CONDITIONAL TRANSFERS | |
|---|---|
| SETCC | Set byte equal to condition code |
| JA/JNBE | Jump if above/not below nor equal |
| JAE/JNB | Jump if above or equal/not below |
| JB/JNAE | Jump if below/not above nor equal |
| JBE/JNA | Jump if below or equal/not above |
| JC | Jump if carry |
| JE/JZ | Jump if equal/zero |
| JG/JNLE | Jump if greater/not less nor equal |
| JGE/JNL | Jump if greater or equal/not less |
| JL/JNGE | Jump if less/not greater nor equal |
| JLE/JNG | Jump if less or equal/not greater |
| JNC | Jump if not carry |
| JNE/JNZ | Jump if not equal/not zero |
| JNO | Jump if not overflow |
| JNP/JPO | Jump if not parity/parity odd |
| JNS | Jump if not sign |
| JO | Jump if overflow |
| JP/JPE | Jump if parity/parity even |
| JS | Jump if Sign |

**Table 2-2f. Program Control Instructions** (Continued)

| UNCONDITIONAL TRANSFERS | |
|---|---|
| CALL | Call procedure/task |
| RET | Return from procedure |
| JMP | Jump |
| **ITERATION CONTROLS** | |
| LOOP | Loop |
| LOOPE/ LOOPZ | Loop if equal/zero |
| LOOPNE/ LOOPNZ | Loop if not equal/not zero |
| JCXZ | JUMP if register CX = 0 |
| **INTERRUPTS** | |
| INT | Interrupt |
| INTO | Interrupt if overflow |
| IRET | Return from Interrupt/Task |
| CLI | Clear interrupt Enable |
| STI | Set Interrupt Enable |

**Table 2-2g. High Level Language Instructions**

| | |
|---|---|
| BOUND | Check Array Bounds |
| ENTER | Setup Parameter Block for Entering Procedure |
| LEAVE | Leave Procedure |

**Table 2-2h. Protection Model**

| | |
|---|---|
| SGDT | Store Global Descriptor Table |
| SIDT | Store Interrupt Descriptor Table |
| STR | Store Task Register |
| SLDT | Store Local Descriptor Table |
| LGDT | Load Global Descriptor Table |
| LIDT | Load Interrupt Descriptor Table |
| LTR | Load Task Register |
| LLDT | Load Local Descriptor Table |
| ARPL | Adjust Requested Privilege Level |
| LAR | Load Access Rights |
| LSL | Load Segment Limit |
| VERR/ VERW | Verify Segment for Reading or Writing |
| LMSW | Load Machine Status Word (lower 16 bits of CR0) |
| SMSW | Store Machine Status Word |

**Table 2-2i. Processor Control Instructions**

| | |
|---|---|
| HLT | Halt |
| WAIT | Wait until BUSY# negated |
| ESC | Escape |
| LOCK | Lock Bus |

## 2.5 ADDRESSING MODES

### 2.5.1 Addressing Modes Overview

The Intel386 DX provides a total of 11 addressing modes for instructions to specify operands. The addressing modes are optimized to allow the efficient execution of high level languages such as C and FORTRAN, and they cover the vast majority of data references needed by high-level languages.

### 2.5.2 Register and Immediate Modes

Two of the addressing modes provide for instructions that operate on register or immediate operands:

**Register Operand Mode:** The operand is located in one of the 8-, 16- or 32-bit general registers.

**Immediate Operand Mode:** The operand is included in the instruction as part of the opcode.

### 2.5.3 32-Bit Memory Addressing Modes

The remaining 9 modes provide a mechanism for specifying the effective address of an operand. The linear address consists of two components: the segment base address and an effective address. The effective address is calculated by using combinations of the following four address elements:

**DISPLACEMENT:** An 8-, or 32-bit immediate value, following the instruction.

**BASE:** The contents of any general purpose register. The base registers are generally used by compilers to point to the start of the local variable area.

**INDEX:** The contents of any general purpose register except for ESP. The index registers are used to access the elements of an array, or a string of characters.

**SCALE:** The index register's value can be multiplied by a scale factor, either 1, 2, 4 or 8. Scaled index mode is especially useful for accessing arrays or structures.

Combinations of these 4 components make up the 9 additional addressing modes. There is no performance penalty for using any of these addressing combinations, since the effective address calculation is pipelined with the execution of other instructions. The one exception is the simultaneous use of Base and Index components which requires one additional clock.

As shown in Figure 2-9, the effective address (EA) of an operand is calculated according to the following formula.

EA = Base Reg + (Index Reg * Scaling) + Displacement

Direct Mode: The operand's offset is contained as part of the instruction as an 8-, 16- or 32-bit displacement.
**EXAMPLE: INC Word PTR [500]**

Register Indirect Mode: A BASE register contains the address of the operand.
**EXAMPLE: MOV [ECX], EDX**

Based Mode: A BASE register's contents is added to a DISPLACEMENT to form the operands offset.
**EXAMPLE: MOV ECX, [EAX + 24]**

Index Mode: An INDEX register's contents is added to a DISPLACEMENT to form the operands offset.
**EXAMPLE: ADD EAX, TABLE[ESI]**

Scaled Index Mode: An INDEX register's contents is multiplied by a scaling factor which is added to a DISPLACEMENT to form the operands offset.
**EXAMPLE: IMUL EBX, TABLE[ESI*4],7**

Based Index Mode: The contents of a BASE register is added to the contents of an INDEX register to form the effective address of an operand.
**EXAMPLE: MOV EAX, [ESI] [EBX]**

Based Scaled Index Mode: The contents of an INDEX register is multiplied by a SCALING factor and the result is added to the contents of a BASE register to obtain the operands offset.
**EXAMPLE: MOV ECX, [EDX*8] [EAX]**

Based Index Mode with Displacement: The contents of an INDEX Register and a BASE register's contents and a DISPLACEMENT are all summed together to form the operand offset.
**EXAMPLE: ADD EDX, [ESI] [EBP + 00FFFFF0H]**

Based Scaled Index Mode with Displacement: The contents of an INDEX register are multiplied by a SCALING factor, the result is added to the contents of a BASE register and a DISPLACEMENT to form the operand's offset.
**EXAMPLE: MOV EAX, LOCALTABLE[EDI*4] [EBP + 80]**

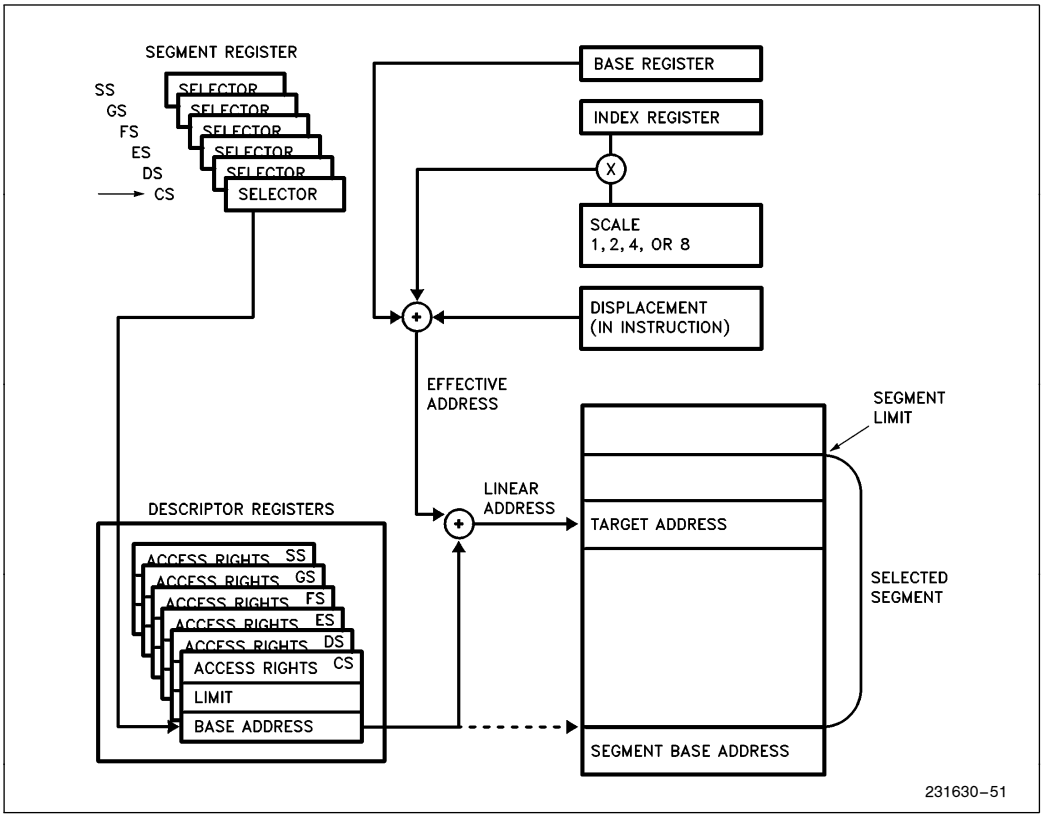


**Figure 2-9. Addressing Mode Calculations**

### 2.5.4 Differences Between 16 and 32 Bit Addresses

In order to provide software compatibility with the 80286 and the 8086, the Intel386 DX can execute 16-bit instructions in Real and Protected Modes. The processor determines the size of the instructions it is executing by examining the D bit in the CS segment Descriptor. If the D bit is 0 then all operand lengths and effective addresses are assumed to be 16 bits long. If the D bit is 1 then the default length for operands and addresses is 32 bits. In Real Mode the default size for operands and addresses is 16-bits.

Regardless of the default precision of the operands or addresses, the Intel386 DX is able to execute either 16 or 32-bit instructions. This is specified via the use of override prefixes. Two prefixes, the **Operand Size Prefix** and the **Address Length Prefix**, override the value of the D bit on an individual instruction basis. These prefixes are automatically added by Intel assemblers.

Example: The processor is executing in Real Mode and the programmer needs to access the EAX registers. The assembler code for this might be MOV EAX, 32-bit MEMORYOP, ASM386 Macro Assembler automatically determines that an Operand Size Prefix is needed and generates it.

Example: The D bit is 0, and the programmer wishes to use Scaled Index addressing mode to access an array. The Address Length Prefix allows the use of MOV DX, TABLE[ESI*2]. The assembler uses an Address Length Prefix since, with D = 0, the default addressing mode is 16-bits.

Example: The D bit is 1, and the program wants to store a 16-bit quantity. The Operand Length Prefix is used to specify only a 16-bit value; MOV MEM16, DX.

**Table 2-3. BASE and INDEX Registers for 16- and 32-Bit Addresses**

| | 16-Bit Addressing | 32-Bit Addressing |
|---|---|---|
| BASE REGISTER | BX,BP | Any 32-bit GP Register |
| INDEX REGISTER | SI,DI | Any 32-bit GP Register Except ESP |
| SCALE FACTOR | none | 1, 2, 4, 8 |
| DISPLACEMENT | 0, 8, 16 bits | 0, 8, 32 bits |

The OPERAND LENGTH and Address Length Prefixes can be applied separately or in combination to any instruction. The Address Length Prefix does not allow addresses over 64K bytes to be accessed in Real Mode. A memory address which exceeds FFFFH will result in a General Protection Fault. An Address Length Prefix only allows the use of the additional Intel386 DX addressing modes.

When executing 32-bit code, the Intel386 DX uses either 8-, or 32-bit displacements, and any register can be used as base or index registers. When executing 16-bit code, the displacements are either 8, or 16 bits, and the base and index register conform to the 80286 model. Table 2-3 illustrates the differences.

## 2.6 DATA TYPES

The Intel386 DX supports all of the data types commonly used in high level languages:

Bit: A single bit quantity.

Bit Field: A group of up to 32 contiguous bits, which spans a maximum of four bytes.

Bit String: A set of contiguous bits, on the Intel386 DX bit strings can be up to 4 gigabits long.

Byte: A signed 8-bit quantity.

Unsigned Byte: An unsigned 8-bit quantity.

Integer (Word): A signed 16-bit quantity.

Long Integer (Double Word): A signed 32-bit quantity. All operations assume a 2's complement representation.

Unsigned Integer (Word): An unsigned 16-bit quantity.

Unsigned Long Integer (Double Word): An unsigned 32-bit quantity.

Signed Quad Word: A signed 64-bit quantity.

Unsigned Quad Word: An unsigned 64-bit quantity.

Offset: A 16- or 32-bit offset only quantity which indirectly references another memory location.

Pointer: A full pointer which consists of a 16-bit segment selector and either a 16- or 32-bit offset.

Char: A byte representation of an ASCII Alphanumeric or control character.

String: A contiguous sequence of bytes, words or dwords. A string may contain between 1 byte and 4 Gbytes.

BCD: A byte (unpacked) representation of decimal digits 0–9.

Packed BCD: A byte (packed) representation of two decimal digits 0–9 storing one digit in each nibble.

When the Intel386 DX is coupled with an Intel387 DX Numerics Coprocessor then the following common Floating Point types are supported.

Floating Point: A signed 32-, 64-, or 80-bit real number representation. Floating point numbers are supported by the Intel387 DX numerics coprocessor.

Figure 2-10 illustrates the data types supported by the Intel386 DX and the Intel387 DX numerics coprocessor.

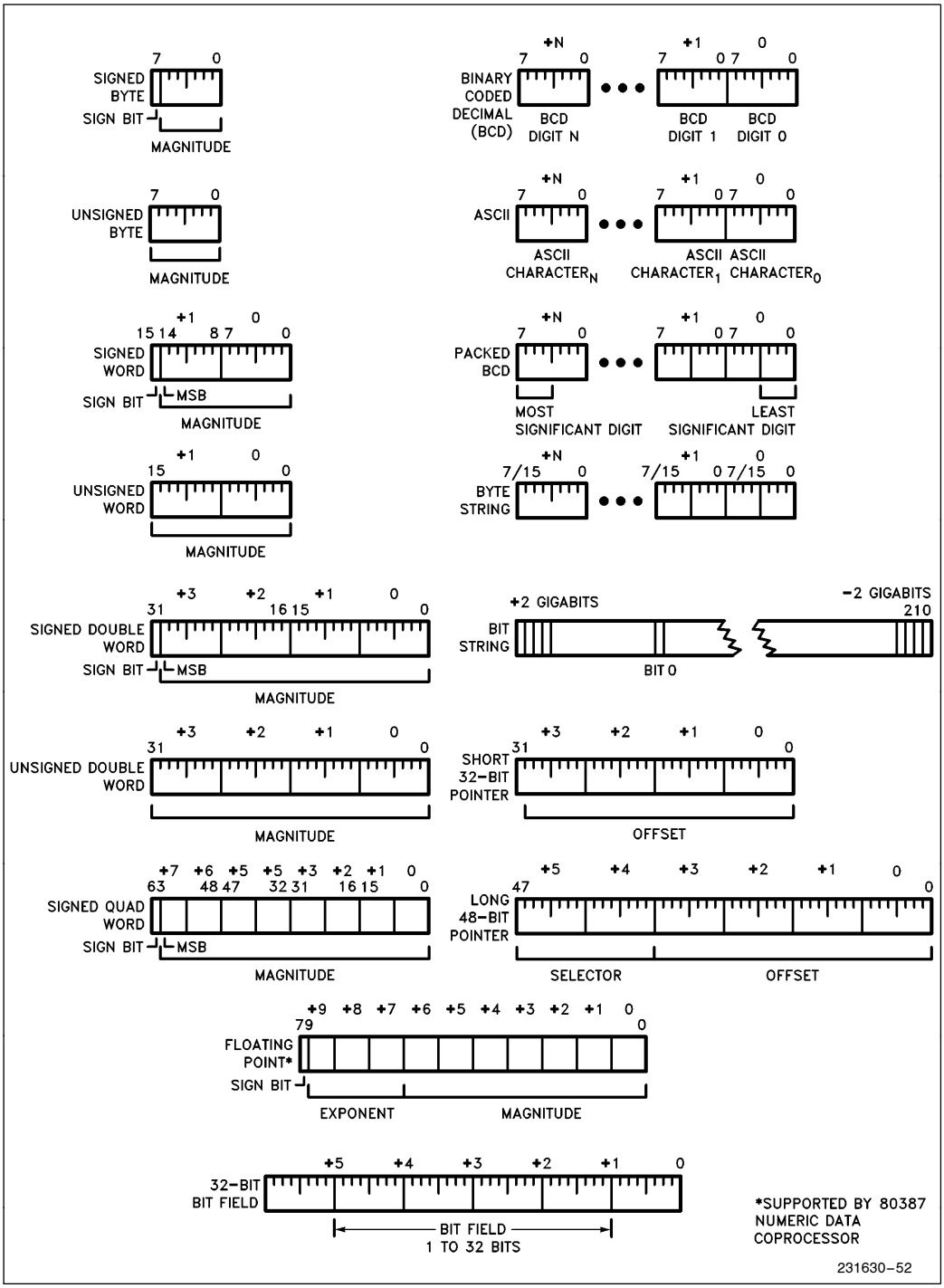


**Figure 2-10. Intel386™ DX Supported Data Types**

## 2.7 MEMORY ORGANIZATION

### 2.7.1 Introduction

Memory on the Intel386 DX is divided up into 8-bit quantities (bytes), 16-bit quantities (words), and 32-bit quantities (dwords). Words are stored in two consecutive bytes in memory with the low-order byte at the lowest address, the high order byte at the high address. Dwords are stored in four consecutive bytes in memory with the low-order byte at the lowest address, the high-order byte at the highest address. The address of a word or dword is the byte address of the low-order byte.

In addition to these basic data types, the Intel386 DX supports two larger units of memory: pages and segments. Memory can be divided up into one or more variable length segments, which can be swapped to disk or shared between programs. Memory can also be organized into one or more 4K byte pages. Finally, both segmentation and paging can be combined, gaining the advantages of both systems. The Intel386 DX supports both pages and segments in order to provide maximum flexibility to the system designer. Segmentation and paging are complementary. Segmentation is useful for organizing memory in logical modules, and as such is a tool for the application programmer, while pages are useful for the system programmer for managing the physical memory of a system.

### 2.7.2 Address Spaces

The Intel386 DX has three distinct address spaces: **logical, linear,** and **physical**. A **logical** address (also known as a **virtual** address) consists of a selector and an offset. A selector is the contents of a segment register. An offset is formed by summing all of the addressing components (BASE, INDEX, DISPLACEMENT) discussed in section 2.5.3 **Memory Addressing Modes** into an effective address. Since each task on Intel386 DX has a maximum of 16K ($2^{14} - 1$) selectors, and offsets can be 4 gigabytes, ($2^{32}$ bits) this gives a total of $2^{46}$ bits or 64 terabytes of **logical** address space per task. The programmer sees this virtual address space.

The segmentation unit translates the **logical** address space into a 32-bit **linear** address space. If the paging unit is not enabled then the 32-bit **linear** address corresponds to the **physical** address. The paging unit translates the **linear** address space into the **physical** address space. The **physical address** is what appears on the address pins.

The primary difference between Real Mode and Protected Mode is how the segmentation unit performs the translation of the **logical** address into the **linear** address. In Real Mode, the segmentation unit shifts the selector left four bits and adds the result to the offset to form the **linear** address. While in Protected Mode every selector has a **linear** base address associated with it. The **linear base** address is stored in one of two operating system tables (i.e. the Local Descriptor Table or Global Descriptor Table). The selector's **linear base** address is added to the offset to form the final **linear** address.

Figure 2-11 shows the relationship between the various address spaces.

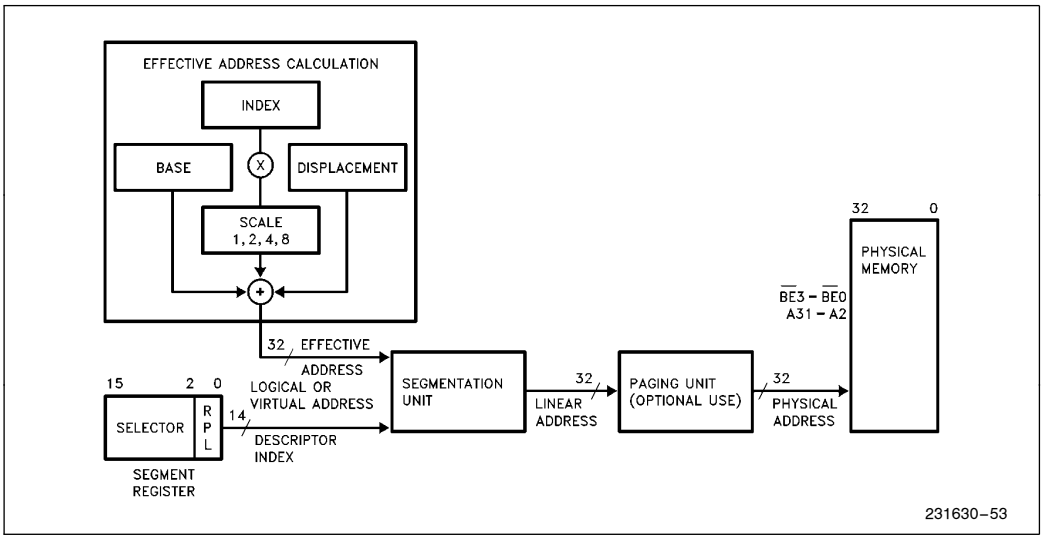


**Figure 2-11. Address Translation**

### 2.7.3 Segment Register Usage

The main data structure used to organize memory is the segment. On the Intel386 DX, segments are variable sized blocks of linear addresses which have certain attributes associated with them. There are two main types of segments: code and data, the segments are of variable size and can be as small as 1 byte or as large as 4 gigabytes ($2^{32}$ bytes).

In order to provide compact instruction encoding, and increase processor performance, instructions do not need to explicitly specify which segment register is used. A default segment register is automatically chosen according to the rules of Table 2-4 (Segment Register Selection Rules). In general, data references use the selector contained in the DS register; Stack references use the SS register and Instruction fetches use the CS register. The contents of the Instruction Pointer provides the offset. Special segment override prefixes allow the explicit use of a given segment register, and override the implicit rules listed in Table 2-4. The override prefixes also allow the use of the ES, FS and GS segment registers.

There are no restrictions regarding the overlapping of the base addresses of any segments. Thus, all 6 segments could have the base address set to zero and create a system with a four gigabyte linear address space. This creates a system where the virtual address space is the same as the linear address space. Further details of segmentation are discussed in section 4.1.

## 2.8 I/O SPACE

The Intel386 DX has two distinct physical address spaces: Memory and I/O. Generally, peripherals are placed in I/O space although the Intel386 DX also supports memory-mapped peripherals. The I/O space consists of 64K bytes, it can be divided into 64K 8-bit ports, 32K 16-bit ports, or 16K 32-bit ports, or any combination of ports which add up to less than 64K bytes. The 64K I/O address space refers to physical memory rather than linear address since I/O instructions do not go through the segmentation or paging hardware. The M/IO# pin acts as an additional address line thus allowing the system designer to easily determine which address space the processor is accessing.

**Table 2-4. Segment Register Selection Rules**

| Type of Memory Reference | Implied (Default) Segment Use | Segment Override Prefixes Possible |
|---|---|---|
| Code Fetch | CS | None |
| Destination of PUSH, PUSHF, INT, CALL, PUSHA Instructions | SS | None |
| Source of POP, POPA, POPF, IRET, RET instructions | SS | None |
| Destination of STOS, MOVS, REP STOS, REP MOVS Instructions (DI is Base Register) | ES | None |
| Other Data References, with Effective Address Using Base Register of: | | |
| [EAX] | DS | DS,CS,SS,ES,FS,GS |
| [EBX] | DS | DS,CS,SS,ES,FS,GS |
| [ECX] | DS | DS,CS,SS,ES,FS,GS |
| [EDX] | DS | DS,CS,SS,ES,FS,GS |
| [ESI] | DS | DS,CS,SS,ES,FS,GS |
| [EDI] | DS | DS,CS,SS,ES,FS,GS |
| [EBP] | SS | DS,CS,SS,ES,FS,GS |
| [ESP] | SS | DS,CS,SS,ES,FS,GS |

The I/O ports are accessed via the IN and OUT I/O instructions, with the port address supplied as an immediate 8-bit constant in the instruction or in the DX register. All 8- and 16-bit port addresses are zero extended on the upper address lines. The I/O instructions cause the M/IO# pin to be driven low.

I/O port addresses 00F8H through 00FFH are reserved for use by Intel.

## 2.9 INTERRUPTS

### 2.9.1 Interrupts and Exceptions

Interrupts and exceptions alter the normal program flow, in order to handle external events, to report errors or exceptional conditions. The difference between interrupts and exceptions is that interrupts are used to handle asynchronous external events while exceptions handle instruction faults. Although a program can generate a software interrupt via an INT N instruction, the processor treats software interrupts as exceptions.

Hardware interrupts occur as the result of an external event and are classified into two types: maskable or non-maskable. Interrupts are serviced after the execution of the current instruction. After the interrupt handler is finished servicing the interrupt, execution proceeds with the instruction immediately **after** the interrupted instruction. Sections 2.9.3 and 2.9.4 discuss the differences between Maskable and Non-Maskable interrupts.

Exceptions are classified as faults, traps, or aborts depending on the way they are reported, and whether or not restart of the instruction causing the exception is supported. **Faults** are exceptions that are detected and serviced **before** the execution of the faulting instruction. A fault would occur in a virtual memory system, when the processor referenced a page or a segment which was not present. The operating system would fetch the page or segment from disk, and then the Intel386 DX would restart the instruction. **Traps** are exceptions that are reported immediately **after** the execution of the instruction which caused the problem. User defined interrupts are examples of traps. **Aborts** are exceptions which do not permit the precise location of the instruction causing the exception to be determined. Aborts are used to report severe errors, such as a hardware error, or illegal values in system tables.

Thus, when an interrupt service routine has been completed, execution proceeds from the instruction immediately following the interrupted instruction. On the other hand, the return address from an exception fault routine will always point at the instruction causing the exception and include any leading instruction prefixes. Table 2-5 summarizes the possible interrupts for the Intel386 DX and shows where the return address points.

The Intel386 DX has the ability to handle up to 256 different interrupts/exceptions. In order to service the interrupts, a table with up to 256 interrupt vectors must be defined. The interrupt vectors are simply pointers to the appropriate interrupt service routine. In Real Mode (see section 3.1), the vectors are 4 byte quantities, a Code Segment plus a 16-bit offset; in Protected Mode, the interrupt vectors are 8 byte quantities, which are put in an Interrupt Descriptor Table (see section 4.1). Of the 256 possible interrupts, 32 are reserved for use by Intel, the remaining 224 are free to be used by the system designer.

### 2.9.2 Interrupt Processing

When an interrupt occurs the following actions happen. First, the current program address and the Flags are saved on the stack to allow resumption of the interrupted program. Next, an 8-bit vector is supplied to the Intel386 DX which identifies the appropriate entry in the interrupt table. The table contains the starting address of the interrupt service routine. Then, the user supplied interrupt service routine is executed. Finally, when an IRET instruction is executed the old processor state is restored and program execution resumes at the appropriate instruction.

The 8-bit interrupt vector is supplied to the Intel386 DX in several different ways: exceptions supply the interrupt vector internally; software INT instructions contain or imply the vector; maskable hardware interrupts supply the 8-bit vector via the interrupt acknowledge bus sequence. Non-Maskable hardware interrupts are assigned to interrupt vector 2.

### 2.9.3 Maskable Interrupt

Maskable interrupts are the most common way used by the Intel386 DX to respond to asynchronous external hardware events. A hardware interrupt occurs when the INTR is pulled high and the Interrupt Flag bit (IF) is enabled. The processor only responds to interrupts between instructions, (REPeat String instructions, have an ''interrupt window'', between memory moves, which allows interrupts during long

**Table 2-5. Interrupt Vector Assignments**

| Function | Interrupt Number | Instruction Which Can Cause Exception | Return Address Points to Faulting Instruction | Type |
|---|---|---|---|---|
| Divide Error | 0 | DIV, IDIV | YES | FAULT |
| Debug Exception | 1 | any instruction | YES | TRAP* |
| NMI Interrupt | 2 | INT 2 or NMI | NO | NMI |
| One Byte Interrupt | 3 | INT | NO | TRAP |
| Interrupt on Overflow | 4 | INTO | NO | TRAP |
| Array Bounds Check | 5 | BOUND | YES | FAULT |
| Invalid OP-Code | 6 | Any Illegal Instruction | YES | FAULT |
| Device Not Available | 7 | ESC, WAIT | YES | FAULT |
| Double Fault | 8 | Any Instruction That Can Generate an Exception | | ABORT |
| Coprocessor Segment Overrun | 9 | ESC | NO | ABORT |
| Invalid TSS | 10 | JMP, CALL, IRET, INT | YES | FAULT |
| Segment Not Present | 11 | Segment Register Instructions | YES | FAULT |
| Stack Fault | 12 | Stack References | YES | FAULT |
| General Protection Fault | 13 | Any Memory Reference | YES | FAULT |
| Intel Reserved | 15 | | | |
| Page Fault | 14 | Any Memory Access or Code Fetch | YES | FAULT |
| Coprocessor Error | 16 | ESC, WAIT | YES | FAULT |
| Intel Reserved | 17–31 | | | |
| Two Byte Interrupt | 0–255 | INT n | NO | TRAP |

* Some debug exceptions may report both traps on the previous instruction, and faults on the next instruction.

string moves). When an interrupt occurs the processor reads an 8-bit vector supplied by the hardware which identifies the source of the interrupt, (one of 224 user defined interrupts). The exact nature of the interrupt sequence is discussed in section 5.

The IF bit in the EFLAG registers is reset when an interrupt is being serviced. This effectively disables servicing additional interrupts during an interrupt service routine. However, the IF may be set explicitly by the interrupt handler, to allow the nesting of interrupts. When an IRET instruction is executed the original state of the IF is restored.

### 2.9.4 Non-Maskable Interrupt

Non-maskable interrupts provide a method of servicing very high priority interrupts. A common example of the use of a non-maskable interrupt (NMI) would be to activate a power failure routine. When the NMI input is pulled high it causes an interrupt with an internally supplied vector value of 2. Unlike a normal hardware interrupt, no interrupt acknowledgment sequence is performed for an NMI.

While executing the NMI servicing procedure, the Intel386 DX will not service further NMI requests, until an interrupt return (IRET) instruction is executed or the processor is reset. If NMI occurs while currently servicing an NMI, its presence will be saved for servicing after executing the first IRET instruction. The IF bit is cleared at the beginning of an NMI interrupt to inhibit further INTR interrupts.

### 2.9.5 Software Interrupts

A third type of interrupt/exception for the Intel386 DX is the software interrupt. An INT n instruction causes the processor to execute the interrupt service routine pointed to by the nth vector in the interrupt table.

A special case of the two byte software interrupt INT n is the one byte INT 3, or breakpoint interrupt. By inserting this one byte instruction in a program, the user can set breakpoints in his program as a debugging tool.

A final type of software interrupt, is the single step interrupt. It is discussed in section 2.12.

### 2.9.6 Interrupt and Exception Priorities

Interrupts are externally-generated events. Maskable Interrupts (on the INTR input) and Non-Maskable Interrupts (on the NMI input) are recognized at instruction boundaries. When NMI and maskable INTR are **both** recognized at the **same** instruction boundary, the Intel386 DX invokes the NMI service routine first. If, after the NMI service routine has been invoked, maskable interrupts are still enabled, then the Intel386 DX will invoke the appropriate interrupt service routine.

**Table 2-6a. Intel386™ DX Priority for Invoking Service Routines in Case of Simultaneous External Interrupts**

| |
|---|
| 1. NMI |
| 2. INTR |

Exceptions are internally-generated events. Exceptions are detected by the Intel386 DX if, in the course of executing an instruction, the Intel386 DX detects a problematic condition. The Intel386 DX then immediately invokes the appropriate exception service routine. The state of the Intel386 DX is such that the instruction causing the exception can be restarted. If the exception service routine has taken care of the problematic condition, the instruction will execute without causing the same exception.

It is possible for a single instruction to generate several exceptions (for example, transferring a single operand could generate two page faults if the operand location spans two ''not present'' pages). However, only one exception is generated upon each attempt to execute the instruction. Each exception service routine should correct its corresponding exception, and restart the instruction. In this manner, exceptions are serviced until the instruction executes successfully.

As the Intel386 DX executes instructions, it follows a consistent cycle in checking for exceptions, as shown in Table 2-6b. This cycle is repeated as each instruction is executed, and occurs in parallel with instruction decoding and execution.

**Table 2-6b. Sequence of Exception Checking**

Consider the case of the Intel386 DX having just completed an instruction. It then performs the following checks before reaching the point where the next instruction is completed:

1. Check for Exception 1 Traps from the instruction just completed (single-step via Trap Flag, or Data Breakpoints set in the Debug Registers).
2. Check for Exception 1 Faults in the next instruction (Instruction Execution Breakpoint set in the Debug Registers for the next instruction).
3. Check for external NMI and INTR.
4. Check for Segmentation Faults that prevented fetching the entire next instruction (exceptions 11 or 13).
5. Check for Page Faults that prevented fetching the entire next instruction (exception 14).
6. Check for Faults decoding the next instruction (exception 6 if illegal opcode; exception 6 if in Real Mode or in Virtual 8086 Mode and attempting to execute an instruction for Protected Mode only (see 4.6.4); or exception 13 if instruction is longer than 15 bytes, or privilege violation in Protected Mode (i.e. not at IOPL or at CPL = 0).
7. If WAIT opcode, check if TS = 1 and MP = 1 (exception 7 if both are 1).
8. If ESCAPE opcode for numeric coprocessor, check if EM = 1 or TS = 1 (exception 7 if either are 1).
9. If WAIT opcode or ESCAPE opcode for numeric coprocessor, check ERROR# input signal (exception 16 if ERROR# input is asserted).
10. Check in the following order for each memory reference required by the instruction:
    a. Check for Segmentation Faults that prevent transferring the entire memory quantity (exceptions 11, 12, 13).
    b. Check for Page Faults that prevent transferring the entire memory quantity (exception 14).

Note that the order stated supports the concept of the paging mechanism being ''underneath'' the segmentation mechanism. Therefore, for any given code or data reference in memory, segmentation exceptions are generated before paging exceptions are generated.

### 2.9.7 Instruction Restart

The Intel386 DX fully supports restarting all instructions after faults. If an exception is detected in the instruction to be executed (exception categories 4 through 10 in Table 2-6b), the Intel386 DX invokes the appropriate exception service routine. The Intel386 DX is in a state that permits restart of the instruction, for all cases but those in Table 2-6c. Note that all such cases are easily avoided by proper design of the operating system.

**Table 2-6c. Conditions Preventing Instruction Restart**

A. An instruction causes a task switch to a task whose Task State Segment is **partially** ''not present''. (An entirely ''not present'' TSS is restartable.) Partially present TSS's can be avoided either by keeping the TSS's of such tasks present in memory, or by aligning TSS segments to reside entirely within a single 4K page (for TSS segments of 4K bytes or less).

B. A coprocessor operand wraps around the top of a 64K-byte segment or a 4G-byte segment, and spans three pages, and the page holding the middle portion of the operand is ''not present.'' This condition can be avoided by starting **at a page boundary** any segments containing coprocessor operands if the segments are approximately 64K-200 bytes or larger (i.e. large enough for wraparound of the coprocessor operand to possibly occur).

Note that these conditions are avoided by using the operating system designs mentioned in this table.

### 2.9.8 Double Fault

A Double Fault (exception 8) results when the processor attempts to invoke an exception service routine for the segment exceptions (10, 11, 12 or 13), but in the process of doing so, detects an exception **other than** a Page Fault (exception 14).

A Double Fault (exception 8) will also be generated when the processor attempts to invoke the Page Fault (exception 14) service routine, and detects an exception other than a second Page Fault. In any functional system, the entire Page Fault service routine must remain ''present'' in memory.

Double page faults however do not raise the double fault exception. If a second page fault occurs while the processor is attempting to enter the service routine for the first time, then the processor will invoke the page fault (exception 14) handler a second time, rather than the double fault (exception 8) handler. A subsequent fault, though, will lead to shutdown.

When a Double Fault occurs, the Intel386 DX invokes the exception service routine for exception 8.

## 2.10 RESET AND INITIALIZATION

When the processor is initialized or Reset the registers have the values shown in Table 2-7. The Intel386 DX will then start executing instructions near the top of physical memory, at location FFFFFFF0H. When the first InterSegment Jump or Call is executed, address lines A20-31 will drop low for CS-relative memory cycles, and the Intel386 DX will only execute instructions in the lower one megabyte of physical memory. This allows the system designer to use a ROM at the top of physical memory to initialize the system and take care of Resets.

RESET forces the Intel386 DX to terminate all execution and local bus activity. No instruction execution or bus activity will occur as long as Reset is active. Between 350 and 450 CLK2 periods after Reset becomes inactive the Intel386 DX will start executing instructions at the top of physical memory.

**Table 2-7. Register Values after Reset**

| | | |
|---|---|---|
| Flag Word | UUUU0002H | Note 1 |
| Machine Status Word (CR0) | UUUUUUU0H | Note 2 |
| Instruction Pointer | 0000FFF0H | |
| Code Segment | F000H | Note 3 |
| Data Segment | 0000H | |
| Stack Segment | 0000H | |
| Extra Segment (ES) | 0000H | |
| Extra Segment (FS) | 0000H | |
| Extra Segment (GS) | 0000H | |
| DX register | component and stepping ID | Note 5 |
| All other registers | undefined | Note 4 |

**NOTES:**
1. EFLAG Register. The upper 14 bits of the EFLAGS register are undefined, VM (Bit 17) and RF (BIT) 16 are 0 as are all other defined flag bits.
2. CR0: (Machine Status Word). All of the defined fields in the CR0 are 0 (PG Bit 31, TS Bit 3, EM Bit 2, MP Bit 1, and PE Bit 0).
3. The Code Segment Register (CS) will have its Base Address set to FFFF0000H and Limit set to 0FFFFH.
4. All undefined bits are Intel Reserved and should not be used.
5. DX register always holds component and stepping identifier (see 5.7). EAX register holds self-test signature if self-test was requested (see 5.6).

## 2.11 TESTABILITY

### 2.11.1 Self-Test

The Intel386 DX has the capability to perform a self-test. The self-test checks the function of all of the Control ROM and most of the non-random logic of the part. Approximately one-half of the Intel386 DX can be tested during self-test.

Self-Test is initiated on the Intel386 DX when the RESET pin transitions from HIGH to LOW, and the BUSY# pin is low. The self-test takes about 2**19 clocks, or approximately 26 milliseconds with a 20 MHz Intel386 DX. At the completion of self-test the processor performs reset and begins normal operation. The part has successfully passed self-test if the contents of the EAX register are zero (0). If the results of EAX are not zero then the self-test has detected a flaw in the part.

### 2.11.2 TLB Testing

The Intel386 DX provides a mechanism for testing the Translation Lookaside Buffer (TLB) if desired. This particular mechanism is unique to the Intel386 DX and may not be continued in the same way in future processors. When testing the TLB paging must be turned off (PG = 0 in CR0) to enable the TLB testing hardware and avoid interference with the test data being written to the TLB.

There are two TLB testing operations: 1) write entries into the TLB, and, 2) perform TLB lookups. Two Test Registers, shown in Figure 2-12, are provided for the purpose of testing. TR6 is the ''test command register'', and TR7 is the ''test data register''. The fields within these registers are defined below.

**C:** This is the command bit. For a write into TR6 to cause an immediate write into the TLB entry, write a 0 to this bit. For a write into TR6 to cause an immediate TLB lookup, write a 1 to this bit.

**Linear Address:** This is the tag field of the TLB. On a TLB write, a TLB entry is allocated to this linear address and the rest of that TLB entry is set per the value of TR7 and the value just written into TR6. On a TLB lookup, the TLB is interrogated per this value and if one and only one TLB entry matches, the rest of the fields of TR6 and TR7 are set from the matching TLB entry.

**Physical Address:** This is the data field of the TLB. On a write to the TLB, the TLB entry allocated to the linear address in TR6 is set to this value. On a TLB lookup, the data field (physical address) from the TLB is read out to here.

**PL:** On a TLB write, PL = 1 causes the REP field of TR7 to select which of four associative blocks of the TLB is to be written, but PL = 0 allows the internal pointer in the paging unit to select which TLB block is written. On a TLB lookup, the PL bit indicates whether the lookup was a hit (PL gets set to 1) or a miss (PL gets reset to 0).

**V:** The valid bit for this TLB entry. All valid bits can also be cleared by writing to CR3.

**D, D#:** The dirty bit for/from the TLB entry.

**U, U#:** The user bit for/from the TLB entry.

**W, W#:** The writable bit for/from the TLB entry.

For D, U and W, both the attribute and its complement are provided as tag bits, to permit the option of a ''don't care'' on TLB lookups. The meaning of these pairs of bits is given in the following table:

| X | X# | Effect During TLB Lookup | Value of Bit X after TLB Write |
|---|---|---|---|
| 0 | 0 | Miss All | Bit X Becomes Undefined |
| 0 | 1 | Match if X = 0 | Bit X Becomes 0 |
| 1 | 0 | Match if X = 1 | Bit X Becomes 1 |
| 1 | 1 | Match all | Bit X Becomes Undefined |

For writing a TLB entry:

1. Write TR7 for the desired physical address, PL and REP values.
2. Write TR6 with the appropriate linear address, etc. (be sure to write C = 0 for ''write'' command).

For looking up (reading) a TLB entry:

1. Write TR6 with the appropriate linear address (be sure to write C = 1 for ''lookup'' command).
2. Read TR7 and TR6. If the PL bit in TR7 indicates a hit, then the other values reveal the TLB contents. If PL indicates a miss, then the other values in TR7 and TR6 are indeterminate.

## 2.12 DEBUGGING SUPPORT

The Intel386 DX provides several features which simplify the debugging process. The three categories of on-chip debugging aids are:

1) the code execution breakpoint opcode (0CCH),

2) the single-step capability provided by the TF bit in the flag register, and

3) the code and data breakpoint capability provided by the Debug Registers DR0-3, DR6, and DR7.

| 31 … 12 | 11 | | | | | | | | | | | 0 | |
|---|---|---|---|---|---|---|---|---|---|---|---|---|---|
| LINEAR ADDRESS | V | D | D # | U | U # | W | W # | 0 | 0 | 0 | 0 | C | TR6 |
| PHYSICAL ADDRESS | 0 | 0 | 0 | 0 | 0 | 0 | 0 | P L | REP | | 0 | 0 | TR7 |

NOTE: 0 indicates Intel reserved: Do not define; SEE SECTION 2.3.10

**Figure 2-12. Test Registers**

## 2.12.1 Breakpoint Instruction

A single-byte-opcode breakpoint instruction is available for use by software debuggers. The breakpoint opcode is 0CCh, and generates an exception 3 trap when executed. In typical use, a debugger program can ''plant'' the breakpoint instruction at all desired code execution breakpoints. The single-byte breakpoint opcode is an alias for the two-byte general software interrupt instruction, INT n, where n=3. The only difference between INT 3 (0CCh) and INT n is that INT 3 is never IOPL-sensitive but INT n is IOPL-sensitive in Protected Mode and Virtual 8086 Mode.

## 2.12.2 Single-Step Trap

If the single-step flag (TF, bit 8) in the EFLAG register is found to be set at the end of an instruction, a single-step exception occurs. The single-step exception is auto vectored to exception number 1. Precisely, exception 1 occurs as a trap after the instruction following the instruction which set TF. In typical practice, a debugger sets the TF bit of a flag register image on the debugger's stack. It then typically transfers control to the user program and loads the flag image with a signal instruction, the IRET instruction. The single-step trap occurs after executing one instruction of the user program.

Since the exception 1 occurs as a trap (that is, it occurs after the instruction has already executed), the CS:EIP pushed onto the debugger's stack points to the next unexecuted instruction of the program being debugged. An exception 1 handler, merely by ending with an IRET instruction, can therefore efficiently support single-stepping through a user program.

## 2.12.3 Debug Registers

The Debug Registers are an advanced debugging feature of the Intel386 DX. They allow data access breakpoints as well as code execution breakpoints. Since the breakpoints are indicated by on-chip registers, an instruction execution breakpoint can be placed in ROM code or in code shared by several tasks, neither of which can be supported by the INT3 breakpoint opcode.

The Intel386 DX contains six Debug Registers, providing the ability to specify up to four distinct breakpoints addresses, breakpoint control options, and read breakpoint status. Initially after reset, breakpoints are in the disabled state. Therefore, no breakpoints will occur unless the debug registers are programmed. Breakpoints set up in the Debug Registers are autovectored to exception number 1.

### 2.12.3.1 LINEAR ADDRESS BREAKPOINT REGISTERS (DR0–DR3)

Up to four breakpoint addresses can be specified by writing into Debug Registers DR0–DR3, shown in Figure 2-13. The breakpoint addresses specified are 32-bit linear addresses. Intel386 DX hardware continuously compares the linear breakpoint addresses in DR0–DR3 with the linear addresses generated by executing software (a linear address is the result of computing the effective address and adding the 32-bit segment base address). Note that if paging is not enabled the linear address equals the physical address. If paging is enabled, the linear address is translated to a physical 32-bit address by the on-chip paging unit. Regardless of whether paging is enabled or not, however, the breakpoint registers hold linear addresses.

### 2.12.3.2 DEBUG CONTROL REGISTER (DR7)

A Debug Control Register, DR7 shown in Figure 2-13, allows several debug control functions such as enabling the breakpoints and setting up other control options for the breakpoints. The fields within the Debug Control Register, DR7, are as follows:

LENi (breakpoint length specification bits)

A 2-bit LEN field exists for each of the four breakpoints. LEN specifies the length of the associated breakpoint field. The choices for data breakpoints are: 1 byte, 2 bytes, and 4 bytes. Instruction execu-

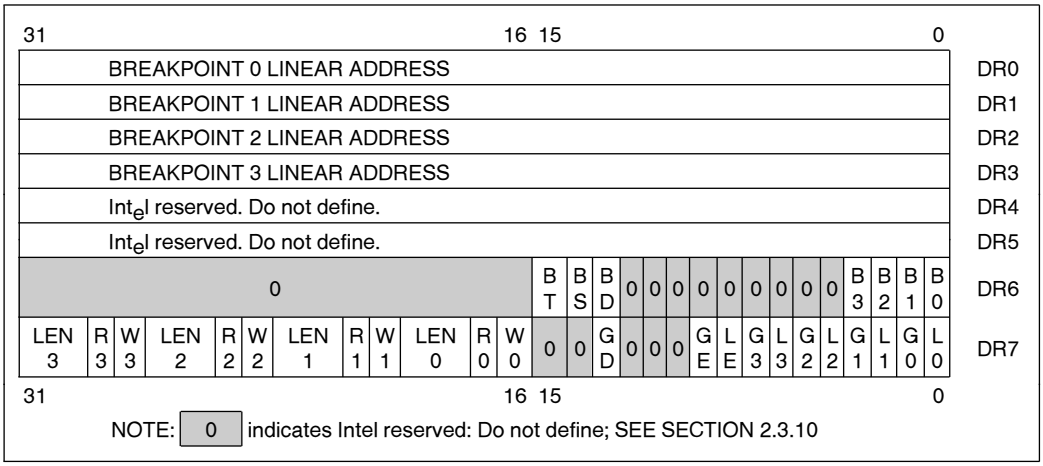


**Figure 2-13. Debug Registers**

tion breakpoints must have a length of 1 (LENi = 00). Encoding of the LENi field is as follows:

| LENi Encoding | Breakpoint Field Width | Usage of Least Significant Bits in Breakpoint Address Register i, (i = 0 − 3) |
|---|---|---|
| 00 | 1 byte | All 32-bits used to specify a single-byte breakpoint field. |
| 01 | 2 bytes | A1 – A31 used to specify a two-byte, word-aligned breakpoint field. A0 in Breakpoint Address Register is not used. |
| 10 | Undefined— do not use this encoding | |
| 11 | 4 bytes | A2 – A31 used to specify a four-byte, dword-aligned breakpoint field. A0 and A1 in Breakpoint Address Register are not used. |

The LENi field controls the size of breakpoint field i by controlling whether all low-order linear address bits in the breakpoint address register are used to detect the breakpoint event. Therefore, all breakpoint fields are aligned; 2-byte breakpoint fields begin on Word boundaries, and 4-byte breakpoint fields begin on Dword boundaries.

The following is an example of various size breakpoint fields. Assume the breakpoint linear address in DR2 is 00000005H. In that situation, the following illustration indicates the region of the breakpoint field for lengths of 1, 2, or 4 bytes.

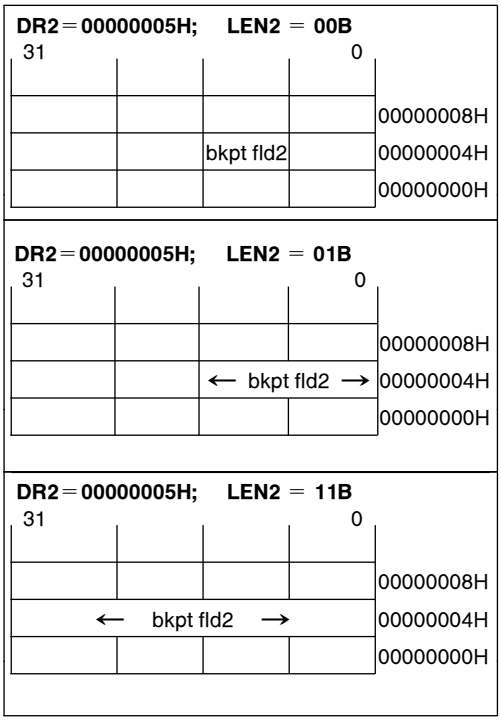

RWi (memory access qualifier bits)

A 2-bit RW field exists for each of the four breakpoints. The 2-bit RW field specifies the type of usage which must occur in order to activate the associated breakpoint.

| RW Encoding | Usage Causing Breakpoint |
|---|---|
| 00 | Instruction execution only |
| 01 | Data writes only |
| 10 | Undefined—do not use this encoding |
| 11 | Data reads and writes only |

RW encoding 00 is used to set up an instruction execution breakpoint. RW encodings 01 or 11 are used to set up write-only or read/write data breakpoints.

Note that **instruction execution breakpoints are taken as faults** (i.e. before the instruction executes), but **data breakpoints are taken as traps** (i.e. after the data transfer takes place).

Using LENi and RWi to Set Data Breakpoint i

A data breakpoint can be set up by writing the linear address into DRi (i = 0–3). For data breakpoints, RWi can = 01 (write-only) or 11 (write/read). LEN can = 00, 01, or 11.

If a data access entirely or partly falls within the data breakpoint field, the data breakpoint condition has occurred, and if the breakpoint is enabled, an exception 1 trap will occur.

Using LENi and RWi to Set Instruction Execution Breakpoint i

An instruction execution breakpoint can be set up by writing address of the beginning of the instruction (including prefixes if any) into DRi (i = 0–3). RWi must = 00 and LEN must = 00 for instruction execution breakpoints.

If the instruction beginning at the breakpoint address is about to be executed, the instruction execution breakpoint condition has occurred, and if the breakpoint is enabled, an exception 1 fault will occur before the instruction is executed.

Note that an instruction execution breakpoint address must be equal to the **beginning** byte address of an instruction (including prefixes) in order for the instruction execution breakpoint to occur.

GD (Global Debug Register access detect)

The Debug Registers can only be accessed in Real Mode or at privilege level 0 in Protected Mode. The GD bit, when set, provides extra protection against **any** Debug Register access even in Real Mode or at privilege level 0 in Protected Mode. This additional protection feature is provided to guarantee that a software debugger (or ICE™-386) can have full control over the Debug Register resources when required. The GD bit, when set, causes an exception 1 fault if an instruction attempts to read or write any Debug Register. The GD bit is then automatically cleared when the exception 1 handler is invoked, allowing the exception 1 handler free access to the debug registers.

GE and LE (Exact data breakpoint match, global and local)

If either GE or LE is set, any data breakpoint trap will be reported exactly after completion of the instruction that caused the operand transfer. Exact reporting is provided by forcing the Intel386 DX execution unit to wait for completion of data operand transfers before beginning execution of the next instruction.

If exact data breakpoint match is not selected, data breakpoints may not be reported until several instructions later or may not be reported at all. When enabling a data breakpoint, it is therefore recommended to enable the exact data breakpoint match.

When the Intel386 DX performs a task switch, the LE bit is cleared. Thus, the LE bit supports fast task switching out of tasks, that have enabled the exact data breakpoint match for their task-local breakpoints. The LE bit is cleared by the processor during a task switch, to avoid having exact data breakpoint match enabled in the new task. Note that exact data breakpoint match must be re-enabled under software control.

The Intel386 DX GE bit is unaffected during a task switch. The GE bit supports exact data breakpoint match that is to remain enabled during all tasks executing in the system.

Note that **instruction execution** breakpoints are always reported exactly, whether or not exact data breakpoint match is selected.

Gi and Li (breakpoint enable, global and local)

If either Gi or Li is set then the associated breakpoint (as defined by the linear address in DRi, the length in LENi and the usage criteria in RWi) is enabled. If either Gi or Li is set, and the Intel386 DX detects the ith breakpoint condition, then the exception 1 handler is invoked.

When the Intel386 DX performs a task switch to a new Task State Segment (TSS), all Li bits are cleared. Thus, the Li bits support fast task switching out of tasks that use some task-local breakpoint

registers. The Li bits are cleared by the processor during a task switch, to avoid spurious exceptions in the new task. Note that the breakpoints must be re-enabled under software control.

All Intel386 DX Gi bits are unaffected during a task switch. The Gi bits support breakpoints that are active in all tasks executing in the system.

#### 2.12.3.3 DEBUG STATUS REGISTER (DR6)

A Debug Status Register, DR6 shown in Figure 2-13, allows the exception 1 handler to easily determine why it was invoked. Note the exception 1 handler can be invoked as a result of one of several events:

1) DR0 Breakpoint fault/trap.
2) DR1 Breakpoint fault/trap.
3) DR2 Breakpoint fault/trap.
4) DR3 Breakpoint fault/trap.
5) Single-step (TF) trap.
6) Task switch trap.
7) Fault due to attempted debug register access when GD = 1.

The Debug Status Register contains single-bit flags for each of the possible events invoking exception 1. Note below that some of these events are faults (exception taken before the instruction is executed), while other events are traps (exception taken after the debug events occurred).

The flags in DR6 are set by the hardware but never cleared by hardware. Exception 1 handler software should clear DR6 before returning to the user program to avoid future confusion in identifying the source of exception 1.

The fields within the Debug Status Register, DR6, are as follows:

Bi (debug fault/trap due to breakpoint 0–3)

Four breakpoint indicator flags, B0–B3, correspond one-to-one with the breakpoint registers in DR0–DR3. A flag Bi is set when the condition described by DRi, LENi, and RWi occurs.

If Gi or Li is set, and if the ith breakpoint is detected, the processor will invoke the exception 1 handler. The exception is handled as a fault if an instruction execution breakpoint occurred, or as a trap if a data breakpoint occurred.

**IMPORTANT NOTE:** A flag Bi is set whenever the hardware detects a match condition on **enabled** breakpoint i. Whenever a match is detected on at least one **enabled** breakpoint i, the hardware immediately sets all Bi bits corresponding to breakpoint conditions matching at that instant, whether enabled **or not.** Therefore, the exception 1 handler may see that multiple Bi bits are set, but only set Bi bits corresponding to **enabled** breakpoints (Li or Gi set) are **true** indications of why the exception 1 handler was invoked.

BD (debug fault due to attempted register access when GD bit set)

This bit is set if the exception 1 handler was invoked due to an instruction attempting to read or write to the debug registers when GD bit was set. If such an event occurs, then the GD bit is automatically cleared when the exception 1 handler is invoked, allowing handler access to the debug registers.

BS (debug trap due to single-step)

This bit is set if the exception 1 handler was invoked due to the TF bit in the flag register being set (for single-stepping). See section 2.12.2.

BT (debug trap due to task switch)

This bit is set if the exception 1 handler was invoked due to a task switch occurring to a task having an Intel386 DX TSS with the T bit set. (See Figure 4-15a). Note the task switch into the new task occurs normally, but before the first instruction of the task is executed, the exception 1 handler is invoked. With respect to the task switch operation, the operation is considered to be a trap.

#### 2.12.3.4 USE OF RESUME FLAG (RF) IN FLAG REGISTER

The Resume Flag (RF) in the flag word can suppress an instruction execution breakpoint when the exception 1 handler returns to a user program at a user address which is also an instruction execution breakpoint. See section 2.3.3.

# 3. REAL MODE ARCHITECTURE

## 3.1 REAL MODE INTRODUCTION

When the processor is reset or powered up it is initialized in Real Mode. Real Mode has the same base architecture as the 8086, but allows access to the 32-bit register set of the Intel386 DX. The addressing mechanism, memory size, interrupt handling, are all identical to the Real Mode on the 80286.

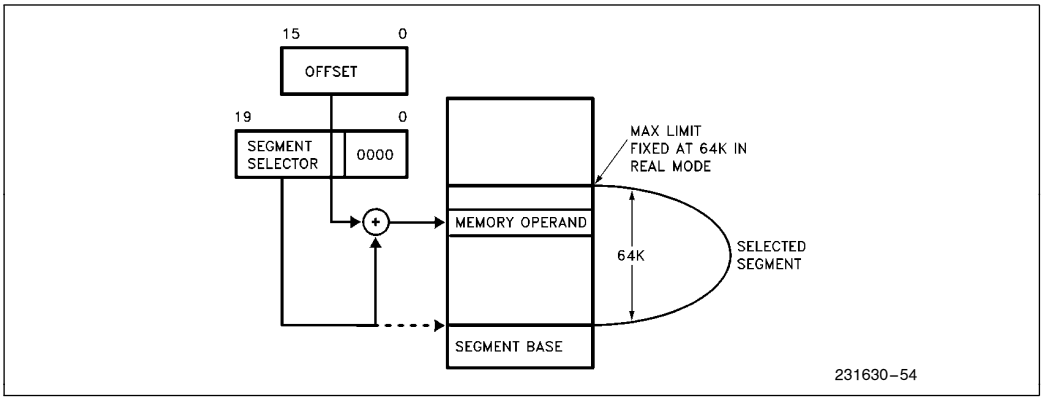


**Figure 3-1. Real Address Mode Addressing**

All of the Intel386 DX instructions are available in Real Mode (except those instructions listed in 4.6.4). The default operand size in Real Mode is 16-bits, just like the 8086. In order to use the 32-bit registers and addressing modes, override prefixes must be used. In addition, the segment size on the Intel386 DX in Real Mode is 64K bytes so 32-bit effective addresses must have a value less the 0000FFFFH. The primary purpose of Real Mode is to set up the processor for Protected Mode Operation.

The LOCK prefix on the Intel386 DX, even in Real Mode, is more restrictive than on the 80286. This is due to the addition of paging on the Intel386 DX in Protected Mode and Virtual 8086 Mode. Paging makes it impossible to guarantee that repeated string instructions can be LOCKed. The Intel386 DX can't require that all pages holding the string be physically present in memory. Hence, a Page Fault (exception 14) might have to be taken during the repeated string instruction. Therefore the LOCK prefix can't be supported during repeated string instructions.

These are the only instruction forms where the LOCK prefix is legal on the Intel386 DX:

| Opcode | Operands (Dest, Source) |
|---|---|
| BIT Test and SET/RESET/COMPLEMENT | Mem, Reg/immed |
| XCHG | Reg, Mem |
| XCHG | Mem, Reg |
| ADD, OR, ADC, SBB, AND, SUB, XOR | Mem, Reg/immed |
| NOT, NEG, INC, DEC | Mem |

An exception 6 will be generated if a LOCK prefix is placed before any instruction form or opcode not listed above. The LOCK prefix allows indivisible read/modify/write operations on memory operands using the instructions above. For example, even the ADD Reg, Mem is not LOCKable, because the Mem operand is not the destination (and therefore no memory read/modify/operation is being performed).

Since, on the Intel386 DX, repeated string instructions are not LOCKable, it is not possible to LOCK the bus for a long period of time. Therefore, the LOCK prefix is not IOPL-sensitive on the Intel386 DX. The LOCK prefix can be used at any privilege level, but only on the instruction forms listed above.

## 3.2 MEMORY ADDRESSING

In Real Mode the maximum memory size is limited to 1 megabyte. Thus, only address lines A2–A19 are active. (Exception, the high address lines A20–A31 are high during CS-relative memory cycles until an intersegment jump or call is executed (see section 2.10)).

Since paging is not allowed in Real Mode the linear addresses are the same as physical addresses. Physical addresses are formed in Real Mode by adding the contents of the appropriate segment register which is shifted left by four bits to an effective address. This addition results in a physical address from 00000000H to 0010FFEFH. This is compatible with 80286 Real Mode. Since segment registers are shifted left by 4 bits this implies that Real Mode segments always start on 16 byte boundaries.

All segments in Real Mode are exactly 64K bytes long, and may be read, written, or executed. The Intel386 DX will generate an exception 13 if a data operand or instruction fetch occurs past the end of a segment. (i.e. if an operand has an offset greater than FFFFH, for example a word with a low byte at FFFFH and the high byte at 0000H.)

Segments may be overlapped in Real Mode. Thus, if a particular segment does not use all 64K bytes another segment can be overlayed on top of the unused portion of the previous segment. This allows the programmer to minimize the amount of physical memory needed for a program.

## 3.3 RESERVED LOCATIONS

There are two fixed areas in memory which are reserved in Real address mode: system initialization area and the interrupt table area. Locations 00000H through 003FFH are reserved for interrupt vectors. Each one of the 256 possible interrupts has a 4-byte jump vector reserved for it. Locations FFFFFFF0H through FFFFFFFFH are reserved for system initialization.

## 3.4 INTERRUPTS

Many of the exceptions shown in Table 2-5 and discussed in section 2.9 are not applicable to Real Mode operation, in particular exceptions 10, 11, 14, will not happen in Real Mode. Other exceptions have slightly different meanings in Real Mode; Table 3-1 identifies these exceptions.

## 3.5 SHUTDOWN AND HALT

The HLT instruction stops program execution and prevents the processor from using the local bus until restarted. Either NMI, INTR with interrupts enabled (IF = 1), or RESET will force the Intel386 DX out of halt. If interrupted, the saved CS:IP will point to the next instruction after the HLT.

Shutdown will occur when a severe error is detected that prevents further processing. In Real Mode, shutdown can occur under two conditions:

An interrupt or an exception occur (Exceptions 8 or 13) and the interrupt vector is larger than the Interrupt Descriptor Table (i.e. There is not an interrupt handler for the interrupt).

A CALL, INT or PUSH instruction attempts to wrap around the stack segment when SP is not even. (e.g. pushing a value on the stack when SP = 0001 resulting in a stack segment greater than FFFFH)

An NMI input can bring the processor out of shutdown if the Interrupt Descriptor Table limit is large enough to contain the NMI interrupt vector (at least 0017H) and the stack has enough room to contain the vector and flag information (i.e. SP is greater than 0005H). Otherwise shutdown can only be exited via the RESET input.

# 4. PROTECTED MODE ARCHITECTURE

## 4.1 INTRODUCTION

The complete capabilities of the Intel386 DX are unlocked when the processor operates in Protected Virtual Address Mode (Protected Mode). Protected Mode vastly increases the linear address space to four gigabytes ($2^{32}$ bytes) and allows the running of virtual memory programs of almost unlimited size (64 terabytes or $2^{46}$ bytes). In addition Protected Mode allows the Intel386 DX to run all of the existing 8086 and 80286 software, while providing a sophisticated memory management and a hardware-assisted protection mechanism. Protected Mode allows the use of additional instructions especially optimized for supporting multitasking operating systems. The base architecture of the Intel386 DX remains the same, the registers, instructions, and addressing modes described in the previous sections are retained. The main difference between Protected Mode, and Real Mode from a programmer's view is the increased address space, and a different addressing mechanism.

**Table 3-1**

| Function | Interrupt Number | Related Instructions | Return Address Location |
|---|---|---|---|
| Interrupt table limit too small | 8 | INT Vector is not within table limit | Before Instruction |
| CS, DS, ES, FS, GS Segment overrun exception | 13 | Word memory reference beyond offset = FFFFH. An attempt to execute past the end of CS segment. | Before Instruction |
| SS Segment overrun exception | 12 | Stack Reference beyond offset = FFFFH | Before Instruction |

## 4.2 ADDRESSING MECHANISM

Like Real Mode, Protected Mode uses two components to form the logical address, a 16-bit selector is used to determine the linear base address of a segment, the base address is added to a 32-bit effective address to form a 32-bit linear address. The linear address is then either used as the 32-bit physical address, or if paging is enabled the paging mechanism maps the 32-bit linear address into a 32-bit physical address.

The difference between the two modes lies in calculating the base address. In Protected Mode the selector is used to specify an index into an operating system defined table (see Figure 4-1). The table contains the 32-bit base address of a given segment. The physical address is formed by adding the base address obtained from the table to the offset.

Paging provides an additional memory management mechanism which operates only in Protected Mode. Paging provides a means of managing the very large segments of the Intel386 DX. As such, paging operates beneath segmentation. The paging mechanism translates the protected linear address which comes from the segmentation unit into a physical address. Figure 4-2 shows the complete Intel386 DX addressing mechanism with paging enabled.

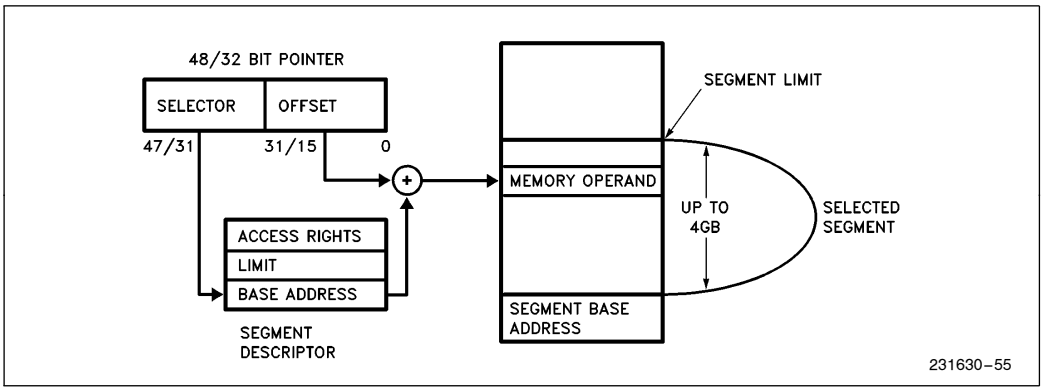


**Figure 4-1. Protected Mode Addressing**

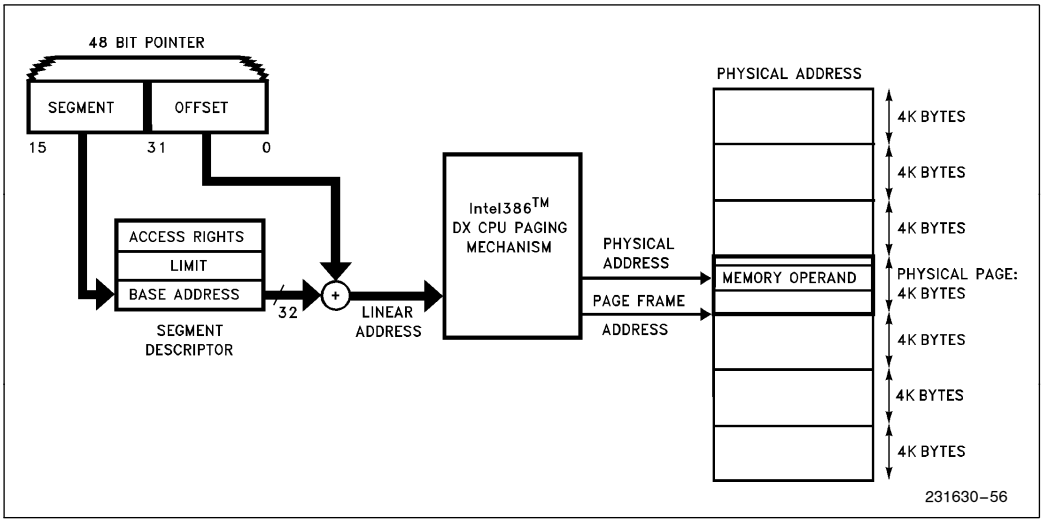


**Figure 4-2. Paging and Segmentation**

## 4.3 SEGMENTATION

### 4.3.1 Segmentation Introduction

Segmentation is one method of memory management. Segmentation provides the basis for protection. Segments are used to encapsulate regions of memory which have common attributes. For example, all of the code of a given program could be contained in a segment, or an operating system table may reside in a segment. All information about a segment is stored in an 8 byte data structure called a descriptor. All of the descriptors in a system are contained in tables recognized by hardware.

### 4.3.2 Terminology

The following terms are used throughout the discussion of descriptors, privilege levels and protection:

**PL:** Privilege Level—One of the four hierarchical privilege levels. Level 0 is the most privileged level and level 3 is the least privileged. More privileged levels are numerically smaller than less privileged levels.

**RPL:** Requestor Privilege Level—The privilege level of the original supplier of the selector. RPL is determined by the **least two** significant bits of a selector.

**DPL:** Descriptor Privilege Level—This is the least privileged level at which a task may access that descriptor (and the segment associated with that descriptor). Descriptor Privilege Level is determined by bits 6:5 in the Access Right Byte of a descriptor.

**CPL:** Current Privilege Level—The privilege level at which a task is currently executing, which equals the privilege level of the code segment being executed. CPL can also be determined by examining the lowest 2 bits of the CS register, except for conforming code segments.

**EPL:** Effective Privilege Level—The effective privilege level is the least privileged of the RPL and DPL. Since smaller privilege level **values** indicate greater privilege, EPL is the numerical maximum of RPL and DPL.

**Task:** One instance of the execution of a program. Tasks are also referred to as processes.

### 4.3.3 Descriptor Tables

#### 4.3.3.1 DESCRIPTOR TABLES INTRODUCTION

The descriptor tables define all of the segments which are used in an Intel386 DX system. There are three types of tables on the Intel386 DX which hold descriptors: the Global Descriptor Table, Local Descriptor Table, and the Interrupt Descriptor Table. All of the tables are variable length memory arrays. They can range in size between 8 bytes and 64K bytes. Each table can hold up to 8192 8 byte descriptors. The upper 13 bits of a selector are used as an index into the descriptor table. The tables have registers associated with them which hold the 32-bit linear base address, and the 16-bit limit of each table.

Each of the tables has a register associated with it the GDTR, LDTR, and the IDTR (see Figure 4-3). The LGDT, LLDT, and LIDT instructions, load the base and limit of the Global, Local, and Interrupt Descriptor Tables, respectively, into the appropriate register. The SGDT, SLDT, and SIDT instructions store the base and limit values. These tables are manipulated by the operating system. Therefore, the load descriptor table instructions are privileged instructions.

#### 4.3.3.2 GLOBAL DESCRIPTOR TABLE

The Global Descriptor Table (GDT) contains descriptors which are possibly available to all of the tasks in a system. The GDT can contain any type of segment descriptor except for descriptors which are used for servicing interrupts (i.e. interrupt and trap descriptors). Every Intel386 DX system contains a

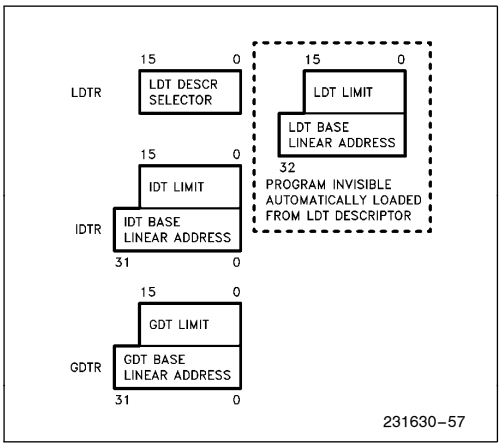


**Figure 4-3. Descriptor Table Registers**

GDT. Generally the GDT contains code and data segments used by the operating systems and task state segments, and descriptors for the LDTs in a system.

The first slot of the Global Descriptor Table corresponds to the null selector and is not used. The null selector defines a null pointer value.

#### 4.3.3.3 LOCAL DESCRIPTOR TABLE

LDTs contain descriptors which are associated with a given task. Generally, operating systems are designed so that each task has a separate LDT. The LDT may contain only code, data, stack, task gate, and call gate descriptors. LDTs provide a mechanism for isolating a given task's code and data segments from the rest of the operating system, while the GDT contains descriptors for segments which are common to all tasks. A segment cannot be accessed by a task if its segment descriptor does not exist in either the current LDT or the GDT. This provides both isolation and protection for a task's segments, while still allowing global data to be shared among tasks.

Unlike the 6 byte GDT or IDT registers which contain a base address and limit, the visible portion of the LDT register contains only a 16-bit selector. This selector refers to a Local Descriptor Table descriptor in the GDT.

#### 4.3.3.4 INTERRUPT DESCRIPTOR TABLE

The third table needed for Intel386 DX systems is the Interrupt Descriptor Table. (See Figure 4-4.) The IDT contains the descriptors which point to the location of up to 256 interrupt service routines. The IDT may contain only task gates, interrupt gates, and trap gates. The IDT should be at least 256 bytes in size in order to hold the descriptors for the 32 Intel Reserved Interrupts. Every interrupt used by a system must have an entry in the IDT. The IDT entries are referenced via INT instructions, external interrupt vectors, and exceptions. (See 2.9 **Interrupts).**

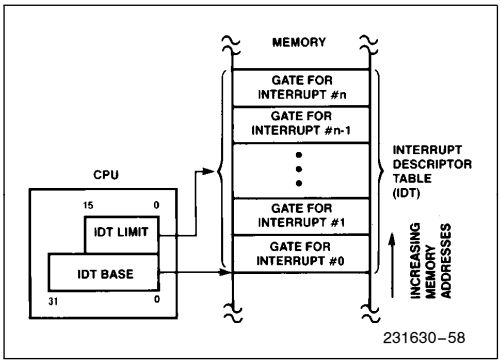


**Figure 4-4. Interrupt Descriptor Table Register Use**

## 4.3.4 Descriptors

#### 4.3.4.1 DESCRIPTOR ATTRIBUTE BITS

The object to which the segment selector points to is called a descriptor. Descriptors are eight byte quantities which contain attributes about a given region of linear address space (i.e. a segment). These attributes include the 32-bit base linear address of the segment, the 20-bit length and granularity of the segment, the protection level, read, write or execute privileges, the default size of the operands (16-bit or

| 31 | | | | | | | | | | | 0 | BYTE ADDRESS |
|---|---|---|---|---|---|---|---|---|---|---|---|---|
| SEGMENT BASE 15 . . . 0 | | | | | | SEGMENT LIMIT 15 . . . 0 | | | | | | 0 |
| BASE 31 . . . 24 | G | D | 0 | AVL | LIMIT 19 . . . 16 | P | DPL | S | TYPE | A | BASE 23 . . . 16 | +4 |

BASE Base Address of the segment
LIMIT The length of the segment
P Present Bit 1 = Present 0 = Not Present
DPL Descriptor Privilege Level 0–3
S Segment Descriptor 0 = System Descriptor 1 = Code or Data Segment Descriptor
TYPE Type of Segment
A Accessed Bit
G Granularity Bit 1 = Segment length is page granular 0 = Segment length is byte granular
D Default Operation Size (recognized in code segment descriptors only) 1 = 32-bit segment 0 = 16-bit segment
0 Bit must be zero (0) for compatibility with future processors
AVL Available field for user or OS

**NOTE:**
In a maximum-size segment (ie. a segment with G = 1 and segment limit 19...0 = FFFFFH), the lowest 12 bits of the segment base should be zero (ie. segment base 11...000 = 000H).

**Figure 4-5. Segment Descriptors**

32-bit), and the type of segment. All of the attribute information about a segment is contained in 12 bits in the segment descriptor. Figure 4-5 shows the general format of a descriptor. All segments on the Intel386 DX have three attribute fields in common: the **P** bit, the **DPL** bit, and the **S** bit. The Present **P** bit is 1 if the segment is loaded in physical memory, if P = 0 then any attempt to access this segment causes a not present exception (exception 11). The Descriptor Privilege Level **DPL** is a two-bit field which specifies the protection level 0–3 associated with a segment.

The Intel386 DX has two main categories of segments system segments and non-system segments (for code and data). The segment **S** bit in the segment descriptor determines if a given segment is a system segment or a code or data segment. If the S bit is 1 then the segment is either a code or data segment, if it is 0 then the segment is a system segment.

#### 4.3.4.2 Intel386™ DX CODE, DATA DESCRIPTORS (S = 1)

Figure 4-6 shows the general format of a code and data descriptor and Table 4-1 illustrates how the bits in the Access Rights Byte are interpreted.

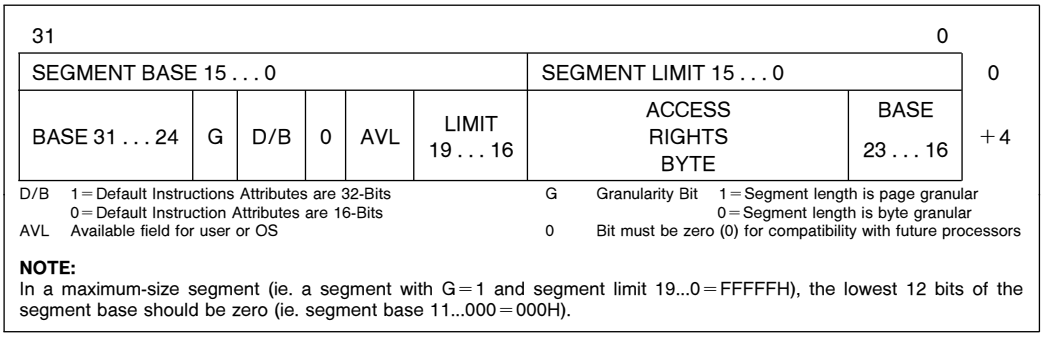


**NOTE:**
In a maximum-size segment (ie. a segment with G = 1 and segment limit 19...0 = FFFFFH), the lowest 12 bits of the segment base should be zero (ie. segment base 11...000 = 000H).

**Figure 4-6. Segment Descriptors**

**Table 4-1. Access Rights Byte Definition for Code and Data Descriptions**

| | Bit Position | Name | Function | | |
|---|---|---|---|---|---|
| | 7 | Present (P) | P = 1 | Segment is mapped into physical memory. | |
| | | | P = 0 | No mapping to physical memory exits, base and limit are not used. | |
| | 6–5 | Descriptor Privilege Level (DPL) | | Segment privilege attribute used in privilege tests. | |
| | 4 | Segment Descriptor (S) | S = 1 | Code or Data (includes stacks) segment descriptor | |
| | | | S = 0 | System Segment Descriptor or Gate Descriptor | |
| Type Field Definition | 3 | Executable (E) | E = 0 | Descriptor type is data segment: | If Data Segment (S = 1, E = 0) |
| | 2 | Expansion Direction (ED) | ED 0 | Expand up segment, offsets must be ≤ limit. | |
| | | | ED = 1 | Expand down segment, offsets must be > limit. | |
| | 1 | Writeable (W) | W = 0 | Data segment may not be written into. | |
| | | | W = 1 | Data segment may be written into. | |
| | 3 | Executable (E) | E = 1 | Descriptor type is code segment: | If Code Segment (S = 1, E = 1) |
| | 2 | Conforming (C) | C = 1 | Code segment may only be executed when CPL ≥ DPL and CPL remains unchanged. | |
| | 1 | Readable (R) | R = 0 | Code segment may not be read. | |
| | | | R = 1 | Code segment may be read. | |
| | 0 | Accessed (A) | A = 0 | Segment has not been accessed. | |
| | | | A = 1 | Segment selector has been loaded into segment register or used by selector test instructions. | |

Code and data segments have several descriptor fields in common. The accessed **A** bit is set whenever the processor accesses a descriptor. The **A** bit is used by operating systems to keep usage statistics on a given segment. The **G** bit, or granularity bit, specifies if a segment length is byte-granular or page-granular. Intel386 DX segments can be one megabyte long with byte granularity (G = 0) or four gigabytes with page granularity (G = 1), (i.e., $2^{20}$ pages each page is 4K bytes in length). The granularity is totally unrelated to paging. An Intel386 DX system can consist of segments with byte granularity, and page granularity, whether or not paging is enabled.

The executable **E** bit tells if a segment is a code or data segment. A code segment (E = 1, S = 1) may be execute-only or execute/read as determined by the Read **R** bit. Code segments are execute only if R = 0, and execute/read if R = 1. Code segments may never be written into.

**NOTE:**
Code segments may be modified via aliases. Aliases are writeable data segments which occupy the same range of linear address space as the code segment.

The **D** bit indicates the default length for operands and effective addresses. If D = 1 then 32-bit operands and 32-bit addressing modes are assumed. If D = 0 then 16-bit operands and 16-bit addressing modes are assumed. Therefore all existing 80286 code segments will execute on the Intel386 DX assuming the D bit is set 0.

Another attribute of code segments is determined by the conforming **C** bit. Conforming segments, C = 1, can be executed and shared by programs at different privilege levels. (See section 4.4 **Protection**.)

Segments identified as data segments (E = 0, S = 1) are used for two types of Intel386 DX segments: stack and data segments. The expansion direction **(ED)** bit specifies if a segment expands downward (stack) or upward (data). If a segment is a stack segment all offsets must be greater than the segment limit. On a data segment all offsets must be less than or equal to the limit. In other words, stack segments start at the base linear address plus the maximum segment limit and grow down to the base linear address plus the limit. On the other hand, data segments start at the base linear address and expand to the base linear address plus limit.

The write **W** bit controls the ability to write into a segment. Data segments are read-only if W = 0. The stack segment must have W = 1.

The **B** bit controls the size of the stack pointer register. If B = 1, then PUSHes, POPs, and CALLs all use the 32-bit ESP register for stack references and assume an upper limit of FFFFFFFFH. If B = 0, stack instructions all use the 16-bit SP register and assume an upper limit of FFFFH.

#### 4.3.4.3 SYSTEM DESCRIPTOR FORMATS

System segments describe information about operating system tables, tasks, and gates. Figure 4-7 shows the general format of system segment descriptors, and the various types of system segments. Intel386 DX system descriptors contain a 32-bit base linear address and a 20-bit segment limit. 80286 system descriptors have a 24-bit base address and a 16-bit segment limit. 80286 system descriptors are identified by the upper 16 bits being all zero.

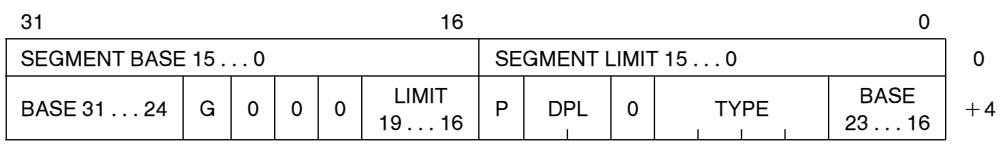


| Type | Defines | Type | Defines |
|---|---|---|---|
| 0 | Invalid | 8 | Invalid |
| 1 | Available 80286 TSS | 9 | Available Intel386™ DX TSS |
| 2 | LDT | A | Undefined (Intel Reserved) |
| 3 | Busy 80286 TSS | B | Busy Intel386™ DX TSS |
| 4 | 80286 Call Gate | C | Intel386™ DX Call Gate |
| 5 | Task Gate (for 80286 or Intel386™ DX Task) | D | Undefined (Intel Reserved) |
| 6 | 80286 Interrupt Gate | E | Intel386™ DX Interrupt Gate |
| 7 | 80286 Trap Gate | F | Intel386™ DX Trap Gate |

**NOTE:**
In a maximum-size segment (ie. a segment with G = 1 and segment limit 19...0 = FFFFFH), the lowest 12 bits of the segment base should be zero (ie. segment base 11...000 = 000H).

**Figure 4-7. System Segments Descriptors**

#### 4.3.4.4 LDT DESCRIPTORS (S = 0, TYPE = 2)

LDT descriptors (S = 0 TYPE = 2) contain information about Local Descriptor Tables. LDTs contain a table of segment descriptors, unique to a particular task. Since the instruction to load the LDTR is only available at privilege level 0, the DPL field is ignored. LDT descriptors are only allowed in the Global Descriptor Table (GDT).

#### 4.3.4.5 TSS DESCRIPTORS (S = 0, TYPE = 1, 3, 9, B)

A Task State Segment (TSS) descriptor contains information about the location, size, and privilege level of a Task State Segment (TSS). A TSS in turn is a special fixed format segment which contains all the state information for a task and a linkage field to permit nesting tasks. The TYPE field is used to indicate whether the task is currently BUSY (i.e. on a chain of active tasks) or the TSS is available. The TYPE field also indicates if the segment contains a 80286 or an Intel386 DX TSS. The Task Register (TR) contains the selector which points to the current Task State Segment.

#### 4.3.4.6 GATE DESCRIPTORS (S = 0, TYPE = 4–7, C, F)

Gates are used to control access to entry points within the target code segment. The various types of gate descriptors are **call** gates, **task** gates, **interrupt** gates, and **trap** gates. Gates provide a level of indirection between the source and destination of the control transfer. This indirection allows the processor to automatically perform protection checks. It also allows system designers to control entry points to the operating system. Call gates are used to change privilege levels (see section 4.4 **Protection**), task gates are used to perform a task switch, and interrupt and trap gates are used to specify interrupt service routines.

Figure 4-8 shows the format of the four types of gate descriptors. Call gates are primarily used to transfer program control to a more privileged level. The call gate descriptor consists of three fields: the access byte, a long pointer (selector and offset) which points to the start of a routine and a word count which specifies how many parameters are to be copied from the caller's stack to the stack of the called routine. The word count field is only used by call gates when there is a change in the privilege level, other types of gates ignore the word count field.

Interrupt and trap gates use the destination selector and destination offset fields of the gate descriptor as a pointer to the start of the interrupt or trap handler routines. The difference between interrupt gates and trap gates is that the interrupt gate disables interrupts (resets the IF bit) while the trap gate does not.

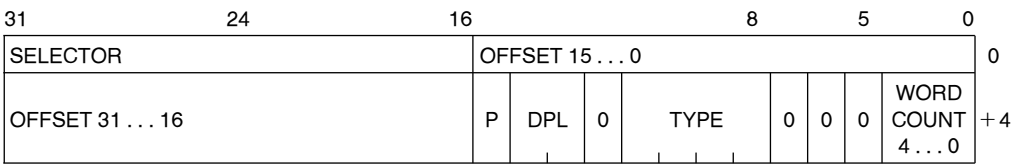


**Gate Descriptor Fields**

| Name | Value | Description |
|---|---|---|
| Type | 4 | 80286 call gate |
| | 5 | Task gate (for 80286 or Intel386™ DX task) |
| | 6 | 80286 interrupt gate |
| | 7 | 80286 trap gate |
| | C | Intel386™ DX call gate |
| | E | Intel386™ DX interrupt gate |
| | F | Intel386™ DX trap gate |
| P | 0 | Descriptor contents are not valid |
| | 1 | Descriptor contents are valid |

DPL—least privileged level at which a task may access the gate. WORD COUNT 0–31—the number of parameters to copy from caller's stack to the called procedure's stack. The parameters are 32-bit quantities for Intel386™ DX gates, and 16-bit quantities for 80286 gates.

| | | |
|---|---|---|
| DESTINATION SELECTOR | 16-bit selector | Selector to the target code segment or Selector to the target task state segment for task gate |
| DESTINATION OFFSET | offset<br>16-bit 80286<br>32-bit Intel386™ DX | Entry point within the target code segment |

**Figure 4-8. Gate Descriptor Formats**

Task gates are used to switch tasks. Task gates may only refer to a task state segment (see section 4.4.6 **Task Switching**) therefore only the destination selector portion of a task gate descriptor is used, and the destination offset is ignored.

Exception 13 is generated when a destination selector does not refer to a correct descriptor type, i.e., a code segment for an interrupt, trap or call gate, a TSS for a task gate.

The access byte format is the same for all gate descriptors. P = 1 indicates that the gate contents are valid. P = 0 indicates the contents are not valid and causes exception 11 if referenced. DPL is the descriptor privilege level and specifies when this descriptor may be used by a task (see section 4.4 **Protection**). The S field, bit 4 of the access rights byte, must be 0 to indicate a system control descriptor. The type field specifies the descriptor type as indicated in Figure 4-8.

#### 4.3.4.7 DIFFERENCES BETWEEN Intel386™ DX AND 80286 DESCRIPTORS

In order to provide operating system compatibility between the 80286 and Intel386 DX, the Intel386 DX supports all of the 80286 segment descriptors. Figure 4-9 shows the general format of an 80286 system segment descriptor. The only differences between 80286 and Intel386 DX descriptor formats are that the values of the type fields, and the limit and base address fields have been expanded for the Intel386 DX. The 80286 system segment descriptors contained a 24-bit base address and 16-bit limit, while the Intel386 DX system segment descriptors have a 32-bit base address, a 20-bit limit field, and a granularity bit.

By supporting 80286 system segments the Intel386 DX is able to execute 80286 application programs on an Intel386 DX operating system. This is possible because the processor automatically understands which descriptors are 80286-style descriptors and which descriptors are Intel386 DX-style descriptors. In particular, if the upper word of a descriptor is zero, then that descriptor is a 80286-style descriptor.

The only other differences between 80286-style descriptors and Intel386 DX descriptors is the interpretation of the word count field of call gates and the B bit. The word count field specifies the number of 16-bit quantities to copy for 80286 call gates and 32-bit quantities for Intel386 DX call gates. The B bit controls the size of PUSHes when using a call gate; if B = 0 PUSHes are 16 bits, if B = 1 PUSHes are 32 bits.

#### 4.3.4.8 SELECTOR FIELDS

A selector in Protected Mode has three fields: Local or Global Descriptor Table Indicator (TI), Descriptor Entry Index (Index), and Requestor (the selector's) Privilege Level (RPL) as shown in Figure 4-10. The TI bits select one of two memory-based tables of descriptors (the Global Descriptor Table or the Local Descriptor Table). The Index selects one of 8K descriptors in the appropriate descriptor table. The RPL bits allow high speed testing of the selector's privilege attributes.

#### 4.3.4.9 SEGMENT DESCRIPTOR CACHE

In addition to the selector value, every segment register has a segment descriptor cache register associated with it. Whenever a segment register's contents are changed, the 8-byte descriptor associated with that selector is automatically loaded (cached) on the chip. Once loaded, all references to that segment use the cached descriptor information instead of reaccessing the descriptor. The contents of the descriptor cache are not visible to the programmer. Since descriptor caches only change when a segment register is changed, programs which modify the descriptor tables must reload the appropriate segment registers after changing a descriptor's value.

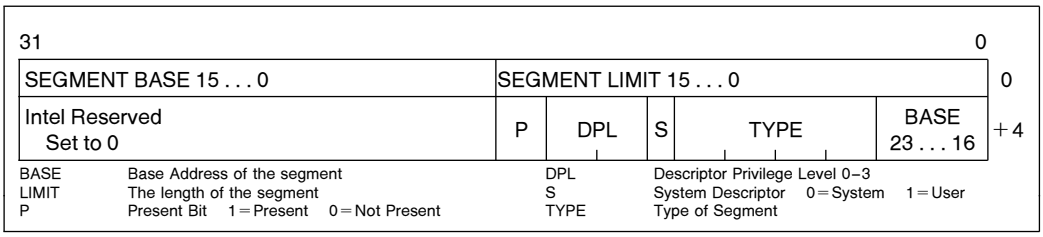


**Figure 4-9. 80286 Code and Data Segment Descriptors**

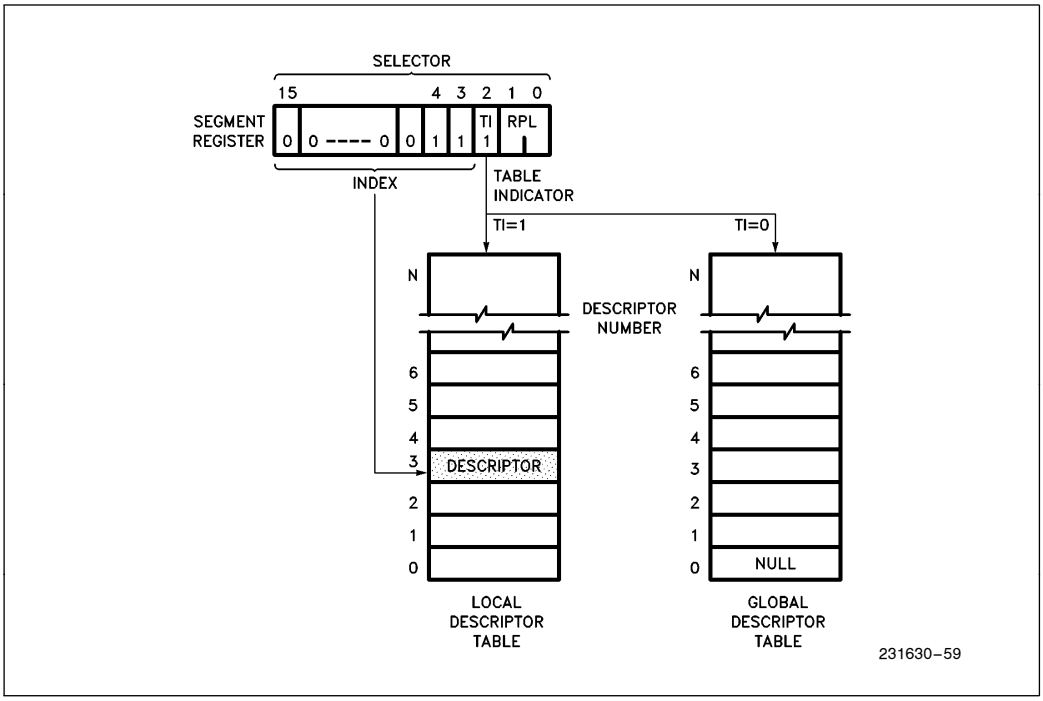


**Figure 4-10. Example Descriptor Selection**

### 4.3.4.10 SEGMENT DESCRIPTOR REGISTER SETTINGS

The contents of the segment descriptor cache vary depending on the mode the Intel386 DX is operating in. When operating in Real Address Mode, the segment base, limit, and other attributes within the segment cache registers are defined as shown in Figure 4-11.

For compatiblity with the 8086 architecture, the base is set to sixteen times the current selector value, the limit is fixed at 0000FFFFH, and the attributes are fixed so as to indicate the segment is present and fully usable. In Real Address Mode, the internal "privilege level" is always fixed to the highest level, level 0, so I/O and other privileged opcodes may be executed.

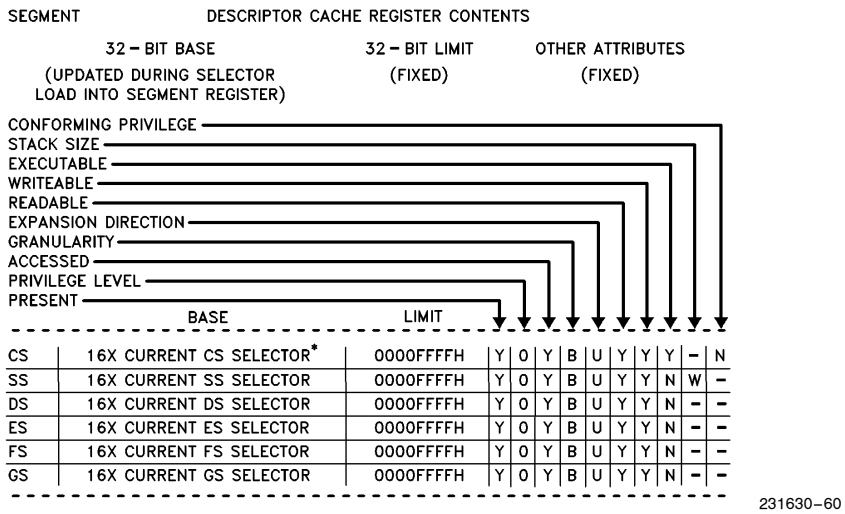


*Except the 32-bit CS base is initialized to FFFFF000H after reset until first intersegment control transfer (e.g. intersegment CALL, or intersegment JMP, or INT). (See Figure 4-13 Example.)

Key:
- Y = yes
- N = no
- 0 = privilege level 0
- 1 = privilege level 1
- 2 = privilege level 2
- 3 = privilege level 3
- U = expand up
- D = expand down
- B = byte granularity
- P = page granularity
- W = push/pop 16-bit words
- F = push/pop 32-bit dwords
- – = does not apply to that segment cache register

**Figure 4-11. Segment Descriptor Caches for Real Address Mode (Segment Limit and Attributes are Fixed)**

When operating in Protected Mode, the segment base, limit, and other attributes within the segment cache registers are defined as shown in Figure 4-12. In Protected Mode, each of these fields are defined according to the contents of the segment descriptor indexed by the selector value loaded into the segment register.

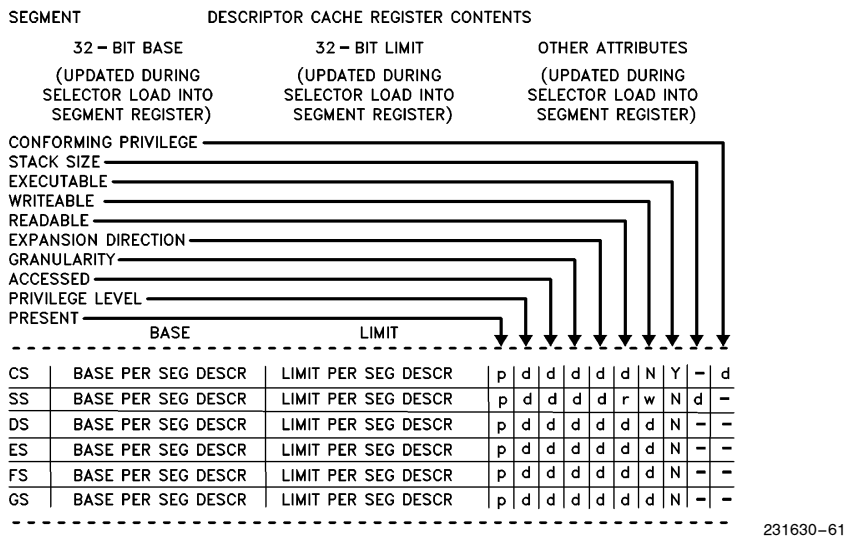


Key: Y = fixed yes
N = fixed no
d = per segment descriptor
p = per segment descriptor; descriptor must indicate ‘‘present’’ to avoid exception 11 (exception 12 in case of SS)
r = per segment descriptor, but descriptor must indicate ‘‘readable’’ to avoid exception 13 (special case for SS)
w = per segment descriptor, but descriptor must indicate ‘‘writable’’ to avoid exception 13 (special case for SS)
– = does not apply to that segment cache register

**Figure 4-12. Segment Descriptor Caches for Protected Mode (Loaded per Descriptor)**

When operating in a Virtual 8086 Mode within the Protected Mode, the segment base, limit, and other attributes within the segment cache registers are defined as shown in Figure 4-13. For compatibility with the 8086 architecture, the base is set to sixteen times the current selector value, the limit is fixed at 0000FFFFH, and the attributes are fixed so as to indicate the segment is present and fully usable. The virtual program executes at lowest privilege level, level 3, to allow trapping of all IOPL-sensitive instructions and level-0-only instructions.

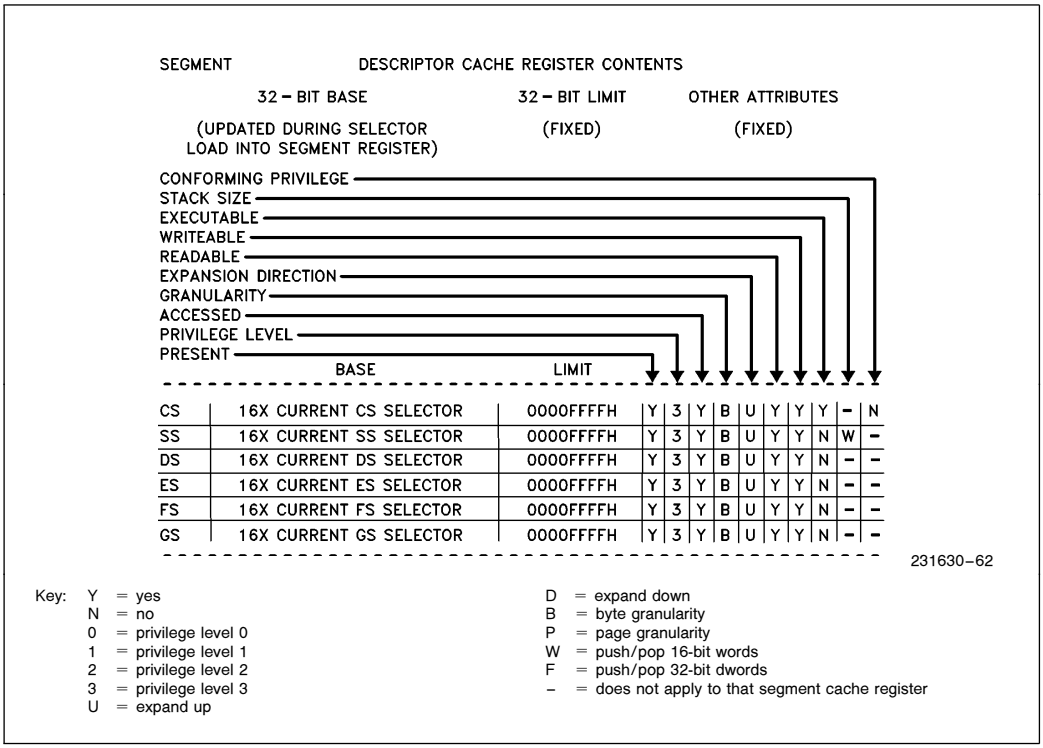


Key:
- Y = yes
- N = no
- 0 = privilege level 0
- 1 = privilege level 1
- 2 = privilege level 2
- 3 = privilege level 3
- U = expand up
- D = expand down
- B = byte granularity
- P = page granularity
- W = push/pop 16-bit words
- F = push/pop 32-bit dwords
- – = does not apply to that segment cache register

**Figure 4-13. Segment Descriptor Caches for Virtual 8086 Mode within Protected Mode (Segment Limit and Attributes are Fixed)**

## 4.4 PROTECTION

### 4.4.1 Protection Concepts

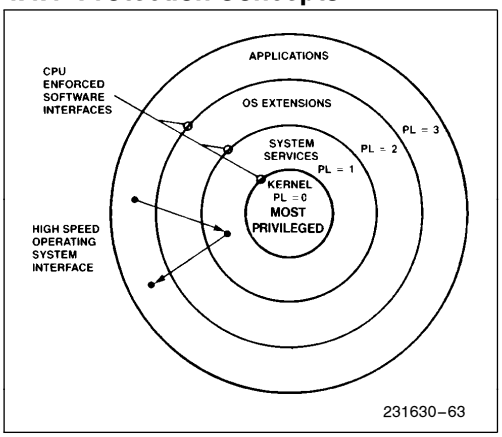


**Figure 4-14. Four-Level Hierachical Protection**

The Intel386 DX has four levels of protection which are optimized to support the needs of a multi-tasking operating system to isolate and protect user programs from each other and the operating system. The privilege levels control the use of privileged instructions, I/O instructions, and access to segments and segment descriptors. Unlike traditional microprocessor-based systems where this protection is achieved only through the use of complex external hardware and software the Intel386 DX provides the protection as part of its integrated Memory Management Unit. The Intel386 DX offers an additional type of protection on a page basis, when paging is enabled (See section 4.5.3 **Page Level Protection**).

The four-level hierarchical privilege system is illustrated in Figure 4-14. It is an extension of the user/supervisor privilege mode commonly used by minicomputers and, in fact, the user/supervisor mode is fully supported by the Intel386 DX paging mechanism. The privilege levels (PL) are numbered 0 through 3. Level 0 is the most privileged or trusted level.

### 4.4.2 Rules of Privilege

The Intel386 DX controls access to both data and procedures between levels of a task, according to the following rules.

- Data stored in a segment with privilege level **p** can be accessed only by code executing at a privilege level at least as privileged as **p**.
- A code segment/procedure with privilege level **p** can only be called by a task executing at the same or a lesser privilege level than **p**.

### 4.4.3 Privilege Levels

#### 4.4.3.1 TASK PRIVILEGE

At any point in time, a task on the Intel386 DX always executes at one of the four privilege levels. The Current Privilege Level (CPL) specifies the task's privilege level. A task's CPL may only be changed by control transfers through gate descriptors to a code segment with a different privilege level. (See section 4.4.4 **Privilege Level Transfers**) Thus, an application program running at PL = 3 may call an operating system routine at PL = 1 (via a gate) which would cause the task's CPL to be set to 1 until the operating system routine was finished.

#### 4.4.3.2 SELECTOR PRIVILEGE (RPL)

The privilege level of a selector is specified by the RPL field. The RPL is the two least significant bits of the selector. The selector's RPL is only used to establish a less trusted privilege level than the current privilege level for the use of a segment. This level is called the task's effective privilege level (EPL). The EPL is defined as being the least privileged (i.e. numerically larger) level of a task's CPL and a selector's RPL. Thus, if selector's RPL = 0 then the CPL always specifies the privilege level for making an access using the selector. On the other hand if RPL = 3 then a selector can only access segments at level 3 regardless of the task's CPL. The RPL is most commonly used to verify that pointers passed to an operating system procedure do not access data that is of higher privilege than the procedure that originated the pointer. Since the originator of a selector can specify any RPL value, the Adjust RPL (ARPL) instruction is provided to force the RPL bits to the originator's CPL.

#### 4.4.3.3 I/O PRIVILEGE AND I/O PERMISSION BITMAP

The I/O privilege level (IOPL, a 2-bit field in the EFLAG register) defines the least privileged level at which I/O instructions can be unconditionally performed. I/O instructions can be unconditionally performed when CPL ≤ IOPL. (The I/O instructions are IN, OUT, INS, OUTS, REP INS, and REP OUTS.) When CPL > IOPL, and the current task is associated with a 286 TSS, attempted I/O instructions cause an exception 13 fault. When CPL > IOPL, and the current task is associated with an Intel386 DX TSS, the I/O Permission Bitmap (part of an Intel386 DX TSS) is consulted on whether I/O to the port is allowed, or an exception 13 fault is to be generated

instead. For diagrams of the I/O Permission Bitmap, refer to Figures 4-15a and 4-15b. For further information on how the I/O Permission Bitmap is used in Protected Mode or in Virtual 8086 Mode, refer to section 4.6.4 Protection and I/O Permission Bitmap.

The I/O privilege level (IOPL) also affects whether several other instructions can be executed or cause an exception 13 fault instead. These instructions are called ''IOPL-sensitive'' instructions and they are CLI and STI. (Note that the LOCK prefix is *not* IOPL-sensitive on the Intel386 DX.)

The IOPL also affects whether the IF (interrupts enable flag) bit can be changed by loading a value into the EFLAGS register. When CPL $\leq$ IOPL, then the IF bit can be changed by loading a new value into the EFLAGS register. When CPL $>$ IOPL, the IF bit cannot be changed by a new value POP'ed into (or otherwise loaded into) the EFLAGS register; the IF bit merely remains unchanged and no exception is generated.

**Table 4-2. Pointer Test Instructions**

| Instruction | Operands | Function |
|---|---|---|
| ARPL | Selector, Register | Adjust Requested Privilege Level: adjusts the RPL of the selector to the numeric maximum of current selector RPL value and the RPL value in the register. Set zero flag if selector RPL was changed. |
| VERR | Selector | VERify for Read: sets the zero flag if the segment referred to by the selector can be read. |
| VERW | Selector | VERify for Write: sets the zero flag if the segment referred to by the selector can be written. |
| LSL | Register, Selector | Load Segment Limit: reads the segment limit into the register if privilege rules and descriptor type allow. Set zero flag if successful. |
| LAR | Register, Selector | Load Access Rights: reads the descriptor access rights byte into the register if privilege rules allow. Set zero flag if successful. |

#### 4.4.3.4 PRIVILEGE VALIDATION

The Intel386 DX provides several instructions to speed pointer testing and help maintain system integrity by verifying that the selector value refers to an appropriate segment. Table 4-2 summarizes the selector validation procedures available for the Intel386 DX.

This pointer verification prevents the common problem of an application at PL $=$ 3 calling a operating systems routine at PL $=$ 0 and passing the operating system routine a ''bad'' pointer which corrupts a data structure belonging to the operating system. If the operating system routine uses the ARPL instruction to ensure that the RPL of the selector has no greater privilege than that of the caller, then this problem can be avoided.

#### 4.4.3.5 DESCRIPTOR ACCESS

There are basically two types of segment accesses: those involving code segments such as control transfers, and those involving data accesses. Determining the ability of a task to access a segment involves the type of segment to be accessed, the instruction used, the type of descriptor used and CPL, RPL, and DPL as described above.

Any time an instruction loads data segment registers (DS, ES, FS, GS) the Intel386 DX makes protection validation checks. Selectors loaded in the DS, ES, FS, GS registers must refer only to data segments or readable code segments. The data access rules are specified in section 4.2.2 **Rules of Privilege**. The only exception to those rules is readable conforming code segments which can be accessed at any privilege level.

Finally the privilege validation checks are performed. The CPL is compared to the EPL and if the EPL is more privileged than the CPL an exception 13 (general protection fault) is generated.

The rules regarding the stack segment are slightly different than those involving data segments. Instructions that load selectors into SS must refer to data segment descriptors for writeable data segments. The DPL and RPL must equal the CPL. All other descriptor types or a privilege level violation will cause exception 13. A stack not present fault causes exception 12. Note that an exception 11 is used for a not-present code or data segment.

### 4.4.4 Privilege Level Transfers

Inter-segment control transfers occur when a selector is loaded in the CS register. For a typical system most of these transfers are simply the result of a call

**Table 4-3. Descriptor Types Used for Control Transfer**

| Control Transfer Types | Operation Types | Descriptor Referenced | Descriptor Table |
|---|---|---|---|
| Intersegment within the same privilege level | JMP, CALL, RET, IRET* | Code Segment | GDT/LDT |
| Intersegment to the same or higher privilege level Interrupt within task may change CPL | CALL | Call Gate | GDT/LDT |
| | Interrupt Instruction, Exception, External Interrupt | Trap or Interrupt Gate | IDT |
| Intersegment to a lower privilege level (changes task CPL) | RET, IRET* | Code Segment | GDT/LDT |
| | CALL, JMP | Task State Segment | GDT |
| Task Switch | CALL, JMP | Task Gate | GDT/LDT |
| | IRET** Interrupt Instruction, Exception, External Interrupt | Task Gate | IDT |

*NT (Nested Task bit of flag register) = 0
**NT (Nested Task bit of flag register) = 1

or a jump to another routine. There are five types of control transfers which are summarized in Table 4-3. Many of these transfers result in a privilege level transfer. Changing privilege levels is done only via control transfers, by using gates, task switches, and interrupt or trap gates.

Control transfers can only occur if the operation which loaded the selector references the correct descriptor type. Any violation of these descriptor usage rules will cause an exception 13 (e.g. JMP through a call gate, or IRET from a normal subroutine call).

In order to provide further system security, all control transfers are also subject to the privilege rules.

**The privilege rules require that:**

— Privilege level transitions can only occur via gates.

— JMPs can be made to a non-conforming code segment with the same privilege or to a conforming code segment with greater or equal privilege.

— CALLs can be made to a non-conforming code segment with the same privilege or via a gate to a more privileged level.

— Interrupts handled within the task obey the same privilege rules as CALLs.

— Conforming Code segments are accessible by privilege levels which are the same or less privileged than the conforming-code segment's DPL.

— Both the requested privilege level (RPL) in the selector pointing to the gate and the task's CPL must be of equal or greater privilege than the gate's DPL.

— The code segment selected in the gate must be the same or more privileged than the task's CPL.

— Return instructions that do not switch tasks can only return control to a code segment with same or less privilege.

— Task switches can be performed by a CALL, JMP, or INT which references either a task gate or task state segment who's DPL is less privileged or the same privilege as the old task's CPL.

Any control transfer that changes CPL within a task causes a change of stacks as a result of the privilege level change. The initial values of SS:ESP for privilege levels 0, 1, and 2 are retained in the task state segment (see section 4.4.6 **Task Switching**). During a JMP or CALL control transfer, the new stack pointer is loaded into the SS and ESP registers and the previous stack pointer is pushed onto the new stack.

When RETurning to the original privilege level, use of the lower-privileged stack is restored as part of the RET or IRET instruction operation. For subroutine calls that pass parameters on the stack and cross privilege levels, a fixed number of words (as specified in the gate's word count field) are copied from the previous stack to the current stack. The inter-segment RET instruction with a stack adjustment value will correctly restore the previous stack pointer upon return.

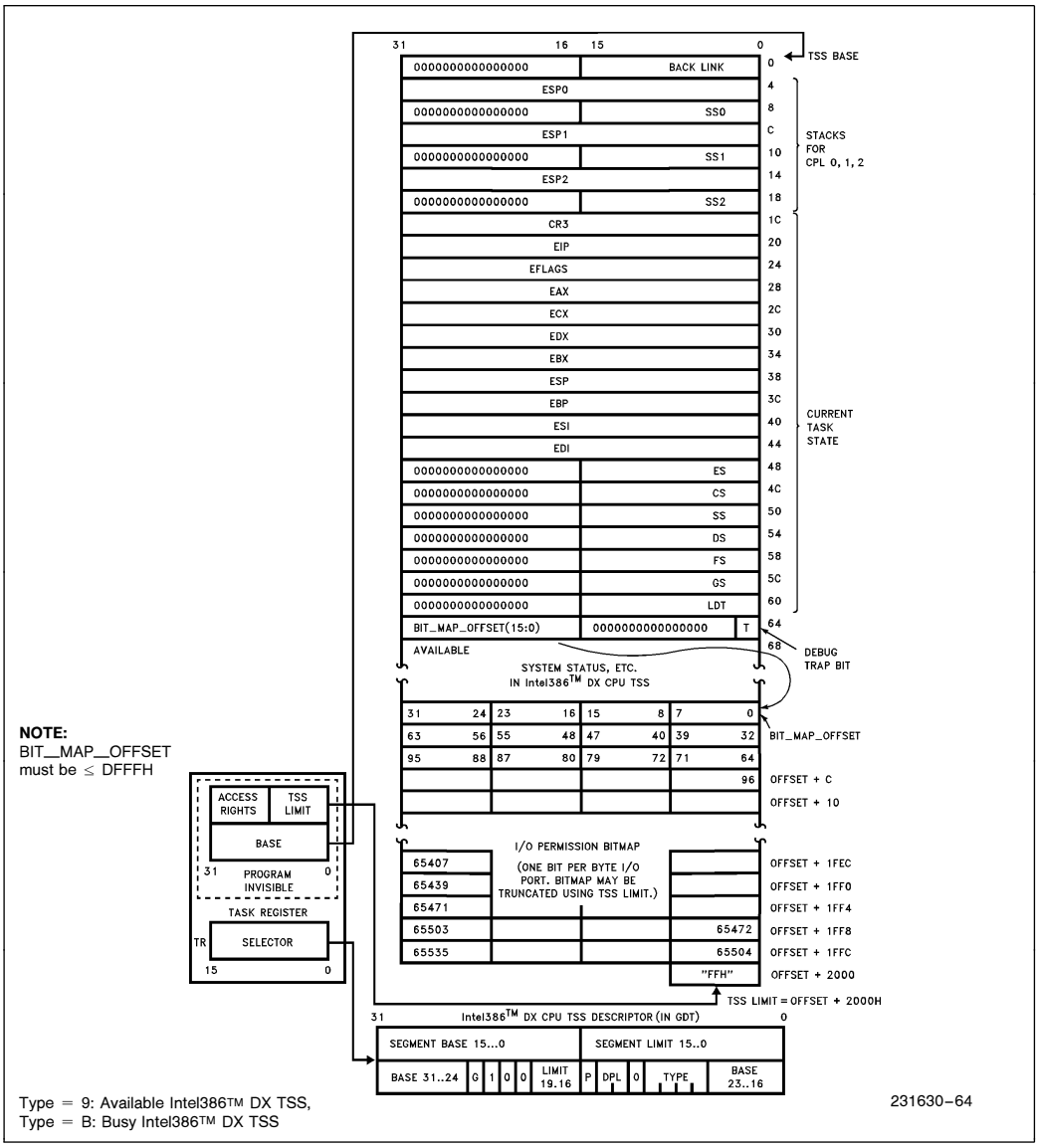


**NOTE:**
BIT__MAP__OFFSET must be ≤ DFFFH

Type = 9: Available Intel386™ DX TSS,
Type = B: Busy Intel386™ DX TSS

**Figure 4-15a. Intel386™ DX TSS and TSS Registers**

| | 31 | 30 | 29 | 28 | 27 | 26 | 25 | 24 | 23 | 22 | 21 | 20 | 19 | 18 | 17 | 16 | 15 | 14 | 13 | 12 | 11 | 10 | 9 | 8 | 7 | 6 | 5 | 4 | 3 | 2 | 1 | 0 |
|---|---|---|---|---|---|---|---|---|---|---|---|---|---|---|---|---|---|---|---|---|---|---|---|---|---|---|---|---|---|---|---|---|
| 31 | 1 | 1 | 1 | 1 | 0 | 1 | 1 | 0 | 0 | 0 | 0 | 0 | 1 | 1 | 1 | 1 | 0 | 1 | 0 | 0 | 1 | 1 | 0 | 0 | 0 | 0 | 0 | 0 | 0 | 0 | 1 | 1 |
| 63 | 0 | 0 | 1 | 0 | 0 | 0 | 1 | 1 | 1 | 1 | 0 | 0 | 1 | 0 | 1 | 0 | 1 | 1 | 1 | 1 | 1 | 1 | 0 | 0 | 1 | 1 | 1 | 1 | 1 | 0 | 0 | 1 |
| 95 | 1 | 1 | 1 | 1 | 1 | 1 | 1 | 1 | 1 | 1 | 1 | 1 | 1 | 1 | 1 | 1 | 1 | 1 | 1 | 1 | 1 | 1 | 1 | 1 | 1 | 1 | 1 | 1 | 1 | 1 | 1 | 1 |
| 127 | 0 | 0 | 0 | 0 | 0 | 0 | 0 | 0 | 0 | 0 | 0 | 0 | 0 | 0 | 0 | 0 | 0 | 0 | 0 | 0 | 0 | 0 | 0 | 0 | 0 | 0 | 0 | 0 | 0 | 0 | 0 | 0 |
| | | | | | | | | | | | | | | | | | | | | | | | | | 1 | 1 | 1 | 1 | 1 | 1 | 1 | 1 |

etc.

I/O Ports Accessible: 2 → 9, 12, 13, 15, 20 → 24, 27, 33, 34, 40, 41, 48, 50, 52, 53, 58 → 60, 62, 63, 96 → 127

231630–71

**Figure 4-15b. Sample I/O Permission Bit Map**

## 4.4.5 Call Gates

Gates provide protected, indirect CALLs. One of the major uses of gates is to provide a secure method of privilege transfers within a task. Since the operating system defines all of the gates in a system, it can ensure that all gates only allow entry into a few trusted procedures (such as those which allocate memory, or perform I/O).

Gate descriptors follow the data access rules of privilege; that is, gates can be accessed by a task if the EPL, is equal to or more privileged than the gate descriptor's DPL. Gates follow the control transfer rules of privilege and therefore may only transfer control to a more privileged level.

Call Gates are accessed via a CALL instruction and are syntactically identical to calling a normal subroutine. When an inter-level Intel386 DX call gate is activated, the following actions occur.

1. Load CS:EIP from gate check for validity
2. SS is pushed zero-extended to 32 bits
3. ESP is pushed
4. Copy Word Count 32-bit parameters from the old stack to the new stack
5. Push Return address on stack

The procedure is identical for 80286 Call gates, except that 16-bit parameters are copied and 16-bit registers are pushed.

Interrupt Gates and Trap gates work in a similar fashion as the call gates, except there is no copying of parameters. The only difference between Trap and Interrupt gates is that control transfers through an Interrupt gate disable further interrupts (i.e. the IF bit is set to 0), and Trap gates leave the interrupt status unchanged.

## 4.4.6 Task Switching

A very important attribute of any multi-tasking/multi-user operating systems is its ability to rapidly switch between tasks or processes. The Intel386 DX directly supports this operation by providing a task switch instruction in hardware. The Intel386 DX task switch operation saves the entire state of the machine (all of the registers, address space, and a link to the previous task), loads a new execution state, performs protection checks, and commences execution in the new task, in about 17 microseconds. Like transfer of control via gates, the task switch operation is invoked by executing an inter-segment JMP or CALL instruction which refers to a Task State Segment (TSS), or a task gate descriptor in the GDT or LDT. An INT n instruction, exception, trap, or external interrupt may also invoke the task switch operation if there is a task gate descriptor in the associated IDT descriptor slot.

The TSS descriptor points to a segment (see Figure 4-15) containing the entire Intel386 DX execution state while a task gate descriptor contains a TSS selector. The Intel386 DX supports both 80286 and Intel386 DX style TSSs. Figure 4-16 shows a 80286 TSS. The limit of an Intel386 DX TSS must be greater than 0064H (002BH for a 80286 TSS), and can be as large as 4 Gigabytes. In the additional TSS space, the operating system is free to store additional information such as the reason the task is inactive, time the task has spent running, and open files belong to the task.

Each task must have a TSS associated with it. The current TSS is identified by a special register in the Intel386 DX called the Task State Segment Register (TR). This register contains a selector referring to the task state segment descriptor that defines the current TSS. A hidden base and limit register associated with TR are loaded whenever TR is loaded with a new selector. Returning from a task is accomplished by the IRET instruction. When IRET is executed, control is returned to the task which was interrupted. The current executing task's state is saved in the TSS and the old task state is restored from its TSS.

Several bits in the flag register and machine status word (CR0) give information about the state of a task which are useful to the operating system. The Nested Task (NT) (bit 14 in EFLAGS) controls the function of the IRET instruction. If NT = 0, the IRET instruction performs the regular return; when NT = 1, IRET performs a task switch operation back to the previous task. The NT bit is set or reset in the following fashion:

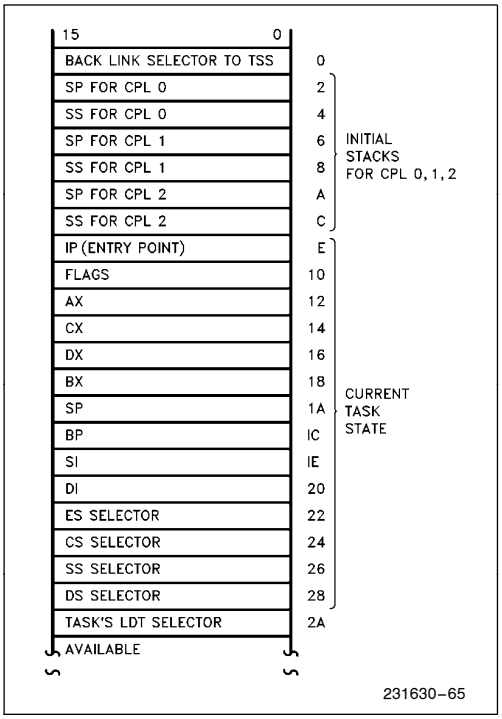


**Figure 4-16. 80286 TSS**

When a CALL or INT instruction initiates a task switch, the new TSS will be marked busy and the back link field of the new TSS set to the old TSS selector. The NT bit of the new task is set by CALL or INT initiated task switches. An interrupt that does not cause a task switch will clear NT. (The NT bit will be restored after execution of the interrupt handler) NT may also be set or cleared by POPF or IRET instructions.

The Intel386 DX task state segment is marked busy by changing the descriptor type field from TYPE 9H to TYPE BH. An 80286 TSS is marked busy by changing the descriptor type field from TYPE 1 to TYPE 3. Use of a selector that references a busy task state segment causes an exception 13.

The Virtual Mode (VM) bit 17 is used to indicate if a task, is a virtual 8086 task. If VM = 1, then the tasks will use the Real Mode addressing mechanism. The virtual 8086 environment is only entered and exited via a task switch (see section 4.6 **Virtual Mode**).

The coprocessor's state is not automatically saved when a task switch occurs, because the incoming task may not use the coprocessor. The Task Switched (TS) Bit (bit 3 in the CR0) helps deal with the coprocessor's state in a multi-tasking environment. Whenever the Intel386 DX switches tasks, it sets the TS bit. The Intel386 DX detects the first use of a processor extension instruction after a task switch and causes the processor extension not available exception 7. The exception handler for exception 7 may then decide whether to save the state of the coprocessor. A processor extension not present exception (7) will occur when attempting to execute an ESC or WAIT instruction if the Task Switched and Monitor coprocessor extension bits are both set (i.e. TS = 1 and MP = 1).

The **T** bit in the Intel386 DX TSS indicates that the processor should generate a debug exception when switching to a task. If T = 1 then upon entry to a new task a debug exception 1 will be generated.

### 4.4.7 Initialization and Transition to Protected Mode

Since the Intel386 DX begins executing in Real Mode immediately after RESET it is necessary to initialize the system tables and registers with the appropriate values.

The GDT and IDT registers must refer to a valid GDT and IDT. The IDT should be at least 256 bytes long, and GDT must contain descriptors for the initial code, and data segments. Figure 4-17 shows the tables and Figure 4-18 the descriptors needed for a simple Protected Mode Intel386 DX system. It has a single code and single data/stack segment each four gigabytes long and a single privilege level PL = 0.

The actual method of enabling Protected Mode is to load CR0 with the PE bit set, via the MOV CR0, R/M instruction. This puts the Intel386 DX in Protected Mode.

After enabling Protected Mode, the next instruction should execute an intersegment JMP to load the CS register and flush the instruction decode queue. The final step is to load all of the data segment registers with the initial selector values.

An alternate approach to entering Protected Mode which is especially appropriate for multi-tasking operating systems, is to use the built in task-switch to load all of the registers. In this case the GDT would contain two TSS descriptors in addition to the code and data descriptors needed for the first task. The first JMP instruction in Protected Mode would jump to the TSS causing a task switch and loading all of the registers with the values stored in the TSS. The Task State Segment Register should be initialized to point to a valid TSS descriptor since a task switch saves the state of the current task in a task state segment.

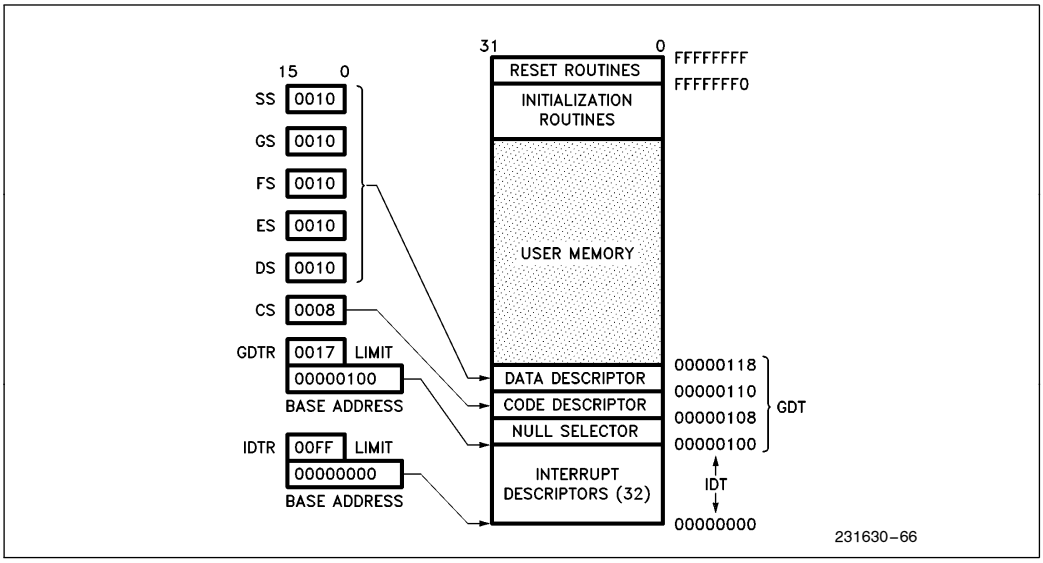


**Figure 4-17. Simple Protected System**

| | | | | | | | | | | | | | | |
|---|---|---|---|---|---|---|---|---|---|---|---|---|---|---|
| DATA DESCRIPTOR | SEGMENT BASE 15 . . . 0 0118 (H) | | | | | | SEGMENT LIMIT 15 . . . 0 FFFF (H) | | | | | | | |
| | BASE 31 . . . 24 00 (H) | G 1 | D 1 | 0 | 0 | LIMIT 19.16 F (H) | 1 | 0 | 0 | 1 | 0 0 1 | | 0 | BASE 23 . . . 16 00 (H) |
| CODE DESCRIPTOR | SEGMENT BASE 15 . . . 0 0118 (H) | | | | | | SEGMENT LIMIT 15 . . . 0 FFFF (H) | | | | | | | |
| | BASE 31 . . . 24 00 (H) | G 1 | D 1 | 0 | 0 | LIMIT 19.16 F (H) | 1 | 0 | 0 | 1 | 1 0 1 | | 0 | BASE 23 . . . 16 00 (H) |
| | NULL | | | | | | DESCRIPTOR | | | | | | | |
| | | | | | | | | | | | | | | |
| | 31 | | | | 24 | 16 | 15 | | | | 8 | | | 0 |

**Figure 4-18. GDT Descriptors for Simple System**

### 4.4.8 Tools for Building Protected Systems

In order to simplify the design of a protected multitasking system, Intel provides a tool which allows the system designer an easy method of constructing the data structures needed for a Protected Mode Intel386 DX system. This tool is the builder BLD-386. BLD-386 lets the operating system writer specify all of the segment descriptors discussed in the previous sections (LDTs, IDTs, GDTs, Gates, and TSSs) in a high-level language.

## 4.5 PAGING

### 4.5.1 Paging Concepts

Paging is another type of memory management useful for virtual memory multitasking operating systems. Unlike segmentation which modularizes programs and data into variable length segments, paging divides programs into multiple uniform size pages. Pages bear no direct relation to the logical

structure of a program. While segment selectors can be considered the logical ''name'' of a program module or data structure, a page most likely corresponds to only a portion of a module or data structure.

By taking advantage of the locality of reference displayed by most programs, only a small number of pages from each active task need be in memory at any one moment.

## 4.5.2 Paging Organization

### 4.5.2.1 PAGE MECHANISM

The Intel386 DX uses two levels of tables to translate the linear address (from the segmentation unit) into a physical address. There are three components to the paging mechanism of the Intel386 DX: the page directory, the page tables, and the page itself (page frame). All memory-resident elements of the Intel386 DX paging mechanism are the same size, namely, 4K bytes. A uniform size for all of the elements simplifies memory allocation and reallocation schemes, since there is no problem with memory fragmentation. Figure 4-19 shows how the paging mechanism works.

### 4.5.2.2 PAGE DESCRIPTOR BASE REGISTER

CR2 is the Page Fault Linear Address register. It holds the 32-bit linear address which caused the last page fault detected.

CR3 is the Page Directory Physical Base Address Register. It contains the physical starting address of the Page Directory. The lower 12 bits of CR3 are always zero to ensure that the Page Directory is always page aligned. Loading it via a MOV CR3, reg instruction causes the Page Table Entry cache to be flushed, as will a task switch through a TSS which **changes** the value of CR0. (See 4.5.4 **Translation Lookaside Buffer**).

### 4.5.2.3 PAGE DIRECTORY

The Page Directory is 4K bytes long and allows up to 1024 Page Directory Entries. Each Page Directory Entry contains the address of the next level of tables, the Page Tables and information about the page table. The contents of a Page Directory Entry are shown in Figure 4-20. The upper 10 bits of the linear address (A22–A31) are used as an index to select the correct Page Directory Entry.

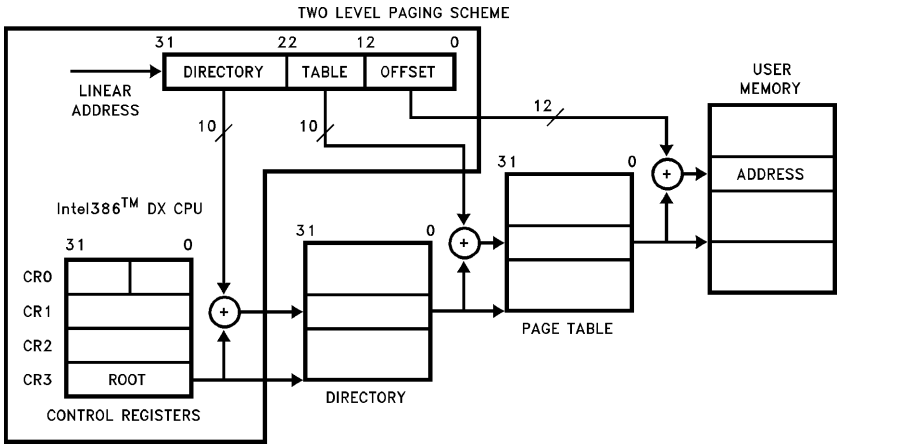


**Figure 4-19. Paging Mechanism**

| 31 … 12 | 11 | 10 | 9 | 8 | 7 | 6 | 5 | 4 | 3 | 2 | 1 | 0 |
|---|---|---|---|---|---|---|---|---|---|---|---|---|
| PAGE TABLE ADDRESS 31..12 | OS RESERVED | | | 0 | 0 | D | A | 0 | 0 | U/S | R/W | P |

**Figure 4-20. Page Directory Entry (Points to Page Table)**

| 31 12 | 11 10 9 | 8 | 7 | 6 | 5 | 4 | 3 | 2 | 1 | 0 |
|---|---|---|---|---|---|---|---|---|---|---|
| PAGE FRAME ADDRESS 31..12 | OS RESERVED | 0 | 0 | D | A | 0 | 0 | U/S | R/W | P |

**Figure 4-21. Page Table Entry (Points to Page)**

#### 4.5.2.4 PAGE TABLES

Each Page Table is 4K bytes and holds up to 1024 Page Table Entries. Page Table Entries contain the starting address of the page frame and statistical information about the page (see Figure 4-21). Address bits A12–A21 are used as an index to select one of the 1024 Page Table Entries. The 20 upper-bit page frame address is concatenated with the lower 12 bits of the linear address to form the physical address. Page tables can be shared between tasks and swapped to disks.

#### 4.5.2.5 PAGE DIRECTORY/TABLE ENTRIES

The lower 12 bits of the Page Table Entries and Page Directory Entries contain statistical information about pages and page tables respectively. The **P** (Present) bit 0 indicates if a Page Directory or Page Table entry can be used in address translation. If P = 1 the entry can be used for address translation; if P = 0 the entry can not be used for translation. Note that the present bit of the page table entry that points to the page where code is currently being executed should always be set. Code that marks its own page not present should not be written. All of the other bits are available for use by the software. For example the remaining 31 bits could be used to indicate where on the disk the page is stored.

The **A** (Accessed) bit 5, is set by the Intel386 DX for both types of entries before a read or write access occurs to an address covered by the entry. The **D** (Dirty) bit 6 is set to 1 before a write to an address covered by that page table entry occurs. The D bit is undefined for Page Directory Entries. When the P, A and D bits are updated by the Intel386 DX, the processor generates a Read-Modify-Write cycle which locks the bus and prevents conflicts with other processors or perpherials. Software which modifies these bits should use the LOCK prefix to ensure the integrity of the page tables in multi-master systems.

The 3 bits marked **OS Reserved** in Figure 4-20 and Figure 4-21 (bits 9–11) are software definable. OSs are free to use these bits for whatever purpose they wish. An example use of the **OS Reserved** bits would be to store information about page aging. By keeping track of how long a page has been in memory since being accessed, an operating system can implement a page replacement algorithm like Least Recently Used.

The (User/Supervisor) U/S bit 2 and the (Read/Write) R/W bit 1 are used to provide protection attributes for individual pages.

### 4.5.3 Page Level Protection (R/W, U/S Bits)

The Intel386 DX provides a set of protection attributes for paging systems. The paging mechanism distinguishes between two levels of protection: User which corresponds to level 3 of the segmentation based protection, and supervisor which encompasses all of the other protection levels (0, 1, 2). Programs executing at Level 0, 1 or 2 bypass the page protection, although segmentation based protection is still enforced by the hardware.

The U/S and R/W bits are used to provide User/Supervisor and Read/Write protection for individual pages or for all pages covered by a Page Table Directory Entry. The U/S and R/W bits in the first level Page Directory Table apply to all pages described by the page table pointed to by that directory entry. The U/S and R/W bits in the second level Page Table Entry apply only to the page described by that entry. The U/S and R/W bits for a given page are obtained by taking the most restrictive of the U/S and R/W from the Page Directory Table Entries and the Page Table Entries and using these bits to address the page.

Example: If the U/S and R/W bits for the Page Directory entry were 10 and the U/S and R/W bits for the Page Table Entry were 01, the access rights for the page would be 01, the numerically smaller of the two. Table 4-4 shows the affect of the U/S and R/W bits on accessing memory.

**Table 4-4. Protection Provided by R/W and U/S**

| U/S | R/W | Permitted Level 3 | Permitted Access Levels 0, 1, or 2 |
|---|---|---|---|
| 0 | 0 | None | Read/Write |
| 0 | 1 | None | Read/Write |
| 1 | 0 | Read-Only | Read/Write |
| 1 | 1 | Read/Write | Read/Write |

However a given segment can be easily made read-only for level 0, 1, or 2 via the use of segmented protection mechanisms. (Section 4.4 **Protection**).

### 4.5.4 Translation Lookaside Buffer

The Intel386 DX paging hardware is designed to support demand paged virtual memory systems. However, performance would degrade substantially if the processor was required to access two levels of tables for every memory reference. To solve this problem, the Intel386 DX keeps a cache of the most recently accessed pages, this cache is called the Translation Lookaside Buffer (TLB). The TLB is a four-way set associative 32-entry page table cache. It automatically keeps the most commonly used Page Table Entries in the processor. The 32-entry TLB coupled with a 4K page size, results in coverage of 128K bytes of memory addresses. For many common multi-tasking systems, the TLB will have a hit rate of about 98%. This means that the processor will only have to access the two-level page structure on 2% of all memory references. Figure 4-22 illustrates how the TLB complements the Intel386 DX's paging mechanism.

### 4.5.5 Paging Operation

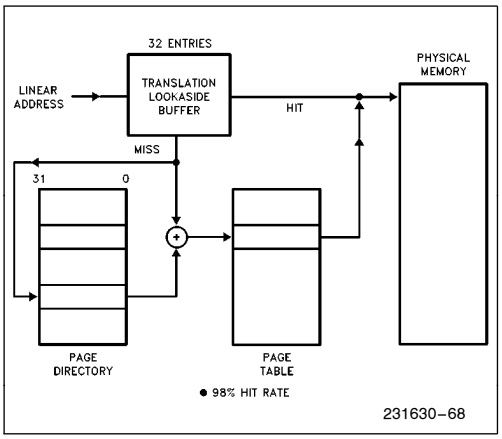


**Figure 4-22. Translation Lookaside Buffer**

The paging hardware operates in the following fashion. The paging unit hardware receives a 32-bit linear address from the segmentation unit. The upper 20 linear address bits are compared with all 32 entries in the TLB to determine if there is a match. If there is a match (i.e. a TLB hit), then the 32-bit physical address is calculated and will be placed on the address bus.

However, if the page table entry is not in the TLB, the Intel386 DX will read the appropriate Page Directory Entry. If P = 1 on the Page Directory Entry indicating that the page table is in memory, then the Intel386 DX will read the appropriate Page Table Entry and set the Access bit. If P = 1 on the Page Table Entry indicating that the page is in memory, the Intel386 DX will update the Access and Dirty bits as needed and fetch the operand. The upper 20 bits of the linear address, read from the page table, will be stored in the TLB for future accesses. However, if P = 0 for either the Page Directory Entry or the Page Table Entry, then the processor will generate a page fault, an Exception 14.

The processor will also generate an exception 14, page fault, if the memory reference violated the page protection attributes (i.e. U/S or R/W) (e.g. trying to write to a read-only page). CR2 will hold the linear address which caused the page fault. If a second page fault occurs, while the processor is attempting to enter the service routine for the first, then the processor will invoke the page fault (exception 14) handler a second time, rather than the double fault (exception 8) handler. Since Exception 14 is classified as a fault, CS: EIP will point to the instruction causing the page fault. The 16-bit error code pushed as part of the page fault handler will contain status bits which indicate the cause of the page fault.

The 16-bit error code is used by the operating system to determine how to handle the page fault Figure 4-23A shows the format of the page-fault error code and the interpretation of the bits.

**NOTE:**
Even though the bits in the error code (U/S, W/R, and P) have similar names as the bits in the Page Directory/Table Entries, the interpretation of the error code bits is different. Figure 4-23B indicates what type of access caused the page fault.

| 15 | | | | | | | | | | | | | 3 | 2 | 1 | 0 |
|---|---|---|---|---|---|---|---|---|---|---|---|---|---|---|---|---|
| U | U | U | U | U | U | U | U | U | U | U | U | U | U | U/S | W/R | P |

**Figure 4-23A. Page Fault Error Code Format**

**U/S**: The U/S bit indicates whether the access causing the fault occurred when the processor was executing in User Mode (U/S = 1) or in Supervisor mode (U/S = 0)

**W/R**: The W/R bit indicates whether the access causing the fault was a Read (W/R = 0) or a Write (W/R = 1)

**P**: The P bit indicates whether a page fault was caused by a not-present page (P = 0), or by a page level protection violation (P = 1)

**U**: UNDEFINED

| U/S | W/R | Access Type |
|---|---|---|
| 0 | 0 | Supervisor* Read |
| 0 | 1 | Supervisor Write |
| 1 | 0 | User Read |
| 1 | 1 | User Write |

*Descriptor table access will fault with U/S = 0, even if the program is executing at level 3.

**Figure 4-23B. Type of Access Causing Page Fault**

### 4.5.6 Operating System Responsibilities

The Intel386 DX takes care of the page address translation process, relieving the burden from an operating system in a demand-paged system. The operating system is responsible for setting up the initial page tables, and handling any page faults. The operating system also is required to invalidate (i.e. flush) the TLB when any changes are made to any of the page table entries. The operating system must reload CR3 to cause the TLB to be flushed.

Setting up the tables is simply a matter of loading CR3 with the address of the Page Directory, and allocating space for the Page Directory and the Page Tables. The primary responsibility of the operating system is to implement a swapping policy and handle all of the page faults.

A final concern of the operating system is to ensure that the TLB cache matches the information in the paging tables. In particular, any time the operating system sets the P present bit of page table entry to zero, the TLB must be flushed. Operating systems may want to take advantage of the fact that CR3 is stored as part of a TSS, to give every task or group of tasks its own set of page tables.

## 4.6 VIRTUAL 8086 ENVIRONMENT

### 4.6.1 Executing 8086 Programs

The Intel386 DX allows the execution of 8086 application programs in both Real Mode and in the Virtual 8086 Mode (Virtual Mode). Of the two methods, Virtual 8086 Mode offers the system designer the most flexibility. The Virtual 8086 Mode allows the execution of 8086 applications, while still allowing the system designer to take full advantage of the Intel386 DX protection mechanism. In particular, the Intel386 DX allows the simultaneous execution of 8086 operating systems and its applications, and an Intel386 DX operating system and both 80286 and Intel386 DX applications. Thus, in a multi-user Intel386 DX computer, one person could be running an MS-DOS spreadsheet, another person using MS-DOS, and a third person could be running multiple Unix utilities and applications. Each person in this scenario would believe that he had the computer completely to himself. Figure 4-24 illustrates this concept.

### 4.6.2 Virtual 8086 Mode Addressing Mechanism

One of the major differences between Intel386 DX Real and Protected modes is how the segment selectors are interpreted. When the processor is executing in Virtual 8086 Mode the segment registers are used in an identical fashion to Real Mode. The contents of the segment register is shifted left 4 bits and added to the offset to form the segment base linear address.

The Intel386 DX allows the operating system to specify which programs use the 8086 style address mechanism, and which programs use Protected Mode addressing, on a per task basis. Through the use of paging, the one megabyte address space of the Virtual Mode task can be mapped to anywhere in the 4 gigabyte linear address space of the Intel386 DX. Like Real Mode, Virtual Mode effective addresses (i.e., segment offsets) that exceed 64K byte will cause an exception 13. However, these restrictions should not prove to be important, because most tasks running in Virtual 8086 Mode will simply be existing 8086 application programs.

### 4.6.3 Paging In Virtual Mode

The paging hardware allows the concurrent running of multiple Virtual Mode tasks, and provides protection and operating system isolation. Although it is not strictly necessary to have the paging hardware enabled to run Virtual Mode tasks, it is needed in order to run multiple Virtual Mode tasks or to relocate the address space of a Virtual Mode task to physical address space greater than one megabyte.

The paging hardware allows the 20-bit linear address produced by a Virtual Mode program to be divided into up to 256 pages. Each one of the pages can be located anywhere within the maximum 4 gigabyte physical address space of the Intel386 DX. In addition, since CR3 (the Page Directory Base Register) is loaded by a task switch, each Virtual Mode task can use a different mapping scheme to map pages to different physical locations. Finally, the paging hardware allows the sharing of the 8086 op-

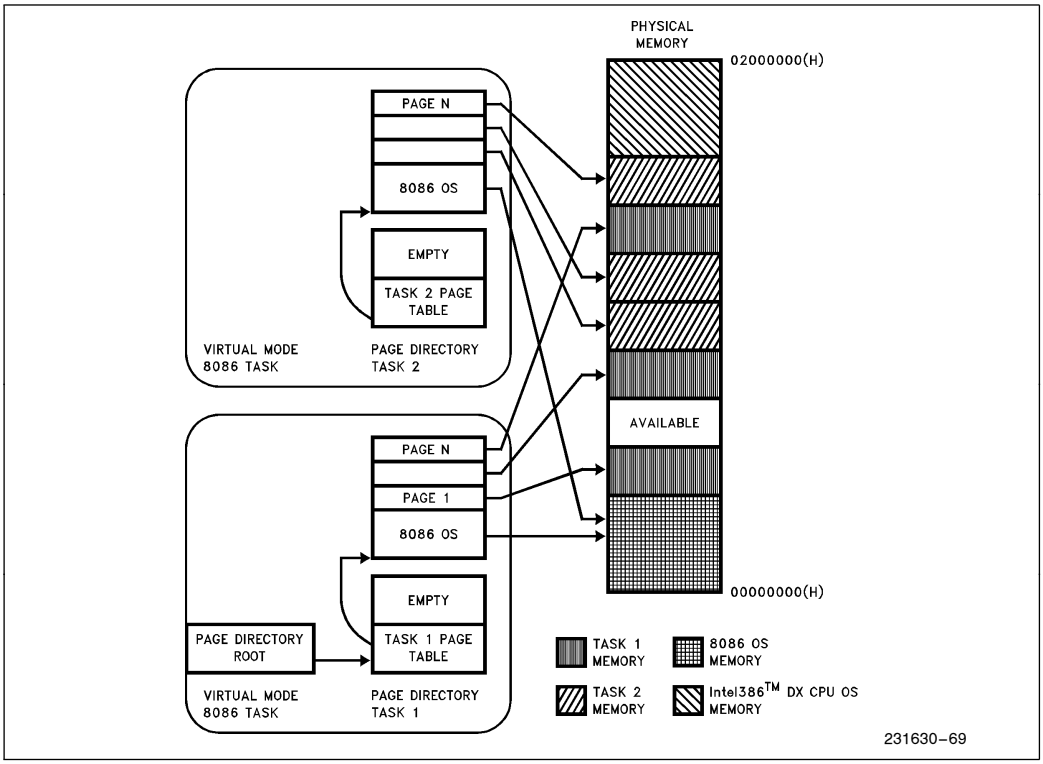


**Figure 4-24. Virtual 8086 Environment Memory Management**

erating system code between multiple 8086 applications. Figure 4-24 shows how the Intel386 DX paging hardware enables multiple 8086 programs to run under a virtual memory demand paged system.

### 4.6.4 Protection and I/O Permission Bitmap

All Virtual 8086 Mode programs execute at privilege level 3, the level of least privilege. As such, Virtual 8086 Mode programs are subject to all of the protection checks defined in Protected Mode. (This is different from Real Mode which implicitly is executing at privilege level 0, the level of greatest privilege.) Thus, an attempt to execute a privileged instruction when in Virtual 8086 Mode will cause an exception 13 fault.

The following are privileged instructions, which may be executed only at Privilege Level 0. Therefore, attempting to execute these instructions in Virtual 8086 Mode (or anytime CPL > 0) causes an exception 13 fault:

```
LIDT;   MOV DRn,reg;   MOV reg,DRn;
LGDT;   MOV TRn,reg;   MOV reg,TRn;
LMSW;   MOV CRn,reg;   MOV reg,CRn.
CLTS;
HLT;
```

Several instructions, particularly those applying to the multitasking model and protection model, are available only in Protected Mode. Therefore, attempting to execute the following instructions in Real Mode or in Virtual 8086 Mode generates an exception 6 fault:

```
LTR;    STR;
LLDT;   SLDT;
LAR;    VERR;
LSL;    VERW;
ARPL.
```

The instructions which are IOPL-sensitive in Protected Mode are:

```
IN;        STI;
OUT;       CLI
INS;
OUTS;
REP INS;
REP OUTS;
```

In Virtual 8086 Mode, a slightly different set of instructions are made IOPL-sensitive. The following instructions are IOPL-sensitive in Virtual 8086 Mode:

```
INT n;    STI;
PUSHF;    CLI;
POPF;     IRET
```

The PUSHF, POPF, and IRET instructions are IOPL-sensitive in Virtual 8086 Mode only. This provision allows the IF flag (interrupt enable flag) to be virtualized to the Virtual 8086 Mode program. The INT n software interrupt instruction is also IOPL-sensitive in Virtual 8086 Mode. Note, however, that the INT 3 (opcode 0CCH), INTO, and BOUND instructions are not IOPL-sensitive in Virtual 8086 mode (they aren't IOPL sensitive in Protected Mode either).

Note that the I/O instructions (IN, OUT, INS, OUTS, REP INS, and REP OUTS) are **not** IOPL-sensitive in Virtual 8086 mode. Rather, the I/O instructions become automatically sensitive to the **I/O Permission Bitmap** contained in the **Intel386 DX Task State Segment**. The I/O Permission Bitmap, automatically used by the Intel386 DX in Virtual 8086 Mode, is illustrated by Figures 4.15a and 4-15b.

The I/O Permission Bitmap can be viewed as a 0–64 Kbit bit string, which begins in memory at offset Bit__Map__Offset in the current TSS. Bit__Map__Offset must be ≤ DFFFH so the entire bit map and the byte FFH which follows the bit map are all at offsets ≤ FFFFH from the TSS base. The 16-bit pointer Bit__Map__Offset (15:0) is found in the word beginning at offset 66H (102 decimal) from the TSS base, as shown in Figure 4-15a.

Each bit in the I/O Permission Bitmap corresponds to a single byte-wide I/O port, as illustrated in Figure 4-15a. If a bit is 0, I/O to the corresponding byte-wide port can occur without generating an exception. Otherwise the I/O instruction causes an exception 13 fault. Since every byte-wide I/O port must be protectable, all bits corresponding to a word-wide or dword-wide port must be 0 for the word-wide or dword-wide I/O to be permitted. If all the referenced bits are 0, the I/O will be allowed. If any referenced bits are 1, the attempted I/O will cause an exception 13 fault.

Due to the use of a pointer to the base of the I/O Permission Bitmap, the bitmap may be located anywhere within the TSS, or may be ignored completely by pointing the Bit__Map__Offset (15:0) beyond the limit of the TSS segment. In the same manner, only a small portion of the 64K I/O space need have an associated map bit, by adjusting the TSS limit to truncate the bitmap. This eliminates the commitment of 8K of memory when a complete bitmap is not required, while allowing the fully general case if desired.

EXAMPLE OF BITMAP FOR I/O PORTS 0–255: Setting the TSS limit to {bit__Map__Offset + 31 +1**} [** see note below] will allow a 32-byte bitmap for the I/O ports #0–255, plus a terminator byte of all 1's [** see note below]. This allows the I/O bitmap to control I/O Permission to I/O port 0–255 while causing an exception 13 fault on attempted I/O to any I/O port 80256 through 65,565.

**IMPORTANT IMPLEMENTATION NOTE:** Beyond the last byte of I/O mapping information in the I/O Permission Bitmap **must** be a byte containing all 1's. The byte of all 1's must be within the limit of the Intel386 DX TSS segment (see Figure 4-15a).

### 4.6.5 Interrupt Handling

In order to fully support the emulation of an 8086 machine, interrupts in Virtual 8086 Mode are handled in a unique fashion. When running in Virtual Mode all interrupts and exceptions involve a privilege change back to the host Intel386 DX operating system. The Intel386 DX operating system determines if the interrupt comes from a Protected Mode application or from a Virtual Mode program by examining the VM bit in the EFLAGS image stored on the stack.

When a Virtual Mode program is interrupted and execution passes to the interrupt routine at level 0, the VM bit is cleared. However, the VM bit is still set in the EFLAG image on the stack.

The Intel386 DX operating system in turn handles the exception or interrupt and then returns control to the 8086 program. The Intel386 DX operating system may choose to let the 8086 operating system handle the interrupt or it may emulate the function of the interrupt handler. For example, many 8086 operating system calls are accessed by PUSHing parameters on the stack, and then executing an INT n instruction. If the IOPL is set to 0 then all INT n instructions will be intercepted by the Intel386 DX Microprocessor operating system. The Intel386 DX operating system could emulate the 8086 operating system's call. Figure 4-25 shows how the Intel386 DX operating system could intercept an 8086 operating system's call to "Open a File".

An Intel386 DX operating system can provide a Virtual 8086 Environment which is totally transparent to the application software via intercepting and then emulating 8086 operating system's calls, and intercepting IN and OUT instructions.

### 4.6.6 Entering and Leaving Virtual 8086 Mode

Virtual 8086 mode is entered by executing an IRET instruction (at CPL = 0), or Task Switch (at any CPL) to an Intel386 DX task whose Intel386 DX TSS has a FLAGS image containing a 1 in the VM bit position while the processor is executing in Protected Mode. That is, one way to enter Virtual 8086 mode is to switch to a task with an Intel386 DX TSS that has a 1 in the VM bit in the EFLAGS image. The other way is to execute a 32-bit IRET instruction at privilege level 0, where the stack has a 1 in the VM bit in the EFLAGS image. POPF does not affect the VM bit, even if the processor is in Protected Mode or level 0, and so cannot be used to enter Virtual 8086 Mode. PUSHF always pushes a 0 in the VM bit, even if the processor is in Virtual 8086 Mode, so that a program cannot tell if it is executing in REAL mode, or in Virtual 8086 mode.

The VM bit can be set by executing an IRET instruction only at privilege level 0, or by any instruction or Interrupt which causes a task switch in Protected Mode (with VM = 1 in the new FLAGS image), and can be cleared only by an interrupt or exception in Virtual 8086 Mode. IRET and POPF instructions executed in REAL mode or Virtual 8086 mode will not change the value in the VM bit.

The transition out of virtual 8086 mode to Intel386 DX protected mode occurs only on receipt of an interrupt or exception (such as due to a sensitive instruction). In Virtual 8086 mode, all interrupts and exceptions vector through the protected mode IDT, and enter an interrupt handler in protected Intel386 DX mode. That is, as part of interrupt processing, the VM bit is cleared.

Because the matching IRET must occur from level 0, if an Interrupt or Trap Gate is used to field an interrupt or exception out of Virtual 8086 mode, the Gate must perform an inter-level interrupt only to level 0. Interrupt or Trap Gates through conforming segments, or through segments with DPL > 0, will raise a GP fault with the CS selector as the error code.

#### 4.6.6.1 TASK SWITCHES TO/FROM VIRTUAL 8086 MODE

Tasks which can execute in virtual 8086 mode must be described by a TSS with the new Intel386 DX format (TYPE 9 or 11 descriptor).

A task switch out of virtual 8086 mode will operate exactly the same as any other task switch out of a task with an Intel386 DX TSS. All of the programmer visible state, including the FLAGS register with the VM bit set to 1, is stored in the TSS. The segment registers in the TSS will contain 8086 segment base values rather than selectors.

A task switch into a task described by an Intel386 DX TSS will have an additional check to determine if the incoming task should be resumed in virtual 8086 mode. Tasks described by 80286 format TSSs cannot be resumed in virtual 8086 mode, so no check is required there (the FLAGS image in 80286 format TSS has only the low order 16 FLAGS bits). Before loading the segment register images from an Intel386 DX TSS, the FLAGS image is loaded, so that the segment registers are loaded from the TSS image as 8086 segment base values. The task is now ready to resume in virtual 8086 execution mode.

#### 4.6.6.2 TRANSITIONS THROUGH TRAP AND INTERRUPT GATES, AND IRET

A task switch is one way to enter or exit virtual 8086 mode. The other method is to exit through a Trap or Interrupt gate, as part of handling an interrupt, and to enter as part of executing an IRET instruction. The transition out must use an Intel386 DX Trap Gate (Type 14), or Intel386 DX Interrupt Gate (Type 15), which must point to a non-conforming level 0 segment (DPL = 0) in order to permit the trap handler to IRET back to the Virtual 8086 program. The Gate must point to a non-conforming level 0 segment to perform a level switch to level 0 so that the matching IRET can change the VM bit. Intel386 DX gates must be used, since 80286 gates save only the low 16 bits of the FLAGS register, so that the VM bit will not be saved on transitions through the 80286 gates. Also, the 16-bit IRET (presumably) used to terminate the 80286 interrupt handler will pop only the lower 16 bits from FLAGS, and will not affect the VM bit. The action taken for an Intel386 DX Trap or Interrupt gate if an interrupt occurs while the task is executing in virtual 8086 mode is given by the following sequence.

(1) Save the FLAGS register in a temp to push later. Turn off the VM and TF bits, and if the interrupt is serviced by an Interrupt Gate, turn off IF also.

(2) Interrupt and Trap gates must perform a level switch from 3 (where the VM86 program executes) to level 0 (so IRET can return). This process involves a stack switch to the stack given in the TSS for privilege level 0. Save the Virtual 8086 Mode SS and ESP registers to push in a later step. The segment register load of SS will be done as a Protected Mode segment load, since the VM bit was turned off above.

(3) Push the 8086 segment register values onto the new stack, in the order: GS, FS, DS, ES. These are pushed as 32-bit quantities, with undefined values in the upper 16 bits. Then load these 4 registers with null selectors (0).

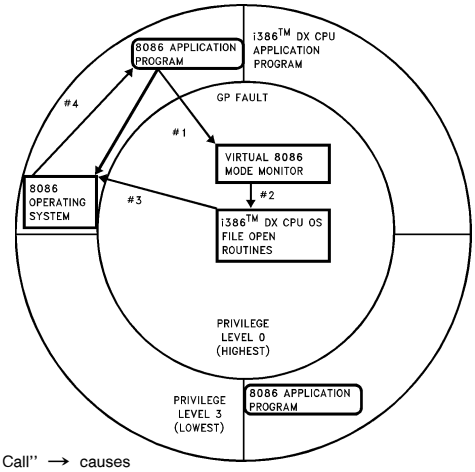


8086 Application makes "Open File Call" → causes
General Protection Fault (Arrow #1)
Virtual 8086 Monitor intercepts call. Calls Intel386™ DX OS (Arrow #2)
Intel386™ DX OS opens file returns control to 8086 OS (Arrow #3)
8086 OS returns control to application. (Arrow #4)
Transparent to Application

231630–70

**Figure 4-25. Virtual 8086 Environment Interrupt and Call Handling**

(4) Push the old 8086 stack pointer onto the new stack by pushing the SS register (as 32-bits, high bits undefined), then pushing the 32-bit ESP register saved above.

(5) Push the 32-bit FLAGS register saved in step 1.

(6) Push the old 8086 instruction pointer onto the new stack by pushing the CS register (as 32-bits, high bits undefined), then pushing the 32-bit EIP register.

(7) Load up the new CS:EIP value from the interrupt gate, and begin execution of the interrupt routine in protected Intel386 DX mode.

The transition out of virtual 8086 mode performs a level change and stack switch, in addition to changing back to protected mode. In addition, all of the 8086 segment register images are stored on the stack (behind the SS:ESP image), and then loaded with null (0) selectors before entering the interrupt handler. This will permit the handler to safely save and restore the DS, ES, FS, and GS registers as 80286 selectors. This is needed so that interrupt handlers which don't care about the mode of the interrupted program can use the same prolog and epilog code for state saving (i.e. push all registers in prolog, pop all in epilog) regardless of whether or not a "native" mode or Virtual 8086 mode program was interrupted. Restoring null selectors to these registers before executing the IRET will not cause a trap in the interrupt handler. Interrupt routines which expect values in the segment registers, or return values in segment registers will have to obtain/return values from the 8086 register images pushed onto the new stack. They will need to know the mode of the interrupted program in order to know where to find/return segment registers, and also to know how to interpret segment register values.

The IRET instruction will perform the inverse of the above sequence. Only the extended Intel386 DXs IRET instruction (operand size = 32) can be used, and must be executed at level 0 to change the VM bit to 1.

(1) If the NT bit in the FLAGs register is on, an intertask return is performed. The current state is stored in the current TSS, and the link field in the current TSS is used to locate the TSS for the interrupted task which is to be resumed.

Otherwise, continue with the following sequence.

(2) Read the FLAGS image from SS:8[ESP] into the FLAGS register. This will set VM to the value active in the interrupted routine.

(3) Pop off the instruction pointer CS:EIP. EIP is popped first, then a 32-bit word is popped which contains the CS value in the lower 16 bits. If VM = 0, this CS load is done as a protected mode segment load. If VM = 1, this will be done as an 8086 segment load.

(4) Increment the ESP register by 4 to bypass the FLAGS image which was "popped" in step 1.

(5) If VM = 1, load segment registers ES, DS, FS, and GS from memory locations SS:[ESP + 8], SS:[ESP + 12], SS:[ESP + 16], and SS:[ESP + 20], respectively, where the new val-

ue of ESP stored in step 4 is used. Since VM = 1, these are done as 8086 segment register loads.

Else if VM = 0, check that the selectors in ES, DS, FS, and GS are valid in the interrupted routine. Null out invalid selectors to trap if an attempt is made to access through them.

(6) If (RPL(CS) > CPL), pop the stack pointer SS:ESP from the stack. The ESP register is popped first, followed by 32-bits containing SS in the lower 16 bits. If VM = 0, SS is loaded as a protected mode segment register load. If VM = 1, an 8086 segment register load is used.

(7) Resume execution of the interrupted routine. The VM bit in the FLAGS register (restored from the interrupt routine's stack image in step 1) determines whether the processor resumes the interrupted routine in Protected mode of Virtual 8086 mode.

# 5. FUNCTIONAL DATA

## 5.1 INTRODUCTION

The Intel386 DX features a straightforward functional interface to the external hardware. The Intel386 DX has separate, parallel buses for data and address. The data bus is 32-bits in width, and bidirectional. The address bus outputs 32-bit address values in the most directly usable form for the high-speed local bus: 4 individual byte enable signals, and the 30 upper-order bits as a binary value. The data and address buses are interpreted and controlled with their associated control signals.

A **dynamic data bus sizing** feature allows the processor to handle a mix of 32- and 16-bit external buses on a cycle-by-cycle basis (see **5.3.4 Data Bus Sizing**). If 16-bit bus size is selected, the Intel386 DX automatically makes any adjustment needed, even performing another 16-bit bus cycle to complete the transfer if that is necessary. 8-bit peripheral devices may be connected to 32-bit or 16-bit buses with no loss of performance. A **new address pipelining option** is provided and applies to 32-bit and 16-bit buses for substantially improved memory utilization, especially for the most heavily used memory resources.

The **address pipelining option**, when selected, typically allows a given memory interface to operate with one less wait state than would otherwise be required (see **5.4.2 Address Pipelining**). The pipelined bus is also well suited to interleaved memory designs. When address pipelining is requested by the external hardware, the Intel386 DX will output the address and bus cycle definition of the next bus cycle (if it is internally available) even while waiting for the current cycle to be acknowledged.

Non-pipelined address timing, however, is ideal for external cache designs, since the cache memory will typically be fast enough to allow non-pipelined cycles. For maximum design flexibility, the address pipelining option is selectable on a cycle-by-cycle basis.

The processor's bus cycle is the basic mechanism for information transfer, either from system to processor, or from processor to system. Intel386 DX bus cycles perform data transfer in a minimum of only two clock periods. On a 32-bit data bus, the maximum Intel386 DX transfer bandwidth at 20 MHz is therefore 40 MBytes/sec, at 25 MHz bandwidth, is 50 Mbytes/sec, and at 33 MHz bandwidth, is 66 Mbytes/sec. Any bus cycle will be extended for more than two clock periods, however, if external hardware withholds acknowledgement of the cycle. At the appropriate time, acknowledgement is signalled by asserting the Intel386 DX READY# input.

The Intel386 DX can relinquish control of its local buses to allow mastership by other devices, such as direct memory access channels. When relinquished, HLDA is the only output pin driven by the Intel386 DX providing near-complete isolation of the processor from its system. The near-complete isolation characteristic is ideal when driving the system from test equipment, and in fault-tolerant applications.

Functional data covered in this chapter describes the processor's hardware interface. First, the set of signals available at the processor pins is described (see **5.2 Signal Description**). Following that are the signal waveforms occurring during bus cycles (see **5.3 Bus Transfer Mechanism**, **5.4 Bus Functional Description** and **5.5 Other Functional Descriptions**).

## 5.2 SIGNAL DESCRIPTION

### 5.2.1 Introduction

Ahead is a brief description of the Intel386 DX input and output signals arranged by functional groups. Note the # symbol at the end of a signal name indicates the active, or asserted, state occurs when the signal is at a low voltage. When no # is present after the signal name, the signal is asserted when at the high voltage level.

Example signal: M/IO# — High voltage indicates Memory selected
— Low voltage indicates I/O selected

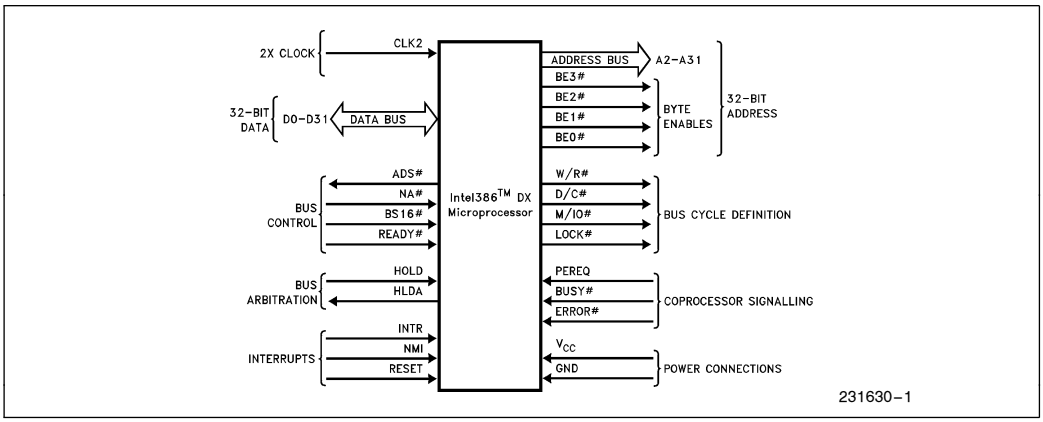


**Figure 5-1. Functional Signal Groups**

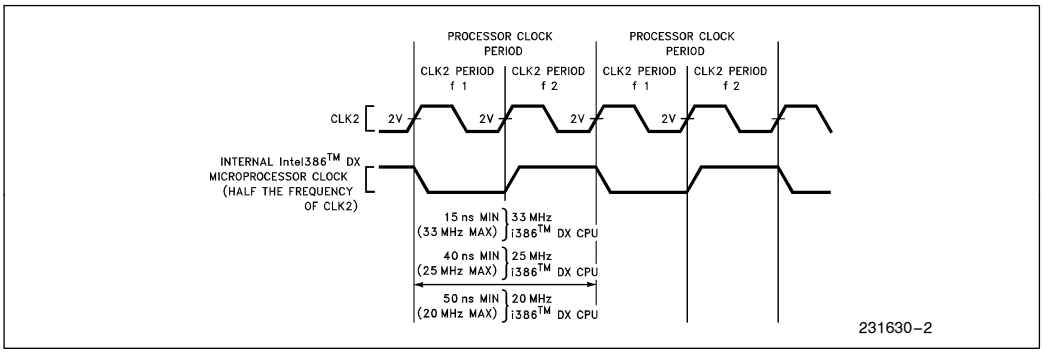


**Figure 5-2. CLK2 Signal and Internal Processor Clock**

The signal descriptions sometimes refer to AC timing parameters, such as "$t_{25}$ Reset Setup Time" and "$t_{26}$ Reset Hold Time." The values of these parameters can be found in Tables 7-4 and 7-5.

## 5.2.2 Clock (CLK2)

CLK2 provides the fundamental timing for the Intel386 DX. It is divided by two internally to generate the internal processor clock used for instruction execution. The internal clock is comprised of two phases, "phase one" and "phase two." Each CLK2 period is a phase of the internal clock. Figure 5-2 illustrates the relationship. If desired, the phase of the internal processor clock can be synchronized to a known phase by ensuring the RESET signal falling edge meets its applicable setup and hold times, $t_{25}$ and $t_{26}$.

## 5.2.3 Data Bus (D0 through D31)

These three-state bidirectional signals provide the general purpose data path between the Intel386 DX and other devices. Data bus inputs and outputs indicate "1" when HIGH. The data bus can transfer data on 32- and 16-bit buses using a data bus sizing feature controlled by the BS16# input. See section **5.2.6 Bus Contol**. Data bus reads require that read data setup and hold times $t_{21}$ and $t_{22}$ be met for correct operation. In addition, the Intel386 DX requires that all data bus pins be at a valid logic state (high or low) at the end of each read cycle, when READY# is asserted. During any write operation (and during halt cycles and shutdown cycles), the Intel386 DX always drives all 32 signals of the data bus even if the current bus size is 16-bits.

## 5.2.4 Address Bus (BE0# through BE3#, A2 through A31)

These three-state outputs provide physical memory addresses or I/O port addresses. The address bus is capable of addressing 4 gigabytes of physical memory space (00000000H through FFFFFFFFH), and 64 kilobytes of I/O address space (00000000H through 0000FFFFH) for programmed I/O. I/O

transfers automatically generated for Intel386 DX-to-coprocessor communication use I/O addresses 800000F8H through 800000FFH, so A31 HIGH in conjunction with M/IO# LOW allows simple generation of the coprocessor select signal.

The Byte Enable outputs, BE0#–BE3#, directly indicate which bytes of the 32-bit data bus are involved with the current transfer. This is most convenient for external hardware.

BE0# applies to D0–D7
BE1# applies to D8–D15
BE2# applies to D16–D23
BE3# applies to D24–D31

The number of Byte Enables asserted indicates the physical size of the operand being transferred (1, 2, 3, or 4 bytes). Refer to section **5.3.6 Operand Alignment**.

When a memory write cycle or I/O write cycle is in progress, and the operand being transferred occupies **only** the upper 16 bits of the data bus (D16–D31), duplicate data is simultaneously presented on the corresponding lower 16-bits of the data bus (D0–D15). This duplication is performed for optimum write performance on 16-bit buses. The pattern of write data duplication is a function of the Byte Enables asserted during the write cycle. Table 5-1 lists the write data present on D0–D31, as a function of the asserted Byte Enable outputs BE0#–BE3#.

### 5.2.5 Bus Cycle Definition Signals (W/R#, D/C#, M/IO#, LOCK#)

These three-state outputs define the type of bus cycle being performed. W/R# distinguishes between write and read cycles. D/C# distinguishes between data and control cycles. M/IO# distinguishes between memory and I/O cycles. LOCK# distinguishes between locked and unlocked bus cycles.

The primary bus cycle definition signals are W/R#, D/C# and M/IO#, since these are the signals driven valid as the ADS# (Address Status output) is driven asserted. The LOCK# is driven valid at the same time as the first locked bus cycle begins, which due to address pipelining, could be later than ADS# is driven asserted. See **5.4.3.4 Pipelined Address.** The LOCK# is negated when the READY# input terminates the last bus cycle which was locked.

Exact bus cycle definitions, as a function of W/R#, D/C#, and M/IO#, are given in Table 5-2. Note one combination of W/R#, D/C# and M/IO# is never given when ADS# is asserted (however, that combination, which is listed as ‘‘does not occur,’’ may occur during **idle** bus states when ADS# is **not** asserted). If M/IO#, D/C#, and W/R# are qualified by ADS# asserted, then a decoding scheme may be simplified by using this definition of the ‘‘does not occur’’ combination.

**Table 5-1. Write Data Duplication as a Function of BE0#–BE3#**

| Intel386™ DX Byte Enables | | | | Intel386™ DX Write Data | | | | Automatic Duplication? |
|---|---|---|---|---|---|---|---|---|
| BE3# | BE2# | BE1# | BE0# | D24–D31 | D16–D23 | D8–D15 | D0–D7 | |
| High | High | High | Low | undef | undef | undef | A | No |
| High | High | Low | High | undef | undef | B | undef | No |
| High | Low | High | High | undef | C | undef | C | Yes |
| Low | High | High | High | D | undef | D | undef | Yes |
| High | High | Low | Low | undef | undef | B | A | No |
| High | Low | Low | High | undef | C | B | undef | No |
| Low | Low | High | High | D | C | D | C | Yes |
| High | Low | Low | Low | undef | C | B | A | No |
| Low | Low | Low | High | D | C | B | undef | No |
| Low | Low | Low | Low | D | C | B | A | No |

Key:
D = logical write data d24–d31
C = logical write data d16–d23
B = logical write data d8–d15
A = logical write data d0–d7

**Table 5-2. Bus Cycle Definition**

| M/IO# | D/C# | W/R# | Bus Cycle Type | Locked? |
|---|---|---|---|---|
| Low | Low | Low | INTERRUPT ACKNOWLEDGE | Yes |
| Low | Low | High | does not occur | — |
| Low | High | Low | I/O DATA READ | No |
| Low | High | High | I/O DATA WRITE | No |
| High | Low | Low | MEMORY CODE READ | No |
| High | Low | High | HALT: Address = 2 (BE0# High, BE1# High, BE2# Low, BE3# High, A2–A31 Low)<br>SHUTDOWN: Address = 0 (BE0# Low, BE1# High, BE2# High, BE3# High, A2–A31 Low) | No |
| High | High | Low | MEMORY DATA READ | Some Cycles |
| High | High | High | MEMORY DATA WRITE | Some Cycles |

## 5.2.6 Bus Control Signals (ADS#, READY#, NA#, BS16#)

### 5.2.6.1 INTRODUCTION

The following signals allow the processor to indicate when a bus cycle has begun, and allow other system hardware to control address pipelining, data bus width and bus cycle termination.

### 5.2.6.2 ADDRESS STATUS (ADS#)

This three-state output indicates that a valid bus cycle definition, and address (W/R#, D/C#, M/IO#, BE0#–BE3#, and A2–A31) is being driven at the Intel386 DX pins. It is asserted during T1 and T2P bus states (see **5.4.3.2 Non-pipelined Address** and **5.4.3.4 Pipelined Address** for additional information on bus states).

### 5.2.6.3 TRANSFER ACKNOWLEDGE (READY#)

This input indicates the current bus cycle is complete, and the active bytes indicated by BE0#–BE3# and BS16# are accepted or provided. When READY# is sampled asserted during a read cycle or interrupt acknowledge cycle, the Intel386 DX latches the input data and terminates the cycle. When READY# is sampled asserted during a write cycle, the processor terminates the bus cycle.

READY# is ignored on the first bus state of all bus cycles, and sampled each bus state thereafter until asserted. READY# must eventually be asserted to acknowledge every bus cycle, including Halt Indication and Shutdown Indication bus cycles. When being sampled, READY must always meet setup and hold times $t_{19}$ and $t_{20}$ for correct operation. See all sections of **5.4 Bus Functional Description**.

### 5.2.6.4 NEXT ADDRESS REQUEST (NA#)

This is used to request address pipelining. This input indicates the system is prepared to accept new values of BE0#–BE3#, A2–A31, W/R#, D/C# and M/IO# from the Intel386 DX even if the end of the current cycle is not being acknowledged on READY#. If this input is asserted when sampled, the next address is driven onto the bus, provided the next bus request is already pending internally. See **5.4.2 Address Pipelining** and **5.4.3 Read and Write Cycles**. NA# must always meet setup and hold times, $t_{15}$ and $t_{16}$, for correct operation.

### 5.2.6.5 BUS SIZE 16 (BS16#)

The BS16# feature allows the Intel386 DX to directly connect to 32-bit and 16-bit data buses. Asserting this input constrains the current bus cycle to use only the lower-order half (D0–D15) of the data bus, corresponding to BE0# and BE1#. Asserting BS16# has no additional effect if only BE0# and/or BE1# are asserted in the current cycle. However, during bus cycles asserting BE2# or BE3#, asserting BS16# will automatically cause the Intel386 DX to make adjustments for correct transfer of the upper bytes(s) using only physical data signals D0–D15.

If the operand spans both halves of the data bus and BS16# is asserted, the Intel386 DX will automatically perform another 16-bit bus cycle. BS16# must always meet setup and hold times $t_{17}$ and $t_{18}$ for correct operation.

Intel386 DX I/O cycles are automatically generated for coprocessor communication. Since the Intel386 DX must transfer 32-bit quantities between itself and the Intel387 DX, BS16# *must not* be asserted during Intel387 DX communication cycles.

## 5.2.7 Bus Arbitration Signals (HOLD, HLDA)

### 5.2.7.1 INTRODUCTION

This section describes the mechanism by which the processor relinquishes control of its local buses when requested by another bus master device. See **5.5.1 Entering and Exiting Hold Acknowledge** for additional information.

### 5.2.7.2 BUS HOLD REQUEST (HOLD)

This input indicates some device other than the Intel386 DX requires bus mastership.

HOLD must remain asserted as long as any other device is a local bus master. HOLD is not recognized while RESET is asserted. If RESET is asserted while HOLD is asserted, RESET has priority and places the bus into an idle state, rather than the hold acknowledge (high impedance) state.

HOLD is level-sensitive and is a synchronous input. HOLD signals must always meet setup and hold times $t_{23}$ and $t_{24}$ for correct operation.

### 5.2.7.3 BUS HOLD ACKNOWLEDGE (HLDA)

Assertion of this output indicates the Intel386 DX has relinquished control of its local bus in response to HOLD asserted, and is in the bus Hold Acknowledge state.

The Hold Acknowledge state offers near-complete signal isolation. In the Hold Acknowledge state, HLDA is the only signal being driven by the Intel386 DX. The other output signals or bidirectional signals (D0–D31, BE0#–BE3#, A2–A31, W/R#, D/C#, M/IO#, LOCK# and ADS#) are in a high-impedance state so the requesting bus master may control them. Pullup resistors may be desired on several signals to avoid spurious activity when no bus master is driving them. See **7.2.3 Resistor Recommendations**. Also, one rising edge occuring on the NMI input during Hold Acknowledge is remembered, for processing after the HOLD input is negated.

In addition to the normal usage of Hold Acknowledge with DMA controllers or master peripherals, the near-complete isolation has particular attractiveness during system test when test equipment drives the system, and in hardware-fault-tolerant applications.

## 5.2.8 Coprocessor Interface Signals (PEREQ, BUSY#, ERROR#)

### 5.2.8.1 INTRODUCTION

In the following sections are descriptions of signals dedicated to the numeric coprocessor interface. In addition to the data bus, address bus, and bus cycle definition signals, these following signals control communication between the Intel386 DX and its Intel387 DX processor extension.

### 5.2.8.2 COPROCESSOR REQUEST (PEREQ)

When asserted, this input signal indicates a coprocessor request for a data operand to be transferred to/from memory by the Intel386 DX. In response, the Intel386 DX transfers information between the coprocessor and memory. Because the Intel386 DX has internally stored the coprocessor opcode being executed, it performs the requested data transfer with the correct direction and memory address.

PEREQ is level-sensitive and is allowed to be asynchronous to the CLK2 signal.

### 5.2.8.3 COPROCESSOR BUSY (BUSY#)

When asserted, this input indicates the coprocessor is still executing an instruction, and is not yet able to accept another. When the Intel386 DX encounters any coprocessor instruction which operates on the numeric stack (e.g. load, pop, or arithmetic operation), or the WAIT instruction, this input is first automatically sampled until it is seen to be negated. This sampling of the BUSY# input prevents overrunning the execution of a previous coprocessor instruction.

The FNINIT and FNCLEX coprocessor instructions are allowed to execute even if BUSY# is asserted, since these instructions are used for coprocessor initialization and exception-clearing.

BUSY# is level-sensitive and is allowed to be asynchronous to the CLK2 signal.

BUSY# serves an additional function. If BUSY# is sampled LOW at the falling edge of RESET, the Intel386 DX performs an internal self-test (see **5.5.3 Bus Activity During and Following Reset**). If BUSY# is sampled HIGH, no self-test is performed.

#### 5.2.8.4 COPROCESSOR ERROR (ERROR#)

This input signal indicates that the previous coprocessor instruction generated a coprocessor error of a type not masked by the coprocessor's control register. This input is automatically sampled by the Intel386 DX when a coprocessor instruction is encountered, and if asserted, the Intel386 DX generates exception 16 to access the error-handling software.

Several coprocessor instructions, generally those which clear the numeric error flags in the coprocessor or save coprocessor state, do execute without the Intel386 DX generating exception 16 even if ERROR# is asserted. These instructions are FNINIT, FNCLEX, FSTSW, FSTSWAX, FSTCW, FSTENV, FSAVE, FESTENV and FESAVE.

ERROR# is level-sensitive and is allowed to be asynchronous to the CLK2 signal.

### 5.2.9 Interrupt Signals (INTR, NMI, RESET)

#### 5.2.9.1 INTRODUCTION

The following descriptions cover inputs that can interrupt or suspend execution of the processor's current instruction stream.

#### 5.2.9.2 MASKABLE INTERRUPT REQUEST (INTR)

When asserted, this input indicates a request for interrupt service, which can be masked by the Intel386 DX Flag Register IF bit. When the Intel386 DX responds to the INTR input, it performs two interrupt acknowledge bus cycles, and at the end of the second, latches an 8-bit interrupt vector on D0–D7 to identify the source of the interrupt.

INTR is level-sensitive and is allowed to be asynchronous to the CLK2 signal. To assure recognition of an INTR request, INTR should remain asserted until the first interrupt acknowledge bus cycle begins.

#### 5.2.9.3 NON-MASKABLE INTERRUPT REQUEST (NMI)

This input indicates a request for interrupt service, which cannot be masked by software. The non-maskable interrupt request is always processed according to the pointer or gate in slot 2 of the interrupt table. Because of the fixed NMI slot assignment, no interrupt acknowledge cycles are perfomed when processing NMI.

NMI is rising edge-sensitive and is allowed to be asynchronous to the CLK2 signal. To assure recognition of NMI, it must be negated for at least eight CLK2 periods, and then be asserted for at least eight CLK2 periods.

Once NMI processing has begun, no additional NMI's are processed until after the next IRET instruction, which is typically the end of the NMI service routine. If NMI is re-asserted prior to that time, however, one rising edge on NMI will be remembered for processing after executing the next IRET instruction.

#### 5.2.9.4 RESET (RESET)

This input signal suspends any operation in progress and places the Intel386 DX in a known reset state. The Intel386 DX is reset by asserting RESET for 15 or more CLK2 periods (80 or more CLK2 periods before requesting self test). When RESET is asserted, all other input pins are ignored, and all other bus pins are driven to an idle bus state as shown in Table 5-3. If RESET and HOLD are both asserted at a point in time, RESET takes priority even if the Intel386 DX was in a Hold Acknowledge state prior to RESET asserted.

RESET is level-sensitive and must be synchronous to the CLK2 signal. If desired, the phase of the internal processor clock, and the entire Intel386 DX state can be completely synchronized to external circuitry by ensuring the RESET signal falling edge meets its applicable setup and hold times, $t_{25}$ and $t_{26}$.

**Table 5-3. Pin State (Bus Idle) During Reset**

| Pin Name | Signal Level During Reset |
|---|---|
| ADS# | High |
| D0–D31 | High Impedance |
| BE0#–BE3# | Low |
| A2–A31 | High |
| W/R# | Low |
| D/C# | High |
| M/IO# | Low |
| LOCK# | High |
| HLDA | Low |

### 5.2.10 Signal Summary

Table 5-4 summarizes the characteristics of all Intel386 DX signals.

**Table 5-4. Intel386™ DX Signal Summary**

| Signal Name | Signal Function | Active State | Input/ Output | Input Synch or Asynch to CLK2 | Output High Impedance During HLDA? |
|---|---|---|---|---|---|
| CLK2 | Clock | — | I | — | — |
| D0–D31 | Data Bus | High | I/O | S | Yes |
| BE0#–BE3# | Byte Enables | Low | O | — | Yes |
| A2–A31 | Address Bus | High | O | — | Yes |
| W/R# | Write-Read Indication | High | O | — | Yes |
| D/C# | Data-Control Indication | High | O | — | Yes |
| M/IO# | Memory-I/O Indication | High | O | — | Yes |
| LOCK# | Bus Lock Indication | Low | O | — | Yes |
| ADS# | Address Status | Low | O | — | Yes |
| NA# | Next Address Request | Low | I | S | — |
| BS16# | Bus Size 16 | Low | I | S | — |
| READY# | Transfer Acknowledge | Low | I | S | — |
| HOLD | Bus Hold Request | High | I | S | — |
| HLDA | Bus Hold Acknowledge | High | O | — | No |
| PEREQ | Coprocessor Request | High | I | A | — |
| BUSY# | Coprocessor Busy | Low | I | A | — |
| ERROR# | Coprocessor Error | Low | I | A | — |
| INTR | Maskable Interrupt Request | High | I | A | — |
| NMI | Non-Maskable Intrpt Request | High | I | A | — |
| RESET | Reset | High | I | S | — |

## 5.3 BUS TRANSFER MECHANISM

### 5.3.1 Introduction

All data transfers occur as a result of one or more bus cycles. Logical data operands of byte, word and double-word lengths may be transferred without restrictions on physical address alignment. Any byte boundary may be used, although two or even three physical bus cycles are performed as required for unaligned operand transfers. See **5.3.4 Dynamic Data Bus Sizing** and **5.3.6 Operand Alignment**.

The Intel386 DX address signals are designed to simplify external system hardware. Higher-order address bits are provided by A2–A31. Lower-order address in the form of BE0#–BE3# directly provides linear selects for the four bytes of the 32-bit data bus. Physical operand size information is thereby implicitly provided each bus cycle in the most usable form.

Byte Enable outputs BE0#–BE3# are asserted when their associated data bus bytes are involved with the present bus cycle, as listed in Table 5-5. During a bus cycle, any possible pattern of contiguous, asserted Byte Enable outputs can occur, but never patterns having a negated Byte Enable separating two or three asserted Enables.

Address bits A0 and A1 of the physical operand's base address can be created when necessary (for instance, for MULTIBUS I or MULTIBUS II interface), as a function of the lowest-order asserted Byte Enable. This is shown by Table 5-6. Logic to generate A0 and A1 is given by Figure 5-3.

**Table 5-5. Byte Enables and Associated Data and Operand Bytes**

| Byte Enable Signal | Associated Data Bus Signals |
|---|---|
| BE0# | D0–D7 (byte 0—least significant) |
| BE1# | D8–D15 (byte 1) |
| BE2# | D16–D23 (byte 2) |
| BE3# | D24–D31 (byte 3—most significant) |

**Table 5-6. Generating A0–A31 from BE0# –BE3# and A2–A31**

| Intel386™ DX Address Signals | | | | | | | | |
|---|---|---|---|---|---|---|---|---|
| A31 | ..... | A2 | | | BE3# | BE2# | BE1# | BE0# |
| | Physical Base Address | | | | | | | |
| A31 | ..... | A2 | A1 | A0 | | | | |
| A31 | ..... | A2 | 0 | 0 | X | X | X | Low |
| A31 | ..... | A2 | 0 | 1 | X | X | Low | High |
| A31 | ..... | A2 | 1 | 0 | X | Low | High | High |
| A31 | ..... | A2 | 1 | 1 | Low | High | High | High |

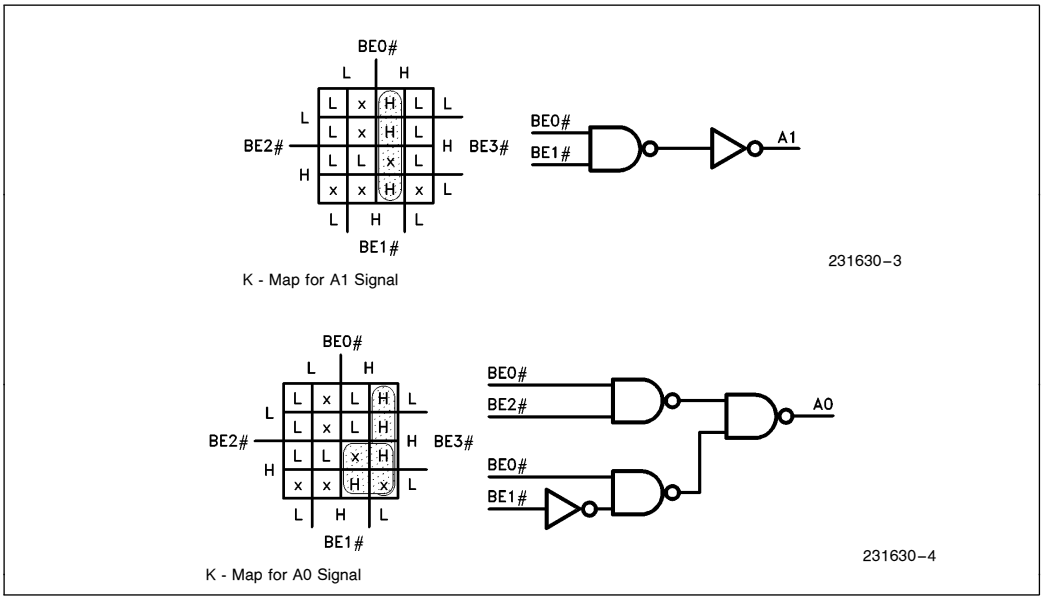


**Figure 5-3. Logic to Generate A0, A1 from BE0# –BE3#**

Each bus cycle is composed of at least two bus states. Each bus state requires one processor clock period. Additional bus states added to a single bus cycle are called wait states. See **5.4 Bus Functional Description**.

Since a bus cycle requires a minimum of two bus states (equal to two processor clock periods), data can be transferred between external devices and the Intel386 DX at a maximum rate of one 4-byte Dword every two processor clock periods, for a maximum bus bandwidth of 66 megabytes/second (Intel386 DX operating at 33 MHz processor clock rate).

## 5.3.2 Memory and I/O Spaces

Bus cycles may access physical memory space or I/O space. Peripheral devices in the system may either be memory-mapped, or I/O-mapped, or both. As shown in Figure 5-4, physical memory addresses range from 00000000H to FFFFFFFFH (4 gigabytes) and I/O addresses from 00000000H to 0000FFFFH (64 kilobytes) for programmed I/O. Note the I/O addresses used by the automatic I/O cycles for coprocessor communication are 800000F8H to 800000FFH, beyond the address range of programmed I/O, to allow easy generation of a coprocessor chip select signal using the A31 and M/IO# signals.

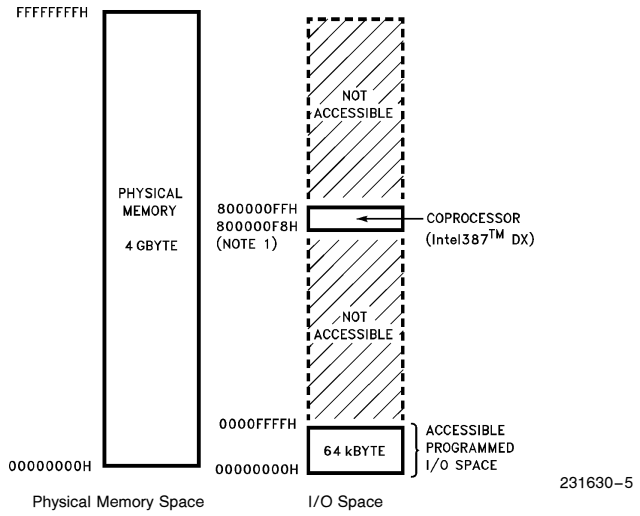


**NOTE:**
Since A31 is HIGH during automatic communication with coprocessor, A31 HIGH and M/IO# LOW can be used to easily generate a coprocessor select signal.

**Figure 5-4. Physical Memory and I/O Spaces**

## 5.3.3 Memory and I/O Organization

The Intel386 DX datapath to memory and I/O spaces can be 32 bits wide or 16 bits wide. When 32-bits wide, memory and I/O spaces are organized naturally as arrays of physical 32-bit Dwords. Each memory or I/O Dword has four individually addressable bytes at consecutive byte addresses. The lowest-addressed byte is associated with data signals D0–D7; the highest-addressed byte with D24–D31.

The Intel386 DX includes a bus control input, BS16#, that also allows direct connection to 16-bit memory or I/O spaces organized as a sequence of 16-bit words. Cycles to 32-bit and 16-bit memory or I/O devices may occur in any sequence, since the BS16# control is sampled during each bus cycle. See **5.3.4 Dynamic Data Bus Sizing**. The Byte Enable signals, BE0#–BE3#, allow byte granularity when addressing any memory or I/O structure, whether 32 or 16 bits wide.

## 5.3.4 Dynamic Data Bus Sizing

Dynamic data bus sizing is a feature allowing direct processor connection to 32-bit or 16-bit data buses for memory or I/O. A single processor may connect to both size buses. Transfers to or from 32- or 16-bit ports are supported by dynamically determining the bus width during each bus cycle. During each bus cycle an address decoding circuit or the slave device itself may assert BS16# for 16-bit ports, or negate BS16# for 32-bit ports.

With BS16# asserted, the processor automatically converts operand transfers larger than 16 bits, or misaligned 16-bit transfers, into two or three transfers as required. All operand transfers physically occur on D0–D15 when BS16# is asserted. Therefore, 16-bit memories or I/O devices only connect on data signals D0–D15. No extra transceivers are required.

Asserting BS16# only affects the processor when BE2# and/or BE3# are asserted during the current cycle. If only D0–D15 are involved with the transfer, asserting BS16# has no affect since the transfer can proceed normally over a 16-bit bus whether BS16# is asserted or not. In other words, asserting BS16# has no effect when only the lower half of the bus is involved with the current cycle.

There are two types of situations where the processor is affected by asserting BS16#, depending on which Byte Enables are asserted during the current bus cycle:

Upper Half Only:
Only BE2# and/or BE3# asserted.

Upper and Lower Half:
At least BE1#, BE2# asserted (and perhaps also BE0# and/or BE3#).

Effect of asserting BS16# during ‘‘upper half only’’ read cycles:

Asserting BS16# during ‘‘upper half only’’ reads causes the Intel386 DX to read data on the lower 16 bits of the data bus and ignore data on the upper 16 bits of the data bus. Data that would have been read from D16–D31 (as indicated by BE2# and BE3#) will instead be read from D0–D15 respectively.

Effect of asserting BS16# during ‘‘upper half only’’ write cycles:

Asserting BS16# during ‘‘upper half only’’ writes does not affect the Intel386 DX. When only BE2# and/or BE3# are asserted during a write cycle the Intel386 DX always duplicates data signals D16–D31 onto D0–D15 (see Table 5-1). Therefore, no further Intel386 DX action is required to perform these writes on 32-bit or 16-bit buses.

Effect of asserting BS16# during ‘‘upper and lower half’’ read cycles:

Asserting BS16# during ‘‘upper and lower half’’ reads causes the processor to perform two 16-bit read cycles for complete physical operand transfer. Bytes 0 and 1 (as indicated by BE0# and BE1#) are read on the first cycle using D0–D15. Bytes 2 and 3 (as indicated by BE2# and BE3#) are read during the second cycle, again using D0–D15. D16–D31 are ignored during both 16-bit cycles. BE0# and BE1# are always negated during the second 16-bit cycle (See **Figure 5-14, cycles 2 and 2a**).

Effect of asserting BS16# during ‘‘upper and lower half’’ write cycles:

Asserting BS16# during ‘‘upper and lower half’’ writes causes the Intel386 DX to perform two 16-bit write cycles for complete physical operand transfer. All bytes are available the first write cycle allowing external hardware to receive Bytes 0 and 1 (as indicated by BE0# and BE1#) using D0–D15. On the second cycle the Intel386 DX duplicates Bytes 2 and 3 on D0–D15 and Bytes 2 and 3 (as indicated by BE2# and BE3#) are written using D0–D15. BE0# and BE1# are always negated during the second 16-bit cycle. BS16# must be asserted during the second 16-bit cycle. See **Figure 5-14, cycles 1 and 1a**.

### 5.3.5 Interfacing with 32- and 16-Bit Memories

In 32-bit-wide physical memories such as Figure 5-5, each physical Dword begins at a byte address that is a multiple of 4. A2–A31 are directly used as a Dword select and BE0#–BE3# as byte selects. BS16# is negated for all bus cycles involving the 32-bit array.

When 16-bit-wide physical arrays are included in the system, as in Figure 5-6, each 16-bit physical word begins at a address that is a multiple of 2. Note the address is decoded, to assert BS16# only during bus cycles involving the 16-bit array. (If desiring to

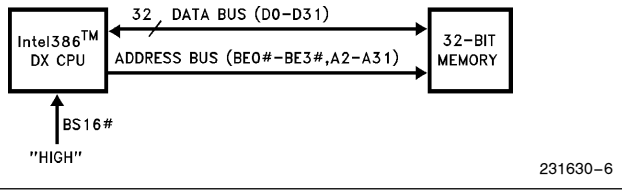


**Figure 5-5. Intel386™ DX with 32-Bit Memory**

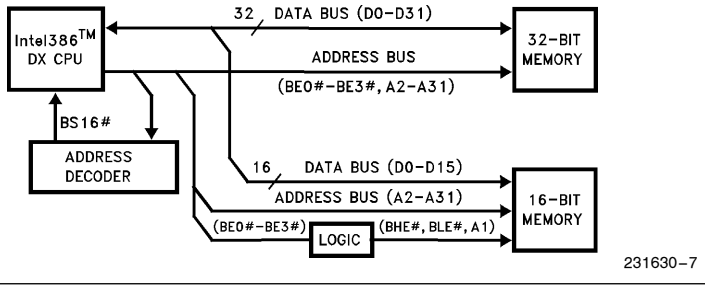


**Figure 5-6. Intel386™ DX with 32-Bit and 16-Bit Memory**

use pipelined address with 16-bit memories then BE0#–BE3# and W/R# are also decoded to determine when BS16# should be asserted. See **5.4.3.6 Pipelined Address with Dynamic Data Bus Sizing**.)

A2–A31 are directly usable for addressing 32-bit and 16-bit devices. To address 16-bit devices, A1 and two byte enable signals are also needed.

To generate an A1 signal and two Byte Enable signals for 16-bit access, BE0#–BE3# should be decoded as in Table 5-7. Note certain combinations of BE0#–BE3# are never generated by the Intel386 DX, leading to ''don't care'' conditions in the decoder. Any BE0#–BE3# decoder, such as Figure 5-7, may use the non-occurring BE0#–BE3# combinations to its best advantage.

### 5.3.6 Operand Alignment

With the flexibility of memory addressing on the Intel386 DX, it is possible to transfer a logical operand that spans more than one physical Dword or word of memory or I/O. Examples are 32-bit Dword operands beginning at addresses not evenly divisible by 4, or a 16-bit word operand split between two physical Dwords of the memory array.

Operand alignment and data bus size dictate when multiple bus cycles are required. Table 5-8 describes the transfer cycles generated for all combinations of logical operand lengths, alignment, and data bus sizing. When multiple bus cycles are required to transfer a multi-byte logical operand, the highest-order bytes are transferred first (but if BS16# asserted requires two 16-bit cycles be performed, that part of the transfer is low-order first).

## 5.4 BUS FUNCTIONAL DESCRIPTION

### 5.4.1 Introduction

The Intel386 DX has separate, parallel buses for data and address. The data bus is 32-bits in width, and bidirectional. The address bus provides a 32-bit value using 30 signals for the 30 upper-order address bits and 4 Byte Enable signals to directly indicate the active bytes. These buses are interpreted and controlled via several associated definition or control signals.

**Table 5-7. Generating A1, BHE# and BLE# for Addressing 16-Bit Devices**

| Intel386™ DX Signals | | | | 16-Bit Bus Signals | | | Comments |
|---|---|---|---|---|---|---|---|
| BE3# | BE2# | BE1# | BE0# | A1 | BHE# | BLE# (A0) | |
| H* | H* | H* | H* | x | x | x | x—no active bytes |
| H | H | H | L | L | H | L | |
| H | H | L | H | L | L | H | |
| H | H | L | L | L | L | L | |
| H | L | H | H | H | H | L | |
| H* | L* | H* | L* | x | x | x | x—not contiguous bytes |
| H | L | L | H | L | L | H | |
| H | L | L | L | L | L | L | |
| L | H | H | H | H | L | H | |
| L* | H* | H* | L* | x | x | x | x—not contiguous bytes |
| L* | H* | L* | H* | x | x | x | x—not contiguous bytes |
| L* | H* | L* | L* | x | x | x | x—not contiguous bytes |
| L | L | H | H | H | L | L | |
| L* | L* | H* | L* | x | x | x | x—not continguous bytes |
| L | L | L | H | L | L | H | |
| L | L | L | L | L | L | L | |

BLE# asserted when D0–D7 of 16-bit bus is active.
BHE# asserted when D8–D15 of 16-bit bus is active.
A1 low for all even words; A1 high for all odd words.

Key:
x = don't care
H = high voltage level
L = low voltage level
* = a non-occurring pattern of Byte Enables; either none are asserted, or the pattern has Byte Enables asserted for non-contiguous bytes

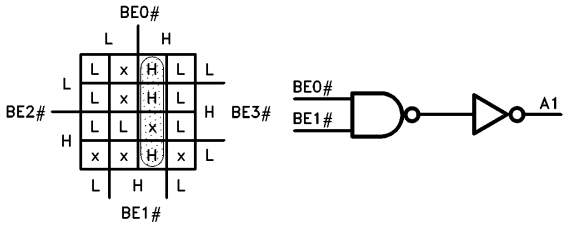


231630–8

K-map for A1 signal (same as Figure 5-3)

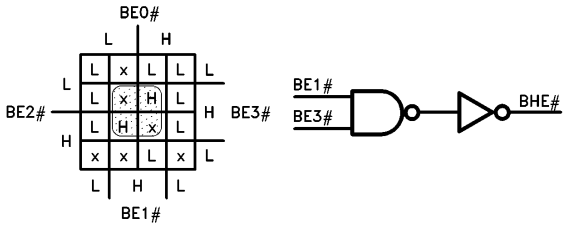


231630–9

K-map for 16-bit BHE# signal

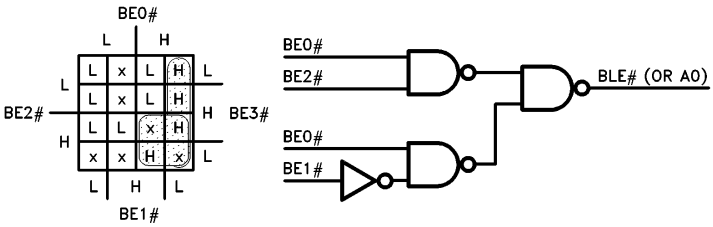


231630–10

K-map for 16-bit BLE# signal (same as A0 signal in Figure 5-3)

**Figure 5-7. Logic to Generate A1, BHE# and BLE# for 16-Bit Buses**

**Table 5-8. Transfer Bus Cycles for Bytes, Words and Dwords**

| | Byte-Length of Logical Operand | | | | | | | | |
|---|---|---|---|---|---|---|---|---|---|
| | 1 | 2 | | | | 4 | | | |
| Physical Byte Address in Memory (low-order bits) | xx | 00 | 01 | 10 | 11 | 00 | 01 | 10 | 11 |
| Transfer Cycles over 32-Bit Data Bus | b | w | w | w | hb,* lb | d | hb l3 | hw, lw | h3, lb |
| Transfer Cycles over 16-Bit Data Bus | b | w | lb, hb | w | hb, lb | lw, hw | hb, lb, mw | hw, lw | mw, hb, lb |

Key: b = byte transfer; w = word transfer; l = low-order portion; m = mid-order portion; x = don't care; 3 = 3-byte transfer; d = Dword transfer; h = high-order portion; = BS16# asserted causes second bus cycle

*For this case, 8086, 8088, 80186, 80188, 80286 transfer lb first, then hb.

The definition of each bus cycle is given by three definition signals: M/IO#, W/R# and D/C#. At the same time, a valid address is present on the byte enable signals BE0#–BE3# and other address signals A2–A31. A status signal, ADS#, indicates when the Intel386 DX issues a new bus cycle definition and address.

Collectively, the address bus, data bus and all associated control signals are referred to simply as ''the bus''.

When active, the bus performs one of the bus cycles below:

1) read from memory space
2) locked read from memory space
3) write to memory space
4) locked write to memory space
5) read from I/O space (or coprocessor)
6) write to I/O space (or coprocessor)
7) interrupt acknowledge
8) indicate halt, or indicate shutdown

Table 5-2 shows the encoding of the bus cycle definition signals for each bus cycle. See section **5.2.5 Bus Cycle Definition**.

The data bus has a dynamic sizing feature supporting 32- and 16-bit bus size. Data bus size is indicated to the Intel386 DX using its Bus Size 16 (BS16#) input. All bus functions can be performed with either data bus size.

When the Intel386 DX bus is not performing one of the activities listed above, it is either Idle or in the Hold Acknowledge state, which may be detected by external circuitry. The idle state can be identified by the Intel386 DX giving no further assertions on its address strobe output (ADS#) since the beginning of its most recent bus cycle, and the most recent bus cycle has been terminated. The hold acknowledge state is identified by the Intel386 DX asserting its hold acknowledge (HLDA) output.

The shortest time unit of bus activity is a bus state. A bus state is one processor clock period (two CLK2 periods) in duration. A complete data transfer occurs during a bus cycle, composed of two or more bus states.

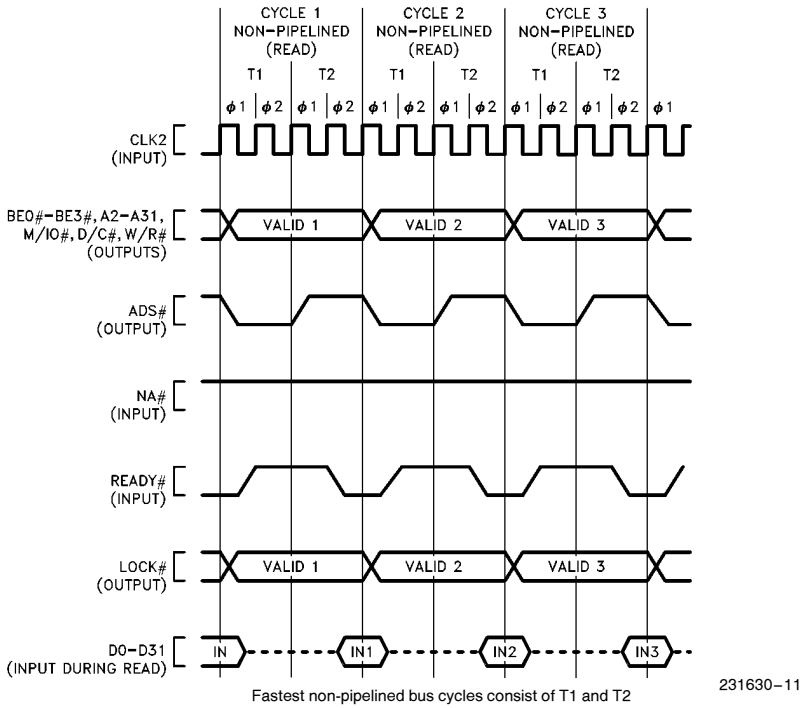


Fastest non-pipelined bus cycles consist of T1 and T2

**Figure 5-8. Fastest Read Cycles with Non-Pipelined Address Timing**

The fastest Intel386 DX bus cycle requires only two bus states. For example, three consecutive bus read cycles, each consisting of two bus states, are shown by Figure 5-8. The bus states in each cycle are named **T1** and **T2**. Any memory or I/O address may be accessed by such a two-state bus cycle, if the external hardware is fast enough. The high-bandwidth, two-clock bus cycle realizes the full potential of fast main memory, or cache memory.

Every bus cycle continues until it is acknowledged by the external system hardware, using the Intel386 DX READY# input. Acknowledging the bus cycle at the end of the first T2 results in the shortest bus cycle, requiring only T1 and T2. If READY# is not immediately asserted, however, T2 states are repeated indefinitely until the READY# input is sampled asserted.

### 5.4.2 Address Pipelining

The address pipelining option provides a choice of bus cycle timings. Pipelined or non-pipelined address timing is selectable on a cycle-by-cycle basis with the Next Address (NA#) input.

When address pipelining is not selected, the current address and bus cycle definition remain stable throughout the bus cycle.

When address pipelining is selected, the address (BE0#–BE3#, A2–A31) and definition (W/R#, D/C# and M/IO#) of the next cycle are available before the end of the current cycle. To signal their availability, the Intel386 DX address status output (ADS#) is also asserted. Figure 5-9 illustrates the fastest read cycles with pipelined address timing.

Note from Figure 5-9 the fastest bus cycles using pipelined address require only two bus states, named **T1P** and **T2P**. Therefore cycles with pipelined address timing allow the same data bandwidth as non-pipelined cycles, but address-to-data access time is increased compared to that of a non-pipelined cycle.

By increasing the address-to-data access time, pipelined address timing reduces wait state requirements. For example, if one wait state is required with non-pipelined address timing, no wait states would be required with pipelined address.

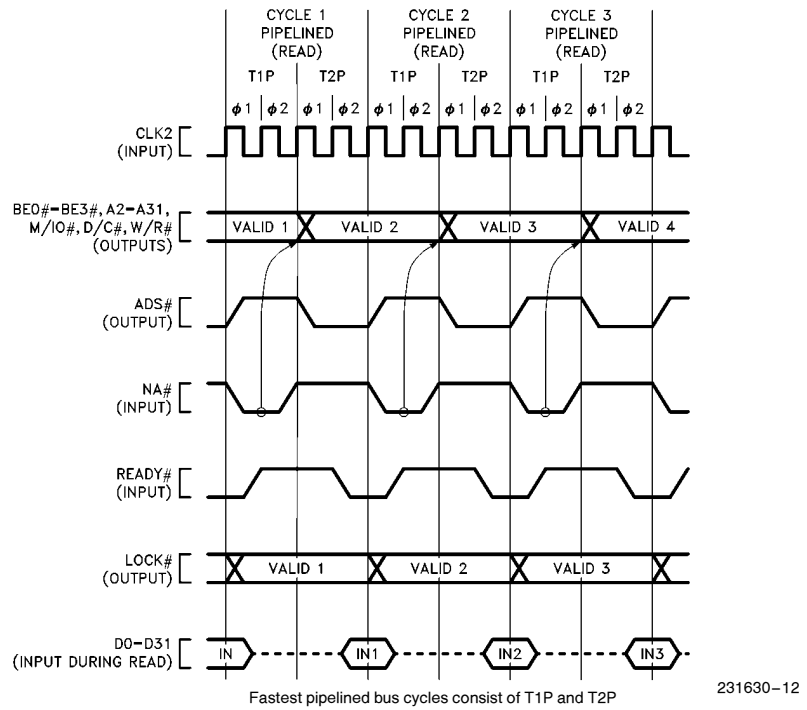


Fastest pipelined bus cycles consist of T1P and T2P

231630–12

**Figure 5-9. Fastest Read Cycles with Pipelined Address Timing**

Pipelined address timing is useful in typical systems having address latches. In those systems, once an address has been latched, pipelined availability of the next address allows decoding circuitry to generate chip selects (and other necessary select signals) in advance, so selected devices are accessed immediately when the next cycle begins. In other words, the decode time for the next cycle can be overlapped with the end of the current cycle.

If a system contains a memory structure of two or more interleaved memory banks, pipelined address timing potentially allows even more overlap of activity. This is true when the interleaved memory controller is designed to allow the next memory operation to begin in one memory bank while the current bus cycle is still activating another memory bank. Figure 5-10 shows the general structure of the Intel386 DX with 2-bank and 4-bank interleaved memory. Note each memory bank of the interleaved memory has full data bus width (32-bit data width typically, unless 16-bit bus size is selected).

Further details of pipelined address timing are given in **5.4.3.4 Pipelined Address, 5.4.3.5 Initiating and Maintaining Pipelined Address, 5.4.3.6 Pipelined Address with Dynamic Bus Sizing,** and **5.4.3.7 Maximum Pipelined Address Usage with 16-Bit Bus Size**.

**TWO-BANK INTERLEAVED MEMORY**

a) Address signal A2 selects bank

b) 32-bit datapath to each bank

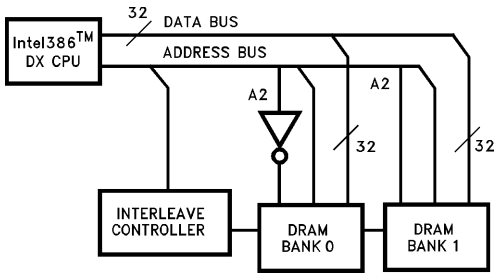


231630–13

**FOUR-BANK INTERLEAVED MEMORY**

a) Address signals A3 and A2 select bank

b) 32-bit datapath to each bank

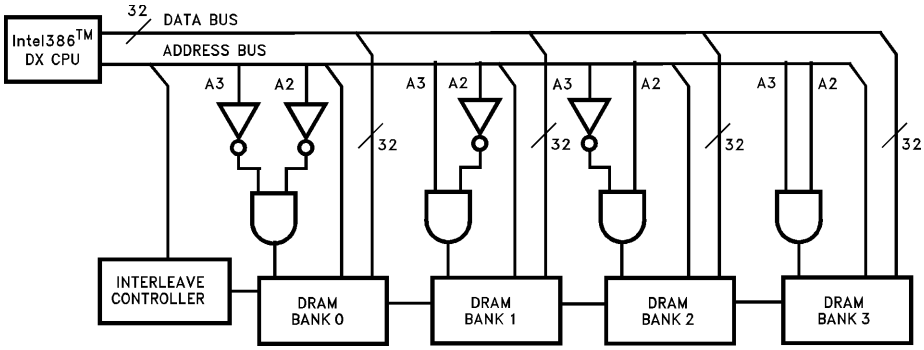


231630–14

**Figure 5-10. 2-Bank and 4-Bank Interleaved Memory Structure**

## 5.4.3 Read and Write Cycles

### 5.4.3.1 INTRODUCTION

Data transfers occur as a result of bus cycles, classified as read or write cycles. During read cycles, data is transferred from an external device to the processor. During write cycles data is transferred in the other direction, from the processor to an external device.

Two choices of address timing are dynamically selectable: non-pipelined, or pipelined. After a bus idle state, the processor always uses non-pipelined address timing. However, the NA# (Next Address) input may be asserted to select pipelined address timing for the next bus cycle. When pipelining is selected and the Intel386 DX has a bus request pending internally, the address and definition of the next cycle is made available even before the current bus cycle is acknowledged by READY#. Generally, the NA# input is sampled each bus cycle to select the desired address timing for the next bus cycle.

Two choices of physical data bus width are dynamically selectable: 32 bits, or 16 bits. Generally, the BS16# (Bus Size 16) input is sampled near the end of the bus cycle to confirm the physical data bus size applicable to the current cycle. Negation of BS16# indicates a 32-bit size, and assertion indicates a 16-bit bus size.

If 16-bit bus size is indicated, the Intel386 DX automatically responds as required to complete the transfer on a 16-bit data bus. Depending on the size and alignment of the operand, another 16-bit bus cycle may be required. Table 5-7 provides all details. When necessary, the Intel386 DX performs an additional 16-bit bus cycle, using D0–D15 in place of D16–D31.

Terminating a read cycle or write cycle, like any bus cycle, requires acknowledging the cycle by asserting the READY# input. Until acknowledged, the processor inserts wait states into the bus cycle, to allow adjustment for the speed of any external device. External hardware, which has decoded the address and bus cycle type asserts the READY# input at the appropriate time.

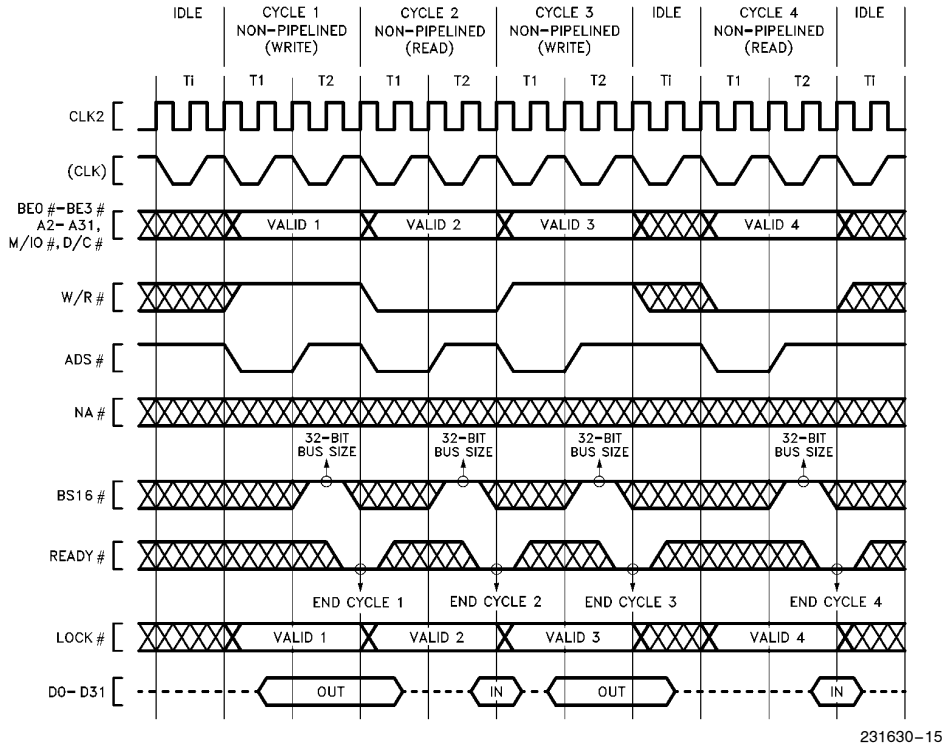


Idle states are shown here for diagram variety only. Write cycles are **not** always followed by an idle state. An active bus cycle can immediately follow the write cycle.

**Figure 5-11. Various Bus Cycles and Idle States with Non-Pipelined Address (zero wait states)**

At the end of the second bus state within the bus cycle, READY# is sampled. At that time, if external hardware acknowledges the bus cycle by asserting READY#, the bus cycle terminates as shown in Figure 5-11. If READY# is negated as in Figure 5-12, the cycle continues another bus state (a wait state) and READY# is sampled again at the end of that state. This continues indefinitely until the cycle is acknowledged by READY# asserted.

When the current cycle is acknowledged, the Intel386 DX terminates it. When a read cycle is acknowledged, the Intel386 DX latches the information present at its data pins. When a write cycle is acknowledged, the Intel386 DX write data remains valid throughout phase one of the next bus state, to provide write data hold time.

#### 5.4.3.2 NON-PIPELINED ADDRESS

Any bus cycle may be performed with non-pipelined address timing. For example, Figure 5-11 shows a mixture of read and write cycles with non-pipelined address timing. Figure 5-11 shows the fastest possible cycles with non-pipelined address have two bus states per bus cycle. The states are named T1 and T2. In phase one of the T1, the address signals and bus cycle definition signals are driven valid, and to signal their availability, address status (ADS#) is simultaneously asserted.

During read or write cycles, the data bus behaves as follows. If the cycle is a read, the Intel386 DX floats its data signals to allow driving by the external device being addressed. **The Intel386 DX requires that all data bus pins be at a valid logic state (high or low) at the end of each read cycle, when READY# is asserted, even if all byte enables are not asserted. The system MUST be designed to meet this requirement.** If the cycle is a write, data signals are driven by the Intel386 DX beginning in phase two of T1 until phase one of the bus state following cycle acknowledgment.

Figure 5-12 illustrates non-pipelined bus cycles with one wait added to cycles 2 and 3. READY# is sampled negated at the end of the first T2 in cycles 2 and 3. Therefore cycles 2 and 3 have T2 repeated. At the end of the second T2, READY# is sampled asserted.

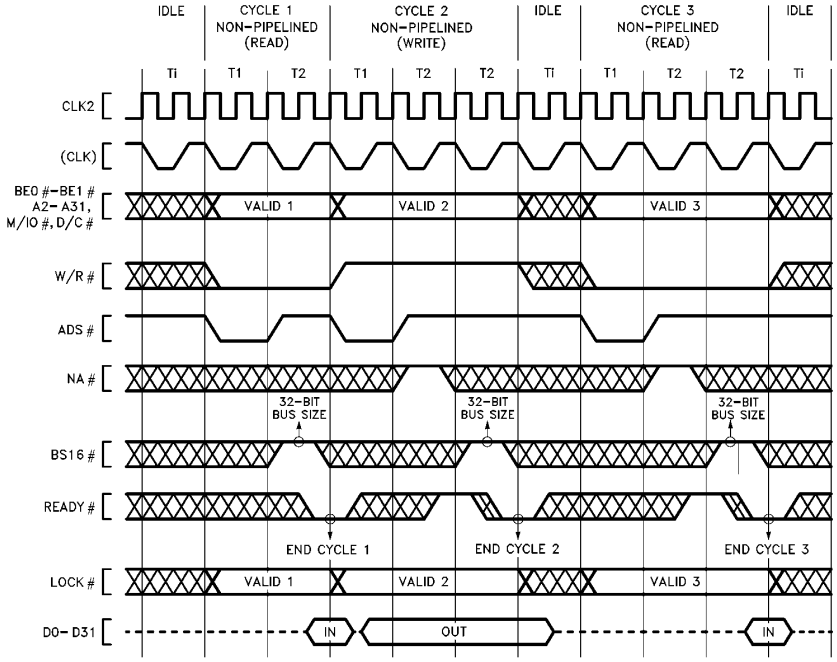


231630–16

Idle states are shown here for diagram variety only. Write cycles are **not** always followed by an idle state. An active bus cycle can immediately follow the write cycle.

**Figure 5-12. Various Bus Cycles and Idle States with Non-Pipelined Address (various number of wait states)**

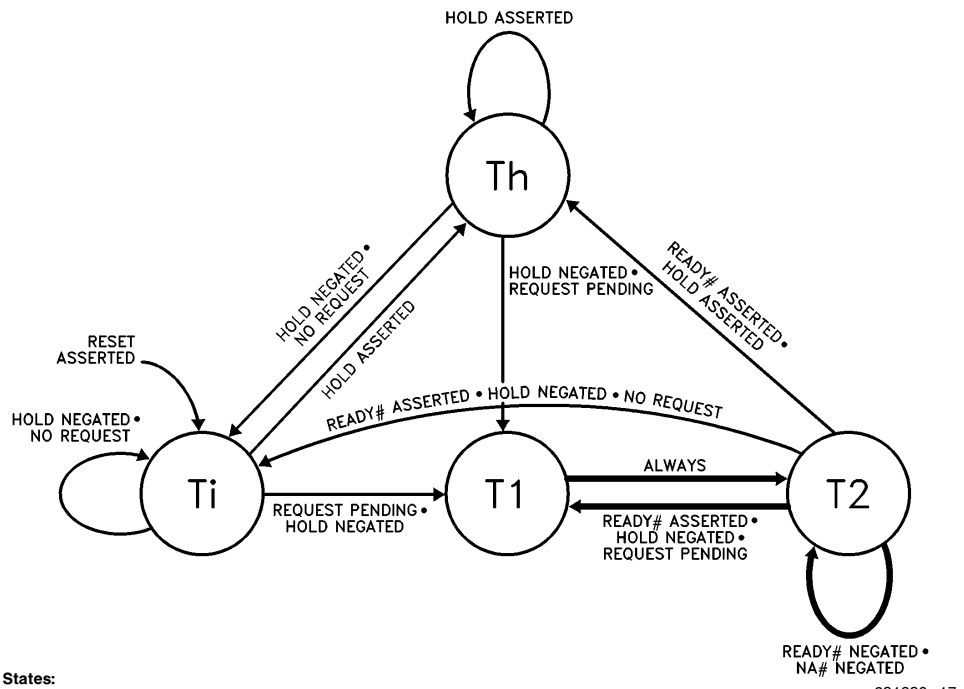


**Bus States:**
T1—first clock of a non-pipelined bus cycle (Intel386 DX drives new address and asserts ADS#)
T2—subsequent clocks of a bus cycle when NA# has not been sampled asserted in the current bus cycle
Ti— idle state
Th—hold acknowledge state (Intel386 DX asserts HLDA)
The fastest bus cycle consists of two states: T1 and T2.
Four basic bus states describe bus operation when not using pipelined address. These states do include BS16# usage for 32-bit and 16-bit bus size. If asserting BS16# requires a second 16-bit bus cycle to be performed, it is performed before HOLD asserted is acknowledged.

**Figure 5-13. Intel386™ DX Bus States (not using pipelined address)**

When address pipelining is not used, the address and bus cycle definition remain valid during all wait states. When wait states are added and you desire to maintain non-pipelined address timing, it is necessary to negate NA# during each T2 state except the last one, as shown in Figure 5-12 cycles 2 and 3. If NA# is sampled asserted during a T2 other than the last one, the next state would be T2I (for pipelined address) or T2P (for pipelined address) instead of another T2 (for non-pipelined address).

When address pipelining is not used, the bus states and transitions are completely illustrated by Figure 5-13. The bus transitions between four possible states: T1, T2, Ti, and Th. Bus cycles consist of T1 and T2, with T2 being repeated for wait states. Otherwise, the bus may be idle, in the Ti state, or in hold acknowledge, the Th state.

When address pipelining is not used, the bus state diagram is as shown in Figure 5-13. When the bus is idle it is in state Ti. Bus cycles always begin with T1. T1 always leads to T2. If a bus cycle is not acknowledged during T2 and NA# is negated, T2 is repeated. When a cycle is acknowledged during T2, the following state will be T1 of the next bus cycle if a bus request is pending internally, or Ti if there is no bus request pending, or Th if the HOLD input is being asserted.

The bus state diagram in Figure 5-13 also applies to the use of BS16#. If the Intel386 DX makes internal adjustments for 16-bit bus size, the adjustments do not affect the external bus states. If an additional 16-bit bus cycle is required to complete a transfer on a 16-bit bus, it also follows the state transitions shown in Figure 5-13.

Use of pipelined address allows the Intel386 DX to enter three additional bus states not shown in Figure 5-13. Figure 5-20 in **5.4.3.4 Pipelined Address** is the complete bus state diagram, including pipelined address cycles.

### 5.4.3.3 NON-PIPELINED ADDRESS WITH DYNAMIC DATA BUS SIZING

The physical data bus width for any non-pipelined bus cycle can be either 32-bits or 16-bits. At the beginning of the bus cycle, the processor behaves as if the data bus is 32-bits wide. When the bus cycle is acknowledged, by asserting READY# at the end of a T2 state, the most recent sampling of BS16# determines the data bus size for the cycle being acknowledged. If BS16# was most recently negated, the physical data bus size is defined as 32 bits. If BS16# was most recently asserted, the size is defined as 16 bits.

When BS16# is asserted and two 16-bit bus cycles are required to complete the transfer, BS16# must be asserted during the second cycle; 16-bit bus size is not assumed. Like any bus cycle, the second 16-bit cycle must be acknowledged by asserting READY#.

When a second 16-bit bus cycle is required to complete the transfer over a 16-bit bus, the addresses

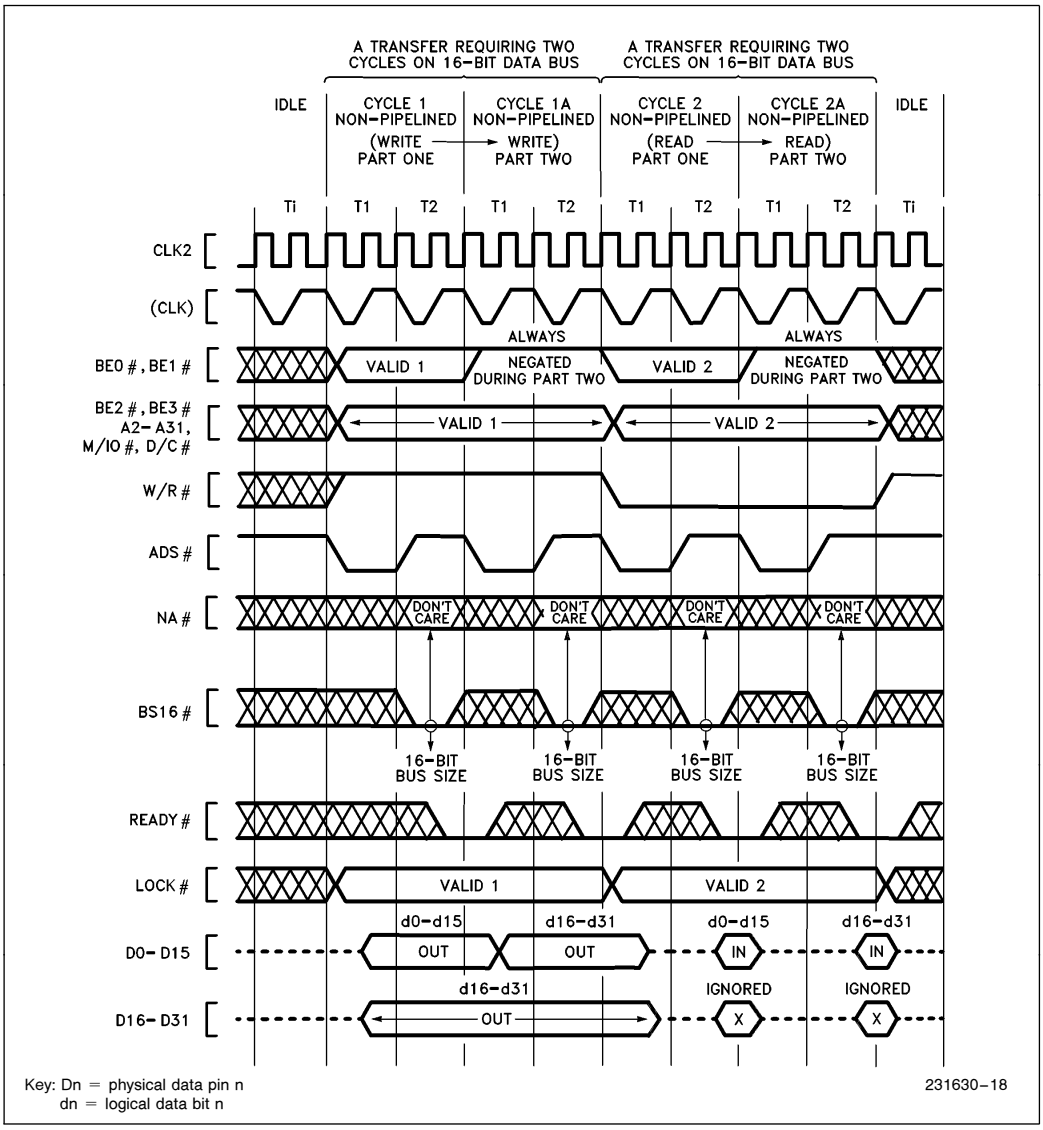


**Figure 5-14. Asserting BS16# (zero wait states, non-pipelined address)**

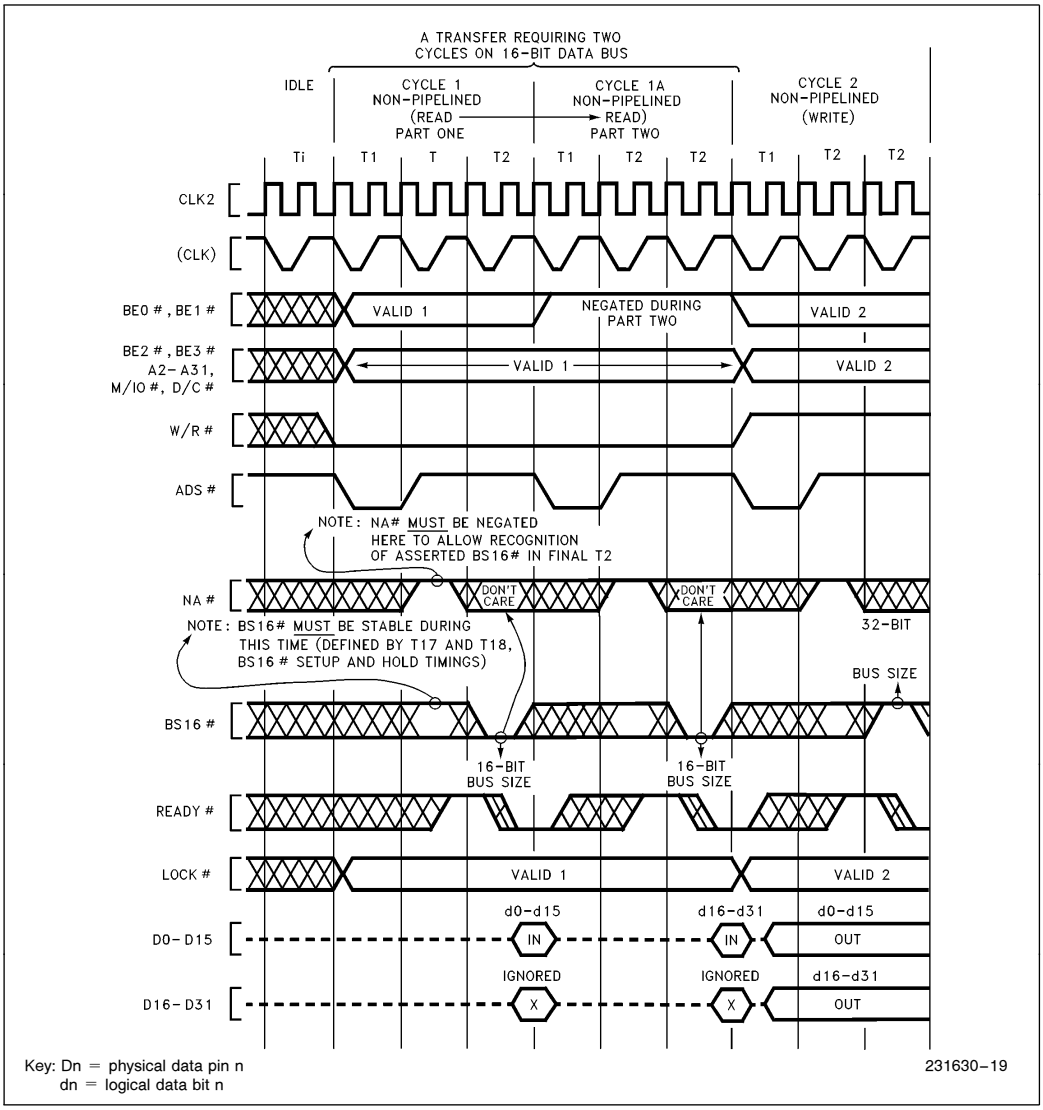


**Figure 5-15. Asserting BS16# (one wait state, non-pipelined address)**

generated for the two 16-bit bus cycles are closely related to each other. The addresses are the same except BE0# and BE1# are always negated for the second cycle. This is because data on D0–D15 was already transferred during the first 16-bit cycle.

Figures 5-14 and 5-15 show cases where assertion of BS16# requires a second 16-bit cycle for complete operand transfer. Figure 5-14 illustrates cycles without wait states. Figure 5-15 illustrates cycles with one wait state. In Figure 5-15 cycle 1, the bus cycle during which BS16# is asserted, note that NA# must be negated in the T2 state(s) prior to the last T2 state. This is to allow the recognition of BS16# asserted in the final T2 state. Also note that during this state BS16# must be stable (defined by t17 and t18, BS16# setup and hold timings), in order to prevent potential data corruption during split cycle reads. The logic state of BS16# during this time is not important. The relation of NA# and BS16# is given fully in **5.4.3.4 Pipelined Address**, but Figure 5-15 illustrates these precautions you need to know when using BS16# with non-pipelined address.

### 5.4.3.4 PIPELINED ADDRESS

Address pipelining is the option of requesting the address and the bus cycle definition of the next, internally pending bus cycle before the current bus cycle is acknowledged with READY# asserted. ADS# is asserted by the Intel386 DX when the next address is issued. The address pipelining option is controlled on a cycle-by-cycle basis with the NA# input signal.

Once a bus cycle is in progress and the current address has been valid for at least one entire bus state, the NA# input is sampled at the end of every phase one until the bus cycle is acknowledged. During non-pipelined bus cycles, therefore, NA# is sampled at the end of phase one in every T2. An example is Cycle 2 in Figure 5-16, during which NA# is sampled at the end of phase one of every T2 (it was asserted once during the first T2 and has no further effect during that bus cycle).

If NA# is sampled asserted, the Intel386 DX is free to drive the address and bus cycle definition of the next bus cycle, and assert ADS#, as soon as it has a bus request internally pending. It may drive the next address as early as the next bus state, whether the current bus cycle is acknowledged at that time or not.

Regarding the details of address pipelining, the Intel386 DX has the following characteristics:

1) For NA# to be sampled asserted, BS16# must be negated at that sampling window (see Figure 5-16 Cycles 2 through 4, and Figure 5-17 Cycles 1 through 4). If NA# and BS16# are both sampled asserted during the last T2 period of a bus cycle, BS16# asserted has priority. Therefore, if both are asserted, the current bus size is taken to be 16 bits and the next address is not pipelined.

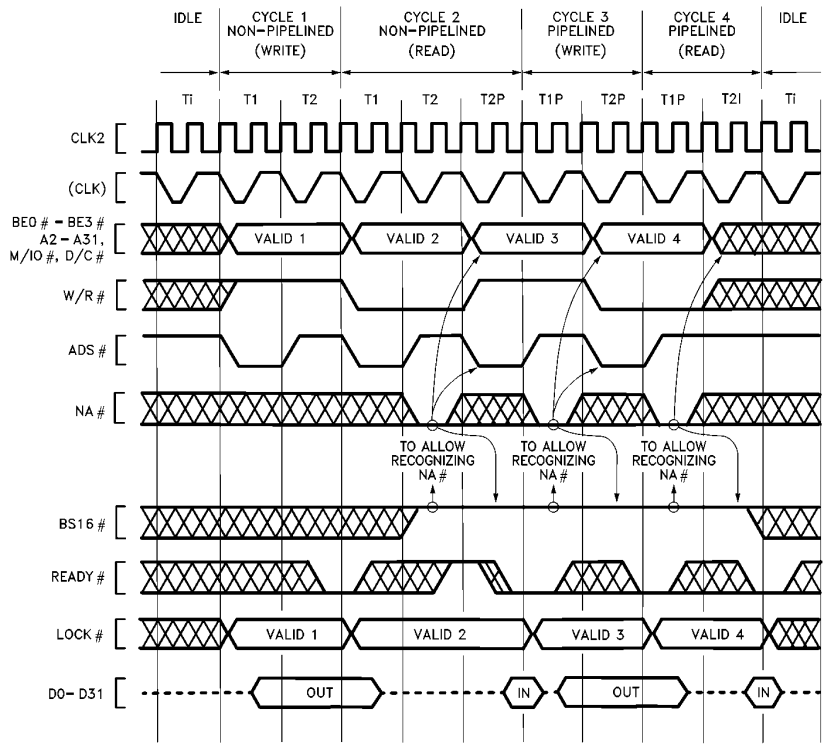


231630–20

Following any idle bus state (Ti), addresses are non-pipelined. Within non-pipelined bus cycles, NA# is only sampled during wait states. Therefore, to begin address pipelining during a group of non-pipelined bus cycles requires a non-pipelined cycle with at least one wait state (Cycle 2 above).

**Figure 5-16. Transitioning to Pipelined Address During Burst of Bus Cycles**

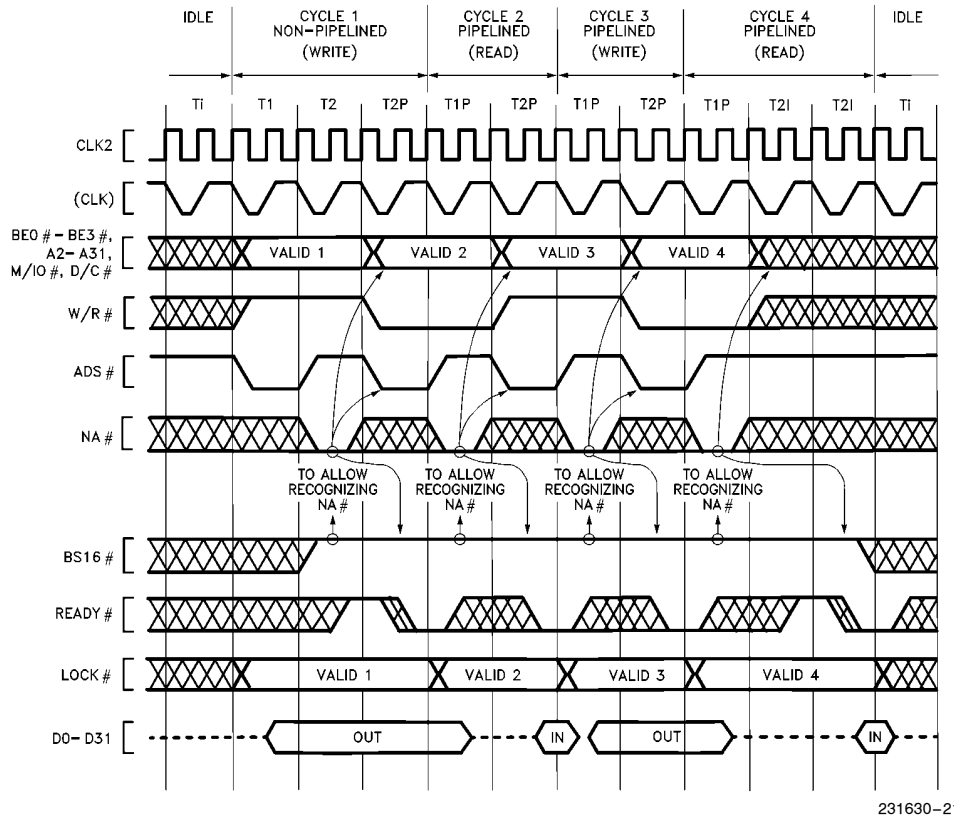


Following any idle bus state (Ti) the address is always non-pipelined and NA# is only sampled during wait states. To start address pipelining after an idle state requires a non-pipelined cycle with at least one wait state (cycle 1 above).
The pipelined cycles (2, 3, 4 above) are shown with various numbers of wait states.

**Figure 5-17. Fastest Transition to Pipelined Address Following Idle Bus State**

2) The next address may appear as early as the bus state after NA# was sampled asserted (see Figures 5-16 or 5-17). In that case, state T2P is entered immediately. However, when there is not an internal bus request already pending, the next address will not be available immediately after NA# is asserted and T2I is entered instead of T2P (see Figure 5-19 Cycle 3). Provided the current bus cycle isn't yet acknowledged by READY# asserted, T2P will be entered as soon as the Intel386 DX does drive the next address. External hardware should therefore observe the ADS# output as confirmation the next address is actually being driven on the bus.

3) Once NA# is sampled asserted, the Intel386 DX commits itself to the highest priority bus request that is pending internally. It can no longer perform another 16-bit transfer to the same address should BS16# be asserted externally, so thereafter must assume the current bus size is 32 bits. Therefore if NA# is sampled asserted within a bus cycle, BS16# must be negated thereafter in that bus cycle (see Figures 5-16, 5-17, 5-19). Consequently, do not assert NA# during bus cycles which must have BS16# driven asserted. See **5.4.3.6 Dynamic Bus Sizing with Pipelined Address.**

4) Any address which is validated by a pulse on the Intel386 DX ADS# output will remain stable on the address pins for at least two processor clock periods. The Intel386 DX cannot produce a new address more frequently than every two processor clock periods (see Figures 5-16, 5-17, 5-19).

5) Only the address and bus cycle definition of the very next bus cycle is available. The pipelining capability cannot look further than one bus cycle ahead (see Figure 5-19 Cycle 1).

The complete bus state transition diagram, including operation with pipelined address is given by 5-20. Note it is a superset of the diagram for non-pipelined address only, and the three additional bus states for pipelined address are drawn in bold.

The fastest bus cycle with pipelined address consists of just two bus states, T1P and T2P (recall for non-pipelined address it is T1 and T2). T1P is the first bus state of a pipelined cycle.

#### 5.4.3.5 INITIATING AND MAINTAINING PIPELINED ADDRESS

Using the state diagram Figure 5-20, observe the transitions from an idle state, Ti, to the beginning of a pipelined bus cycle, T1P. From an idle state Ti, the first bus cycle must begin with T1, and is therefore a non-pipelined bus cycle. The next bus cycle will be pipelined, however, provided NA# is asserted and the first bus cycle ends in a T2P state (the address for the next bus cycle is driven during T2P). The fastest path from an idle state to a bus cycle with pipelined address is shown in bold below:

| Ti, Ti, Ti | T1 - T2 - T2P, | T1P - T2P, |
|---|---|---|
| idle states | non-pipelined cycle | pipelined cycle |

T1-T2-T2P are the states of the bus cycle that establishes address pipelining for the next bus cycle, which begins with T1P. The same is true after a bus hold state, shown below:

| Th, Th, Th, | T1 - T2 - T2P, | T1P - T2P, |
|---|---|---|
| hold acknowledge states | non-pipelined cycle | pipelined cycle |

The transition to pipelined address is shown functionally by Figure 5-17 Cycle 1. Note that Cycle 1 is used to transition into pipelined address timing for the subsequent Cycles 2, 3 and 4, which are pipelined. The NA# input is asserted at the appropriate time to select address pipelining for Cycles 2, 3 and 4.

Once a bus cycle is in progress and the current address has become valid, the NA# input is sampled at the end of every phase one, beginning with the next bus state, until the bus cycle is acknowledged. During Figure 5-17 Cycle 1 therefore, sampling begins in T2. Once NA# is sampled asserted during the current cycle, the Intel386 DX is free to drive a new address and bus cycle definition on the bus as early as the next bus state. In Figure 5-16 Cycle 1 for example, the next address is driven during state T2P. Thus Cycle 1 makes the transition to pipelined address timing, since it begins with T1 but ends with T2P. Because the address for Cycle 2 is available before Cycle 2 begins, Cycle 2 is called a pipelined bus cycle, and it begins with T1P. Cycle 2 begins as soon as READY# asserted terminates Cycle 1.

Example transition bus cycles are Figure 5-17 Cycle 1 and Figure 5-16 Cycle 2. Figure 5-17 shows transition during the very first cycle after an idle bus state, which is the fastest possible transition into address pipelining. Figure 5-16 Cycle 2 shows a transition cycle occurring during a burst of bus cycles. In any case, a transition cycle is the same whenever it occurs: it consists at least of T1, T2 (you assert NA# at that time), and T2P (provided the Intel386 DX has an internal bus request already pending, which it almost always has). T2P states are repeated if wait states are added to the cycle.

Note three states (T1, T2 and T2P) are only required in a bus cycle performing a **transition** from non-pipelined address into pipelined address timing, for example Figure 5-17 Cycle 1. Figure 5-17 Cycles 2, 3 and 4 show that address pipelining can be maintained with two-state bus cycles consisting only of T1P and T2P.

Once a pipelined bus cycle is in progress, pipelined timing is maintained for the next cycle by asserting NA# and detecting that the Intel386 DX enters T2P during the current bus cycle. The current bus cycle must end in state T2P for pipelining to be maintained in the next cycle. T2P is identified by the assertion of ADS#. Figures 5-16 and 5-17 however, each show pipelining ending after Cycle 4 because Cycle 4 ends in T2I. This indicates the Intel386 DX didn't have an internal bus request prior to the acknowledgement of Cycle 4. If a cycle ends with a T2 or T2I, the next cycle will not be pipelined.

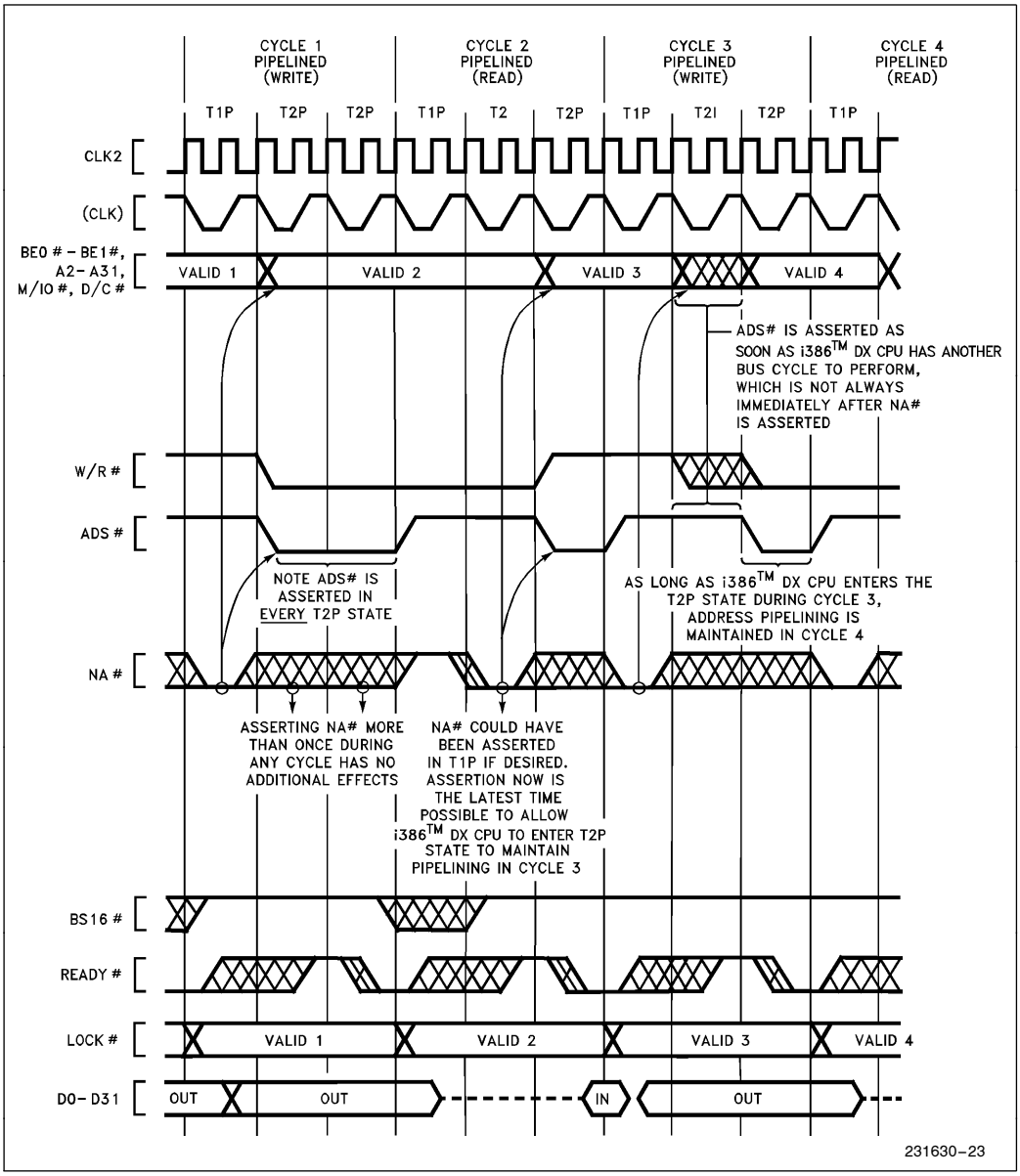


**Figure 5-19. Details of Address Pipelining During Cycles with Wait States**

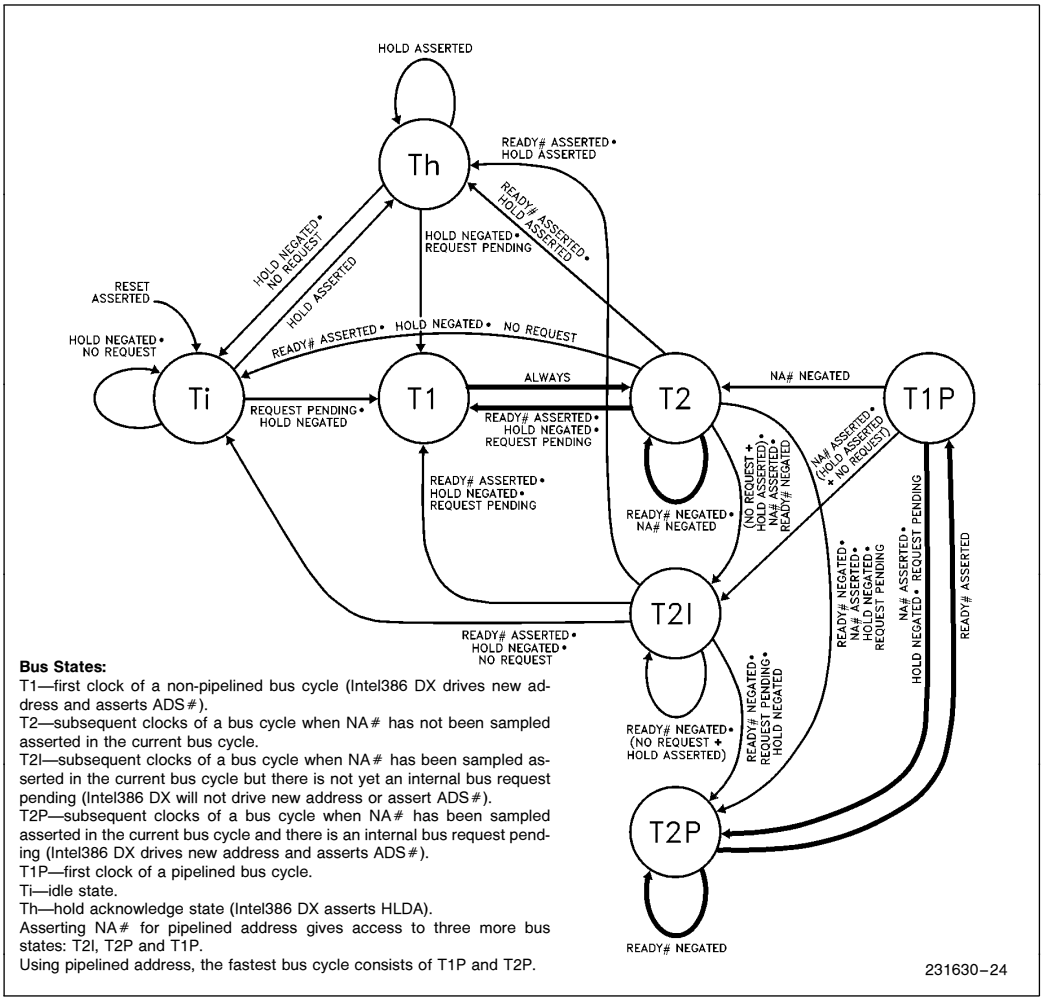


**Bus States:**
T1—first clock of a non-pipelined bus cycle (Intel386 DX drives new address and asserts ADS#).
T2—subsequent clocks of a bus cycle when NA# has not been sampled asserted in the current bus cycle.
T2I—subsequent clocks of a bus cycle when NA# has been sampled asserted in the current bus cycle but there is not yet an internal bus request pending (Intel386 DX will not drive new address or assert ADS#).
T2P—subsequent clocks of a bus cycle when NA# has been sampled asserted in the current bus cycle and there is an internal bus request pending (Intel386 DX drives new address and asserts ADS#).
T1P—first clock of a pipelined bus cycle.
Ti—idle state.
Th—hold acknowledge state (Intel386 DX asserts HLDA).
Asserting NA# for pipelined address gives access to three more bus states: T2I, T2P and T1P.
Using pipelined address, the fastest bus cycle consists of T1P and T2P.

**Figure 5-20. Intel386™ DX Complete Bus States (including pipelined address)**

Realistically, address pipelining is almost always maintained as long as NA# is sampled asserted. This is so because in the absence of any other request, a code prefetch request is always internally pending until the instruction decoder and code prefetch queue are completely full. Therefore address pipelining is maintained for long bursts of bus cycles, if the bus is available (i.e., HOLD negated) and NA# is sampled asserted in each of the bus cycles.

#### 5.4.3.6 PIPELINED ADDRESS WITH DYNAMIC DATA BUS SIZING

The BS16# feature allows easy interface to 16-bit data buses. When asserted, the Intel386 DX bus interface hardware performs appropriate action to make the transfer using a 16-bit data bus connected on D0–D15.

There is a degree of interaction, however, between the use of Address Pipelining and the use of Bus Size 16. The interaction results from the multiple bus cycles required when transferring 32-bit operands over a 16-bit bus. If the operand requires both 16-bit halves of the 32-bit bus, the appropriate Intel386 DX action is a second bus cycle to complete the operand's transfer. It is this necessity that conflicts with NA# usage.

When NA# is sampled asserted, the Intel386 DX commits itself to perform the next inter-

nally pending bus request, and is allowed to drive the next internally pending address onto the bus. Asserting NA# therefore makes it impossible for the next bus cycle to again access the current address on A2–A31, such as may be required when BS16# is asserted by the external hardware.

To avoid conflict, the Intel386 DX is designed with following two provisions:

1) To avoid conflict, BS16# must be negated in the current bus cycle if NA# has already been sampled asserted in the current cycle. If NA# is sampled asserted, the current data bus size is assumed to be 32 bits.
2) To also avoid conflict, if NA# and BS16# are both asserted during the same sampling window, BS16# asserted has priority and the Intel386 DX acts as if NA# was negated at that time. Internal Intel386 DX circuitry, shown conceptually in Figure 5-18, assures that BS16# is sampled asserted and NA# is sampled negated if both inputs are externally asserted at the same sampling window.

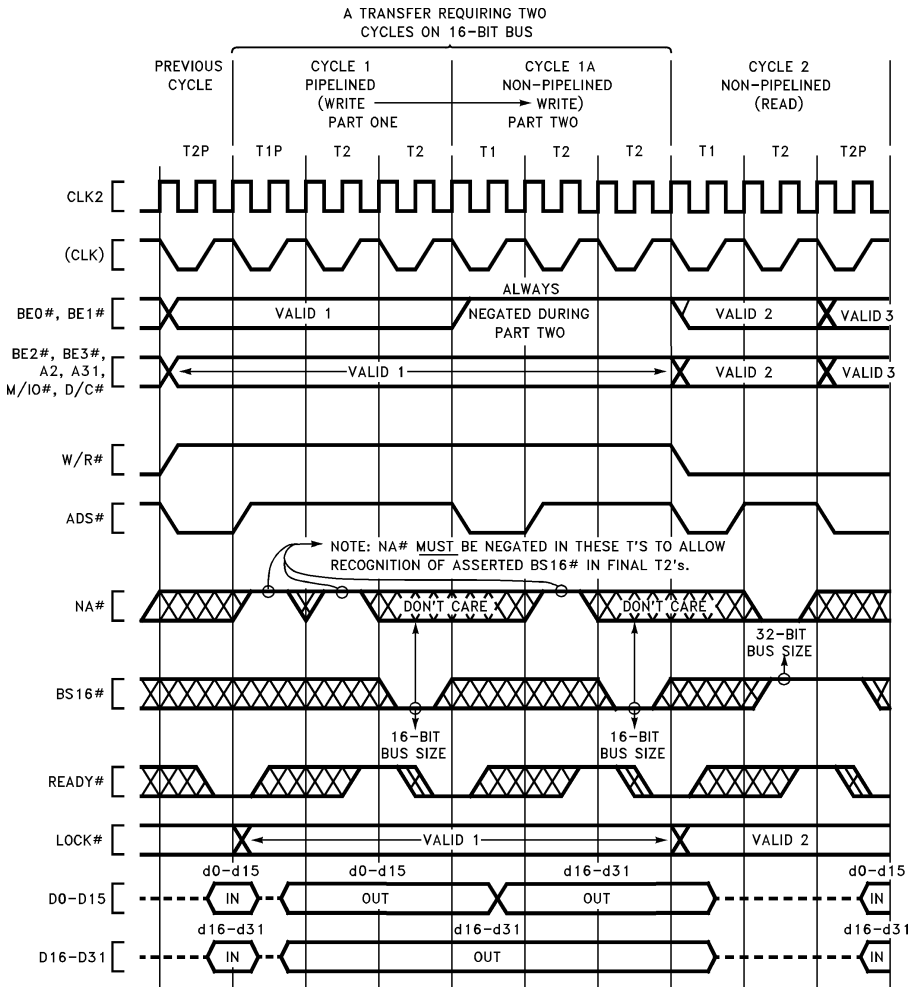


Key: Dn = physical data pin n
dn = logical data bit n

231630-25

Cycle 1 is pipelined. Cycle 1a cannot be pipelined, but its address can be inferred from that of Cycle 1, to externally simulate address pipelining during Cycle 1a.

**Figure 5-21. Using NA# and BS16#**

Certain types of 16-bit or 8-bit operands require no adjustment for correct transfer on a 16-bit bus. Those are read or write operands using only the lower half of the data bus, and write operands using only the upper half of the bus since the Intel386 DX simultaneously duplicates the write data on the lower half of the data bus. For these patterns of Byte Enables and the R/W# signals, BS16# need not be asserted at the Intel386 DX allowing NA# to be asserted during the bus cycle if desired.

### 5.4.4 Interrupt Acknowledge (INTA) Cycles

In response to an interrupt request on the INTR input when interrupts are enabled, the Intel386 DX performs two interrupt acknowledge cycles. These bus cycles are similar to read cycles in that bus definition signals define the type of bus activity taking place, and each cycle continues until acknowledged by READY# sampled asserted.

The state of A2 distinguishes the first and second interrupt acknowledge cycles. The byte address driven during the first interrupt acknowledge cycle is 4 (A31–A3 low, A2 high, BE3#–BE1# high, and BE0# low). The address driven during the second interrupt acknowledge cycle is 0 (A31–A2 low, BE3#–BE1# high, BE0# low).

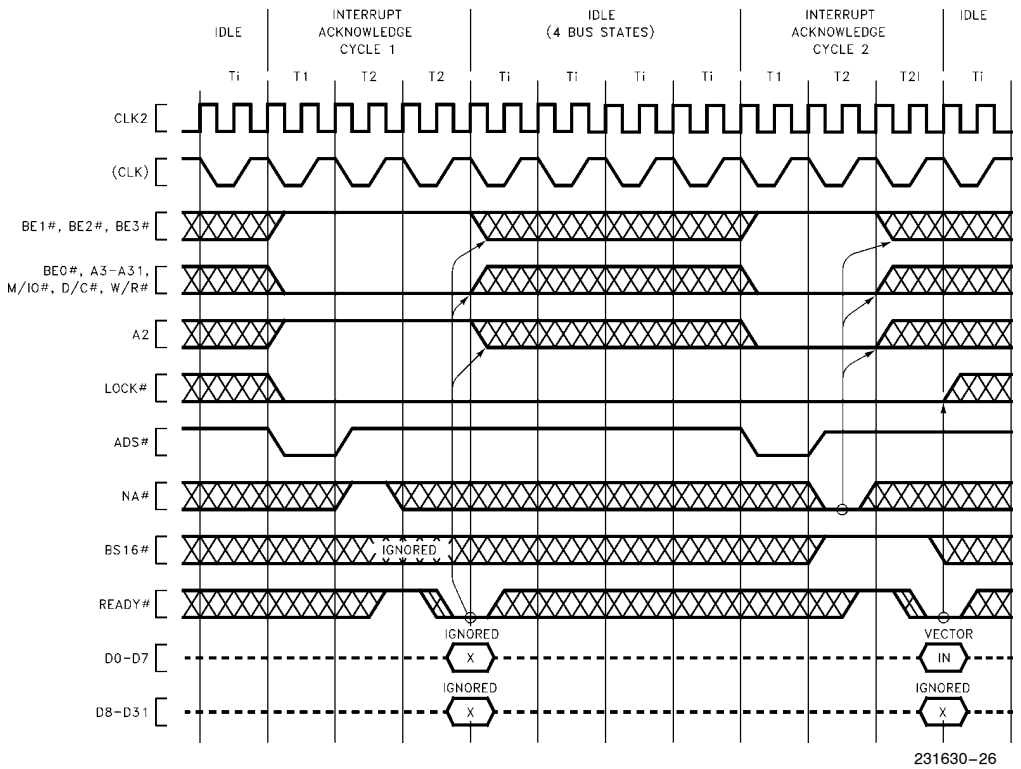


Interrupt Vector (0–255) is read on D0–D7 at end of second Interrupt Acknowledge bus cycle.
Because each Interrupt Acknowledge bus cycle is followed by idle bus states, asserting NA# has no practical effect. Choose the approach which is simplest for your system hardware design.

**Figure 5-22. Interrupt Acknowledge Cycles**

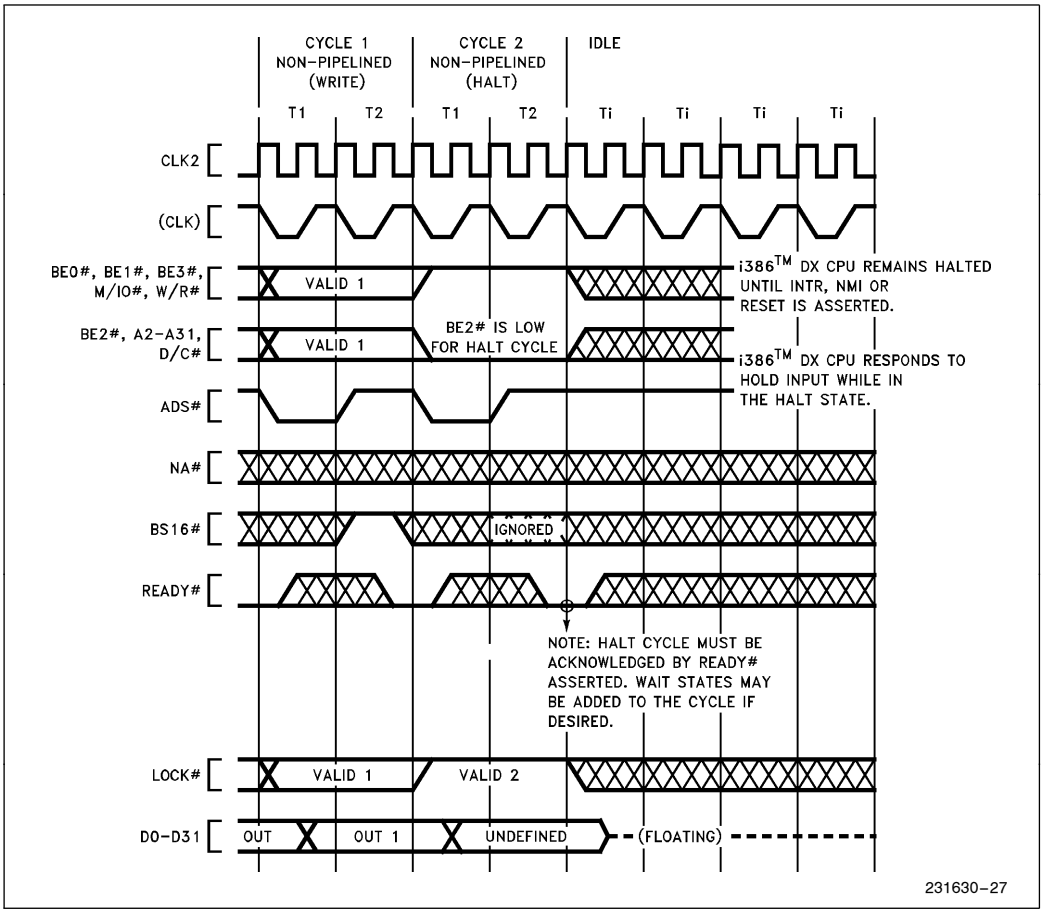


**Figure 5-23. Halt Indication Cycle**

The LOCK# output is asserted from the beginning of the first interrupt acknowledge cycle until the end of the second interrupt acknowledge cycle. Four idle bus states, Ti, are inserted by the Intel386 DX between the two interrupt acknowledge cycles, allowing for compatibility with spec TRHRL of the 8259A Interrupt Controller.

During both interrupt acknowledge cycles, D0–D31 float. No data is read at the end of the first interrupt acknowledge cycle. At the end of the second interrupt acknowledge cycle, the Intel386 DX will read an external interrupt vector from D0–D7 of the data bus. The vector indicates the specific interrupt number (from 0–255) requiring service.

## 5.4.5 Halt Indication Cycle

The Intel386 DX halts as a result of executing a HALT instruction. Signaling its entrance into the halt state, a halt indication cycle is performed. The halt indication cycle is identified by the state of the bus definition signals shown in **5.2.5 Bus Cycle Definition** and a byte address of 2. BE0# and BE2# are the only signals distinguishing halt indication from shutdown indication, which drives an address of 0. During the halt cycle undefined data is driven on D0–D31. The halt indication cycle must be acknowledged by READY# asserted.

A halted Intel386 DX resumes execution when INTR (if interrupts are enabled) or NMI or RESET is asserted.

### 5.4.6 Shutdown Indication Cycle

The Intel386 DX shuts down as a result of a protection fault while attempting to process a double fault. Signaling its entrance into the shutdown state, a shutdown indication cycle is performed. The shutdown indication cycle is identified by the state of the bus definition signals shown in **5.2.5 Bus Cycle Definition** and a byte address of 0. BE0# and BE2# are the only signals distinguishing shutdown indication from halt indication, which drives an address of 2. During the shutdown cycle undefined data is driven on D0–D31. The shutdown indication cycle must be acknowledged by READY# asserted.

A shutdown Intel386 DX resumes execution when NMI or RESET is asserted.

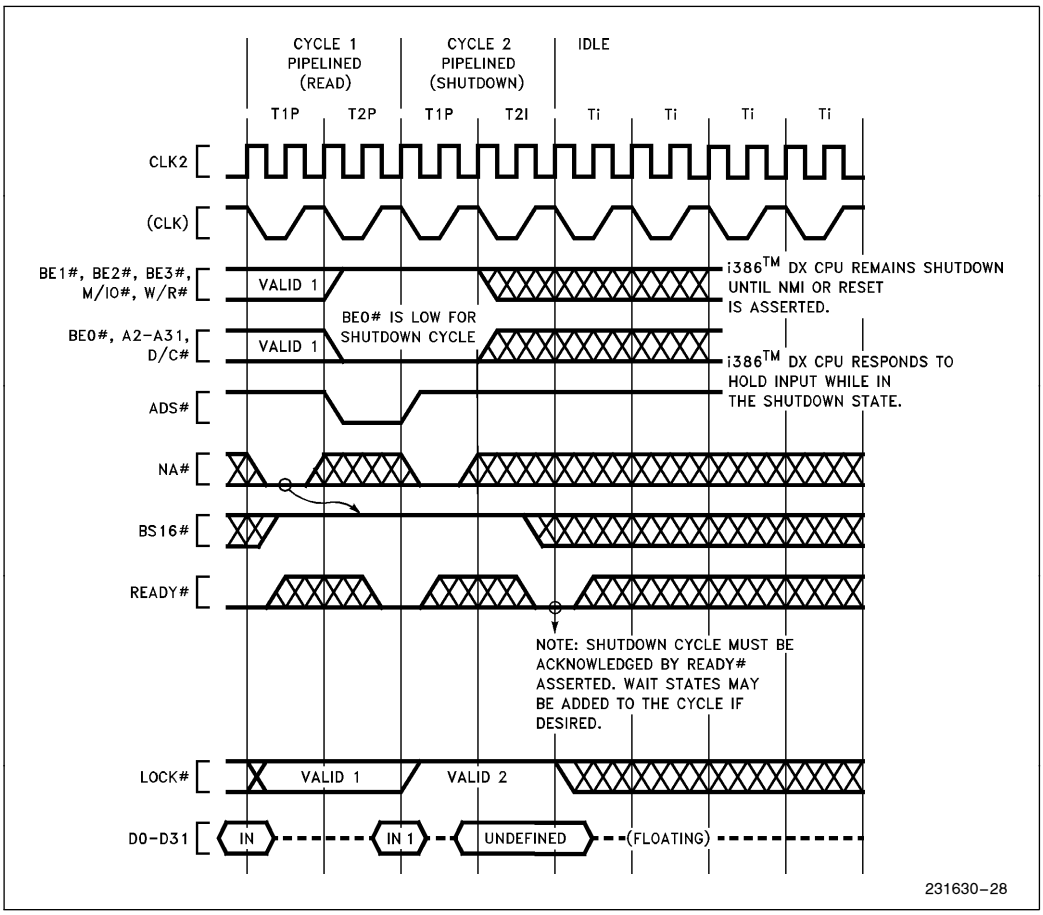


**Figure 5-24. Shutdown Indication Cycle**

## 5.5 OTHER FUNCTIONAL DESCRIPTIONS

### 5.5.1 Entering and Exiting Hold Acknowledge

The bus hold acknowledge state, Th, is entered in response to the HOLD input being asserted. In the bus hold acknowledge state, the Intel386 DX floats all output or bidirectional signals, except for HLDA. HLDA is asserted as long as the Intel386 DX remains in the bus hold acknowledge state. In the bus hold acknowledge state, all inputs except HOLD, RESET, BUSY#, ERROR#, and PEREQ are ignored (also up to one rising edge on NMI is remembered for processing when HOLD is no longer asserted).

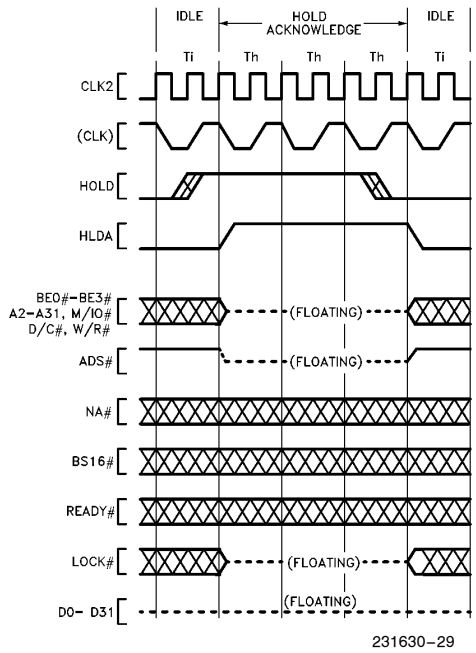


**NOTE:**
For maximum design flexibility the Intel386 DX has no internal pullup resistors on its outputs. Your design may require an external pullup on ADS# and other Intel386 DX outputs to keep them negated during float periods.

**Figure 5-25. Requesting Hold from Idle Bus**

Th may be entered from a bus idle state as in Figure 5-25 or after the acknowledgement of the current physical bus cycle if the LOCK# signal is not asserted, as in Figures 5-26 and 5-27. If HOLD is asserted during a locked bus cycle, the Intel386 DX may execute one unlocked bus cycle before acknowledging HOLD. If asserting BS16# requires a second 16-bit bus cycle to complete a physical operand transfer, it is performed before HOLD is acknowledged, although the bus state diagrams in Figures 5-13 and 5-20 do not indicate that detail.

Th is exited in response to the HOLD input being negated. The following state will be Ti as in Figure 5-25 if no bus request is pending. The following bus state will be T1 if a bus request is internally pending, as in Figures 5-26 and 5-27.

Th is also exited in response to RESET being asserted.

If a rising edge occurs on the edge-triggered NMI input while in Th, the event is remembered as a nonmaskable interrupt 2 and is serviced when Th is exited, unless of course, the Intel386 DX is reset before Th is exited.

### 5.5.2 Reset During Hold Acknowledge

RESET being asserted takes priority over HOLD being asserted. Therefore, Th is exited in reponse to the RESET input being asserted. If RESET is asserted while HOLD remains asserted, the Intel386 DX drives its pins to defined states during reset, as in **Table 5-3 Pin State During Reset**, and performs internal reset activity as usual.

If HOLD remains asserted when RESET is negated, the Intel386 DX enters the hold acknowledge state before performing its first bus cycle, provided HOLD is still asserted when the Intel386 DX would otherwise perform its first bus cycle. If HOLD remains asserted when RESET is negated, the BUSY# input is still sampled as usual to determine whether a self test is being requested, and ERROR# is still sampled as usual to determine whether a Intel387 DX coprocessor vs. an 80287 (or none) is present.

### 5.5.3 Bus Activity During and Following Reset

RESET is the highest priority input signal, capable of interrupting any processor activity when it is asserted. A bus cycle in progress can be aborted at any stage, or idle states or bus hold acknowledge states discontinued so that the reset state is established.

RESET should remain asserted for at least 15 CLK2 periods to ensure it is recognized throughout the Intel386 DX, and at least 80 CLK2 periods if Intel386 DX self-test is going to be requested at the falling edge. RESET asserted pulses less than 15 CLK2 periods may not be recognized. RESET pulses less than 80 CLK2 periods followed by a self-test may

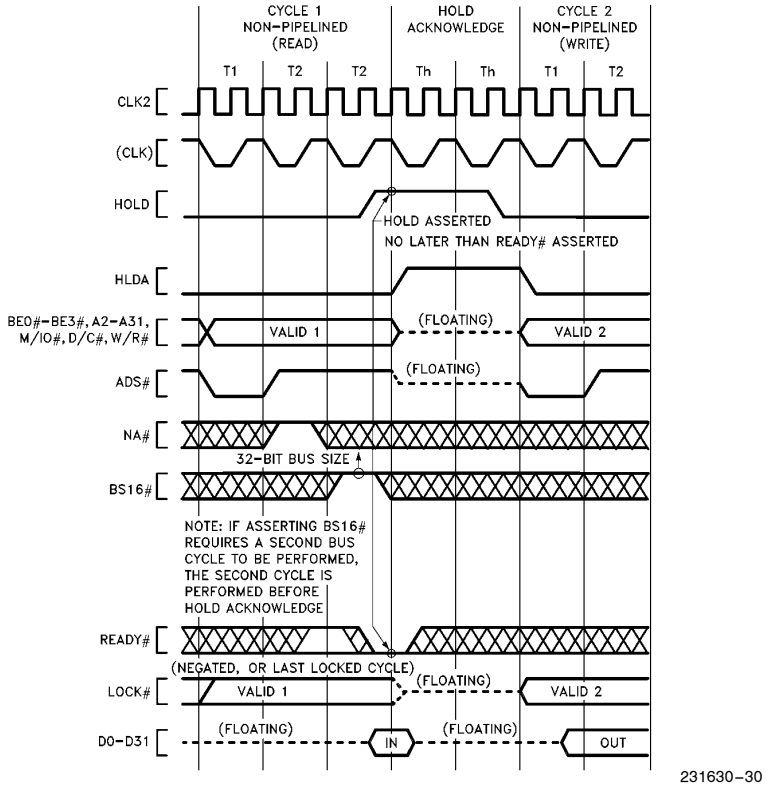


**NOTE:**
HOLD is a synchronous input and can be asserted at any CLK2 edge, provided setup and hold ($t_{23}$ and $t_{24}$) requirements are met. This waveform is useful for determining Hold Acknowledge latency.

**Figure 5-26. Requesting Hold from Active Bus (NA# negated)**

cause the self-test to report a failure when no true failure exists. The additional RESET pulse width is required to clear additional state prior to a valid self-test.

Provided the RESET falling edge meets setup and hold times $t_{25}$ and $t_{26}$, the internal processor clock phase is defined at that time, as illustrated by Figure 5-28 and Figure 7-7.

A Intel386 DX self-test may be requested at the time RESET is negated by having the BUSY# input at a LOW level, as shown in Figure 5-28. The self-test requires ($2^{20}$) + approximately 60 CLK2 periods to complete. The self-test duration is not affected by the test results. Even if the self-test indicates a problem, the Intel386 DX attempts to proceed with the reset sequence afterwards.

After the RESET falling edge (and after the self-test if it was requested) the Intel386 DX performs an internal initialization sequence for approximately 350 to 450 CLK2 periods.

The Intel386 DX samples its ERROR# input some time after the falling edge of RESET and before executing the first ESC instruction. During this sampling period BUSY# must be HIGH. If ERROR# was sampled active, the Intel386 DX employs the 32-bit protocol of the Intel387 DX. Even though this protocol was selected, it is still necessary to use a software recognition test to determine the presence or identity of the coprocessor and to assure compatibility with future processors. (See Chapter 11 of the Intel386 DX Programmer's Reference Manual, Order #230985-002).

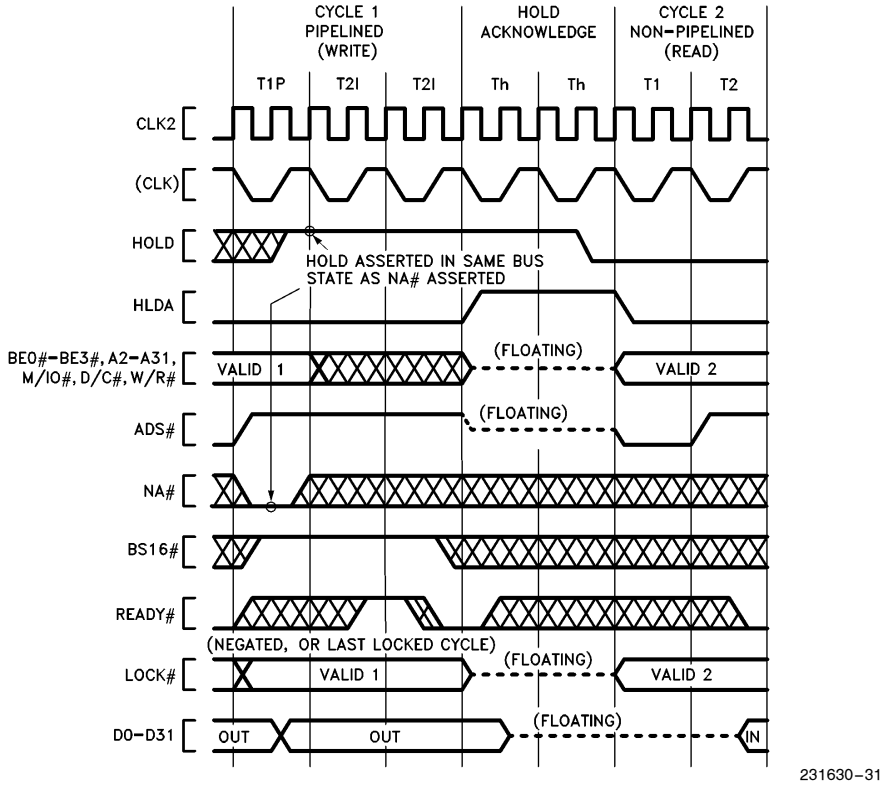


**NOTE:**
HOLD is a synchronous input and can be asserted at any CLK2 edge, provided setup and hold ($t_{23}$ and $t_{24}$) requirements are met. This waveform is useful for determining Hold Acknowledge latency.

**Figure 5-27. Requesting Hold from Active Bus (NA# asserted)**

## 5.6 SELF-TEST SIGNATURE

Upon completion of self-test, (if self-test was requested by holding BUSY# LOW at least eight CLK2 periods before and after the falling edge of RESET), the EAX register will contain a signature of 00000000h indicating the Intel386 DX passed its self-test of microcode and major PLA contents with no problems detected. The passing signature in EAX, 00000000h, applies to all Intel386 DX revision levels. Any non-zero signature indicates the Intel386 DX unit is faulty.

## 5.7 COMPONENT AND REVISION IDENTIFIERS

To assist Intel386 DX users, the Intel386 DX after reset holds a component identifier and a revision identifier in its DX register. The upper 8 bits of DX hold 03h as identification of the Intel386 DX component. The lower 8 bits of DX hold an 8-bit unsigned binary number related to the component revision level. The revision identifier begins chronologically with a value zero and is subject to change (typically it will be incremented) with component steppings intended to have certain improvements or distinctions from previous steppings.

These features are intended to assist Intel386 DX users to a practical extent. However, the revision identifier value is not guaranteed to change with every stepping revision, or to follow a completely uniform numerical sequence, depending on the type or intention of revision, or manufacturing materials required to be changed. Intel has sole discretion over these characteristics of the component.

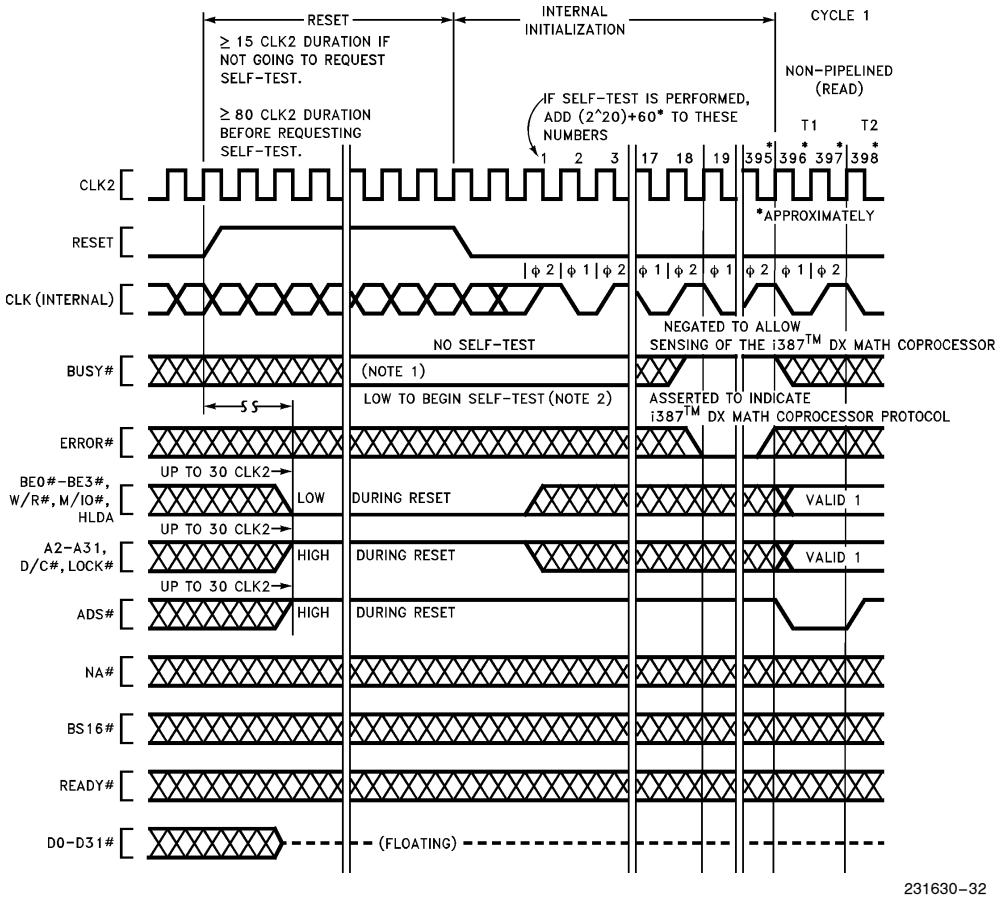


**NOTES:**
1. BUSY# should be held stable for 8 CLK2 periods before and after the CLK2 period in which RESET falling edge occurs.
2. If self-test is requested, the Intel386 DX outputs remain in their reset state as shown here and in Table 5-3.

**Figure 5-28. Bus Activity from Reset Until First Code Fetch**

**Table 5-10. Component and Revision Identifier History**

| Intel386™ DX Stepping Name | Component Identifier | Revision Identifier | Intel386 DX Stepping Name | Component Identifier | Revision Identifier |
|---|---|---|---|---|---|
| B0 | 03 | 03 | D0 | 03 | 05 |
| B1 | 03 | 03 | D1 | 03 | 08 |

## 5.8 COPROCESSOR INTERFACING

The Intel386 DX provides an automatic interface for the Intel Intel387 DX numeric floating-point coprocessor. The Intel387 DX coprocessor uses an I/O-mapped interface driven automatically by the Intel386 DX and assisted by three dedicated signals: BUSY#, ERROR#, and PEREQ.

As the Intel386 DX begins supporting a coprocessor instruction, it tests the BUSY# and ERROR# signals to determine if the coprocessor can accept its next instruction. Thus, the BUSY# and ERROR# inputs eliminate the need for any ''preamble'' bus cycles for communication between processor and coprocessor. The Intel387 DX can be given its command opcode immediately. The dedicated signals provide instruction synchronization, and eliminate the need of using the Intel386 DX WAIT opcode (9Bh) for Intel387 DX coprocessor instruction synchronization (the WAIT opcode was required when 8086 or 8088 was used with the 8087 coprocessor).

Custom coprocessors can be included in Intel386 DX-based systems, via memory-mapped or I/O-mapped interfaces. Such coprocessor interfaces allow a completely custom protocol, and are not limited to a set of coprocessor protocol ''primitives''. Instead, memory-mapped or I/O-mapped interfaces may use all applicable Intel386 DX instructions for high-speed coprocessor communication. The BUSY# and ERROR# inputs of the Intel386 DX may also be used for the custom coprocessor interface, if such hardware assist is desired. These signals can be tested by the Intel386 DX WAIT opcode (9Bh). The WAIT instruction will wait until the BUSY# input is negated (interruptable by an NMI or enabled INTR input), but generates an exception 16 fault if the ERROR# pin is in the asserted state when the BUSY# goes (or is) negated. If the custom coprocessor interface is memory-mapped, protection of the addresses used for the interface can be provided with the Intel386 DX on-chip paging or segmentation mechanisms. If the custom interface is I/O-mapped, protection of the interface can be provided with the Intel386 DX IOPL (I/O Privilege Level) mechanism.

The Intel387 DX numeric coprocessor interface is I/O mapped as shown in Table 5-11. Note that the Intel387 DX coprocessor interface addresses are beyond the 0h-FFFFh range for programmed I/O. When the Intel386 DX supports the Intel387 DX coprocessor, the Intel386 DX automatically generates bus cycles to the coprocessor interface addresses.

**Table 5-11. Numeric Coprocessor Port Addresses**

| Address in Intel386™ DX I/O Space | Intel387™ DX Coprocessor Register |
|---|---|
| 800000F8h | Opcode Register (32-bit port) |
| 800000FCh | Operand Register (32-bit port) |

To correctly map the Intel387 DX coprocessor registers to the appropriate I/O addresses, connect the Intel387 DX coprocessor CMD0# pin directly to the A2 output of the Intel386 DX.

### 5.8.1 Software Testing for Coprocessor Presence

When software is used to test for coprocessor (Intel387 DX) presence, it should use only the following coprocessor opcodes: FINIT, FNINIT, FSTCW mem, FSTSW mem, FSTSW AX. To use other coprocessor opcodes when a coprocessor is known to be not present, first set EM = 1 in Intel386 DX CR0.

# 6. INSTRUCTION SET

This section describes the Intel386 DX instruction set. A table lists all instructions along with instruction encoding diagrams and clock counts. Further details of the instruction encoding are then provided in the following sections, which completely describe the encoding structure and the definition of all fields occurring within Intel386 DX instructions.

## 6.1 Intel386™ DX INSTRUCTION ENCODING AND CLOCK COUNT SUMMARY

To calculate elapsed time for an instruction, multiply the instruction clock count, as listed in Table 6-1 below, by the processor clock period (e.g. 50 ns for a 20 MHz Intel386 DX, 40 ns for a 25 MHz Intel386 DX, and 30 ns for a 33 MHz Intel386 DX).

For more detailed information on the encodings of instructions refer to section 6.2 Instruction Encodings. Section 6.2 explains the general structure of instruction encodings, and defines exactly the encodings of all fields contained within the instruction.

Instruction Clock Count Assumptions

1. The instruction has been prefetched, decoded, and is ready for execution.
2. Bus cycles do not require wait states.
3. There are no local bus HOLD requests delaying processor access to the bus.
4. No exceptions are detected during instruction execution.
5. If an effective address is calculated, it does not use two general register components. One register, scaling and displacement can be used within the clock counts shown. However, if the effective address calculation uses two general register components, add 1 clock to the clock count shown.

Instruction Clock Count Notation

1. If two clock counts are given, the smaller refers to a register operand and the larger refers to a memory operand.
2. n = number of times repeated.
3. m = number of components in the next instruction executed, where the entire displacement (if any) counts as one component, the entire immediate data (if any) counts as one component, and each of the **other** bytes of the instruction and prefix(es) each count as one component.

Wait States

Add 1 clock per wait state to instruction execution for each data access.

## Table 6-1. Intel386™ DX Instruction Set Clock Count Summary

| INSTRUCTION | FORMAT | | | | CLOCK COUNT | | NOTES | |
|---|---|---|---|---|---|---|---|---|
| | | | | | Real Address Mode or Virtual 8086 Mode | Protected Virtual Address Mode | Real Address Mode or Virtual 8086 Mode | Protected Virtual Address Mode |
| **GENERAL DATA TRANSFER** | | | | | | | | |
| **MOV = Move:** | | | | | | | | |
| Register to Register/Memory | 1 0 0 0 1 0 0 w | mod reg r/m | | | 2/2 | 2/2 | b | h |
| Register/Memory to Register | 1 0 0 0 1 0 1 w | mod reg r/m | | | 2/4 | 2/4 | b | h |
| Immediate to Register/Memory | 1 1 0 0 0 1 1 w | mod 0 0 0 r/m | immediate data | | 2/2 | 2/2 | b | h |
| Immediate to Register (short form) | 1 0 1 1 w reg | immediate data | | | 2 | 2 | | |
| Memory to Accumulator (short form) | 1 0 1 0 0 0 0 w | full displacement | | | 4 | 4 | b | h |
| Accumulator to Memory (short form) | 1 0 1 0 0 0 1 w | full displacement | | | 2 | 2 | b | h |
| Register Memory to Segment Register | 1 0 0 0 1 1 1 0 | mod sreg3 r/m | | | 2/5 | 18/19 | b | h, i, j |
| Segment Register to Register/Memory | 1 0 0 0 1 1 0 0 | mod sreg3 r/m | | | 2/2 | 2/2 | b | h |
| **MOVSX = Move With Sign Extension** | | | | | | | | |
| Register From Register/Memory | 0 0 0 0 1 1 1 1 | 1 0 1 1 1 1 1 w | mod reg r/m | | 3/6 | 3/6 | b | h |
| **MOVZX = Move With Zero Extension** | | | | | | | | |
| Register From Register/Memory | 0 0 0 0 1 1 1 1 | 1 0 1 1 0 1 1 w | mod reg r/m | | 3/6 | 3/6 | b | h |
| **PUSH = Push:** | | | | | | | | |
| Register/Memory | 1 1 1 1 1 1 1 1 | mod 1 1 0 r/m | | | 5 | 5 | b | h |
| Register (short form) | 0 1 0 1 0 reg | | | | 2 | 2 | b | h |
| Segment Register (ES, CS, SS or DS) | 0 0 0 sreg2 1 1 0 | | | | 2 | 2 | b | h |
| Segment Register (FS or GS) | 0 0 0 0 1 1 1 1 | 1 0 sreg3 0 0 0 | | | 2 | 2 | b | h |
| Immediate | 0 1 1 0 1 0 s 0 | immediate data | | | 2 | 2 | b | h |
| **PUSHA = Push All** | 0 1 1 0 0 0 0 0 | | | | 18 | 18 | b | h |
| **POP = Pop** | | | | | | | | |
| Register/Memory | 1 0 0 0 1 1 1 1 | mod 0 0 0 r/m | | | 5 | 5 | b | h |
| Register (short form) | 0 1 0 1 1 reg | | | | 4 | 4 | b | h |
| Segment Register (ES, SS or DS) | 0 0 0 sreg 2 1 1 1 | | | | 7 | 21 | b | h, i, j |
| Segment Register (FS or GS) | 0 0 0 0 1 1 1 1 | 1 0 sreg 3 0 0 1 | | | 7 | 21 | b | h, i, j |
| **POPA = Pop All** | 0 1 1 0 0 0 0 1 | | | | 24 | 24 | b | h |
| **XCHG = Exchange** | | | | | | | | |
| Register/Memory With Register | 1 0 0 0 0 1 1 w | mod reg r/m | | | 3/5 | 3/5 | b, f | f, h |
| Register With Accumulator (short form) | 1 0 0 1 0 reg | | | | 3 | 3 | | |
| **IN = Input from:** | | | | **Clk Count Virtual 8086 Mode** | | | | |
| Fixed Port | 1 1 1 0 0 1 0 w | port number | | †26 | 12 | 6*/26** | | m |
| Variable Port | 1 1 1 0 1 1 0 w | | | †27 | 13 | 7*/27** | | m |
| **OUT = Output to:** | | | | | | | | |
| Fixed Port | 1 1 1 0 0 1 1 w | port number | | †24 | 10 | 4*/24** | | m |
| Variable Port | 1 1 1 0 1 1 1 w | | | †25 | 11 | 5*/25** | | m |
| **LEA = Load EA to Register** | 1 0 0 0 1 1 0 1 | mod reg r/m | | | 2 | 2 | | |

* If CPL ≤ IOPL ** If CPL > IOPL

**Table 6-1. Intel386™ DX Instruction Set Clock Count Summary** (Continued)

| INSTRUCTION | FORMAT | CLOCK COUNT | | NOTES | |
|---|---|---|---|---|---|
| | | Real Address Mode or Virtual 8086 Mode | Protected Virtual Address Mode | Real Address Mode or Virtual 8086 Mode | Protected Virtual Address Mode |
| **SEGMENT CONTROL** | | | | | |
| **LDS = Load Pointer to DS** | 11000101 mod reg r/m | 7 | 22 | b | h, i, j |
| **LES = Load Pointer to ES** | 11000100 mod reg r/m | 7 | 22 | b | h, i, j |
| **LFS = Load Pointer to FS** | 00001111 10110100 mod reg r/m | 7 | 25 | b | h, i, j |
| **LGS = Load Pointer to GS** | 00001111 10110101 mod reg r/m | 7 | 25 | b | h, i, j |
| **LSS = Load Pointer to SS** | 00001111 10110010 mod reg r/m | 7 | 22 | b | h, i, j |
| **FLAG CONTROL** | | | | | |
| **CLC = Clear Carry Flag** | 11111000 | 2 | 2 | | |
| **CLD = Clear Direction Flag** | 11111100 | 2 | 2 | | |
| **CLI = Clear Interrupt Enable Flag** | 11111010 | 8 | 8 | | m |
| **CLTS = Clear Task Switched Flag** | 00001111 00000110 | 6 | 6 | c | l |
| **CMC = Complement Carry Flag** | 11110101 | 2 | 2 | | |
| **LAHF = Load AH into Flag** | 10011111 | 2 | 2 | | |
| **POPF = Pop Flags** | 10011101 | 5 | 5 | b | h, n |
| **PUSHF = Push Flags** | 10011100 | 4 | 4 | b | h |
| **SAHF = Store AH into Flags** | 10011110 | 3 | 3 | | |
| **STC = Set Carry Flag** | 11111001 | 2 | 2 | | |
| **STD = Set Direction Flag** | 11111101 | 2 | 2 | | |
| **STI = Set Interrupt Enable Flag** | 11111011 | 8 | 8 | | m |
| **ARITHMETIC** | | | | | |
| **ADD = Add** | | | | | |
| Register to Register | 000000dw mod reg r/m | 2 | 2 | | |
| Register to Memory | 0000000w mod reg r/m | 7 | 7 | b | h |
| Memory to Register | 0000001w mod reg r/m | 6 | 6 | b | h |
| Immediate to Register/Memory | 100000sw mod 000 r/m immediate data | 2/7 | 2/7 | b | h |
| Immediate to Accumulator (short form) | 0000010w immediate data | 2 | 2 | | |
| **ADC = Add With Carry** | | | | | |
| Register to Register | 000100dw mod reg r/m | 2 | 2 | | |
| Register to Memory | 0001000w mod reg r/m | 7 | 7 | b | h |
| Memory to Register | 0001001w mod reg r/m | 6 | 6 | b | h |
| Immediate to Register/Memory | 100000sw mod 010 r/m immediate data | 2/7 | 2/7 | b | h |
| Immediate to Accumulator (short form) | 0001010w immediate data | 2 | 2 | | |
| **INC = Increment** | | | | | |
| Register/Memory | 1111111w mod 000 r/m | 2/6 | 2/6 | b | h |
| Register (short form) | 01000 reg | 2 | 2 | | |
| **SUB = Subtract** | | | | | |
| Register from Register | 001010dw mod reg r/m | 2 | 2 | | |

**Table 6-1. Intel386™ DX Instruction Set Clock Count Summary** (Continued)

| INSTRUCTION | FORMAT | CLOCK COUNT | | NOTES | |
|---|---|---|---|---|---|
| | | Real Address Mode or Virtual 8086 Mode | Protected Virtual Address Mode | Real Address Mode or Virtual 8086 Mode | Protected Virtual Address Mode |
| **ARITHMETIC** (Continued) | | | | | |
| Register from Memory | 0 0 1 0 1 0 0 w \| mod reg r/m | 7 | 7 | b | h |
| Memory from Register | 0 0 1 0 1 0 1 w \| mod reg r/m | 6 | 6 | b | h |
| Immediate from Register/Memory | 1 0 0 0 0 0 s w \| mod 1 0 1 r/m \| immediate data | 2/7 | 2/7 | b | h |
| Immediate from Accumulator (short form) | 0 0 1 0 1 1 0 w \| immediate data | 2 | 2 | | |
| **SBB = Subtract with Borrow** | | | | | |
| Register from Register | 0 0 0 1 1 0 d w \| mod reg r/m | 2 | 2 | | |
| Register from Memory | 0 0 0 1 1 0 0 w \| mod reg r/m | 7 | 7 | b | h |
| Memory from Register | 0 0 0 1 1 0 1 w \| mod reg r/m | 6 | 6 | b | h |
| Immediate from Register/Memory | 1 0 0 0 0 0 s w \| mod 0 1 1 r/m \| immediate data | 2/7 | 2/7 | b | h |
| Immediate from Accumulator (short form) | 0 0 0 1 1 1 0 w \| immediate data | 2 | 2 | | |
| **DEC = Decrement** | | | | | |
| Register/Memory | 1 1 1 1 1 1 1 w \| reg 0 0 1 r/m | 2/6 | 2/6 | b | h |
| Register (short form) | 0 1 0 0 1 reg | 2 | 2 | | |
| **CMP = Compare** | | | | | |
| Register with Register | 0 0 1 1 1 0 d w \| mod reg r/m | 2 | 2 | | |
| Memory with Register | 0 0 1 1 1 0 0 w \| mod reg r/m | 5 | 5 | b | h |
| Register with Memory | 0 0 1 1 1 0 1 w \| mod reg r/m | 6 | 6 | b | h |
| Immediate with Register/Memory | 1 0 0 0 0 0 s w \| mod 1 1 1 r/m \| immediate data | 2/5 | 2/5 | b | h |
| Immediate with Accumulator (short form) | 0 0 1 1 1 1 0 w \| immediate data | 2 | 2 | | |
| **NEG = Change Sign** | 1 1 1 1 0 1 1 w \| mod 0 1 1 r/m | 2/6 | 2/6 | b | h |
| **AAA = ASCII Adjust for Add** | 0 0 1 1 0 1 1 1 | 4 | 4 | | |
| **AAS = ASCII Adjust for Subtract** | 0 0 1 1 1 1 1 1 | 4 | 4 | | |
| **DAA = Decimal Adjust for Add** | 0 0 1 0 0 1 1 1 | 4 | 4 | | |
| **DAS = Decimal Adjust for Subtract** | 0 0 1 0 1 1 1 1 | 4 | 4 | | |
| **MUL = Multiply (unsigned)** | | | | | |
| Accumulator with Register/Memory | 1 1 1 1 0 1 1 w \| mod 1 0 0 r/m | | | | |
| Multiplier-Byte | | 12–17/15-20 | 12–17/15–20 | b, d | d, h |
| -Word | | 12–25/15-28 | 12–25/15–28 | b, d | d, h |
| -Doubleword | | 12–41/15-44 | 12–41/15–44 | b, d | d, h |
| **IMUL = Integer Multiply (signed)** | | | | | |
| Accumulator with Register/Memory | 1 1 1 1 0 1 1 w \| mod 1 0 1 r/m | | | | |
| Multiplier-Byte | | 12–17/15-20 | 12–17/15–20 | b, d | d, h |
| -Word | | 12–25/15-28 | 12–25/15–28 | b, d | d, h |
| -Doubleword | | 12–41/15-44 | 12–41/15–44 | b, d | d, h |
| Register with Register/Memory | 0 0 0 0 1 1 1 1 \| 1 0 1 0 1 1 1 1 \| mod reg r/m | | | | |
| Multiplier-Byte | | 12–17/15-20 | 12–17/15–20 | b, d | d, h |
| -Word | | 12–25/15-28 | 12–25/15–28 | b, d | d, h |
| -Doubleword | | 12–41/15-44 | 12–41/15–44 | b, d | d, h |
| Register/Memory with Immediate to Register | 0 1 1 0 1 0 s 1 \| mod reg r/m \| immediate data | | | | |
| -Word | | 13–26/14-27 | 13–26/14–27 | b, d | d, h |
| -Doubleword | | 13–42/14-43 | 13–42/14–43 | b, d | d, h |

**Table 6-1. Intel386™ DX Instruction Set Clock Count Summary** (Continued)

| INSTRUCTION | FORMAT | CLOCK COUNT: Real Address Mode or Virtual 8086 Mode | CLOCK COUNT: Protected Virtual Address Mode | NOTES: Real Address Mode or Virtual 8086 Mode | NOTES: Protected Virtual Address Mode |
|---|---|---|---|---|---|
| **ARITHMETIC** (Continued) | | | | | |
| **DIV = Divide (Unsigned)** | | | | | |
| Accumulator by Register/Memory | 1 1 1 1 0 1 1 w \| mod 1 1 0 r/m | | | | |
| Divisor—Byte | | 14/17 | 14/17 | b,e | e,h |
| —Word | | 22/25 | 22/25 | b,e | e,h |
| —Doubleword | | 38/41 | 38/41 | b,e | e,h |
| **IDIV = Integer Divide (Signed)** | | | | | |
| Accumulator By Register/Memory | 1 1 1 1 0 1 1 w \| mod 1 1 1 r/m | | | | |
| Divisor—Byte | | 19/22 | 19/22 | b,e | e,h |
| —Word | | 27/30 | 27/30 | b,e | e,h |
| —Doubleword | | 43/46 | 43/46 | b,e | e,h |
| **AAD = ASCII Adjust for Divide** | 1 1 0 1 0 1 0 1 \| 0 0 0 0 1 0 1 0 | 19 | 19 | | |
| **AAM = ASCII Adjust for Multiply** | 1 1 0 1 0 1 0 0 \| 0 0 0 0 1 0 1 0 | 17 | 17 | | |
| **CBW = Convert Byte to Word** | 1 0 0 1 1 0 0 0 | 3 | 3 | | |
| **CWD = Convert Word to Double Word** | 1 0 0 1 1 0 0 1 | 2 | 2 | | |
| **LOGIC** | | | | | |
| Shift Rotate Instructions | | | | | |
| Not Through Carry **(ROL, ROR, SAL, SAR, SHL,** and **SHR)** | | | | | |
| Register/Memory by 1 | 1 1 0 1 0 0 0 w \| mod TTT r/m | 3/7 | 3/7 | b | h |
| Register/Memory by CL | 1 1 0 1 0 0 1 w \| mod TTT r/m | 3/7 | 3/7 | b | h |
| Register/Memory by Immediate Count | 1 1 0 0 0 0 0 w \| mod TTT r/m \| immed 8-bit data | 3/7 | 3/7 | b | h |
| Through Carry **(RCL** and **RCR)** | | | | | |
| Register/Memory by 1 | 1 1 0 1 0 0 0 w \| mod TTT r/m | 9/10 | 9/10 | b | h |
| Register/Memory by CL | 1 1 0 1 0 0 1 w \| mod TTT r/m | 9/10 | 9/10 | b | h |
| Register/Memory by Immediate Count | 1 1 0 0 0 0 0 w \| mod TTT r/m \| immed 8-bit data | 9/10 | 9/10 | b | h |
| | **TTT Instruction**<br>0 0 0 ROL<br>0 0 1 ROR<br>0 1 0 RCL<br>0 1 1 RCR<br>1 0 0 SHL/SAL<br>1 0 1 SHR<br>1 1 1 SAR | | | | |
| **SHLD = Shift Left Double** | | | | | |
| Register/Memory by Immediate | 0 0 0 0 1 1 1 1 \| 1 0 1 0 0 1 0 0 \| mod reg r/m \| immed 8-bit data | 3/7 | 3/7 | | |
| Register/Memory by CL | 0 0 0 0 1 1 1 1 \| 1 0 1 0 0 1 0 1 \| mod reg r/m | 3/7 | 3/7 | | |
| **SHRD = Shift Right Double** | | | | | |
| Register/Memory by Immediate | 0 0 0 0 1 1 1 1 \| 1 0 1 0 1 1 0 0 \| mod reg r/m \| immed 8-bit data | 3/7 | 3/7 | | |
| Register/Memory by CL | 0 0 0 0 1 1 1 1 \| 1 0 1 0 1 1 0 1 \| mod reg r/m | 3/7 | 3/7 | | |
| **AND = And** | | | | | |
| Register to Register | 0 0 1 0 0 0 d w \| mod reg r/m | 2 | 2 | | |

**Table 6-1. Intel386™ DX Instruction Set Clock Count Summary** (Continued)

| INSTRUCTION | FORMAT | | | | CLOCK COUNT | | NOTES | |
|---|---|---|---|---|---|---|---|---|
| | | | | | Real Address Mode or Virtual 8086 Mode | Protected Virtual Address Mode | Real Address Mode or Virtual 8086 Mode | Protected Virtual Address Mode |
| **LOGIC** (Continued) | | | | | | | | |
| Register to Memory | 0 0 1 0 0 0 0 w | mod reg r/m | | | 7 | 7 | b | h |
| Memory to Register | 0 0 1 0 0 0 1 w | mod reg r/m | | | 6 | 6 | b | h |
| Immediate to Register/Memory | 1 0 0 0 0 0 s w | mod 1 0 0 r/m | immediate data | | 2/7 | 2/7 | b | h |
| Immediate to Accumulator (Short Form) | 0 0 1 0 0 1 0 w | immediate data | | | 2 | 2 | | |
| **TEST = And Function to Flags, No Result** | | | | | | | | |
| Register/Memory and Register | 1 0 0 0 0 1 0 w | mod reg r/m | | | 2/5 | 2/5 | b | h |
| Immediate Data and Register/Memory | 1 1 1 1 0 1 1 w | mod 0 0 0 r/m | immediate data | | 2/5 | 2/5 | b | h |
| Immediate Data and Accumulator (Short Form) | 1 0 1 0 1 0 0 w | immediate data | | | 2 | 2 | | |
| **OR = Or** | | | | | | | | |
| Register to Register | 0 0 0 0 1 0 d w | mod reg r/m | | | 2 | 2 | | |
| Register to Memory | 0 0 0 0 1 0 0 w | mod reg r/m | | | 7 | 7 | b | h |
| Memory to Register | 0 0 0 0 1 0 1 w | mod reg r/m | | | 6 | 6 | b | h |
| Immediate to Register/Memory | 1 0 0 0 0 0 s w | mod 0 0 1 r/m | immediate data | | 2/7 | 2/7 | b | h |
| Immediate to Accumulator (Short Form) | 0 0 0 0 1 1 0 w | immediate data | | | 2 | 2 | | |
| **XOR = Exclusive Or** | | | | | | | | |
| Register to Register | 0 0 1 1 0 0 d w | mod reg r/m | | | 2 | 2 | | |
| Register to Memory | 0 0 1 1 0 0 0 w | mod reg r/m | | | 7 | 7 | b | h |
| Memory to Register | 0 0 1 1 0 0 1 w | mod reg r/m | | | 6 | 6 | b | h |
| Immediate to Register/Memory | 1 0 0 0 0 0 s w | mod 1 1 0 r/m | immediate data | | 2/7 | 2/7 | b | h |
| Immediate to Accumulator (Short Form) | 0 0 1 1 0 1 0 w | immediate data | | | 2 | 2 | | |
| **NOT = Invert Register/Memory** | 1 1 1 1 0 1 1 w | mod 0 1 0 r/m | | | 2/6 | 2/6 | b | h |
| **STRING MANIPULATION** | | | | **Clk Count Virtual 8086 Mode** | | | | |
| **CMPS = Compare Byte Word** | 1 0 1 0 0 1 1 w | | | | 10 | 10 | b | h |
| **INS = Input Byte/Word from DX Port** | 0 1 1 0 1 1 0 w | | | †29 | 15 | 9*/29** | b | h, m |
| **LODS = Load Byte/Word to AL/AX/EAX** | 1 0 1 0 1 1 0 w | | | | 5 | 5 | b | h |
| **MOVS = Move Byte Word** | 1 0 1 0 0 1 0 w | | | | 8 | 8 | b | h |
| **OUTS = Output Byte/Word to DX Port** | 0 1 1 0 1 1 1 w | | | †28 | 14 | 8*/28** | b | h, m |
| **SCAS = Scan Byte Word** | 1 0 1 0 1 1 1 w | | | | 8 | 8 | b | h |
| **STOS = Store Byte/Word from AL/AX/EX** | 1 0 1 0 1 0 1 w | | | | 5 | 5 | b | h |
| **XLAT = Translate String** | 1 1 0 1 0 1 1 1 | | | | 5 | 5 | | h |
| **REPEATED STRING MANIPULATION** Repeated by Count in CX or ECX | | | | | | | | |
| **REPE CMPS = Compare String** (Find Non-Match) | 1 1 1 1 0 0 1 1 | 1 0 1 0 0 1 1 w | | | 5+9n | 5+9n | b | h |

* If CPL ≤ IOPL ** If CPL > IOPL

**Table 6-1. Intel386™ DX Instruction Set Clock Count Summary** (Continued)

| INSTRUCTION | FORMAT | | | | | CLOCK COUNT: Real Address Mode or Virtual 8086 Mode | CLOCK COUNT: Protected Virtual Address Mode | NOTES: Real Address Mode or Virtual 8086 Mode | NOTES: Protected Virtual Address Mode |
|---|---|---|---|---|---|---|---|---|---|
| **REPEATED STRING MANIPULATION** (Continued) | | | | | | | | | |
| **REPNE CMPS = Compare String** | | | | | **Clk Count Virtual 8086 Mode** | | | | |
| (Find Match) | 1 1 1 1 0 0 1 0 | 1 0 1 0 0 1 1 w | | | | 5+9n | 5+9n | b | h |
| **REP INS = Input String** | 1 1 1 1 0 0 1 0 | 0 1 1 0 1 1 0 w | | | †28+6n | 14+6n | 8+6n*/28+6n** | b | h, m |
| **REP LODS = Load String** | 1 1 1 1 0 0 1 0 | 1 0 1 0 1 1 0 w | | | | 5+6n | 5+6n | b | h |
| **REP MOVS = Move String** | 1 1 1 1 0 0 1 0 | 1 0 1 0 0 1 0 w | | | | 8+4n | 8+4n | b | h |
| **REP OUTS = Output String** | 1 1 1 1 0 0 1 0 | 0 1 1 0 1 1 1 w | | | †26+5n | 12+5n | 6+5n*/26+5n** | b | h, m |
| **REPE SCAS = Scan String** | | | | | | | | | |
| (Find Non-AL/AX/EAX) | 1 1 1 1 0 0 1 1 | 1 0 1 0 1 1 1 w | | | | 5+8n | 5+8n | b | h |
| **REPNE SCAS = Scan String** | | | | | | | | | |
| (Find AL/AX/EAX) | 1 1 1 1 0 0 1 0 | 1 0 1 0 1 1 1 w | | | | 5+8n | 5+8n | b | h |
| **REP STOS = Store String** | 1 1 1 1 0 0 1 0 | 1 0 1 0 1 0 1 w | | | | 5+5n | 5+5n | b | h |
| **BIT MANIPULATION** | | | | | | | | | |
| **BSF = Scan Bit Forward** | 0 0 0 0 1 1 1 1 | 1 0 1 1 1 1 0 0 | mod reg r/m | | | 11+3n | 11+3n | b | h |
| **BSR = Scan Bit Reverse** | 0 0 0 0 1 1 1 1 | 1 0 1 1 1 1 0 1 | mod reg r/m | | | 9+3n | 9+3n | b | h |
| **BT = Test Bit** | | | | | | | | | |
| Register/Memory, Immediate | 0 0 0 0 1 1 1 1 | 1 0 1 1 1 0 1 0 | mod 1 0 0 r/m | immed 8-bit data | | 3/6 | 3/6 | b | h |
| Register/Memory, Register | 0 0 0 0 1 1 1 1 | 1 0 1 0 0 0 1 1 | mod reg r/m | | | 3/12 | 3/12 | b | h |
| **BTC = Test Bit and Complement** | | | | | | | | | |
| Register/Memory, Immediate | 0 0 0 0 1 1 1 1 | 1 0 1 1 1 0 1 0 | mod 1 1 1 r/m | immed 8-bit data | | 6/8 | 6/8 | b | h |
| Register/Memory, Register | 0 0 0 0 1 1 1 1 | 1 0 1 1 1 0 1 1 | mod reg r/m | | | 6/13 | 6/13 | b | h |
| **BTR = Test Bit and Reset** | | | | | | | | | |
| Register/Memory, Immediate | 0 0 0 0 1 1 1 1 | 1 0 1 1 1 0 1 0 | mod 1 1 0 r/m | immed 8-bit data | | 6/8 | 6/8 | b | h |
| Register/Memory, Register | 0 0 0 0 1 1 1 1 | 1 0 1 1 0 0 1 1 | mod reg r/m | | | 6/13 | 6/13 | b | h |
| **BTS = Test Bit and Set** | | | | | | | | | |
| Register/Memory, Immediate | 0 0 0 0 1 1 1 1 | 1 0 1 1 1 0 1 0 | mod 1 0 1 r/m | immed 8-bit data | | 6/8 | 6/8 | b | h |
| Register/Memory, Register | 0 0 0 0 1 1 1 1 | 1 0 1 0 1 0 1 1 | mod reg r/m | | | 6/13 | 6/13 | b | h |
| **CONTROL TRANSFER** | | | | | | | | | |
| **CALL = Call** | | | | | | | | | |
| Direct Within Segment | 1 1 1 0 1 0 0 0 | full displacement | | | | 7+m | 7+m | b | r |
| Register/Memory | | | | | | | | | |
| Indirect Within Segment | 1 1 1 1 1 1 1 1 | mod 0 1 0 r/m | | | | 7+m/ 10+m | 7+m/ 10+m | b | h, r |
| Direct Intersegment | 1 0 0 1 1 0 1 0 | unsigned full offset, selector | | | | 17+m | 34+m | b | j,k,r |

**NOTES:**
† Clock count shown applies if I/O permission allows I/O to the port in virtual 8086 mode. If I/O bit map denies permission exception 13 fault occurs; refer to clock counts for INT 3 instruction.
* If CPL ≤ IOPL ** If CPL > IOPL

**Table 6-1. Intel386™ DX Instruction Set Clock Count Summary** (Continued)

| INSTRUCTION | FORMAT | CLOCK COUNT: Real Address Mode or Virtual 8086 Mode | CLOCK COUNT: Protected Virtual Address Mode | NOTES: Real Address Mode or Virtual 8086 Mode | NOTES: Protected Virtual Address Mode |
|---|---|---|---|---|---|
| **CONTROL TRANSFER** (Continued) | | | | | |
| Protected Mode Only (Direct Intersegment) | | | | | |
| Via Call Gate to Same Privilege Level | | | 52+m | | h,j,k,r |
| Via Call Gate to Different Privilege Level, (No Parameters) | | | 86+m | | h,j,k,r |
| Via Call Gate to Different Privilege Level, (x Parameters) | | | 94+4x+m | | h,j,k,r |
| From 80286 Task to 80286 TSS | | | 273 | | h,j,k,r |
| From 80286 Task to Intel386 DX TSS | | | 298 | | h,j,k,r |
| From 80286 Task to Virtual 8086 Task (Intel386 DX TSS) | | | 218 | | h,j,k,r |
| From Intel386 DX Task to 80286 TSS | | | 273 | | h,j,k,r |
| From Intel386 DX Task to Intel386 DX TSS | | | 300 | | h,j,k,r |
| From Intel386 DX Task to Virtual 8086 Task (Intel386 DX TSS) | | | 218 | | h,j,k,r |
| Indirect Intersegment | 1 1 1 1 1 1 1 1 \| mod 0 1 1 r/m | 22+m | 38+m | b | h,j,k,r |
| Protected Mode Only (Indirect Intersegment) | | | | | |
| Via Call Gate to Same Privilege Level | | | 56+m | | h,j,k,r |
| Via Call Gate to Different Privilege Level, (No Parameters) | | | 90+m | | h,j,k,r |
| Via Call Gate to Different Privilege Level, (x Parameters) | | | 98+4x+m | | h,j,k,r |
| From 80286 Task to 80286 TSS | | | 278 | | h,j,k,r |
| From 80286 Task to Intel386 DX TSS | | | 303 | | h,j,k,r |
| From 80286 Task to Virtual 8086 Task (Intel386 DX TSS) | | | 222 | | h,j,k,r |
| From Intel386 DX Task to 80286 TSS | | | 278 | | h,j,k,r |
| From Intel386 DX Task to Intel386 DX TSS | | | 305 | | h,j,k,r |
| From Intel386 DX Task to Virtual 8086 Task (Intel386 DX TSS) | | | 222 | | h,j,k,r |
| **JMP = Unconditional Jump** | | | | | |
| Short | 1 1 1 0 1 0 1 1 \| 8-bit displacement | 7+m | 7+m | | r |
| Direct within Segment | 1 1 1 0 1 0 0 1 \| full displacement | 7+m | 7+m | | r |
| Register/Memory Indirect within Segment | 1 1 1 1 1 1 1 1 \| mod 1 0 0 r/m | 7+m/ 10+m | 7+m/ 10+m | b | h,r |
| Direct Intersegment | 1 1 1 0 1 0 1 0 \| unsigned full offset, selector | 12+m | 27+m | | j,k,r |
| Protected Mode Only (Direct Intersegment) | | | | | |
| Via Call Gate to Same Privilege Level | | | 45+m | | h,j,k,r |
| From 80286 Task to 80286 TSS | | | 274 | | h,j,k,r |
| From 80286 Task to Intel386 DX TSS | | | 301 | | h,j,k,r |
| From 80286 Task to Virtual 8086 Task (Intel386 DX TSS) | | | 219 | | h,j,k,r |
| From Intel386 DX Task to 80286 TSS | | | 270 | | h,j,k,r |
| From Intel386 DX Task to Intel386 DX TSS | | | 303 | | h,j,k,r |
| From Intel386 DX Task to Virtual 8086 Task (Intel386 DX TSS) | | | 221 | | h,j,k,r |
| Indirect Intersegment | 1 1 1 1 1 1 1 1 \| mod 1 0 1 r/m | 17+m | 31+m | b | h,j,k,r |
| Protected Mode Only (Indirect Intersegment) | | | | | |
| Via Call Gate to Same Privilege Level | | | 49+m | | h,j,k,r |
| From 80286 Task to 80286 TSS | | | 279 | | h,j,k,r |
| From 80286 Task to Intel386 DX TSS | | | 306 | | h,j,k,r |
| From 80286 Task to Virtual 8086 Task (Intel386 DX TSS) | | | 223 | | h,j,k,r |
| From Intel386 DX Task to 80286 TSS | | | 275 | | h,j,k,r |
| From Intel386 DX Task to Intel386 DX TSS | | | 308 | | h,j,k,r |
| From Intel386 DX Task to Virtual 8086 Task (Intel386 DX TSS) | | | 225 | | h,j,k,r |

**Table 6-1. Intel386™ DX Instruction Set Clock Count Summary** (Continued)

| INSTRUCTION | FORMAT | | | CLOCK COUNT: Real Address Mode or Virtual 8086 Mode | CLOCK COUNT: Protected Virtual Address Mode | NOTES: Real Address Mode or Virtual 8086 Mode | NOTES: Protected Virtual Address Mode |
|---|---|---|---|---|---|---|---|
| **CONTROL TRANSFER** (Continued) | | | | | | | |
| **RET = Return from CALL:** | | | | | | | |
| Within Segment | 11000011 | | | 10 + m | 10 + m | b | g, h, r |
| Within Segment Adding Immediate to SP | 11000010 | 16-bit displ | | 10 + m | 10 + m | b | g, h, r |
| Intersegment | 11001011 | | | 18 + m | 32+m | b | g, h, j, k, r |
| Intersegment Adding Immediate to SP | 11001010 | 16-bit displ | | 18 + m | 32+m | b | g, h, j, k, r |
| Protected Mode Only (RET): | | | | | | | |
| to Different Privilege Level | | | | | | | |
| Intersegment | | | | | 69 | | h, j, k, r |
| Intersegment Adding Immediate to SP | | | | | 69 | | h, j, k, r |
| **CONDITIONAL JUMPS** | | | | | | | |
| NOTE: Times Are Jump "Taken or Not Taken" | | | | | | | |
| **JO = Jump on Overflow** | | | | | | | |
| 8-Bit Displacement | 01110000 | 8-bit displ | | 7 + m or 3 | 7 + m or 3 | | r |
| Full Displacement | 00001111 | 10000000 | full displacement | 7 + m or 3 | 7 + m or 3 | | r |
| **JNO = Jump on Not Overflow** | | | | | | | |
| 8-Bit Displacement | 01110001 | 8-bit displ | | 7 + m or 3 | 7 + m or 3 | | r |
| Full Displacement | 00001111 | 10000001 | full displacement | 7 + m or 3 | 7 + m or 3 | | r |
| **JB/JNAE = Jump on Below/Not Above or Equal** | | | | | | | |
| 8-Bit Displacement | 01110010 | 8-bit displ | | 7 + m or 3 | 7 + m or 3 | | r |
| Full Displacement | 00001111 | 10000010 | full displacement | 7 + m or 3 | 7 + m or 3 | | r |
| **JNB/JAE = Jump on Not Below/Above or Equal** | | | | | | | |
| 8-Bit Displacement | 01110011 | 8-bit displ | | 7 + m or 3 | 7 + m or 3 | | r |
| Full Displacement | 00001111 | 10000011 | full displacement | 7 + m or 3 | 7 + m or 3 | | r |
| **JE/JZ = Jump on Equal/Zero** | | | | | | | |
| 8-Bit Displacement | 01110100 | 8-bit displ | | 7 + m or 3 | 7 + m or 3 | | r |
| Full Displacement | 00001111 | 10000100 | full displacement | 7 + m or 3 | 7 + m or 3 | | r |
| **JNE/JNZ = Jump on Not Equal/Not Zero** | | | | | | | |
| 8-Bit Displacement | 01110101 | 8-bit displ | | 7 + m or 3 | 7 + m or 3 | | r |
| Full Displacement | 00001111 | 10000101 | full displacement | 7 + m or 3 | 7 + m or 3 | | r |
| **JBE/JNA = Jump on Below or Equal/Not Above** | | | | | | | |
| 8-Bit Displacement | 01110110 | 8-bit displ | | 7 + m or 3 | 7 + m or 3 | | r |
| Full Displacement | 00001111 | 10000110 | full displacement | 7 + m or 3 | 7 + m or 3 | | r |
| **JNBE/JA = Jump on Not Below or Equal/Above** | | | | | | | |
| 8-Bit Displacement | 01110111 | 8-bit displ | | 7 + m or 3 | 7 + m or 3 | | r |
| Full Displacement | 00001111 | 10000111 | full displacement | 7 + m or 3 | 7 + m or 3 | | r |
| **JS = Jump on Sign** | | | | | | | |
| 8-Bit Displacement | 01111000 | 8-bit displ | | 7 + m or 3 | 7 + m or 3 | | r |
| Full Displacement | 00001111 | 10001000 | full displacement | 7 + m or 3 | 7 + m or 3 | | r |

**Table 6-1. Intel386™ DX Instruction Set Clock Count Summary** (Continued)

| INSTRUCTION | FORMAT | | | CLOCK COUNT: Real Address Mode or Virtual 8086 Mode | CLOCK COUNT: Protected Virtual Address Mode | NOTES: Real Address Mode or Virtual 8086 Mode | NOTES: Protected Virtual Address Mode |
|---|---|---|---|---|---|---|---|
| **CONDITIONAL JUMPS** (Continued) | | | | | | | |
| **JNS = Jump on Not Sign** | | | | | | | |
| 8-Bit Displacement | 0 1 1 1 1 0 0 1 | 8-bit displ | | 7 + m or 3 | 7 + m or 3 | | r |
| Full Displacement | 0 0 0 0 1 1 1 1 | 1 0 0 0 1 0 0 1 | full displacement | 7 + m or 3 | 7 + m or 3 | | r |
| **JP/JPE = Jump on Parity/Parity Even** | | | | | | | |
| 8-Bit Displacement | 0 1 1 1 1 0 1 0 | 8-bit displ | | 7 + m or 3 | 7 + m or 3 | | r |
| Full Displacement | 0 0 0 0 1 1 1 1 | 1 0 0 0 1 0 1 0 | full displacement | 7 + m or 3 | 7 + m or 3 | | r |
| **JNP/JPO = Jump on Not Parity/Parity Odd** | | | | | | | |
| 8-Bit Displacement | 0 1 1 1 1 0 1 1 | 8-bit displ | | 7 + m or 3 | 7 + m or 3 | | r |
| Full Displacement | 0 0 0 0 1 1 1 1 | 1 0 0 0 1 0 1 1 | full displacement | 7 + m or 3 | 7 + m or 3 | | r |
| **JL/JNGE = Jump on Less/Not Greater or Equal** | | | | | | | |
| 8-Bit Displacement | 0 1 1 1 1 1 0 0 | 8-bit displ | | 7 + m or 3 | 7 + m or 3 | | r |
| Full Displacement | 0 0 0 0 1 1 1 1 | 1 0 0 0 1 1 0 0 | full displacement | 7 + m or 3 | 7 + m or 3 | | r |
| **JNL/JGE = Jump on Not Less/Greater or Equal** | | | | | | | |
| 8-Bit Displacement | 0 1 1 1 1 1 0 1 | 8-bit displ | | 7 + m or 3 | 7 + m or 3 | | r |
| Full Displacement | 0 0 0 0 1 1 1 1 | 1 0 0 0 1 1 0 1 | full displacement | 7 + m or 3 | 7 + m or 3 | | r |
| **JLE/JNG = Jump on Less or Equal/Not Greater** | | | | | | | |
| 8-Bit Displacement | 0 1 1 1 1 1 1 0 | 8-bit displ | | 7 + m or 3 | 7 + m or 3 | | r |
| Full Displacement | 0 0 0 0 1 1 1 1 | 1 0 0 0 1 1 1 0 | full displacement | 7 + m or 3 | 7 + m or 3 | | r |
| **JNLE/JG = Jump on Not Less or Equal/Greater** | | | | | | | |
| 8-Bit Displacement | 0 1 1 1 1 1 1 1 | 8-bit displ | | 7 + m or 3 | 7 + m or 3 | | r |
| Full Displacement | 0 0 0 0 1 1 1 1 | 1 0 0 0 1 1 1 1 | full displacement | 7 + m or 3 | 7 + m or 3 | | r |
| **JCXZ = Jump on CX Zero** | 1 1 1 0 0 0 1 1 | 8-bit displ | | 9 + m or 5 | 9 + m or 5 | | r |
| **JECXZ = Jump on ECX Zero** | 1 1 1 0 0 0 1 1 | 8-bit displ | | 9 + m or 5 | 9 + m or 5 | | r |
| (Address Size Prefix Differentiates JCXZ from JECXZ) | | | | | | | |
| **LOOP = Loop CX Times** | 1 1 1 0 0 0 1 0 | 8-bit displ | | 11 + m | 11 + m | | r |
| **LOOPZ/LOOPE = Loop with Zero/Equal** | 1 1 1 0 0 0 0 1 | 8-bit displ | | 11 + m | 11 + m | | r |
| **LOOPNZ/LOOPNE = Loop While Not Zero** | 1 1 1 0 0 0 0 0 | 8-bit displ | | 11 + m | 11 + m | | r |
| **CONDITIONAL BYTE SET** | | | | | | | |
| NOTE: Times Are Register/Memory | | | | | | | |
| **SETO = Set Byte on Overflow** | | | | | | | |
| To Register/Memory | 0 0 0 0 1 1 1 1 | 1 0 0 1 0 0 0 0 | mod 0 0 0 r/m | 4/5 | 4/5 | | h |
| **SETNO = Set Byte on Not Overflow** | | | | | | | |
| To Register/Memory | 0 0 0 0 1 1 1 1 | 1 0 0 1 0 0 0 1 | mod 0 0 0 r/m | 4/5 | 4/5 | | h |
| **SETB/SETNAE = Set Byte on Below/Not Above or Equal** | | | | | | | |
| To Register/Memory | 0 0 0 0 1 1 1 1 | 1 0 0 1 0 0 1 0 | mod 0 0 0 r/m | 4/5 | 4/5 | | h |

**Table 6-1. Intel386™ DX Instruction Set Clock Count Summary** (Continued)

| INSTRUCTION | FORMAT | | | CLOCK COUNT: Real Address Mode or Virtual 8086 Mode | CLOCK COUNT: Protected Virtual Address Mode | NOTES: Real Address Mode or Virtual 8086 Mode | NOTES: Protected Virtual Address Mode |
|---|---|---|---|---|---|---|---|
| **CONDITIONAL BYTE SET** (Continued) | | | | | | | |
| **SETNB = Set Byte on Not Below/Above or Equal** | | | | | | | |
| To Register/Memory | 0 0 0 0 1 1 1 1 | 1 0 0 1 0 0 1 1 | mod 0 0 0 r/m | 4/5 | 4/5 | | h |
| **SETE/SETZ = Set Byte on Equal/Zero** | | | | | | | |
| To Register/Memory | 0 0 0 0 1 1 1 1 | 1 0 0 1 0 1 0 0 | mod 0 0 0 r/m | 4/5 | 4/5 | | h |
| **SETNE/SETNZ = Set Byte on Not Equal/Not Zero** | | | | | | | |
| To Register/Memory | 0 0 0 0 1 1 1 1 | 1 0 0 1 0 1 0 1 | mod 0 0 0 r/m | 4/5 | 4/5 | | h |
| **SETBE/SETNA = Set Byte on Below or Equal/Not Above** | | | | | | | |
| To Register/Memory | 0 0 0 0 1 1 1 1 | 1 0 0 1 0 1 1 0 | mod 0 0 0 r/m | 4/5 | 4/5 | | h |
| **SETNBE/SETA = Set Byte on Not Below or Equal/Above** | | | | | | | |
| To Register/Memory | 0 0 0 0 1 1 1 1 | 1 0 0 1 0 1 1 1 | mod 0 0 0 r/m | 4/5 | 4/5 | | h |
| **SETS = Set Byte on Sign** | | | | | | | |
| To Register/Memory | 0 0 0 0 1 1 1 1 | 1 0 0 1 1 0 0 0 | mod 0 0 0 r/m | 4/5 | 4/5 | | h |
| **SETNS = Set Byte on Not Sign** | | | | | | | |
| To Register/Memory | 0 0 0 0 1 1 1 1 | 1 0 0 1 1 0 0 1 | mod 0 0 0 r/m | 4/5 | 4/5 | | h |
| **SETP/SETPE = Set Byte on Parity/Parity Even** | | | | | | | |
| To Register/Memory | 0 0 0 0 1 1 1 1 | 1 0 0 1 1 0 1 0 | mod 0 0 0 r/m | 4/5 | 4/5 | | h |
| **SETNP/SETPO = Set Byte on Not Parity/Parity Odd** | | | | | | | |
| To Register/Memory | 0 0 0 0 1 1 1 1 | 1 0 0 1 1 0 1 1 | mod 0 0 0 r/m | 4/5 | 4/5 | | h |
| **SETL/SETNGE = Set Byte on Less/Not Greater or Equal** | | | | | | | |
| To Register/Memory | 0 0 0 0 1 1 1 1 | 1 0 0 1 1 1 0 0 | mod 0 0 0 r/m | 4/5 | 4/5 | | h |
| **SETNL/SETGE = Set Byte on Not Less/Greater or Equal** | | | | | | | |
| To Register/Memory | 0 0 0 0 1 1 1 1 | 0 1 1 1 1 1 0 1 | mod 0 0 0 r/m | 4/5 | 4/5 | | h |
| **SETLE/SETNG = Set Byte on Less or Equal/Not Greater** | | | | | | | |
| To Register/Memory | 0 0 0 0 1 1 1 1 | 1 0 0 1 1 1 1 0 | mod 0 0 0 r/m | 4/5 | 4/5 | | h |
| **SETNLE/SETG = Set Byte on Not Less or Equal/Greater** | | | | | | | |
| To Register/Memory | 0 0 0 0 1 1 1 1 | 1 0 0 1 1 1 1 1 | mod 0 0 0 r/m | 4/5 | 4/5 | | h |
| **ENTER = Enter Procedure** | 1 1 0 0 1 0 0 0 | 16-bit displacement, 8-bit level | | | | | |
| L = 0 | | | | 10 | 10 | b | h |
| L = 1 | | | | 12 | 12 | b | h |
| L > 1 | | | | 15 + 4(n − 1) | 15 + 4(n − 1) | b | h |
| **LEAVE = Leave Procedure** | 1 1 0 0 1 0 0 1 | | | 4 | 4 | b | h |

**Table 6-1. Intel386™ DX Instruction Set Clock Count Summary** (Continued)

| INSTRUCTION | FORMAT | CLOCK COUNT: Real Address Mode or Virtual 8086 Mode | CLOCK COUNT: Protected Virtual Address Mode | NOTES: Real Address Mode or Virtual 8086 Mode | NOTES: Protected Virtual Address Mode |
|---|---|---|---|---|---|
| **INTERRUPT INSTRUCTIONS** | | | | | |
| **INT = Interrupt:** | | | | | |
| Type Specified | 1 1 0 0 1 1 0 1 \| type | 37 | | b | |
| Type 3 | 1 1 0 0 1 1 0 0 | 33 | | b | |
| **INTO = Interrupt 4 if Overflow Flag Set** | 1 1 0 0 1 1 1 0 | | | | |
| If OF = 1 | | 35 | | b, e | |
| If OF = 0 | | 3 | 3 | b, e | |
| **Bound = Interrupt 5 if Detect Value Out of Range** | 0 1 1 0 0 0 1 0 \| mod reg r/m | | | | |
| If Out of Range | | 44 | | b, e | e, g, h, j, k, r |
| If In Range | | 10 | 10 | b, e | e, g, h, j, k, r |
| **Protected Mode Only (INT)** | | | | | |
| **INT: Type Specified** | | | | | |
| Via Interrupt or Trap Gate to Same Privilege Level | | | 59 | | g, j, k, r |
| Via Interrupt or Trap Gate to Different Privilege Level | | | 99 | | g, j, k, r |
| From 80286 Task to 80286 TSS via Task Gate | | | 282 | | g, j, k, r |
| From 80286 Task to Intel386 DX TSS via Task Gate | | | 309 | | g, j, k, r |
| From 80286 Task to virt 8086 md via Task Gate | | | 226 | | g, j, k, r |
| From Intel386 DX Task to 80286 TSS via Task Gate | | | 284 | | g, j, k, r |
| From Intel386 DX Task to Intel386 DX TSS via Task Gate | | | 311 | | g, j, k, r |
| From Intel386 DX Task to virt 8086 md via Task Gate | | | 228 | | g, j, k, r |
| From virt 8086 md to 80286 TSS via Task Gate | | | 289 | | g, j, k, r |
| From virt 8086 md to Intel386 DX TSS via Task Gate | | | 316 | | g, j, k, r |
| From virt 8086 md to priv level 0 via Trap Gate or Interrupt Gate | | | 119 | | |
| **INT: TYPE 3** | | | | | |
| Via Interrupt or Trap Gate to Same Privilege Level | | | 59 | | g, j, k, r |
| Via Interrupt or Trap Gate to Different Privilege Level | | | 99 | | g, j, k, r |
| From 80286 Task to 80286 TSS via Task Gate | | | 278 | | g, j, k, r |
| From 80286 Task to Intel386 DX TSS via Task Gate | | | 305 | | g, j, k, r |
| From 80286 Task to Virt 8086 md via Task Gate | | | 222 | | g, j, k, r |
| From Intel386 DX Task to 80286 TSS via Task Gate | | | 280 | | g, j, k, r |
| From Intel386 DX Task to Intel386 DX TSS via Task Gate | | | 307 | | g, j, k, r |
| From Intel386 DX Task to Virt 8086 md via Task Gate | | | 224 | | g, j, k, r |
| From virt 8086 md to 80286 TSS via Task Gate | | | 285 | | g, j, k, r |
| From virt 8086 md to Intel386 DX TSS via Task Gate | | | 312 | | g, j, k, r |
| From virt 8086 md to priv level 0 via Trap Gate or Interrupt Gate | | | 119 | | |
| **INTO:** | | | | | |
| Via Interrupt or Trap Grate to Same Privilege Level | | | 59 | | g, j, k, r |
| Via Interrupt or Trap Gate to Different Privilege Level | | | 99 | | g, j, k, r |
| From 80286 Task to 80286 TSS via Task Gate | | | 280 | | g, j, k, r |
| From 80286 Task to Intel386 DX TSS via Task Gate | | | 307 | | g, j, k, r |
| From 80286 Task to virt 8086 md via Task Gate | | | 224 | | g, j, k, r |
| From Intel386 DX Task to 80286 TSS via Task Gate | | | 282 | | g, j, k, r |
| From Intel386 DX Task to Intel386 DX TSS via Task Gate | | | 309 | | g, j, k, r |
| From Intel386 DX Gate | | | 225 | | g, j, k, r |
| From virt 8086 md to 80286 TSS via Task Gate | | | 287 | | g, j, k, r |
| From virt 8086 md to Intel386 DX TSS via Task Gate | | | 314 | | g, j, k, r |
| From virt 8086 md to priv level 0 via Trap Gate or Interrupt Gate | | | 119 | | |

**Table 6-1. Intel386™ DX Instruction Set Clock Count Summary** (Continued)

| INSTRUCTION | FORMAT | CLOCK COUNT: Real Address Mode or Virtual 8086 Mode | CLOCK COUNT: Protected Virtual Address Mode | NOTES: Real Address Mode or Virtual 8086 Mode | NOTES: Protected Virtual Address Mode |
|---|---|---|---|---|---|
| **INTERRUPT INSTRUCTIONS** (Continued) | | | | | |
| **BOUND:** | | | | | |
| Via Interrupt or Trap Gate to Same Privilege Level | | | 59 | | g, j, k, r |
| Via Interrupt or Trap Gate to Different Privilege Level | | | 99 | | g, j, k, r |
| From 80286 Task to 80286 TSS via Task Gate | | | 254 | | g, j, k, r |
| From 80286 Task to Intel386 DX TSS via Task Gate | | | 284 | | g, j, k, r |
| From 80268 Task to virt 8086 Mode via Task Gate | | | 231 | | g, j, k, r |
| From Intel386 DX Task to 80286 TSS via Task Gate | | | 264 | | g, j, k, r |
| From Intel386 DX Task to Intel386 DX TSS via Task Gate | | | 294 | | g, j, k, r |
| From 80368 Task to virt 8086 Mode via Task Gate | | | 243 | | g, j, k, r, |
| From virt 8086 Mode to 80286 TSS via Task Gate | | | 264 | | g, j, k, r |
| From virt 8086 Mode to Intel386 DX TSS via Task Gate | | | 294 | | g, j, k, r |
| From virt 8086 md to priv level 0 via Trap Gate or Interrupt Gate | | | 119 | | |
| **INTERRUPT RETURN** | | | | | |
| **IRET = Interrupt Return** | 11001111 | 22 | | | g, h, j, k, r |
| Protected Mode Only (IRET) | | | | | |
| To the Same Privilege Level (within task) | | | 38 | | g, h, j, k, r |
| To Different Privilege Level (within task) | | | 82 | | g, h, j, k, r |
| From 80286 Task to 80286 TSS | | | 232 | | h, j, k, r |
| From 80286 Task to Intel386 DX TSS | | | 265 | | h, j, k, r |
| From 80286 Task to Virtual 8086 Task | | | 213 | | h, j, k, r |
| From 80286 Task to Virtual 8086 Mode (within task) | | | 60 | | |
| From Intel386 DX Task to 80286 TSS | | | 271 | | h, j, k, r |
| From Intel386 DX Task to Intel386 DX TSS | | | 275 | | h, j, k, r |
| From Intel386 DX Task to Virtual 8086 Task | | | 223 | | h, j, k, r |
| From Intel386 DX Task to Virtual 8086 Mode (within task) | | | 60 | | |
| **PROCESSOR CONTROL** | | | | | |
| **HLT = HALT** | 11110100 | 5 | 5 | | l |
| **MOV = Move to and From Control/Debug/Test Registers** | | | | | |
| CR0/CR2/CR3 from register | 00001111 00100010 11eeereg | 11/4/5 | 11/4/5 | | l |
| Register From CR0–3 | 00001111 00100000 11eeereg | 6 | 6 | | l |
| DR0–3 From Register | 00001111 00100011 11eeereg | 22 | 22 | | l |
| DR6–7 From Register | 00001111 00100011 11eeereg | 16 | 16 | | l |
| Register from DR6–7 | 00001111 00100001 11eeereg | 14 | 14 | | l |
| Register from DR0–3 | 00001111 00100001 11eeereg | 22 | 22 | | l |
| TR6–7 from Register | 00001111 00100110 11eeereg | 12 | 12 | | l |
| Register from TR6–7 | 00001111 00100100 11eeereg | 12 | 12 | | l |
| **NOP = No Operation** | 10010000 | 3 | 3 | | |
| **WAIT = Wait until BUSY# pin is negated** | 10011011 | 7 | 7 | | |

**Table 6-1. Intel386™ DX Instruction Set Clock Count Summary** (Continued)

| INSTRUCTION | FORMAT | CLOCK COUNT: Real Address Mode or Virtual 8086 Mode | CLOCK COUNT: Protected Virtual Address Mode | NOTES: Real Address Mode or Virtual 8086 Mode | NOTES: Protected Virtual Address Mode |
|---|---|---|---|---|---|
| **PROCESSOR EXTENSION INSTRUCTIONS** | | | | | |
| Processor Extension Escape | 11011TTT mod LLL r/m<br>TTT and LLL bits are opcode information for coprocessor. | See 80287/80Intel387 data sheets for clock counts | | | h |
| **PREFIX BYTES** | | | | | |
| **Address Size Prefix** | 01100111 | 0 | 0 | | |
| **LOCK = Bus Lock Prefix** | 11110000 | 0 | 0 | | m |
| **Operand Size Prefix** | 01100110 | 0 | 0 | | |
| **Segment Override Prefix** | | | | | |
| **CS:** | 00101110 | 0 | 0 | | |
| **DS:** | 00111110 | 0 | 0 | | |
| **ES:** | 00100110 | 0 | 0 | | |
| **FS:** | 01100100 | 0 | 0 | | |
| **GS:** | 01100101 | 0 | 0 | | |
| **SS:** | 00110110 | 0 | 0 | | |
| **PROTECTION CONTROL** | | | | | |
| **ARPL = Adjust Requested Privilege Level** | | | | | |
| From Register/Memory | 01100011 mod reg r/m | N/A | 20/21 | a | h |
| **LAR = Load Access Rights** | | | | | |
| From Register/Memory | 00001111 00000010 mod reg r/m | N/A | 15/16 | a | g, h, j, p |
| **LGDT = Load Global Descriptor** | | | | | |
| Table Register | 00001111 00000001 mod010 r/m | 11 | 11 | b, c | h, l |
| **LIDT = Load Interrupt Descriptor** | | | | | |
| Table Register | 00001111 00000001 mod011 r/m | 11 | 11 | b, c | h, l |
| **LLDT = Load Local Descriptor** | | | | | |
| Table Register to Register/Memory | 00001111 00000000 mod010 r/m | N/A | 20/24 | a | g, h, j, l |
| **LMSW = Load Machine Status Word** | | | | | |
| From Register/Memory | 00001111 00000001 mod110 r/m | 11/14 | 11/14 | b, c | h, l |
| **LSL = Load Segment Limit** | | | | | |
| From Register/Memory | 00001111 00000011 mod reg r/m | | | | |
| Byte-Granular Limit | | N/A | 21/22 | a | g, h, j, p |
| Page-Granular Limit | | N/A | 25/26 | a | g, h, j, p |
| **LTR = Load Task Register** | | | | | |
| From Register/Memory | 00001111 00000000 mod011 r/m | N/A | 23/27 | a | g, h, j, l |
| **SGDT = Store Global Descriptor** | | | | | |
| **Table Register** | 00001111 00000001 mod000 r/m | 9 | 9 | b, c | h |
| **SIDT = Store Interrupt Descriptor** | | | | | |
| **Table Register** | 00001111 00000001 mod001 r/m | 9 | 9 | b, c | h |
| **SLDT = Store Local Descriptor Table Register** | | | | | |
| To Register/Memory | 00001111 00000000 mod000 r/m | N/A | 2/2 | a | h |

**Table 6-1. Intel386™ DX Instruction Set Clock Count Summary** (Continued)

| INSTRUCTION | | FORMAT | | | CLOCK COUNT | | NOTES | |
|---|---|---|---|---|---|---|---|---|
| | | | | | Real Address Mode or Virtual 8086 Mode | Protected Virtual Address Mode | Real Address Mode or Virtual 8086 Mode | Protected Virtual Address Mode |
| **SMSW** | = **Store Machine Status Word** | 00001111 | 00000001 | mod 1 0 0 r/m | 2/2 | 2/2 | b, c | h, l |
| **STR** | = **Store Task Register** | | | | | | | |
| | To Register/Memory | 00001111 | 00000000 | mod 0 0 1 r/m | N/A | 2/2 | a | h |
| **VERR** | = **Verify Read Accesss** | | | | | | | |
| | Register/Memory | 00001111 | 00000000 | mod 1 0 0 r/m | N/A | 10/11 | a | g, h, j, p |
| **VERW** | = **Verify Write Accesss** | 00001111 | 00000000 | mod 1 0 1 r/m | N/A | 15/16 | a | g, h, j, p |

**INSTRUCTION NOTES FOR TABLE 6-1**

**Notes a through c apply to Intel386 DX Real Address Mode only:**
a. This is a Protected Mode instruction. Attempted execution in Real Mode will result in exception 6 (invalid opcode).
b. Exception 13 fault (general protection) will occur in Real Mode if an operand reference is made that partially or fully extends beyond the maximum CS, DS, ES, FS or GS limit, FFFFH. Exception 12 fault (stack segment limit violation or not present) will occur in Real Mode if an operand reference is made that partially or fully extends beyond the maximum SS limit.
c. This instruction may be executed in Real Mode. In Real Mode, its purpose is primarily to initialize the CPU for Protected Mode.

**Notes d through g apply to Intel386 DX Real Address Mode and Intel386 DX Protected Virtual Address Mode:**
d. The Intel386 DX uses an early-out multiply algorithm. The actual number of clocks depends on the position of the most significant bit in the operand (multiplier).
Clock counts given are minimum to maximum. To calculate actual clocks use the following formula:
Actual Clock = if m < > 0 then max ([$\log_2 |m|$], 3) + b clocks:
if m = 0 then 3+b clocks
In this formula, m is the multiplier, and
b = 9 for register to register,
b = 12 for memory to register,
b = 10 for register with immediate to register,
b = 11 for memory with immediate to register.
e. An exception may occur, depending on the value of the operand.
f. LOCK# is automatically asserted, regardless of the presence or absence of the LOCK# prefix.
g. LOCK# is asserted during descriptor table accesses.

**Notes h through r apply to Intel386 DX Protected Virtual Address Mode only:**
h. Exception 13 fault (general protection violation) will occur if the memory operand in CS, DS, ES, FS or GS cannot be used due to either a segment limit violation or access rights violation. If a stack limit is violated, an exception 12 (stack segment limit violation or not present) occurs.
i. For segment load operations, the CPL, RPL, and DPL must agree with the privilege rules to avoid an exception 13 fault (general protection violation). The segment's descriptor must indicate ''present'' or exception 11 (CS, DS, ES, FS, GS not present). If the SS register is loaded and a stack segment not present is detected, an exception 12 (stack segment limit violation or not present) occurs.
j. All segment descriptor accesses in the GDT or LDT made by this instruction will automatically assert LOCK# to maintain descriptor integrity in multiprocessor systems.
k. JMP, CALL, INT, RET and IRET instructions referring to another code segment will cause an exception 13 (general protection violation) if an applicable privilege rule is violated.
l. An exception 13 fault occurs if CPL is greater than 0 (0 is the most privileged level).
m. An exception 13 fault occurs if CPL is greater than IOPL.
n. The IF bit of the flag register is not updated if CPL is greater than IOPL. The IOPL and VM fields of the flag register are updated only if CPL = 0.
o. The PE bit of the MSW (CR0) cannot be reset by this instruction. Use MOV into CR0 if desiring to reset the PE bit.
p. Any violation of privilege rules as applied to the selector operand does not cause a protection exception; rather, the zero flag is cleared.
q. If the coprocessor's memory operand violates a segment limit or segment access rights, an exception 13 fault (general protection exception) will occur before the ESC instruction is executed. An exception 12 fault (stack segment limit violation or not present) will occur if the stack limit is violated by the operand's starting address.
r. The destination of a JMP, CALL, INT, RET or IRET must be in the defined limit of a code segment or an exception 13 fault (general protection violation) will occur.

## 6.2 INSTRUCTION ENCODING

### 6.2.1 Overview

All instruction encodings are subsets of the general instruction format shown in Figure 6-1. Instructions consist of one or two primary opcode bytes, possibly an address specifier consisting of the ‘‘mod r/m’’ byte and ‘‘scaled index’’ byte, a displacement if required, and an immediate data field if required.

Within the primary opcode or opcodes, smaller encoding fields may be defined. These fields vary according to the class of operation. The fields define such information as direction of the operation, size of the displacements, register encoding, or sign extension.

Almost all instructions referring to an operand in memory have an addressing mode byte following the primary opcode byte(s). This byte, the mod r/m byte, specifies the address mode to be used. Certain encodings of the mod r/m byte indicate a second addressing byte, the scale-index-base byte, follows the mod r/m byte to fully specify the addressing mode.

Addressing modes can include a displacement immediately following the mod r/m byte, or scaled index byte. If a displacement is present, the possible sizes are 8, 16 or 32 bits.

If the instruction specifies an immediate operand, the immediate operand follows any displacement bytes. The immediate operand, if specified, is always the last field of the instruction.

Figure 6-1 illustrates several of the fields that can appear in an instruction, such as the mod field and the r/m field, but the Figure does not show all fields. Several smaller fields also appear in certain instructions, sometimes within the opcode bytes themselves. Table 6-2 is a complete list of all fields appearing in the Intel386 DX instruction set. Further ahead, following Table 6-2, are detailed tables for each field.

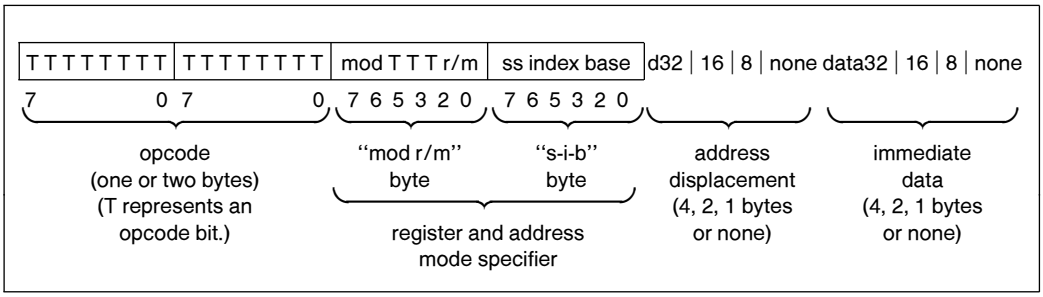


**Figure 6-1. General Instruction Format**

**Table 6-2. Fields within Intel386™ DX Instructions**

| Field Name | Description | Number of Bits |
|---|---|---|
| w | Specifies if Data is Byte or Full Size (Full Size is either 16 or 32 Bits | 1 |
| d | Specifies Direction of Data Operation | 1 |
| s | Specifies if an Immediate Data Field Must be Sign-Extended | 1 |
| reg | General Register Specifier | 3 |
| mod r/m | Address Mode Specifier (Effective Address can be a General Register) | 2 for mod; 3 for r/m |
| ss | Scale Factor for Scaled Index Address Mode | 2 |
| index | General Register to be used as Index Register | 3 |
| base | General Register to be used as Base Register | 3 |
| sreg2 | Segment Register Specifier for CS, SS, DS, ES | 2 |
| sreg3 | Segment Register Specifier for CS, SS, DS, ES, FS, GS | 3 |
| tttn | For Conditional Instructions, Specifies a Condition Asserted or a Condition Negated | 4 |

**Note:** Table 6-1 shows encoding of individual instructions.

### 6.2.2 32-Bit Extensions of the Instruction Set

With the Intel386 DX, the 8086/80186/80286 instruction set is extended in two orthogonal directions: 32-bit forms of all 16-bit instructions are added to support the 32-bit data types, and 32-bit addressing modes are made available for all instructions referencing memory. This orthogonal instruction set extension is accomplished having a Default (D) bit in the code segment descriptor, and by having 2 prefixes to the instruction set.

Whether the instruction defaults to operations of 16 bits or 32 bits depends on the setting of the D bit in the code segment descriptor, which gives the default length (either 32 bits or 16 bits) for both operands and effective addresses when executing that code segment. In the Real Address Mode or Virtual 8086 Mode, no code segment descriptors are used, but a D value of 0 is assumed internally by the Intel386 DX when operating in those modes (for 16-bit default sizes compatible with the 8086/80186/80286).

Two prefixes, the Operand Size Prefix and the Effective Address Size Prefix, allow overriding individually the Default selection of operand size and effective address size. These prefixes may precede any opcode bytes and affect only the instruction they precede. If necessary, one or both of the prefixes may be placed before the opcode bytes. The presence of the Operand Size Prefix and the Effective Address Prefix will toggle the operand size or the effective address size, respectively, to the value ''opposite'' from the Default setting. For example, if the default operand size is for 32-bit data operations, then presence of the Operand Size Prefix toggles the instruction to 16-bit data operation. As another example, if the default effective address size is 16 bits, presence of the Effective Address Size prefix toggles the instruction to use 32-bit effective address computations.

These 32-bit extensions are available in all Intel386 DX modes, including the Real Address Mode or the Virtual 8086 Mode. In these modes the default is always 16 bits, so prefixes are needed to specify 32-bit operands or addresses. For instructions with more than one prefix, the order of prefixes is unimportant.

Unless specified otherwise, instructions with 8-bit and 16-bit operands do not affect the contents of the high-order bits of the extended registers.

### 6.2.3 Encoding of Instruction Fields

Within the instruction are several fields indicating register selection, addressing mode and so on. The exact encodings of these fields are defined immediately ahead.

#### 6.2.3.1 ENCODING OF OPERAND LENGTH (w) FIELD

For any given instruction performing a data operation, the instruction is executing as a 32-bit operation or a 16-bit operation. Within the constraints of the operation size, the w field encodes the operand size as either one byte or the full operation size, as shown in the table below.

| w Field | Operand Size During 16-Bit Data Operations | Operand Size During 32-Bit Data Operations |
|---|---|---|
| 0 | 8 Bits | 8 Bits |
| 1 | 16 Bits | 32 Bits |

#### 6.2.3.2 ENCODING OF THE GENERAL REGISTER (reg) FIELD

The general register is specified by the reg field, which may appear in the primary opcode bytes, or as the reg field of the ''mod r/m'' byte, or as the r/m field of the ''mod r/m'' byte.

**Encoding of reg Field When w Field is not Present in Instruction**

| reg Field | Register Selected During 16-Bit Data Operations | Register Selected During 32-Bit Data Operations |
|---|---|---|
| 000 | AX | EAX |
| 001 | CX | ECX |
| 010 | DX | EDX |
| 011 | BX | EBX |
| 100 | SP | ESP |
| 101 | BP | EBP |
| 110 | SI | ESI |
| 111 | DI | EDI |

**Encoding of reg Field When w Field is Present in Instruction**

| Register Specified by reg Field During 16-Bit Data Operations: | | |
|---|---|---|
| reg | Function of w Field | |
| | (when w = 0) | (when w = 1) |
| 000 | AL | AX |
| 001 | CL | CX |
| 010 | DL | DX |
| 011 | BL | BX |
| 100 | AH | SP |
| 101 | CH | BP |
| 110 | DH | SI |
| 111 | BH | DI |

| Register Specified by reg Field During 32-Bit Data Operations | | |
|---|---|---|
| reg | Function of w Field | |
| | (when w = 0) | (when w = 1) |
| 000 | AL | EAX |
| 001 | CL | ECX |
| 010 | DL | EDX |
| 011 | BL | EBX |
| 100 | AH | ESP |
| 101 | CH | EBP |
| 110 | DH | ESI |
| 111 | BH | EDI |

#### 6.2.3.3 ENCODING OF THE SEGMENT REGISTER (sreg) FIELD

The sreg field in certain instructions is a 2-bit field allowing one of the four 80286 segment registers to be specified. The sreg field in other instructions is a 3-bit field, allowing the Intel386 DX FS and GS segment registers to be specified.

**2-Bit sreg2 Field**

| 2-Bit sreg2 Field | Segment Register Selected |
|---|---|
| 00 | ES |
| 01 | CS |
| 10 | SS |
| 11 | DS |

**3-Bit sreg3 Field**

| 3-Bit sreg3 Field | Segment Register Selected |
|---|---|
| 000 | ES |
| 001 | CS |
| 010 | SS |
| 011 | DS |
| 100 | FS |
| 101 | GS |
| 110 | do not use |
| 111 | do not use |

#### 6.2.3.4 ENCODING OF ADDRESS MODE

Except for special instructions, such as PUSH or POP, where the addressing mode is pre-determined, the addressing mode for the current instruction is specified by addressing bytes following the primary opcode. The primary addressing byte is the ‘‘mod r/m’’ byte, and a second byte of addressing information, the ‘‘s-i-b’’ (scale-index-base) byte, can be specified.

The s-i-b byte (scale-index-base byte) is specified when using 32-bit addressing mode and the ‘‘mod r/m’’ byte has r/m = 100 and mod = 00, 01 or 10. When the sib byte is present, the 32-bit addressing mode is a function of the mod, ss, index, and base fields.

The primary addressing byte, the ‘‘mod r/m’’ byte, also contains three bits (shown as TTT in Figure 6-1) sometimes used as an extension of the primary opcode. The three bits, however, may also be used as a register field (reg).

When calculating an effective address, either 16-bit addressing or 32-bit addressing is used. 16-bit addressing uses 16-bit address components to calculate the effective address while 32-bit addressing uses 32-bit address components to calculate the effective address. When 16-bit addressing is used, the ‘‘mod r/m’’ byte is interpreted as a 16-bit addressing mode specifier. When 32-bit addressing is used, the ‘‘mod r/m’’ byte is interpreted as a 32-bit addressing mode specifier.

Tables on the following three pages define all encodings of all 16-bit addressing modes and 32-bit addressing modes.

**Encoding of 16-bit Address Mode with "mod r/m" Byte**

| mod r/m | Effective Address |
|---|---|
| 00 000 | DS:[BX + SI] |
| 00 001 | DS:[BX + DI] |
| 00 010 | SS:[BP + SI] |
| 00 011 | SS:[BP + DI] |
| 00 100 | DS:[SI] |
| 00 101 | DS:[DI] |
| 00 110 | DS:d16 |
| 00 111 | DS:[BX] |
| 01 000 | DS:[BX + SI + d8] |
| 01 001 | DS:[BX + DI + d8] |
| 01 010 | SS:[BP + SI + d8] |
| 01 011 | SS:[BP + DI + d8] |
| 01 100 | DS:[SI + d8] |
| 01 101 | DS:[DI + d8] |
| 01 110 | SS:[BP + d8] |
| 01 111 | DS:[BX + d8] |

| mod r/m | Effective Address |
|---|---|
| 10 000 | DS:[BX + SI + d16] |
| 10 001 | DS:[BX + DI + d16] |
| 10 010 | SS:[BP + SI + d16] |
| 10 011 | SS:[BP + DI + d16] |
| 10 100 | DS:[SI + d16] |
| 10 101 | DS:[DI + d16] |
| 10 110 | SS:[BP + d16] |
| 10 111 | DS:[BX + d16] |
| 11 000 | register—see below |
| 11 001 | register—see below |
| 11 010 | register—see below |
| 11 011 | register—see below |
| 11 100 | register—see below |
| 11 101 | register—see below |
| 11 110 | register—see below |
| 11 111 | register—see below |

| Register Specified by r/m During 16-Bit Data Operations | | |
|---|---|---|
| mod r/m | Function of w Field | |
| | (when w = 0) | (when w = 1) |
| 11 000 | AL | AX |
| 11 001 | CL | CX |
| 11 010 | DL | DX |
| 11 011 | BL | BX |
| 11 100 | AH | SP |
| 11 101 | CH | BP |
| 11 110 | DH | SI |
| 11 111 | BH | DI |

| Register Specified by r/m During 32-Bit Data Operations | | |
|---|---|---|
| mod r/m | Function of w Field | |
| | (when w = 0) | (when w = 1) |
| 11 000 | AL | EAX |
| 11 001 | CL | ECX |
| 11 010 | DL | EDX |
| 11 011 | BL | EBX |
| 11 100 | AH | ESP |
| 11 101 | CH | EBP |
| 11 110 | DH | ESI |
| 11 111 | BH | EDI |

**Encoding of 32-bit Address Mode with "mod r/m" byte (no "s-i-b" byte present):**

| mod r/m | Effective Address |
|---|---|
| 00 000 | DS:[EAX] |
| 00 001 | DS:[ECX] |
| 00 010 | DS:[EDX] |
| 00 011 | DS:[EBX] |
| 00 100 | s-i-b is present |
| 00 101 | DS:d32 |
| 00 110 | DS:[ESI] |
| 00 111 | DS:[EDI] |
| 01 000 | DS:[EAX + d8] |
| 01 001 | DS:[ECX + d8] |
| 01 010 | DS:[EDX + d8] |
| 01 011 | DS:[EBX + d8] |
| 01 100 | s-i-b is present |
| 01 101 | SS:[EBP + d8] |
| 01 110 | DS:[ESI + d8] |
| 01 111 | DS:[EDI + d8] |

| mod r/m | Effective Address |
|---|---|
| 10 000 | DS:[EAX + d32] |
| 10 001 | DS:[ECX + d32] |
| 10 010 | DS:[EDX + d32] |
| 10 011 | DS:[EBX + d32] |
| 10 100 | s-i-b is present |
| 10 101 | SS:[EBP + d32] |
| 10 110 | DS:[ESI + d32] |
| 10 111 | DS:[EDI + d32] |
| 11 000 | register—see below |
| 11 001 | register—see below |
| 11 010 | register—see below |
| 11 011 | register—see below |
| 11 100 | register—see below |
| 11 101 | register—see below |
| 11 110 | register—see below |
| 11 111 | register—see below |

**Register Specified by reg or r/m during 16-Bit Data Operations:**

| mod r/m | function of w field | |
|---|---|---|
| | (when w = 0) | (when w = 1) |
| 11 000 | AL | AX |
| 11 001 | CL | CX |
| 11 010 | DL | DX |
| 11 011 | BL | BX |
| 11 100 | AH | SP |
| 11 101 | CH | BP |
| 11 110 | DH | SI |
| 11 111 | BH | DI |

**Register Specified by reg or r/m during 32-Bit Data Operations:**

| mod r/m | function of w field | |
|---|---|---|
| | (when w = 0) | (when w = 1) |
| 11 000 | AL | EAX |
| 11 001 | CL | ECX |
| 11 010 | DL | EDX |
| 11 011 | BL | EBX |
| 11 100 | AH | ESP |
| 11 101 | CH | EBP |
| 11 110 | DH | ESI |
| 11 111 | BH | EDI |

**Encoding of 32-bit Address Mode ("mod r/m" byte and "s-i-b" byte present):**

| mod base | Effective Address |
|---|---|
| 00 000 | DS:[EAX + (scaled index)] |
| 00 001 | DS:[ECX + (scaled index)] |
| 00 010 | DS:[EDX + (scaled index)] |
| 00 011 | DS:[EBX + (scaled index)] |
| 00 100 | SS:[ESP + (scaled index)] |
| 00 101 | DS:[d32 + (scaled index)] |
| 00 110 | DS:[ESI + (scaled index)] |
| 00 111 | DS:[EDI + (scaled index)] |
| 01 000 | DS:[EAX + (scaled index) + d8] |
| 01 001 | DS:[ECX + (scaled index) + d8] |
| 01 010 | DS:[EDX + (scaled index) + d8] |
| 01 011 | DS:[EBX + (scaled index) + d8] |
| 01 100 | SS:[ESP + (scaled index) + d8] |
| 01 101 | SS:[EBP + (scaled index) + d8] |
| 01 110 | DS:[ESI + (scaled index) + d8] |
| 01 111 | DS:[EDI + (scaled index) + d8] |
| 10 000 | DS:[EAX + (scaled index) + d32] |
| 10 001 | DS:[ECX + (scaled index) + d32] |
| 10 010 | DS:[EDX + (scaled index) + d32] |
| 10 011 | DS:[EBX + (scaled index) + d32] |
| 10 100 | SS:[ESP + (scaled index) + d32] |
| 10 101 | SS:[EBP + (scaled index) + d32] |
| 10 110 | DS:[ESI + (scaled index) + d32] |
| 10 111 | DS:[EDI + (scaled index) + d32] |

**NOTE:**
Mod field in "mod r/m" byte; ss, index, base fields in "s-i-b" byte.

| ss | Scale Factor |
|---|---|
| 00 | x1 |
| 01 | x2 |
| 10 | x4 |
| 11 | x8 |

| index | Index Register |
|---|---|
| 000 | EAX |
| 001 | ECX |
| 010 | EDX |
| 011 | EBX |
| 100 | no index reg** |
| 101 | EBP |
| 110 | ESI |
| 111 | EDI |

****IMPORTANT NOTE:**
When index field is 100, indicating "no index register," then ss field MUST equal 00. If index is 100 and ss does not equal 00, the effective address is undefined.

#### 6.2.3.5 ENCODING OF OPERATION DIRECTION (d) FIELD

In many two-operand instructions the d field is present to indicate which operand is considered the source and which is the destination.

| d | Direction of Operation |
|---|---|
| 0 | Register/Memory <- - Register<br>"reg" Field Indicates Source Operand;<br>"mod r/m" or "mod ss index base" Indicates Destination Operand |
| 1 | Register <- - Register/Memory<br>"reg" Field Indicates Destination Operand;<br>"mod r/m" or "mod ss index base" Indicates Source Operand |

#### 6.2.3.6 ENCODING OF SIGN-EXTEND (s) FIELD

The s field occurs primarily to instructions with immediate data fields. The s field has an effect only if the size of the immediate data is 8 bits and is being placed in a 16-bit or 32-bit destination.

| s | Effect on Immediate Data8 | Effect on Immediate Data 16\|32 |
|---|---|---|
| 0 | None | None |
| 1 | Sign-Extend Data8 to Fill 16-Bit or 32-Bit Destination | None |

#### 6.2.3.7 ENCODING OF CONDITIONAL TEST (tttn) FIELD

For the conditional instructions (conditional jumps and set on condition), tttn is encoded with n indicating to use the condition (n = 0) or its negation (n = 1), and ttt giving the condition to test.

| Mnemonic | Condition | tttn |
|---|---|---|
| O | Overflow | 0000 |
| NO | No Overflow | 0001 |
| B/NAE | Below/Not Above or Equal | 0010 |
| NB/AE | Not Below/Above or Equal | 0011 |
| E/Z | Equal/Zero | 0100 |
| NE/NZ | Not Equal/Not Zero | 0101 |
| BE/NA | Below or Equal/Not Above | 0110 |
| NBE/A | Not Below or Equal/Above | 0111 |
| S | Sign | 1000 |
| NS | Not Sign | 1001 |
| P/PE | Parity/Parity Even | 1010 |
| NP/PO | Not Parity/Parity Odd | 1011 |
| L/NGE | Less Than/Not Greater or Equal | 1100 |
| NL/GE | Not Less Than/Greater or Equal | 1101 |
| LE/NG | Less Than or Equal/Greater Than | 1110 |
| NLE/G | Not Less or Equal/Greater Than | 1111 |

#### 6.2.3.8 ENCODING OF CONTROL OR DEBUG OR TEST REGISTER (eee) FIELD

For the loading and storing of the Control, Debug and Test registers.

**When Interpreted as Control Register Field**

| eee Code | Reg Name |
|---|---|
| 000 | CR0 |
| 010 | CR2 |
| 011 | CR3 |
| Do not use any other encoding | |

**When Interpreted as Debug Register Field**

| eee Code | Reg Name |
|---|---|
| 000 | DR0 |
| 001 | DR1 |
| 010 | DR2 |
| 011 | DR3 |
| 110 | DR6 |
| 111 | DR7 |
| Do not use any other encoding | |

**When Interpreted as Test Register Field**

| eee Code | Reg Name |
|---|---|
| 110 | TR6 |
| 111 | TR7 |
| Do not use any other encoding | |

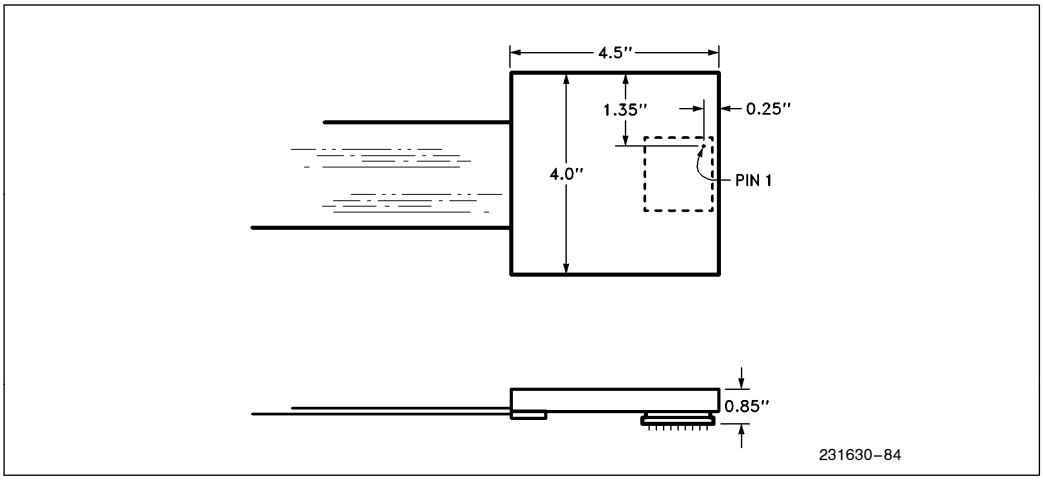


**Figure 7-1. Processor Module Dimensions**

## 7. DESIGNING FOR ICE™-Intel386 DX EMULATOR USE

The Intel386 DX in-circuit emulator products are ICE-Intel386 DX 25 MHz or 33 MHz (both referred to as ICE-Intel386 DX emulator). The ICE-Intel386 DX emulator probe module has several electrical and mechanical characteristics that should be taken into consideration when designing the hardware.

**Capacitive loading:** The ICE-Intel386 DX emulator adds up to 25 pF to each line.

**Drive requirement:** The ICE-Intel386 DX emulator adds one standard TTL load on the CLK2 line, up to one advanced low-power Schottky TTL load per control signal line, and one advanced low-power Schottky TTL load per address, byte enable, and data line. These loads are within the probe module and are driven by the probe's Intel386 DX component, which has standard drive and loading capability listed in the A.C. and D.C. Specification Tables in Sections 9.4 and 9.5.

**Power requirement:** For noise immunity the ICE-Intel386 DX emulator probe is powered by the user system. This high-speed probe circuitry draws up to 1.5A plus the maximum $I_{CC}$ from the user Intel386 DX component socket.

**Intel386 DX location and orientation:** The ICE-Intel386 DX processor module, target-adaptor cable (which does not exist for the ICE-Intel386 DX 33 MHz emulator), and the isolation board used for extra electrical buffering of the emulator initially, require clearance as illustrated in Figures 7-1 and 7-2.

**Interface Board and CLK2 speed reduction:** When the ICE-Intel386 DX emulator probe is first attached to an unverified user system, the interface board helps the ICE-Intel386 DX emulator function in user systems with bus faults (shorted signals, etc.). After electrical verification it may be removed. Only when the interface board is installed, the user system must have a reduced CLK2 frequency of 25 MHz maximum.

**Cache coherence:** The ICE-Intel386 DX emulator loads user memory by performing Intel386 DX component write cycles. Note that if the user system is not designed to update or invalidate its cache (if it has a cache) upon processor writes to memory, the cache could contain stale instruction code and/or data. For best use of the ICE-Intel386 DX emulator, the user should consider designing the cache (if any) to update itself automatically when processor writes occur, or find another method of maintaining cache data coherence with main user memory.

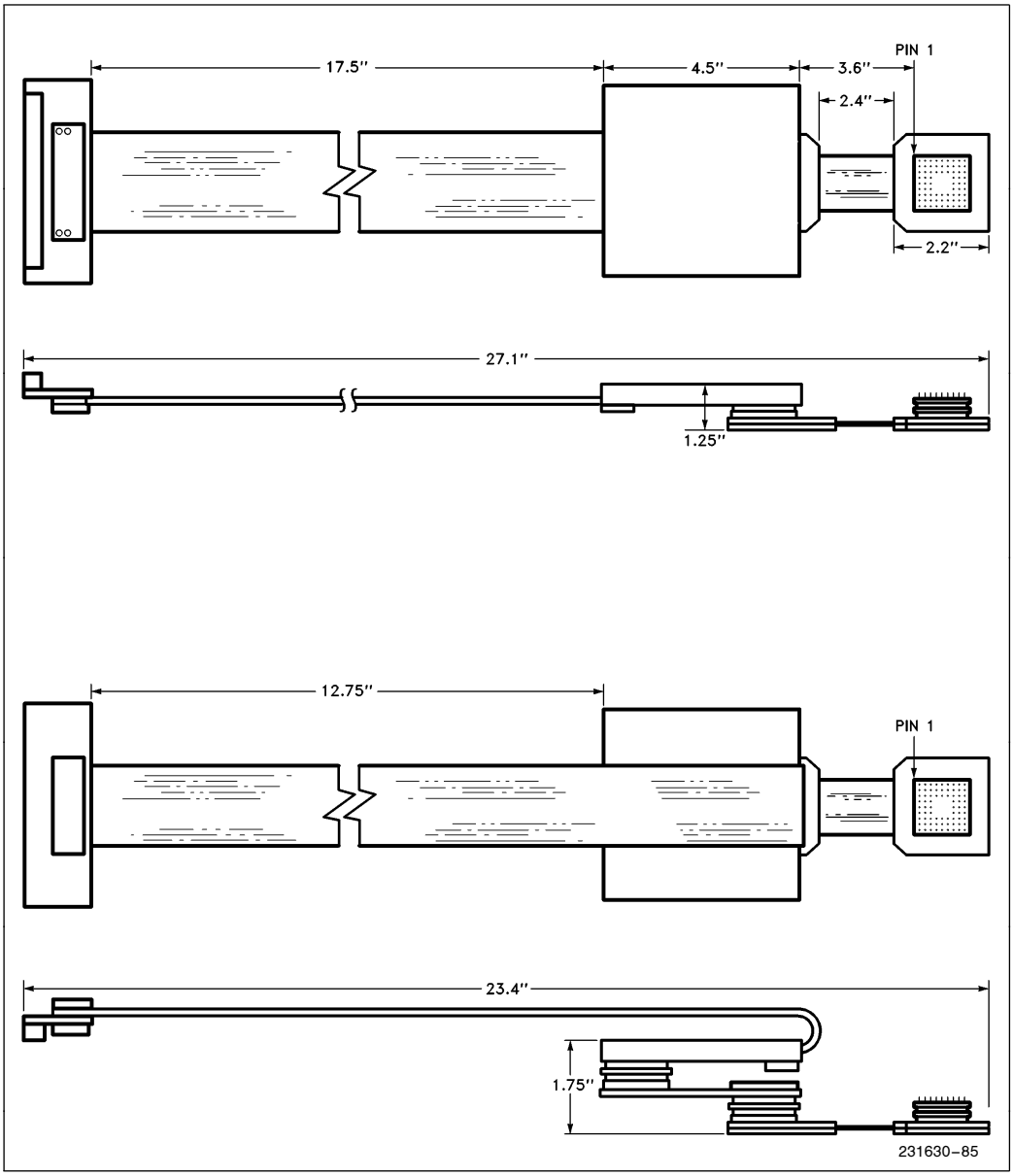


**Figure 7-2. Processor Module, Target-Adapter Cable, and Isolation Board Dimensions**

# 8. MECHANICAL DATA

## 8.1 INTRODUCTION

In this section, the physical packaging and its connections are described in detail.

## 8.2 PACKAGE DIMENSIONS AND MOUNTING

The initial Intel386 DX package is a 132-pin ceramic pin grid array (PGA). Pins of this package are arranged 0.100 inch (2.54mm) center-to-center, in a 14 x 14 matrix, three rows around.

A wide variety of available sockets allow low insertion force or zero insertion force mountings, and a choice of terminals such as soldertail, surface mount, or wire wrap. Several applicable sockets are listed in Table 8.1.

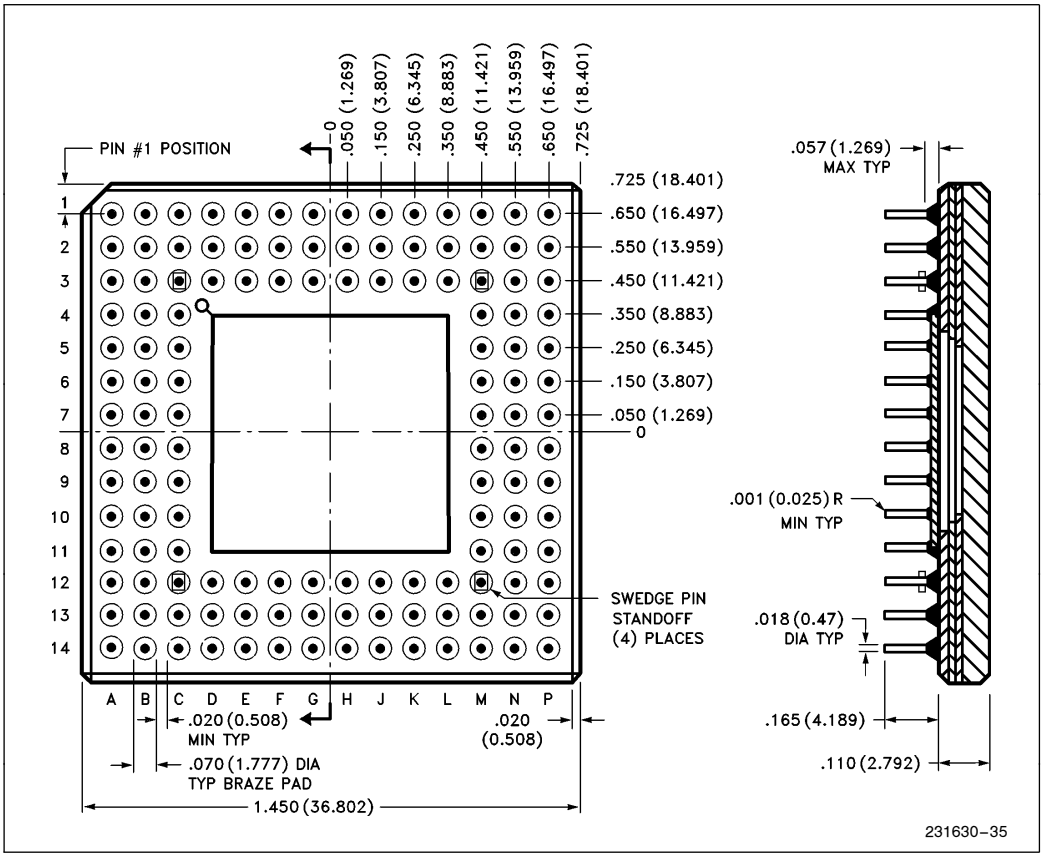


**Figure 8.1. 132-Pin Ceramic PGA Package Dimensions**

## Table 8.1. Several Socket Options for 132-Pin PGA

* Low insertion force (LIF) soldertail 55274-1
* Amp tests indicate 50% reduction in insertion force compared to machined sockets

Other socket options
* Zero insertion force (ZIF) soldertail 55583-1
* Zero insertion force (ZIF) Burn-in version 55573-2

**Amp Incorporated**
(Harrisburg, PA 17105 U.S.A.
Phone 717-564-0100)

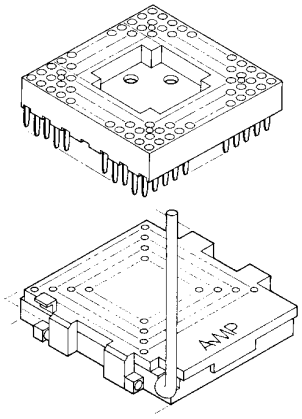


231630–45

Cam handle locks in low profile position when substrate is installed (handle UP for open and DOWN for closed positions)

courtesy Amp Incorporated

Peel-A-Way Mylar and Kapton Socket Terminal Carriers
* Low insertion force surface mount CS132-37TG
* Low insertion force soldertail CS132-01TG
* Low insertion force wire-wrap CS132-02TG (two level) CS132-03TG (three-level)
* Low insertion force press-fit CS132-05TG

**Advanced Interconnections**
(5 Division Street
Warwick, RI 02818 U.S.A.
Phone 401-885-0485)

Peel-A-Way Carrier No. 132:
Kapton Carrier is KS132
Mylar Carrier is MS132

Molded Plastic Body KS132 is shown below:

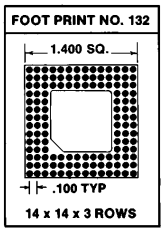


231630–46

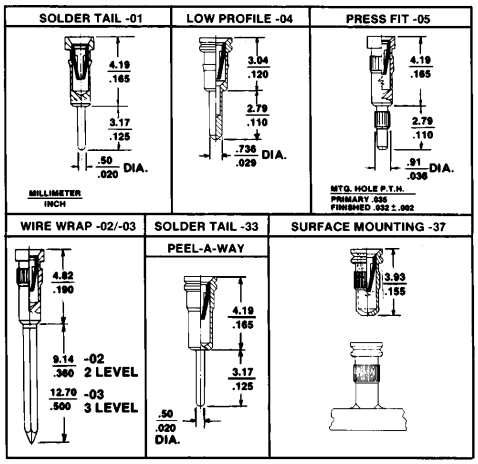


231630–47

courtesy Advanced Interconnections
(Peel-A-Way Terminal Carriers
U.S. Patent No. 4442938)

**Table 8.1. Several Socket Options for 132-Pin PGA** (Continued)

PIN GRID ARRAY DECOUPLING SOCKETS

* Low insertion force soldertail 0.125 length PGD-005-1A1 Finish: Term/Contact Tin-Lead/Gold
* Low insertion force soldertail 0.180 length PGD-005-1B1 Finish: Term/Contact: Tin-Lead/Gold
* Low insertion 3 level Wire/Wrap PGD-005-1C1 Finish: Term/Contact Tin-Lead/Gold

Includes 0.10 μF & 1.0 μF Decoupling Capacitors

VisinPak Kapton Carrier

PKC Series

Pin Grid Array

PGM (Plastic) or PPS (Glass Epoxy) Series

**AUGAT INC.**
33 Perry Ave., P.O. Box 779 Attleboro, MA 02703
TECHNICAL INFORMATION: (508) 222-2202
CUSTOMER SERVICE: (508) 699-9800

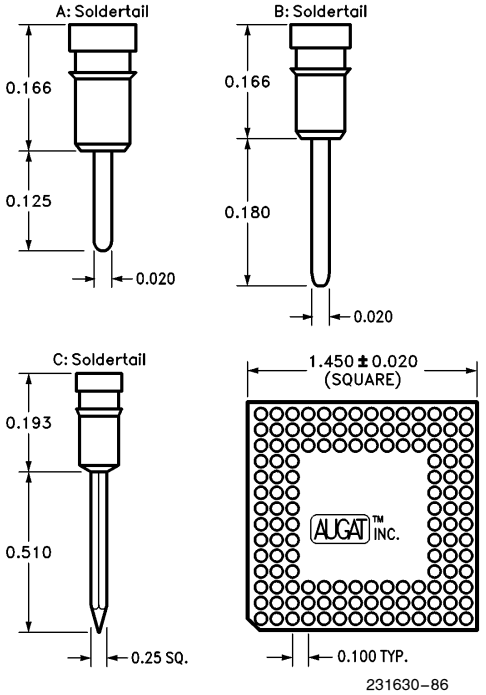


231630–86

* Low insertion force socket soldertail (for production use)
  2XX-6576-00-3308 (new style)
  2XX-6003-00-3302 (older style)
* Zero insertion force soldertail (for test and burn-in use)
  2XX-6568-00-3302

**Textool Products**
**Electronic Products Division/3M**
(1410 West Pioneer Drive
Irving, Texas 75601 U.S.A.
Phone 214-259-2676)

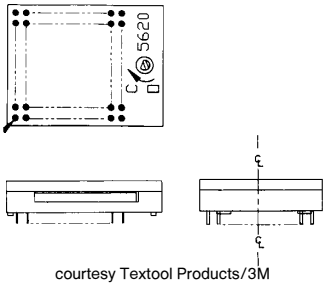


courtesy Textool Products/3M 231630–48

## 8.3 PACKAGE THERMAL SPECIFICATION

The Intel386 DX is specified for operation when case temperature is within the range of 0°C–85°C. The case temperature may be measured in any environment, to determine whether the Intel386 DX is within specified operating range.

The PGA case temperature should be measured at the center of the top surface opposite the pins, as in Figure 8.2.

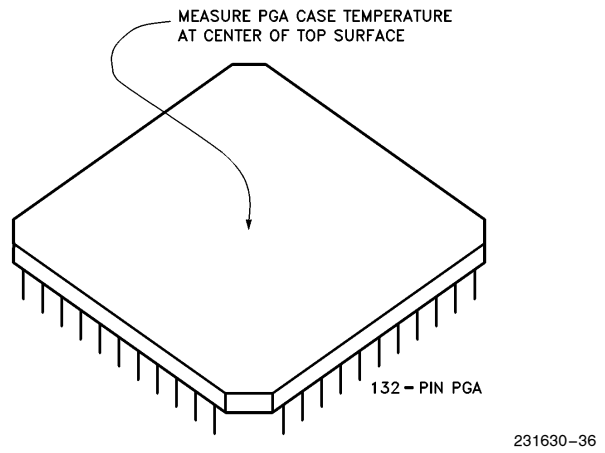


**Figure 8.2. Measuring Intel386™ DX PGA Case Temperature**

**Table 8.2. Intel386™ DX PGA Package Thermal Characteristics**

| Thermal Resistance — °C/Watt | | | | | | | |
|---|---|---|---|---|---|---|---|
| Parameter | Airflow — ft./min (m/sec) | | | | | | |
| | 0 (0) | 50 (0.25) | 100 (0.50) | 200 (1.01) | 400 (2.03) | 600 (3.04) | 800 (4.06) |
| $\theta$ Junction-to-Case (case measured as Fig. 8-2) | 2 | 2 | 2 | 2 | 2 | 2 | 2 |
| $\theta$ Case-to-Ambient (no heatsink) | 19 | 18 | 17 | 15 | 12 | 10 | 9 |
| $\theta$ Case-to-Ambient (with omnidirectional heatsink) | 16 | 15 | 14 | 12 | 9 | 7 | 6 |
| $\theta$ Case-to-Ambient (with unidirectional heatsink) | 15 | 14 | 13 | 11 | 8 | 6 | 5 |

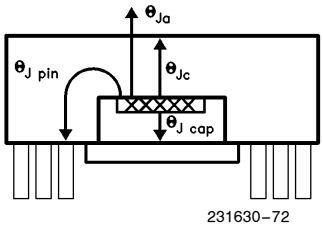


**NOTES:**
1. Table 8.2 applies to Intel386™ DX PGA plugged into socket or soldered directly into board.
2. $\theta_{JA} = \theta_{JC} + \theta_{CA}$.
3. $\theta_{J\text{-}CAP} = 4°C/w$ (approx.)
   $\theta_{J\text{-}PIN} = 4°C/w$ (inner pins) (approx.)
   $\theta_{J\text{-}PIN} = 8°C/w$ (outer pins) (approx.)
4. $T_A = T_C - P * \theta_{CA}$ (ambient temperature)

# 9. ELECTRICAL DATA

## 9.1 INTRODUCTION

The following sections describe recommended electrical connections for the Intel386 DX, and its electrical specifications.

## 9.2 POWER AND GROUNDING

### 9.2.1 Power Connections

The Intel386 DX is implemented in CHMOS III and CHMOS IV technology and has modest power requirements. However, its high clock frequency and 72 output buffers (address, data, control, and HLDA) can cause power surges as multiple output buffers drive new signal levels simultaneously. For clean on-chip power distribution at high frequency, 20 $V_{CC}$ and 21 $V_{SS}$ pins separately feed functional units of the Intel386 DX.

Power and ground connections must be made to all external $V_{CC}$ and GND pins of the Intel386 DX. On the circuit board, all $V_{CC}$ pins must be connected on a $V_{CC}$ plane. All $V_{SS}$ pins must be likewise connected on a GND plane.

### 9.2.2 Power Decoupling Recommendations

Liberal decoupling capacitance should be placed near the Intel386 DX. The Intel386 DX driving its 32-bit parallel address and data buses at high frequencies can cause transient power surges, particularly when driving large capacitive loads.

Low inductance capacitors and interconnects are recommended for best high frequency electrical performance. Inductance can be reduced by shortening circuit board traces between the Intel386 DX and decoupling capacitors as much as possible. Capacitors specifically for PGA packages are also commercially available, for the lowest possible inductance.

### 9.2.3 Resistor Recommendations

The ERROR# and BUSY# inputs have resistor pullups of approximately 20 KΩ built-in to the Intel386 DX to keep these signals negated when no Intel387 DX coprocessor is present in the system (or temporarily removed from its socket). The BS16# input also has an internal pullup resistor of approximately 20 KΩ, and the PEREQ input has an internal pulldown resistor of approximately 20 KΩ.

In typical designs, the external pullup resistors shown in Table 9-1 are recommended. However, a particular design may have reason to adjust the resistor values recommended here, or alter the use of pullup resistors in other ways.

### 9.2.4 Other Connection Recommendations

For reliable operation, always connect unused inputs to an appropriate signal level. N.C. pins should always remain unconnected.

Particularly when not using interrupts or bus hold, (as when first prototyping, perhaps) prevent any chance of spurious activity by connecting these associated inputs to GND:

| Pin | Signal |
|---|---|
| B7 | INTR |
| B8 | NMI |
| D14 | HOLD |

If not using address pipelining, pullup D13 NA# to $V_{CC}$.

If not using 16-bit bus size, pullup C14 BS16# to $V_{CC}$.

Pullups in the range of 20 KΩ are recommended.

**Table 9-1. Recommended Resistor Pullups to $V_{CC}$**

| Pin and Signal | Pullup Value | Purpose |
|---|---|---|
| E14 ADS# | 20 KΩ ±10% | Lightly Pull ADS# Negated During Intel386 DX Hold Acknowledge States |
| C10 LOCK# | 20 KΩ ±10% | Lightly Pull LOCK# Negated During Intel386 DX Hold Acknowledge States |

## 9.3 MAXIMUM RATINGS

**Table 9-2. Maximum Ratings**

| Parameter | Intel386™ DX 20, 25, 33 MHz Maximum Rating |
|---|---|
| Storage Temperature | −65°C to +150°C |
| Case Temperature Under Bias | −65°C to +110°C |
| Supply Voltage with Respect to $V_{SS}$ | −0.5V to +6.5V |
| Voltage on Other Pins | −0.5V to $V_{CC}$ + 0.5V |

Table 9-2 is a stress rating only, and functional operation at the maximums is not guaranteed. Functional operating conditions are given in **9.4 D.C. Specifications** and **9.5 A.C. Specifications**.

Extended exposure to the Maximum Ratings may affect device reliability. Furthermore, although the Intel386 DX contains protective circuitry to resist damage from static electric discharge, always take precautions to avoid high static voltages or electric fields.

## 9.4 D.C. SPECIFICATIONS

Functional Operating Range: $V_{CC}$ = 5V ±5%; $T_{CASE}$ = 0°C to 85°C

**Table 9-3. Intel386™ DX D.C. Characteristics**

| Symbol | Parameter | Intel386™ DX 20 MHz, 25 MHz, 33 MHz | | Unit | Test Conditions |
|---|---|---|---|---|---|
| | | Min | Max | | |
| $V_{IL}$ | Input Low Voltage | −0.3 | 0.8 | V | (Note 1) |
| $V_{IH}$ | Input High Voltage | 2.0 | $V_{CC}$ + 0.3 | V | |
| $V_{ILC}$ | CLK2 Input Low Voltage | −0.3 | 0.8 | V | (Note 1) |
| $V_{IHC}$ | CLK2 Input High Voltage<br>20 MHz<br>25 MHz and 33 MHz | <br>$V_{CC}$ − 0.8<br>3.7 | <br>$V_{CC}$ + 0.3<br>$V_{CC}$ + 0.3 | <br>V<br>V | |
| $V_{OL}$ | Output Low Voltage<br>$I_{OL}$ = 4 mA: A2–A31, D0–D31<br>$I_{OL}$ = 5 mA: BE0#–BE3#, W/R#, D/C#, M/IO#, LOCK#, ADS#, HLDA | | <br>0.45<br>0.45 | <br>V<br>V | |
| $V_{OH}$ | Output High Voltage<br>$I_{OH}$ = 1 mA: A2–A31, D0–D31<br>$I_{OH}$ = 0.9 mA: BE0#–BE3#, W/R#, D/C#, M/IO#, LOCK#, ADS#, HLDA | <br>2.4<br>2.4 | | <br>V<br>V | |
| $I_{LI}$ | Input Leakage Current (For All Pins except BS16#, PEREQ, BUSY#, and ERROR#) | | ±15 | μA | 0V ≤ $V_{IN}$ ≤ $V_{CC}$ |
| $I_{IH}$ | Input Leakage Current (PEREQ Pin) | | 200 | μA | $V_{IH}$ = 2.4V (Note 2) |
| $I_{IL}$ | Input Leakage Current (BS16#, BUSY#, and ERROR# Pins) | | −400 | μA | $V_{IL}$ = 0.45 (Note 3) |
| $I_{LO}$ | Output Leakage Current | | ±15 | μA | 0.45V ≤ $V_{OUT}$ ≤ $V_{CC}$ |
| $I_{CC}$ | Supply Current<br>CLK2 = 40 MHz: with 20 MHz Intel386™ DX<br>CLK2 = 50 MHz: with 25 MHz Intel386™ DX<br>CLK2 = 66 MHz: with 33 MHz Intel386™ DX | | <br>260<br>320<br>390 | <br>mA<br>mA<br>mA | (Note 4)<br>$I_{CC}$ Typ. = 200 mA<br>$I_{CC}$ Typ. = 240 mA<br>$I_{CC}$ Typ. = 300 mA |
| $C_{IN}$ | Input or I/O Capacitance | | 10 | pF | $F_C$ = 1 MHz |
| $C_{OUT}$ | Output Capacitance | | 12 | pF | $F_C$ = 1 MHz |
| $C_{CLK}$ | CLK2 Capacitance | | 20 | pF | $F_C$ = 1 MHz |

**NOTES:**
1. The min value, −0.3, is not 100% tested.
2. PEREQ input has an internal pulldown resistor.
3. BS16#, BUSY# and ERROR# inputs each have an internal pullup resistor.
4. CHMOS IV Technology (CHMOS III Max $I_{CC}$ at 20 MHz, 25 MHz = 500 mA, 550 mA).

## 9.5 A.C. SPECIFICATIONS

### 9.5.1 A.C. Spec Definitions

The A.C. specifications, given in Tables 9-4, 9-5, and 9-6, consist of output delays, input setup requirements and input hold requirements. All A.C. specifications are relative to the CLK2 rising edge crossing the 2.0V level.

A.C. spec measurement is defined by Figure 9-1. Inputs must be driven to the voltage levels indicated by Figure 9-1 when A.C. specifications are measured. Intel386 DX output delays are specified with minimum and maximum limits, measured as shown. The minimum Intel386 DX delay times are hold times provided to external circuitry. Intel386 DX input setup and hold times are specified as minimums, defining the smallest acceptable sampling window. Within the sampling window, a synchronous input signal must be stable for correct Intel386 DX operation.

Outputs NA#, W/R#, D/C#, M/IO#, LOCK#, BE0#–BE3#, A2–A31 and HLDA only change at the beginning of phase one. D0–D31 (write cycles) only change at the beginning of phase two. The READY#, HOLD, BUSY#, ERROR#, PEREQ and D0–D31 (read cycles) inputs are sampled at the beginning of phase one. The NA#, BS16#, INTR and NMI inputs are sampled at the beginning of phase two.

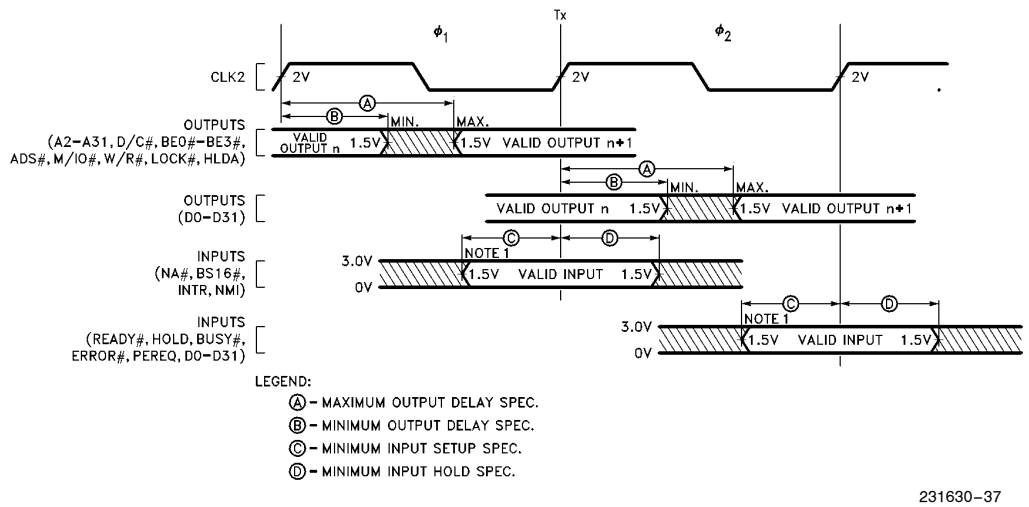


**NOTES:**
1. Input waveforms have tr ≤ 2.0 ns from 0.8V to 2.0V.
2. See section 9.5.8 for typical output rise time versus load capacitance.

**Figure 9-1. Drive Levels and Measurement Points for A.C. Specifications**

### 9.5.2 A.C. Specification Tables

Functional Operating Range: $V_{CC}$ = 5V ±5%; $T_{CASE}$ = 0°C to +85°C

**Table 9-4. 33 MHz Intel386™ DX A.C. Characteristics**

| Symbol | Parameter | 33 MHz Intel386™ DX | | Unit | Ref. Fig. | Notes |
|---|---|---|---|---|---|---|
| | | Min | Max | | | |
| | Operating Frequency | 8 | 33.3 | MHz | | Half of CLK2 Frequency |
| t1 | CLK2 Period | 15.0 | 62.5 | ns | 9-3 | |
| t2a | CLK2 High Time | 6.25 | | ns | 9-3 | at 2V |
| t2b | CLK2 High Time | 4.5 | | ns | 9-3 | at 3.7V |
| t3a | CLK2 Low Time | 6.25 | | ns | 9-3 | at 2V |
| t3b | CLK2 Low Time | 4.5 | | ns | 9-3 | at 0.8V |
| t4 | CLK2 Fall Time | | 4 | ns | 9-3 | 3.7V to 0.8V (Note 3) |
| t5 | CLK2 Rise Time | | 4 | ns | 9-3 | 0.8V to 3.7V (Note 3) |
| t6 | A2–A31 Valid Delay | 4 | 15 | ns | 9-5 | $C_L$ = 50 pF |
| t7 | A2–A31 Float Delay | 4 | 20 | ns | 9-6 | (Note 1) |
| t8 | BE0#–BE3#, LOCK# Valid Delay | 4 | 15 | ns | 9-5 | $C_L$ = 50 pF |
| t9 | BE0#–BE3#, LOCK# Float Delay | 4 | 20 | ns | 9-6 | (Note 1) |
| t10 | W/R#, M/IO#, D/C#, Valid Delay | 4 | 15 | ns | 9-5 | $C_L$ = 50 pF |
| t10a | ADS# Valid Delay | 4 | 14.5 | ns | 9-5 | $C_L$ = 50 pF |
| t11 | W/R#, M/IO#, D/C#, ADS# Float Delay | 4 | 20 | ns | 9-6 | (Note 1) |
| t12 | D0–D31 Write Data Valid Delay | 7 | 24 | ns | 9-5a | $C_L$ = 50 pF, (Note 4) |
| t12a | D0–D31 Write Data Hold Time | 2 | | | 9-5b | $C_L$ = 50 pF |
| t13 | D0–D31 Float Delay | 4 | 17 | ns | 9-6 | (Note 1) |
| t14 | HLDA Valid Delay | 4 | 20 | ns | 9-6 | $C_L$ = 50 pF |
| t15 | NA# Setup Time | 5 | | ns | 9-4 | |
| t16 | NA# Hold Time | 2 | | ns | 9-4 | |
| t17 | BS16# Setup Time | 5 | | ns | 9-4 | |
| t18 | BS16# Hold Time | 2 | | ns | 9-4 | |
| t19 | READY# Setup Time | 7 | | ns | 9-4 | |
| t20 | READY# Hold Time | 4 | | ns | 9-4 | |

## 9.5.2 A.C. Specification Tables (Continued)

Functional Operating Range: $V_{CC}$ = 5V ±5%; $T_{CASE}$ = 0°C to +85°C

**Table 9-4. 33 MHz Intel386™ DX A.C. Characteristics** (Continued)

| Symbol | Parameter | 33 MHz Intel386™ DX | | Unit | Ref. Fig. | Notes |
|---|---|---|---|---|---|---|
| | | Min | Max | | | |
| t21 | D0–D31 Read Setup Time | 5 | | ns | 9-4 | |
| t22 | D0–D31 Read Hold Time | 3 | | ns | 9-4 | |
| t23 | HOLD Setup Time | 11 | | ns | 9-4 | |
| t24 | HOLD Hold Time | 2 | | ns | 9-4 | |
| t25 | RESET Setup Time | 5 | | ns | 9-7 | |
| t26 | RESET Hold Time | 2 | | ns | 9-7 | |
| t27 | NMI, INTR Setup Time | 5 | | ns | 9-4 | (Note 2) |
| t28 | NMI, INTR Hold Time | 5 | | ns | 9-4 | (Note 2) |
| t29 | PEREQ, ERROR#, BUSY# Setup Time | 5 | | ns | 9-4 | (Note 2) |
| t30 | PEREQ, ERROR#, BUSY# Hold Time | 4 | | ns | 9-4 | (Note 2) |

**NOTES:**

1. Float condition occurs when maximum output current becomes less than $I_{LO}$ in magnitude. Float delay is not 100% tested.
2. These inputs are allowed to be asynchronous to CLK2. The setup and hold specifications are given for testing purposes, to assure recognition within a specific CLK2 period.
3. Rise and fall times are not tested.
4. Min. time not 100% tested.

### 9.5.2 A.C. Specification Tables (Continued)

Functional Operating Range: $V_{CC}$ = 5V ±5%; $T_{CASE}$ = 0°C to +85°C

**Table 9-5. 25 MHz Intel386™ DX A.C. Characteristics**

| Symbol | Parameter | 25 MHz Intel386™ DX | | Unit | Ref. Fig. | Notes |
|---|---|---|---|---|---|---|
| | | Min | Max | | | |
| | Operating Frequency | 4 | 25 | MHz | | Half of CLK2 Frequency |
| t1 | CLK2 Period | 20 | 125 | ns | 9-3 | |
| t2a | CLK2 High Time | 7 | | ns | 9-3 | at 2V |
| t2b | CLK2 High Time | 4 | | ns | 9-3 | at 3.7V |
| t3a | CLK2 Low Time | 7 | | ns | 9-3 | at 2V |
| t3b | CLK2 Low Time | 5 | | ns | 9-3 | at 0.8V |
| t4 | CLK2 Fall Time | | 7 | ns | 9-3 | 3.7V to 0.8V |
| t5 | CLK2 Rise Time | | 7 | ns | 9-3 | 0.8V to 3.7V |
| t6 | A2–A31 Valid Delay | 4 | 21 | ns | 9-5 | $C_L$ = 50 pF |
| t7 | A2–A31 Float Delay | 4 | 30 | ns | 9-6 | (Note 1) |
| t8 | BE0#–BE3# Valid Delay | 4 | 24 | ns | 9-5 | $C_L$ = 50 pF |
| t8a | LOCK# Valid Delay | 4 | 21 | ns | 9-5 | $C_L$ = 50 pF |
| t9 | BE0#–BE3#, LOCK# Float Delay | 4 | 30 | ns | 9-6 | (Note 1) |
| t10 | W/R#, M/IO#, D/C#, ADS# Valid Delay | 4 | 21 | ns | 9-5 | $C_L$ = 50 pF |
| t11 | W/R#, M/IO#, D/C#, ADS# Float Delay | 4 | 30 | ns | 9-6 | (Note 1) |
| t12 | D0–D31 Write Data Valid Delay | 7 | 27 | ns | 9-5a | $C_L$ = 50 pF |
| t12a | D0–D31 Write Data Hold Time | 2 | | | 9-5b | $C_L$ = 50 pF |
| t13 | D0–D31 Float Delay | 4 | 22 | ns | 9-6 | (Note 1) |
| t14 | HLDA Valid Delay | 4 | 22 | ns | 9-6 | $C_L$ = 50 pF |
| t15 | NA# Setup Time | 7 | | ns | 9-4 | |
| t16 | NA# Hold Time | 3 | | ns | 9-4 | |
| t17 | BS16# Setup Time | 7 | | ns | 9-4 | |
| t18 | BS16# Hold Time | 3 | | ns | 9-4 | |
| t19 | READY# Setup Time | 9 | | ns | 9-4 | |
| t20 | READY# Hold Time | 4 | | ns | 9-4 | |

## 9.5.2 A.C. Specification Tables (Continued)

Functional Operating Range: $V_{CC}$ = 5V ±5%; $T_{CASE}$ = 0°C to +85°C

**Table 9-5. 25 MHz Intel386™ DX A.C. Characteristics** (Continued)

| Symbol | Parameter | 25 MHz Intel386™ DX | | Unit | Ref. Fig. | Notes |
|---|---|---|---|---|---|---|
| | | Min | Max | | | |
| t21 | D0–D31 Read Setup Time | 7 | | ns | 9-4 | |
| t22 | D0–D31 Read Hold Time | 5 | | ns | 9-4 | |
| t23 | HOLD Setup Time | 15 | | ns | 9-4 | |
| t24 | HOLD Hold Time | 3 | | ns | 9-4 | |
| t25 | RESET Setup Time | 10 | | ns | 9-7 | |
| t26 | RESET Hold Time | 3 | | ns | 9-7 | |
| t27 | NMI, INTR Setup Time | 6 | | ns | 9-4 | (Note 2) |
| t28 | NMI, INTR Hold Time | 6 | | ns | 9-4 | (Note 2) |
| t29 | PEREQ, ERROR#, BUSY# Setup Time | 6 | | ns | 9-4 | (Note 2) |
| t30 | PEREQ, ERROR#, BUSY# Hold Time | 5 | | ns | 9-4 | (Notes 2, 3) |

**NOTES:**

1. Float condition occurs when maximum output current becomes less than $I_{LO}$ in magnitude. Float delay is not 100% tested.
2. These inputs are allowed to be asynchronous to CLK2. The setup and hold specifications are given for testing purposes, to assure recognition within a specific CLK2 period.
3.

| | Symbol | Parameter | Min |
|---|---|---|---|
| $T_C$ = 0°C | t30 | PEREQ, ERROR#, BUSY# Hold Time | 4 |
| $T_C$ = +85°C | t30 | PEREQ, ERROR#, BUSY# Hold Time | 5 |

## 9.5.2 A.C. Specification Tables (Continued)

Functional Operating Range: $V_{CC}$ = 5V ±5%; $T_{CASE}$ = 0°C to +85°C

**Table 9.6. 20 MHz Intel386™ DX A.C. Characteristics**

| Symbol | Parameter | 20 MHz Intel386™ DX | | Unit | Ref. Fig. | Notes |
|---|---|---|---|---|---|---|
| | | Min | Max | | | |
| | Operating Frequency | 4 | 20 | MHz | | Half of CLK2 Frequency |
| $t_1$ | CLK2 Period | 25 | 125 | ns | 9-3 | |
| $t_{2a}$ | CLK2 High Time | 8 | | ns | 9-3 | at 2V |
| $t_{2b}$ | CLK2 High Time | 5 | | ns | 9-3 | at ($V_{CC}$ − 0.8V) |
| $t_{3a}$ | CLK2 Low Time | 8 | | ns | 9-3 | at 2V |
| $t_{3b}$ | CLK2 Low Time | 6 | | ns | 9-3 | at 0.8V |
| $t_4$ | CLK2 Fall Time | | 8 | ns | 9-3 | ($V_{CC}$ − 0.8V) to 0.8V |
| $t_5$ | CLK2 Rise Time | | 8 | ns | 9-3 | 0.8V to ($V_{CC}$ − 0.8V) |
| $t_6$ | A2–A31 Valid Delay | 4 | 30 | ns | 9-5 | $C_L$ = 120 pF |
| $t_7$ | A2–A31 Float Delay | 4 | 32 | ns | 9-6 | (Note 1) |
| $t_8$ | BE0#–BE3#, LOCK# Valid Delay | 4 | 30 | ns | 9-5 | $C_L$ = 75 pF |
| $t_9$ | BE0#–BE3#, LOCK# Float Delay | 4 | 32 | ns | 9-6 | (Note 1) |
| $t_{10}$ | W/R#, M/IO#, D/C#, ADS# Valid Delay | 6 | 28 | ns | 9-5 | $C_L$ = 75 pF |
| $t_{11}$ | W/R#, M/IO#, D/C#, ADS# Float Delay | 6 | 30 | ns | 9-6 | (Note 1) |
| $t_{12}$ | D0–D31 Write Data Valid Delay | 4 | 38 | ns | 9-5c | $C_L$ = 120 pF |
| $t_{13}$ | D0–D31 Float Delay | 4 | 27 | ns | 9-6 | (Note 1) |
| $t_{14}$ | HLDA Valid Delay | 6 | 28 | ns | 9-6 | $C_L$ = 75 pF |
| $t_{15}$ | NA# Setup Time | 9 | | ns | 9-4 | |
| $t_{16}$ | NA# Hold Time | 14 | | ns | 9-4 | |
| $t_{17}$ | BS16# Setup Time | 13 | | ns | 9-4 | |
| $t_{18}$ | BS16# Hold Time | 21 | | ns | 9-4 | |
| $t_{19}$ | READY# Setup Time | 12 | | ns | 9-4 | |
| $t_{20}$ | READY# Hold Time | 4 | | ns | 9-4 | |
| $t_{21}$ | D0–D31 Read Setup Time | 11 | | ns | 9-4 | |
| $t_{22}$ | D0–D31 Read Hold Time | 6 | | ns | 9-4 | |
| $t_{23}$ | HOLD Setup Time | 17 | | ns | 9-4 | |
| $t_{24}$ | HOLD Hold Time | 5 | | ns | 9-4 | |
| $t_{25}$ | RESET Setup Time | 12 | | ns | 9-7 | |

## 9.5.2 A.C. Specification Tables (Continued)

Functional Operating Range: $V_{CC}$ = 5V ±5%; $T_{CASE}$ = 0°C to +85°C

**Table 9-6. 20 MHz Intel386™ DX A.C. Characteristics** (Continued)

| Symbol | Parameter | 20 MHz Intel386™ DX | | Unit | Ref. Fig. | Notes |
|---|---|---|---|---|---|---|
| | | Min | Max | | | |
| $t_{26}$ | RESET Hold Time | 4 | | ns | 9-7 | |
| $t_{27}$ | NMI, INTR Setup Time | 16 | | ns | 9-4 | (Note 2) |
| $t_{28}$ | NMI, INTR Hold Time | 16 | | ns | 9-4 | (Note 2) |
| $t_{29}$ | PEREQ, ERROR#, BUSY# Setup Time | 14 | | ns | 9-4 | (Note 2) |
| $t_{30}$ | PEREQ, ERROR#, BUSY# Hold Time | 5 | | ns | 9-4 | (Note 2) |

**NOTES:**
1. Float condition occurs when maximum output current becomes less than $I_{LO}$ in magnitude. Float delay is not 100% tested.
2. These inputs are allowed to be asynchronous to CLK2. The setup and hold specifications are given for testing purposes, to assure recognition within a specific CLK2 period.

### 9.5.3 A.C. Test Loads

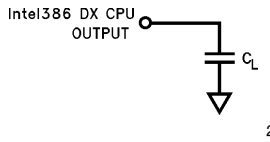


$C_L$ = 120 pF on A2–A31, D0–D31
$C_L$ = 75 pF on BE0#–BE3#, W/R#, M/IO#, D/C#, ADS#, LOCK#, HLDA
$C_L$ includes all parasitic capacitances.

**Figure 9-2. A.C. Test Load**

### 9.5.4 A.C. Timing Waveforms

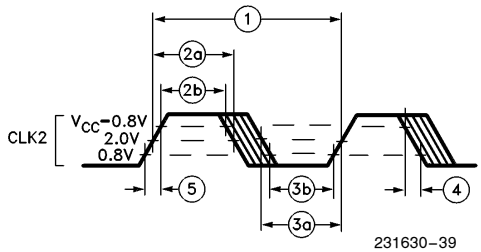


**Figure 9-3. CLK2 Timing**

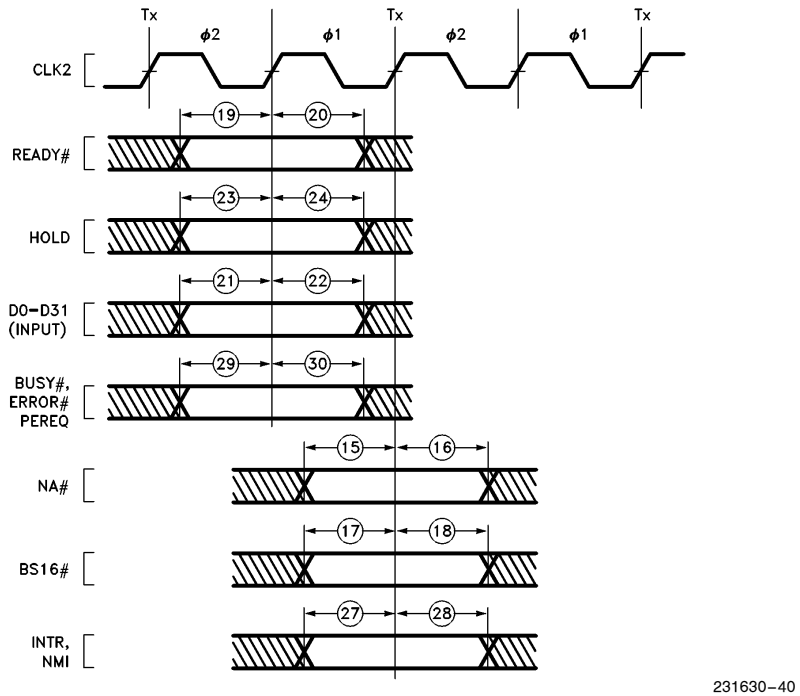


**Figure 9-4. Input Setup and Hold Timing**

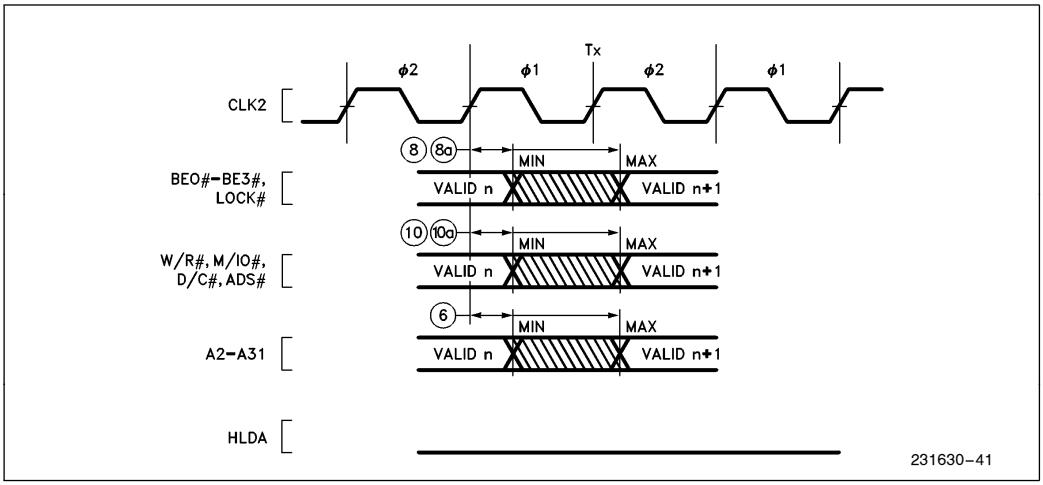


**Figure 9-5. Output Valid Delay Timing**

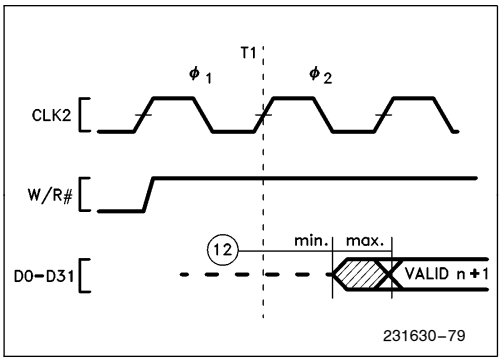


**Figure 9-5a. Write Data Valid Delay Timing (25 MHz, 33 MHz)**

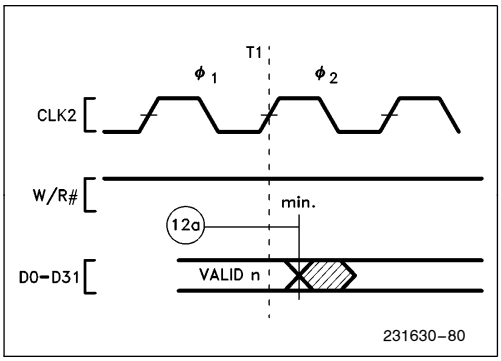


**Figure 9-5b. Write Data Hold Timing (25 MHz, 33 MHz)**

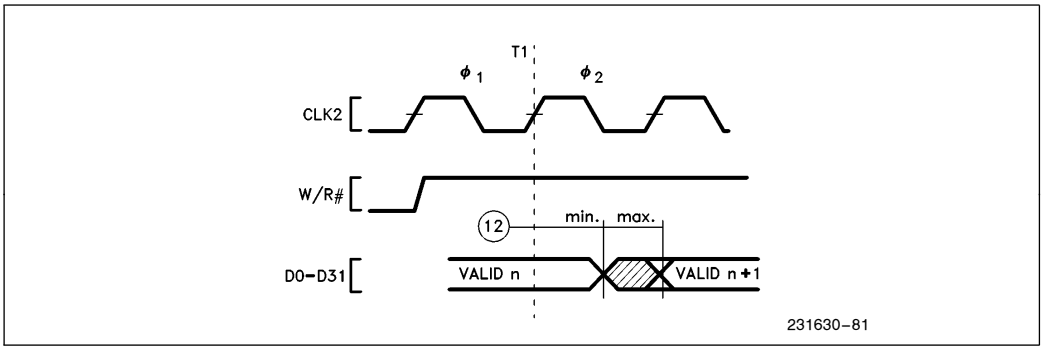


**Figure 9-5c. Write Data Valid Delay Timing (20 MHz)**

### 9.5.5 Typical Output Valid Delay Versus Load Capacitance at Maximum Operating Temperature ($C_L$ = 120 pF)

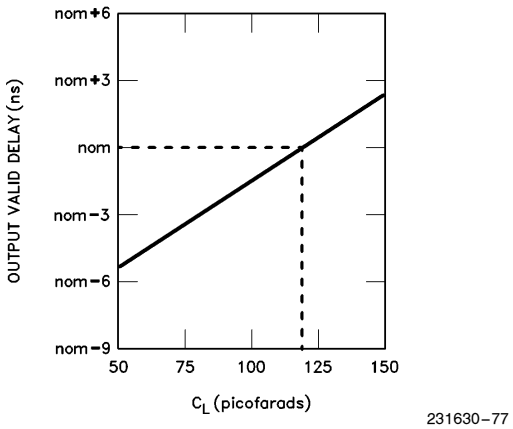


**NOTE:**
This graph will not be linear outside of the $C_L$ range shown.

### 9.5.6 Typical Output Valid Delay Versus Load Capacitance at Maximum Operating Temperature ($C_L$ = 75 pF)

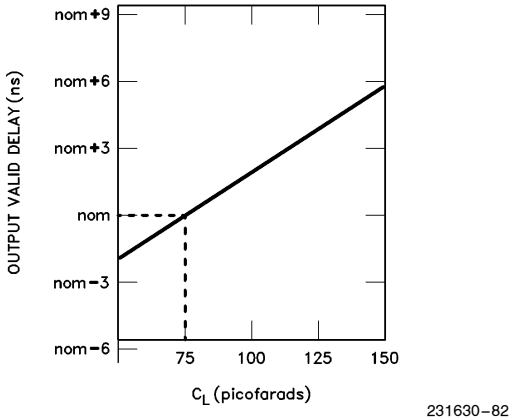


**NOTE:**
This graph will not be linear outside of the $C_L$ range shown.

### 9.5.7 Typical Output Valid Delay Versus Load Capacitance at Maximum Operating Temperature ($C_L$ = 50 pF)

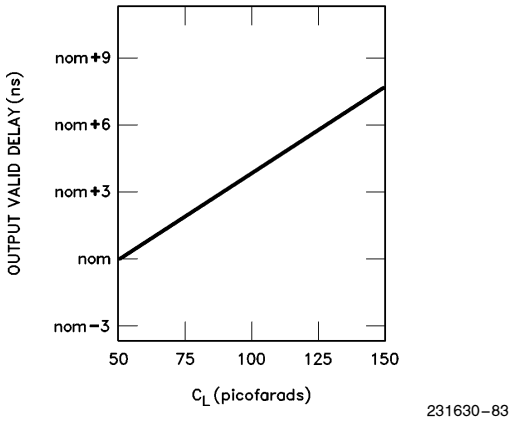


**NOTE:**
This graph will not be linear outside of the $C_L$ range shown.

### 9.5.8 Typical Output Rise Time Versus Load Capacitance at Maximum Operating Temperature

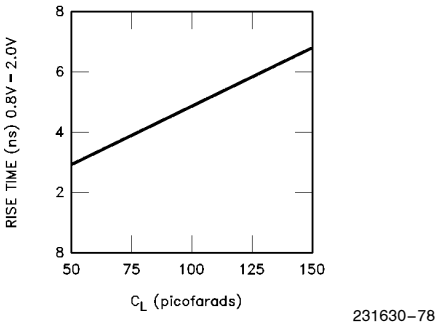


**NOTE:**
This graph will not be linear outside of the $C_L$ range shown.

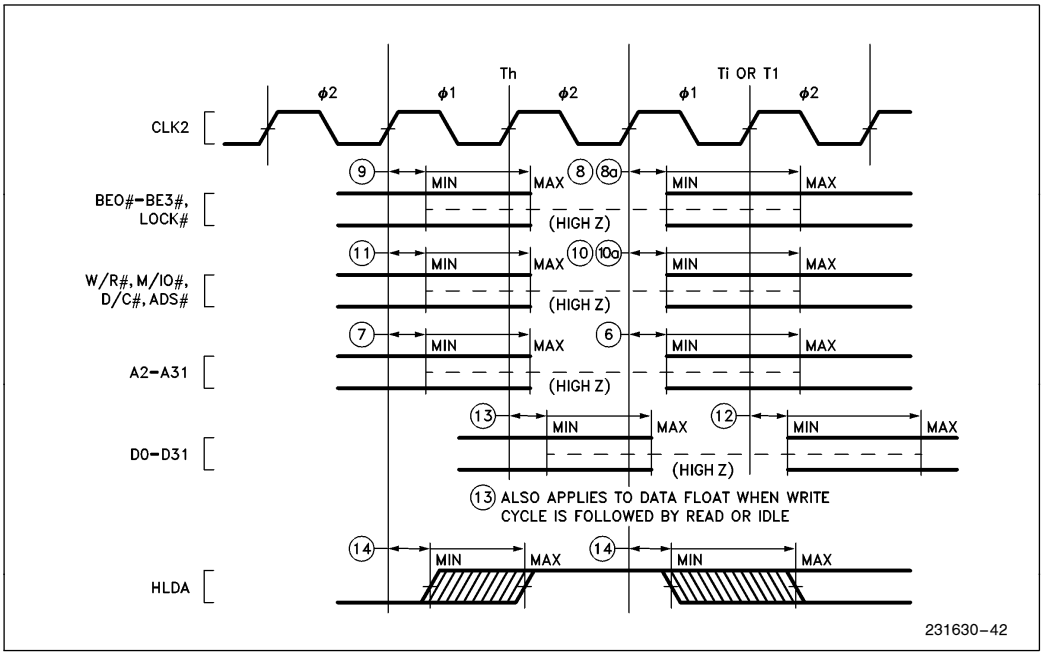


**Figure 9-6. Output Float Delay and HLDA Valid Delay Timing**

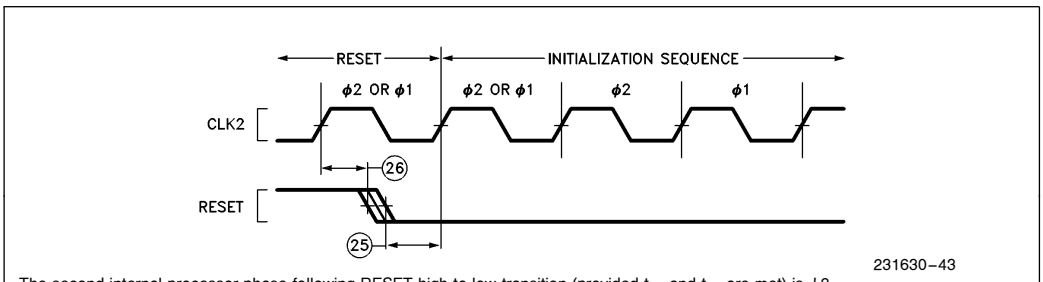


The second internal processor phase following RESET high-to-low transition (provided $t_{25}$ and $t_{26}$ are met) is $\phi 2$.

**Figure 9-7. RESET Setup and Hold Timing, and Internal Phase**

## 10. REVISION HISTORY

This Intel386 DX data sheet, version -005, contains updates and improvements to previous versions. A revision summary is listed here for your convenience.

**The sections significantly revised since version -001 are:**

| | |
|---|---|
| 2.9.6 | Sequence of exception checking table added. |
| 2.9.7 | Instruction restart revised. |
| 2.11.2 | TLB testing revised. |
| 2.12 | Debugging support revised. |
| 3.1 | LOCK prefix restricted to certain instructions. |
| 4.4.3.3 | I/O privilege level and I/O permission bitmap added. |
| Figures 4-15a, 4-15b | I/O permission bitmap added. |
| 4.6.4 | Protection and I/O permission bitmap revised. |
| 4.6.6 | Entering and leaving virtual 8086 mode through task switches, trap and interrupt gates, and IRET explained. |
| 5.6 | Self-test signature stored in EAX. |
| 5.8 | Coprocessor interface description added. |
| 5.8.1 | Software testing for coprocessor presence added. |
| Table 6-3 | PGA package thermal characteristics added. |
| 7. | Designing for ICE-Intel386 revised. |
| Figures 7-8, 7-9, 7-10 | ICE-Intel386 clearance requirements added. |
| 6.2.3.4 | Encoding of 32-bit address mode with no ‘‘sib’’ byte corrected. |

**The sections significantly revised since version -002 are:**

| | |
|---|---|
| Table 2-5 | Interrupt vector assignments updated. |
| Figure 4-15a | Bit__map__offset must be less than or equal to DFFFH. |
| Figure 5-28 | Intel386 DX outputs remain in their reset state during self-test. |
| 5.7 | Component and revision identifier history updated. |
| 9.4 | 20 MHz D.C. specifications added. |
| 9.5 | 16 MHz A.C. specifications updated. 20 MHz A.C. specifications added. |
| Table 6-1 | Clock counts updated. |

**The sections significantly revised since version -003 are:**

| | |
|---|---|
| Table 2-6b | Interrupt priorities 2 and 3 interchanged. |
| 2.9.8 | Double page faults do not raise double fault exception. |
| Figure 4-5 | Maximum-sized segments must have segments $Base_{11..0} = 0$. |
| 5.4.3.4 | BS16# timing corrected. |
| Figures 5-16, 5-17, 5-19, 5-22 | BS16# timing corrected. BS16# must not be asserted once NA# has been sampled asserted in the current bus cycle. |
| 9.5 | 16 MHz and 20 MHz A.C. specifications revised. All timing parameters are now guaranteed at 1.5V test levels. The timing parameters have been adjusted to remain compatible with previous 0.8V/2.0V specifications. |

**The sections significantly revised since version -004 are:**

| | |
|---|---|
| Chapter 4 | 25 MHz Clock data included. |
| Table 2-4 | Segment Register Selection Rules updated. |
| 5.4.4 | Interrupt Acknowledge Cycles discussion corrected. |
| Table 5-10 | Additional Stepping Information added. |
| Table 9-3 | $I_{CC}$ values updated. |
| 9.5.2 | Table for 25 MHz A.C. Characteristics added. A.C. Characteristics tables reordered. |
| Figure 9-5 | Output Valid Delay Timing Figure reconfigured. Partial data now provided in additional Figures 9-5a and 9-5b. |
| Table 6-1 | Clock counts updated and formats corrected. |

**The sections significantly revised since version -005 are:**

| | |
|---|---|
| Table of Contents | Simplified. |
| Chapter 1 | Pin Assignment. |
| 2.3.6 | Control Register 0. |
| Table 2-4 | Segment override prefixes possible. |
| Figure 4-6 | Note added. |
| Figure 4-7 | Note added. |
| 5.2.3 | Data bus state at end of cycle. |
| 5.2.8.4 | Coprocessor error. |
| 5.5.3 | Bus activity during and following reset. |
| Figure 5-28 | ERROR#. |
| Chapter 6 | Moved forward in datasheet. |
| Chapter 7 | Moved forward in datasheet. |
| Chapter 8 | Upgraded to chapter. |
| Table 9-3 | 25 MHz $I_{CC}$ Typ. value corrected. |
| Table 9-3 | 33 MHz D.C. Specifications added. |
| Table 9-4 | 33 MHz A.C. Specifications added. |
| Figure 9-5 | t8a and t10a added. |
| Figure 9-5c | Added. |
| 9.5.6 | Added derating for $C_L = 75$ pF. |
| 9.5.7 | Added derating for $C_L = 50$ pF. |
| Figure 9.6 | t8a and t10a added. |

**The sections significantly revised since version -006 are:**

| | |
|---|---|
| 2.3.4 | Alignment of maximum sized segments. |
| 2.9.8 | Double page faults do not raise double fault exception. |
| 5.5.3 | ERROR# and BUSY# sampling after RESET. |
| Figure 5-21 | BS16# timing altered. |
| Figure 5-26 | READY# timing altered. |
| Figure 5-28 | ERROR# timing corrected. |
| 6.2.3.1 | Corrected Encoding of Register Field Chart. |
| Chapter 7 | Updated ICE-Intel386 DX information. |
| 9.5.2 | Remove preliminary stamp on 25 MHz A.C. Specifications. |
| 9.5.2 | Remove preliminary stamp on 33 MHz A.C. Specifications. |

**The sections significantly revised since version -007 are:**

| | |
|---|---|
| Table of Contents | Page numbers revised. |
| Figure 5-15 | BS16# timing altered. |
| Figure 5-22 | Previous cycle, T2 changed to Idle cycle, Ti. |
| 6.1 | Note about wait states added. |
| Table 6-1 | Opcodes for AND, OR, and XOR instructions corrected. |
| Table 6-1 | Bits 3, 4, and 5 of the ‘‘mod r/m’’ byte corrected for the LTR instruction. |
| Table 8-2 | Reference to Figure 6-4 should be reference Figure 8-2. |
| Table 8-2 | Note #4 added. |

**The sections significantly revised since version -008 are:**

| | |
|---|---|
| Table 9-3 | 20, 25, 33 MHz $I_{CC}$ specifications updated. |

Мы молодая и активно развивающаяся компания в области поставок электронных компонентов. Мы поставляем электронные компоненты отечественного и импортного производства напрямую от производителей и с крупнейших складов мира.

Благодаря сотрудничеству с мировыми поставщиками мы осуществляем комплексные и плановые поставки широчайшего спектра электронных компонентов.

Собственная эффективная логистика и склад в обеспечивает надежную поставку продукции в точно указанные сроки по всей России.

Мы осуществляем техническую поддержку нашим клиентам и предпродажную проверку качества продукции. На все поставляемые продукты мы предоставляем гарантию .

Осуществляем поставки продукции под контролем ВП МО РФ на предприятия военно-промышленного комплекса России , а также работаем в рамках 275 ФЗ с открытием отдельных счетов в уполномоченном банке. Система менеджмента качества компании соответствует требованиям ГОСТ ISO 9001.

Минимальные сроки поставки, гибкие цены, неограниченный ассортимент и индивидуальный подход к клиентам являются основой для выстраивания долгосрочного и эффективного сотрудничества с предприятиями радиоэлектронной промышленности, предприятиями ВПК и научно-исследовательскими институтами России.

С нами вы становитесь еще успешнее!

**Наши контакты:**

**Телефон:** +7 812 627 14 35

**Электронная почта:** sales@st-electron.ru

**Адрес:** 198099, Санкт-Петербург, Промышленная ул, дом № 19, литера Н, помещение 100-Н Офис 331