dsPIC33FJXXXGPX06A/X08A/X10A

16-bit Digital Signal Controllers (up to 256 KB Flash and 30 KB SRAM) with Advanced Analog

Operating Conditions

- 3.0V to 3.6V, -40ºC to +150ºC, DC to 20 MIPS
- 3.0V to 3.6V, -40ºC to +125ºC, DC to 40 MIPS

Core: 16-bit dsPIC33F CPU

- Code-efficient (C and Assembly) architecture
- Two 40-bit wide accumulators
- Single-cycle (MAC/MPY) with dual data fetch
- Single-cycle mixed-sign MUL plus hardware divide

Clock Management

- ±2% internal oscillator
- Programmable PLLs and oscillator clock sources
- Fail-Safe Clock Monitor (FSCM)
- Independent Watchdog Timer (WDT)
- Fast wake-up and start-up

Power Management

- Low-power management modes (Sleep, Idle, Doze)
- Integrated Power-on Reset and Brown-out Reset
- 2.1 mA/MHz dynamic current (typical)
- 50 µA I_{PD} current (typical)

Advanced Analog Features

- Two ADC modules:
  - Configurable as 10-bit, 1.1 Msps with four S&H or 12-bit, 500 ksps with one S&H
  - 18 analog inputs on 64-pin devices and up to 32 analog inputs on 100-pin devices
- Flexible and independent ADC trigger sources

Timers/Output Compare/Input Capture

- Up to nine 16-bit timers/counters. Can pair up to make four 32-bit timers.
- Eight Output Compare modules configurable as timers/counters
- Eight Input Capture modules

Communication Interfaces

- Two UART modules (10 Mbps)
  - With support for LIN 2.0 protocols and IrDA®
- Two 4-wire SPI modules (15 Mbps)
- Up to two I^2C™ modules (up to 1 Mbaud) with SMBus support
- Up to two Enhanced CAN (ECAN) modules (1 Mbaud) with 2.0B support
- Data Converter Interface (DCI) module with I^2S codec support

Input/Output

- Sink/Source up to 10 mA (pin specific) for standard V_{OH}/V_{OL}, up to 16 mA (pin specific) for non-standard V_{OH1}
- 5V-tolerant pins
- Selectable open drain, pull-ups, and pull-downs
- Up to 5 mA overvoltage clamp current
- External interrupts on all I/O pins

Qualification and Class B Support

- AEC-Q100 REVG (Grade 1 -40ºC to +125ºC)
- AEC-Q100 REVG (Grade 0 -40ºC to +150ºC)
- Class B Safety Library, IEC 60730

Debugger Development Support

- In-circuit and in-application programming
- Two program and two complex data breakpoints
- IEEE 1149.2-compatible (JTAG) boundary scan
- Trace and run-time watch

Packages

Type	QFN	TQFP	TQFP	TQFP
Pin Count	64	64	80	100
Contact Lead/Pitch	0.50	0.50	0.50	0.40
I/O Pins	53	53	69	85
Dimensions	9x9x0.9	10x10x1	12x12x1	14x14x1

Note: All dimensions are in millimeters (mm) unless specified.

© 2009-2012 Microchip Technology Inc.

dsPIC33F PRODUCT FAMILIES

The dsPIC33F General Purpose Family of devices are ideal for a wide variety of 16-bit MCU embedded applications. The controllers with codec interfaces are well-suited for speech and audio processing applications.

The device names, pin counts, memory sizes and peripheral availability of each family are listed below, followed by their pinout diagrams.

dsPIC33F General Purpose Family Controllers

Device	Pins	Program Flash Memory (Kbyte)	RAM (Kbyte)(1)	16-bit Timer	Input Capture	Output Compare Std. PWM	Codec Interface	ADC	UART	SPI	I²C™	Enhanced CAN™	I/O Pins (Max)(2)	Packages
dsPIC33FJ64GP206A	64	64	8	9	8	8	1	1 ADC, 18 ch	2	2	1	0	53	PT, MR
dsPIC33FJ64GP306A	64	64	16	9	8	8	1	1 ADC, 18 ch	2	2	2	0	53	PT, MR
dsPIC33FJ64GP310A	100	64	16	9	8	8	1	1 ADC, 32 ch	2	2	2	0	85	PF, PT
dsPIC33FJ64GP706A	64	64	16	9	8	8	1	2 ADC, 18 ch	2	2	2	2	53	PT, MR
dsPIC33FJ64GP708A	80	64	16	9	8	8	1	2 ADC, 24 ch	2	2	2	2	69	PT
dsPIC33FJ64GP710A	100	64	16	9	8	8	1	2 ADC, 32 ch	2	2	2	2	85	PF, PT
dsPIC33FJ128GP206A	64	128	8	9	8	8	1	1 ADC, 18 ch	2	2	1	0	53	PT, MR
dsPIC33FJ128GP306A	64	128	16	9	8	8	1	1 ADC, 18 ch	2	2	2	0	53	PT, MR
dsPIC33FJ128GP310A	100	128	16	9	8	8	1	1 ADC, 32 ch	2	2	2	0	85	PF, PT
dsPIC33FJ128GP706A	64	128	16	9	8	8	1	2 ADC, 18 ch	2	2	2	2	53	PT, MR
dsPIC33FJ128GP708A	80	128	16	9	8	8	1	2 ADC, 24 ch	2	2	2	2	69	PT
dsPIC33FJ128GP710A	100	128	16	9	8	8	1	2 ADC, 32 ch	2	2	2	2	85	PF, PT
dsPIC33FJ256GP506A	64	256	16	9	8	8	1	1 ADC, 18 ch	2	2	2	1	53	PT, MR
dsPIC33FJ256GP510A	100	256	16	9	8	8	1	1 ADC, 32 ch	2	2	2	1	85	PF, PT
dsPIC33FJ256GP710A	100	256	30	9	8	8	1	2 ADC, 32 ch	2	2	2	2	85	PF, PT

Note 1: RAM size is inclusive of 2 Kbytes DMA RAM.
2: Maximum I/O pin count includes pins shared by the peripheral functions.

© 2009-2012 Microchip Technology Inc.

Pin Diagrams

64-Pin QFN(1)

■ = Pins are up to 5V tolerant

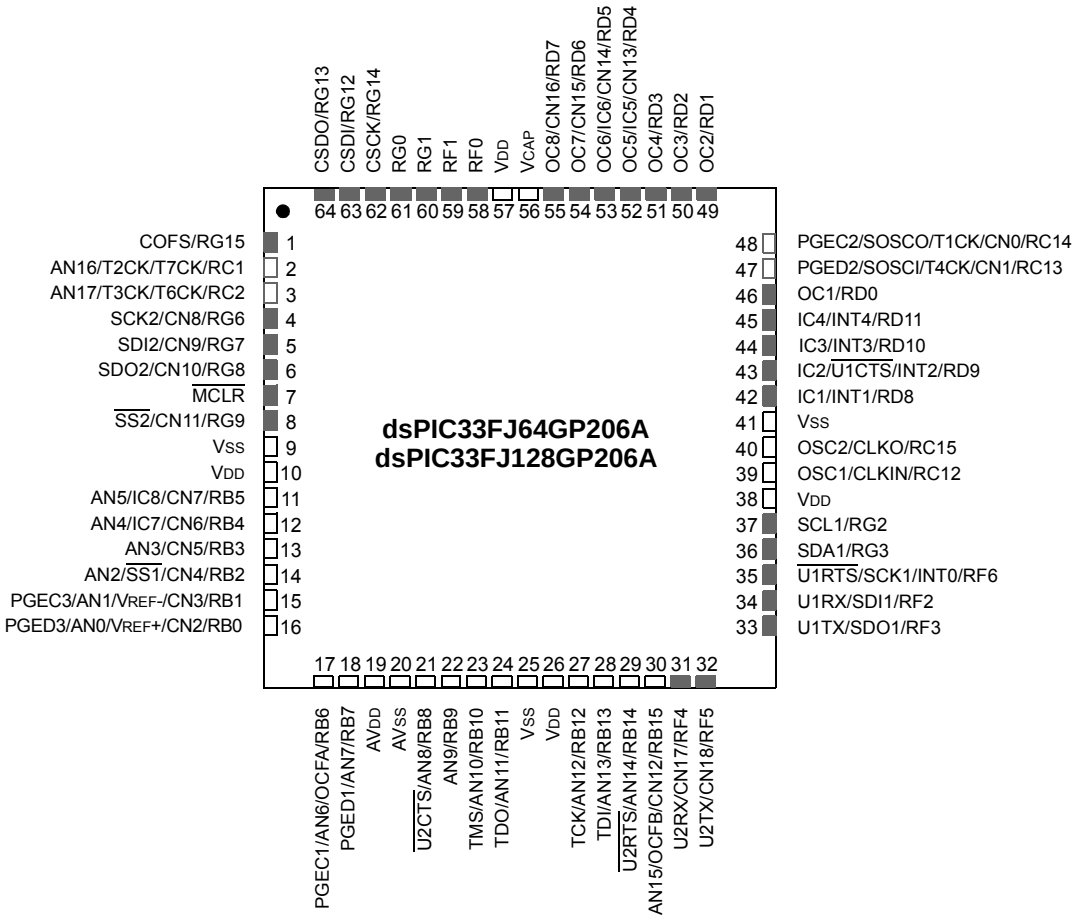

Note 1: The metal plane at the bottom of the device is not connected to any pins and should be connected to VSS externally.

Pin Diagrams (Continued)

64-Pin QFN(1)

■ = Pins are up to 5V tolerant

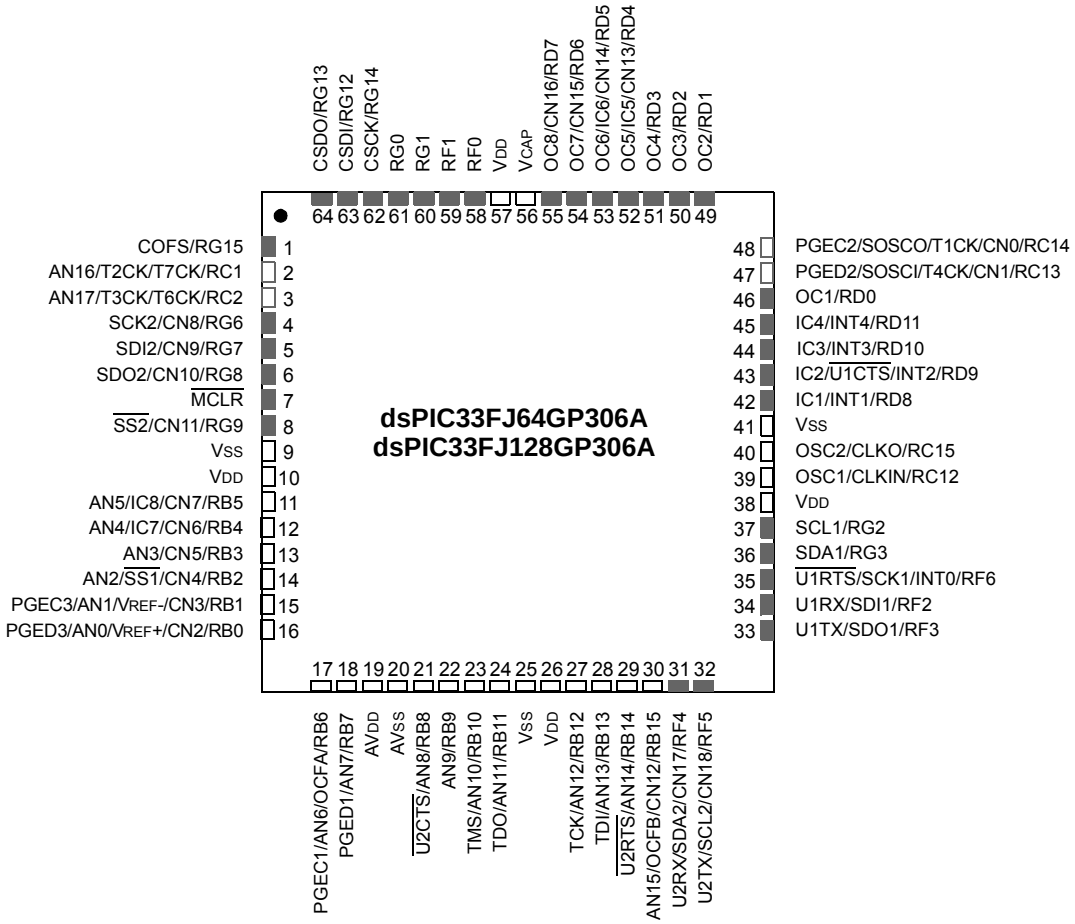

Note 1: The metal plane at the bottom of the device is not connected to any pins and should be connected to VSS externally.

© 2009-2012 Microchip Technology Inc.

Pin Diagrams (Continued)

64-Pin QFN(1)

■ = Pins are up to 5V tolerant

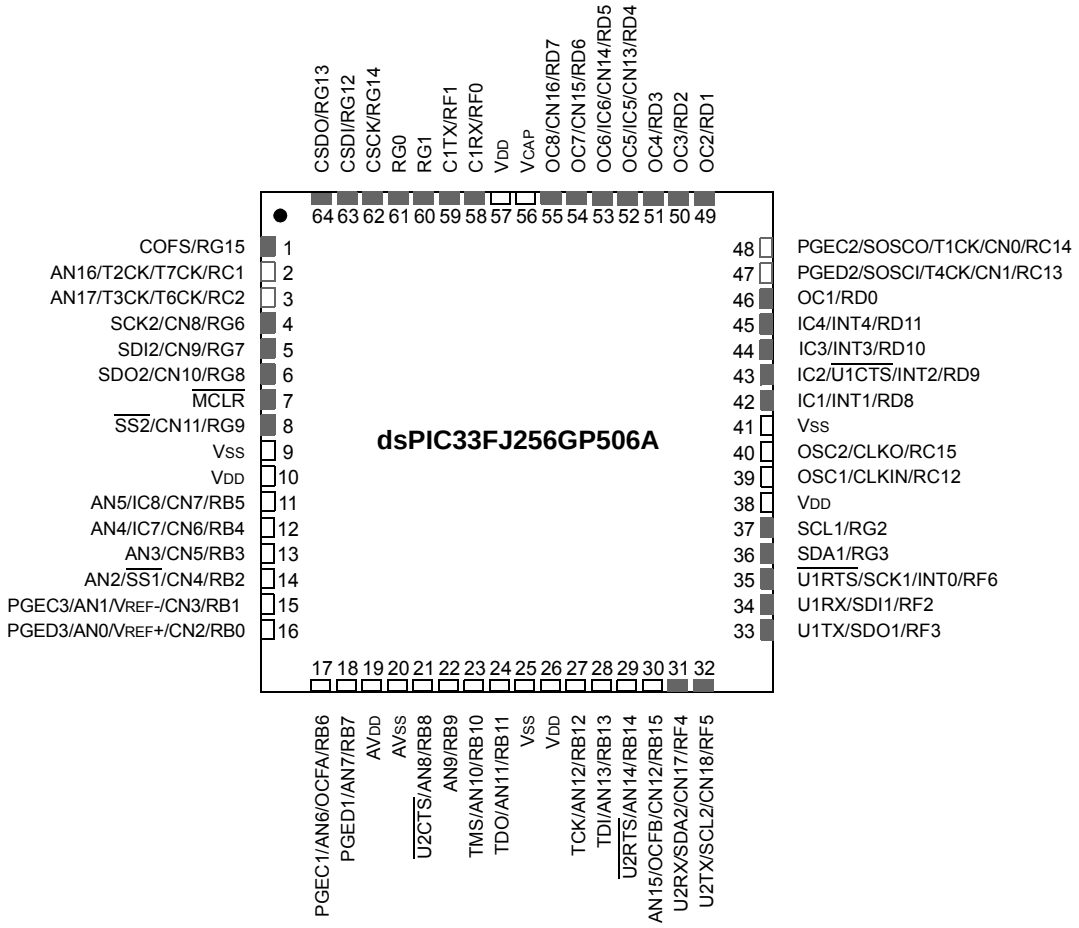

Note 1: The metal plane at the bottom of the device is not connected to any pins and should be connected to VSS externally.

Pin Diagrams (Continued)

64-Pin QFN(1)

■ = Pins are up to 5V tolerant

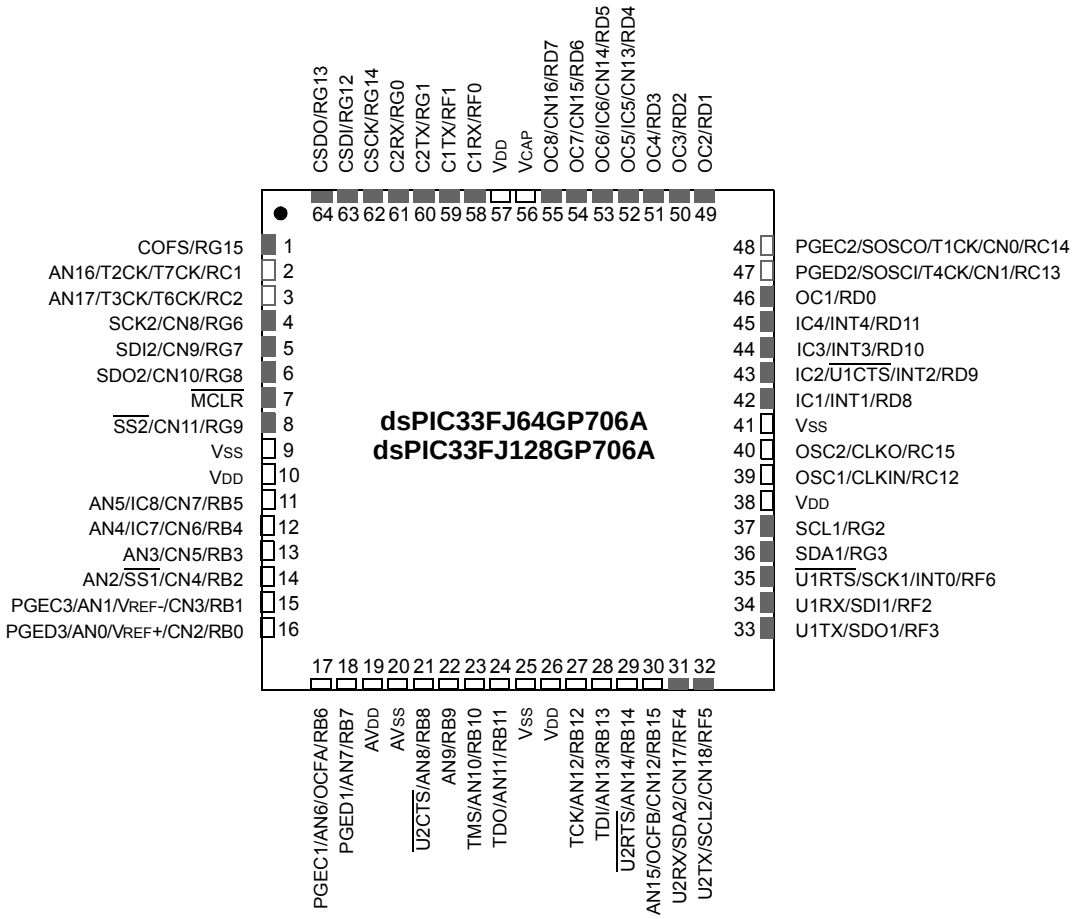

Note 1: The metal plane at the bottom of the device is not connected to any pins and should be connected to VSS externally.

© 2009-2012 Microchip Technology Inc.

Pin Diagrams (Continued)

64-Pin TQFP

■ = Pins are up to 5V tolerant

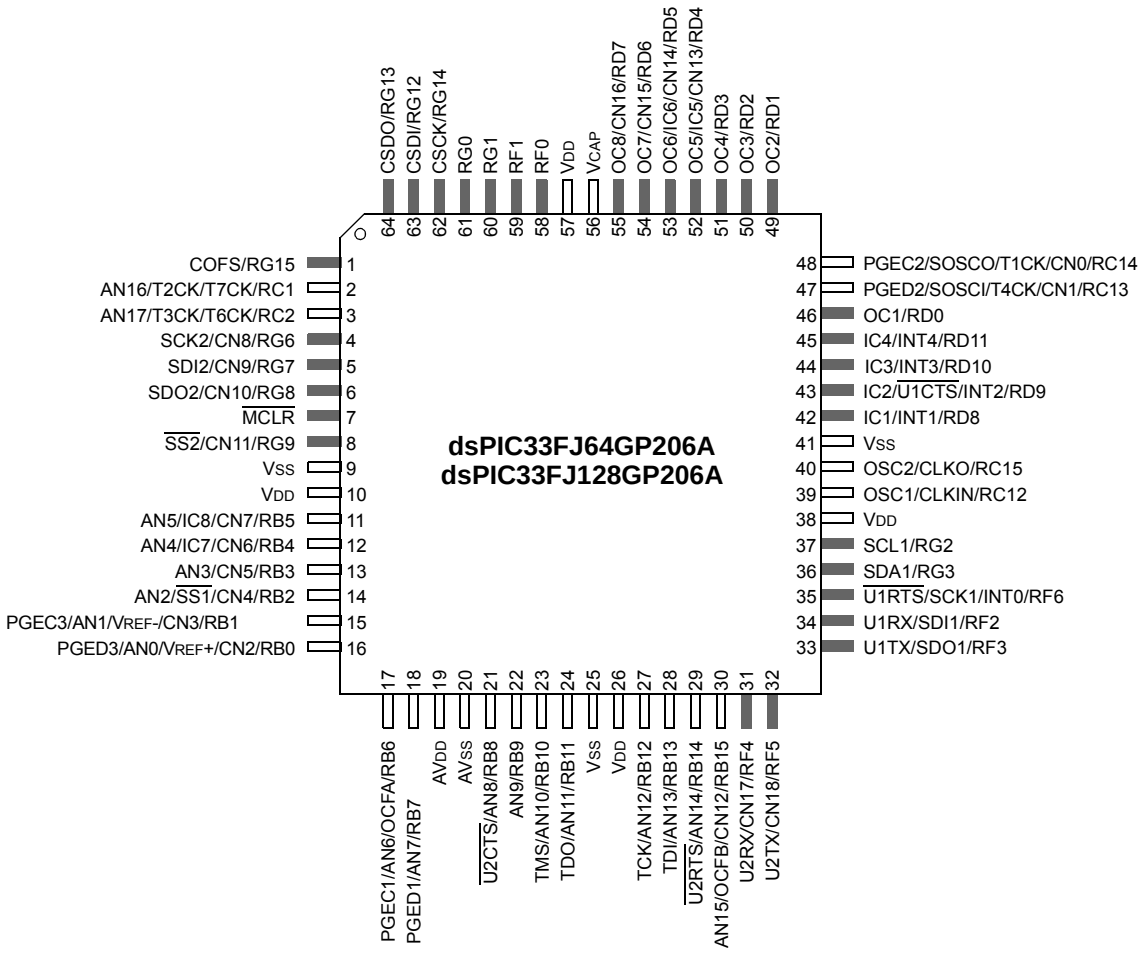

Pin Diagrams (Continued)

64-Pin TQFP

■ = Pins are up to 5V tolerant

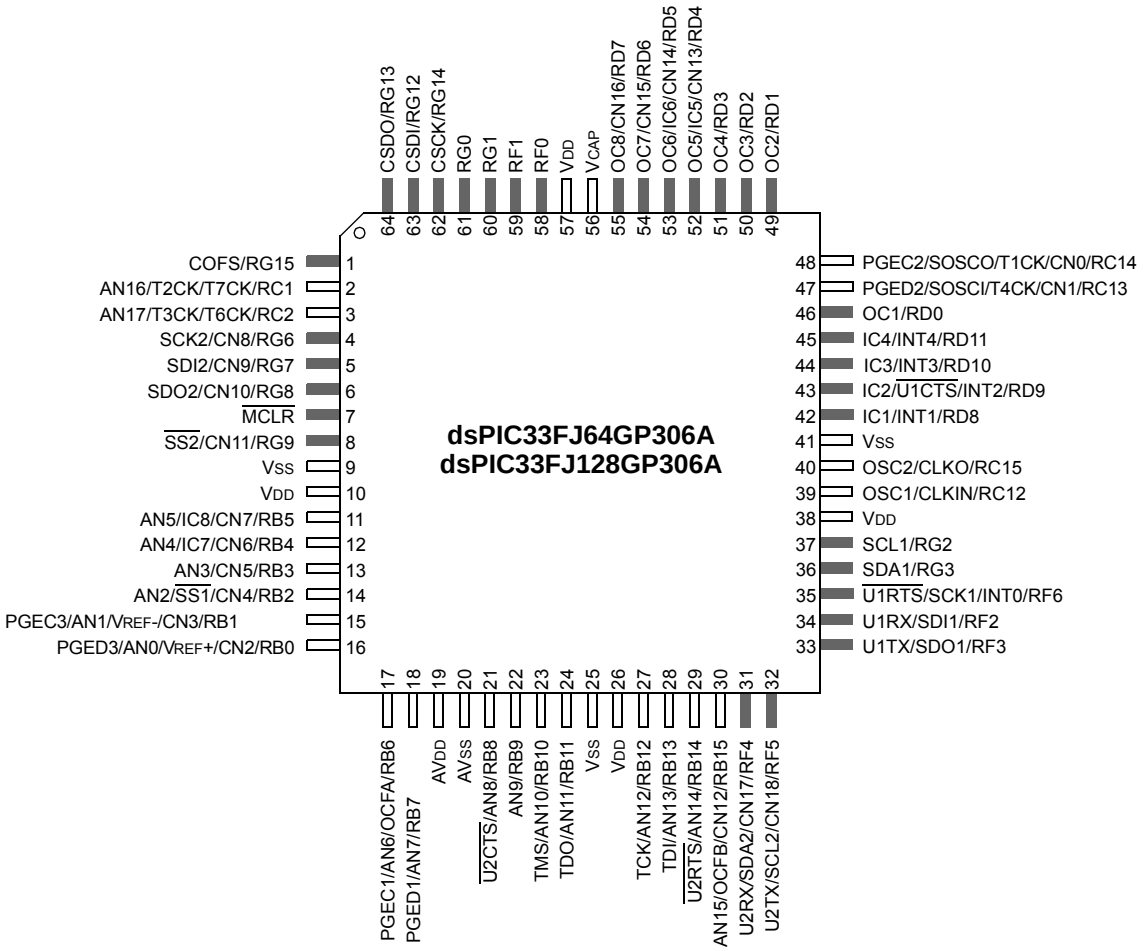

© 2009-2012 Microchip Technology Inc.

Pin Diagrams (Continued)

64-Pin TQFP

■ = Pins are up to 5V tolerant

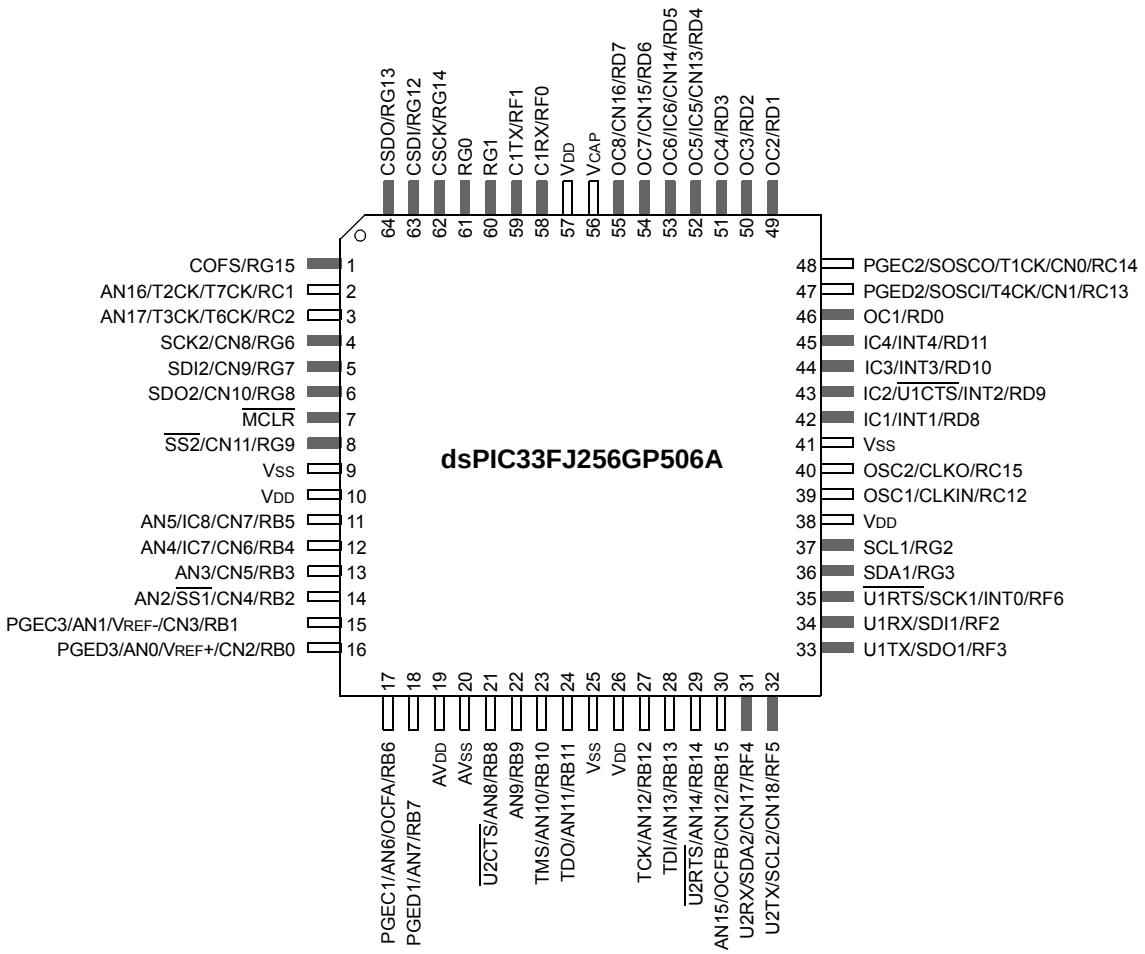

Pin Diagrams (Continued)

64-Pin TQFP

■ = Pins are up to 5V tolerant

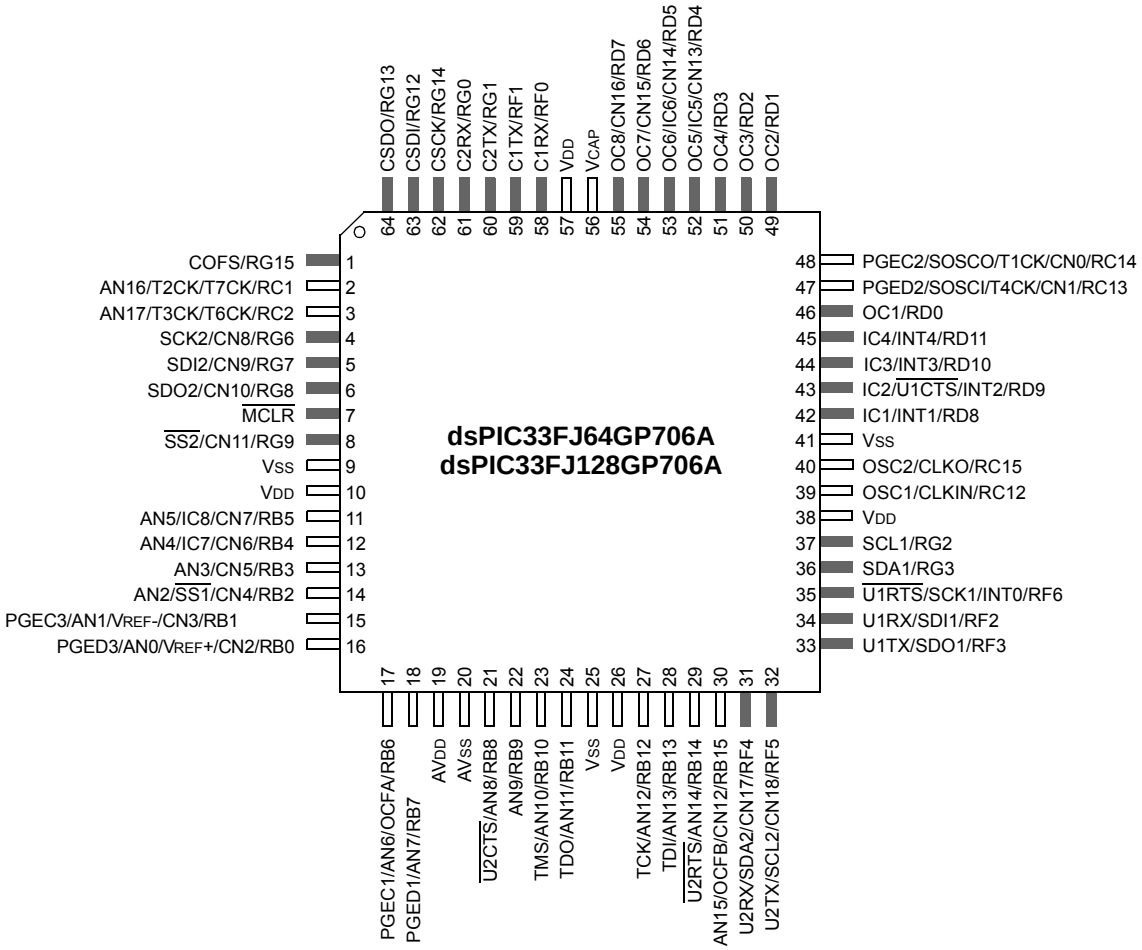

© 2009-2012 Microchip Technology Inc.

Pin Diagrams (Continued)

80-Pin TQFP

■ = Pins are up to 5V tolerant

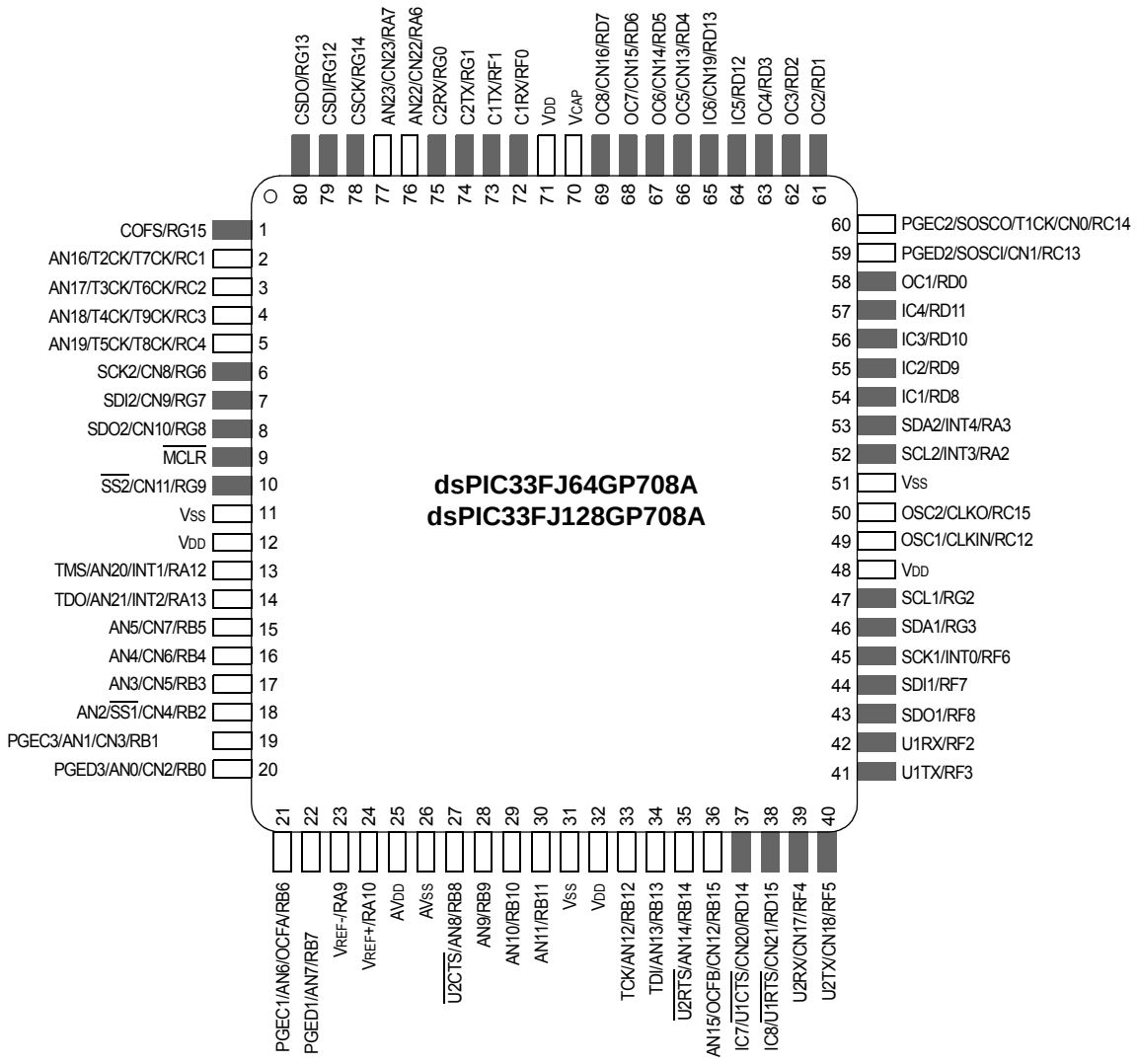

Pin Diagrams (Continued)

100-Pin TQFP

■ = Pins are up to 5V tolerant

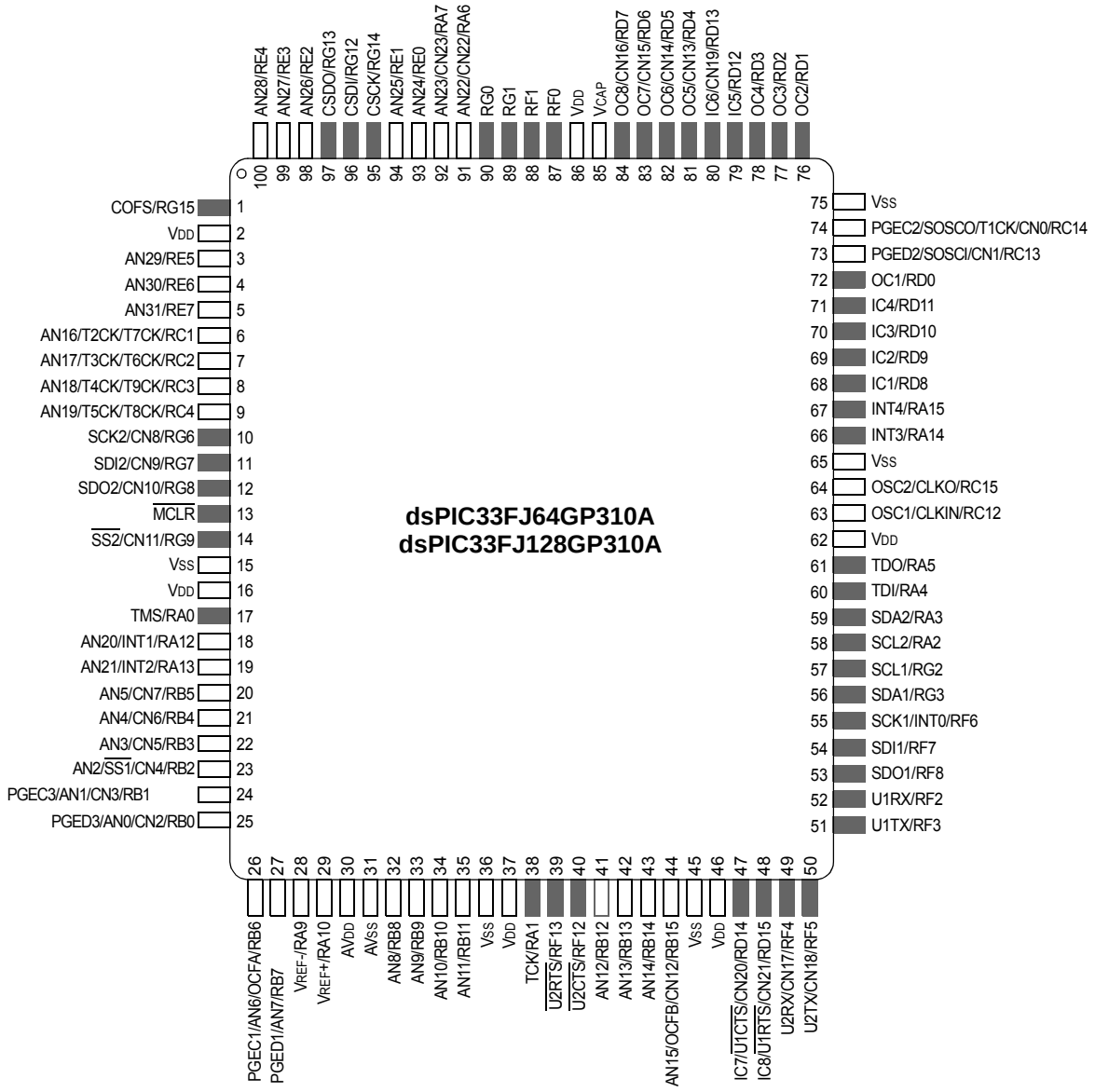

© 2009-2012 Microchip Technology Inc.

Pin Diagrams (Continued)

100-Pin TQFP

■ = Pins are up to 5V tolerant

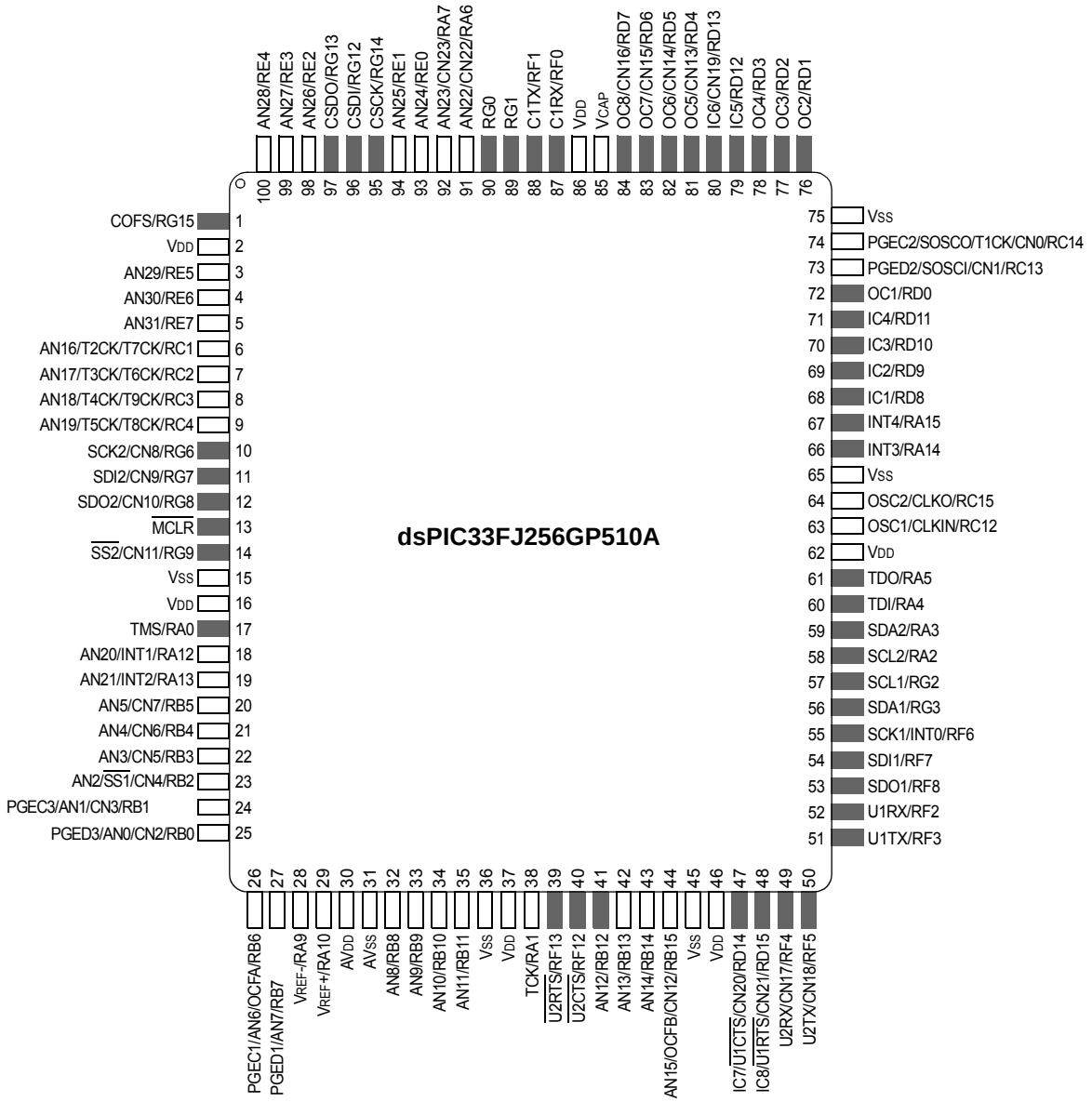

Pin Diagrams (Continued)

100-Pin TQFP

■ = Pins are up to 5V tolerant

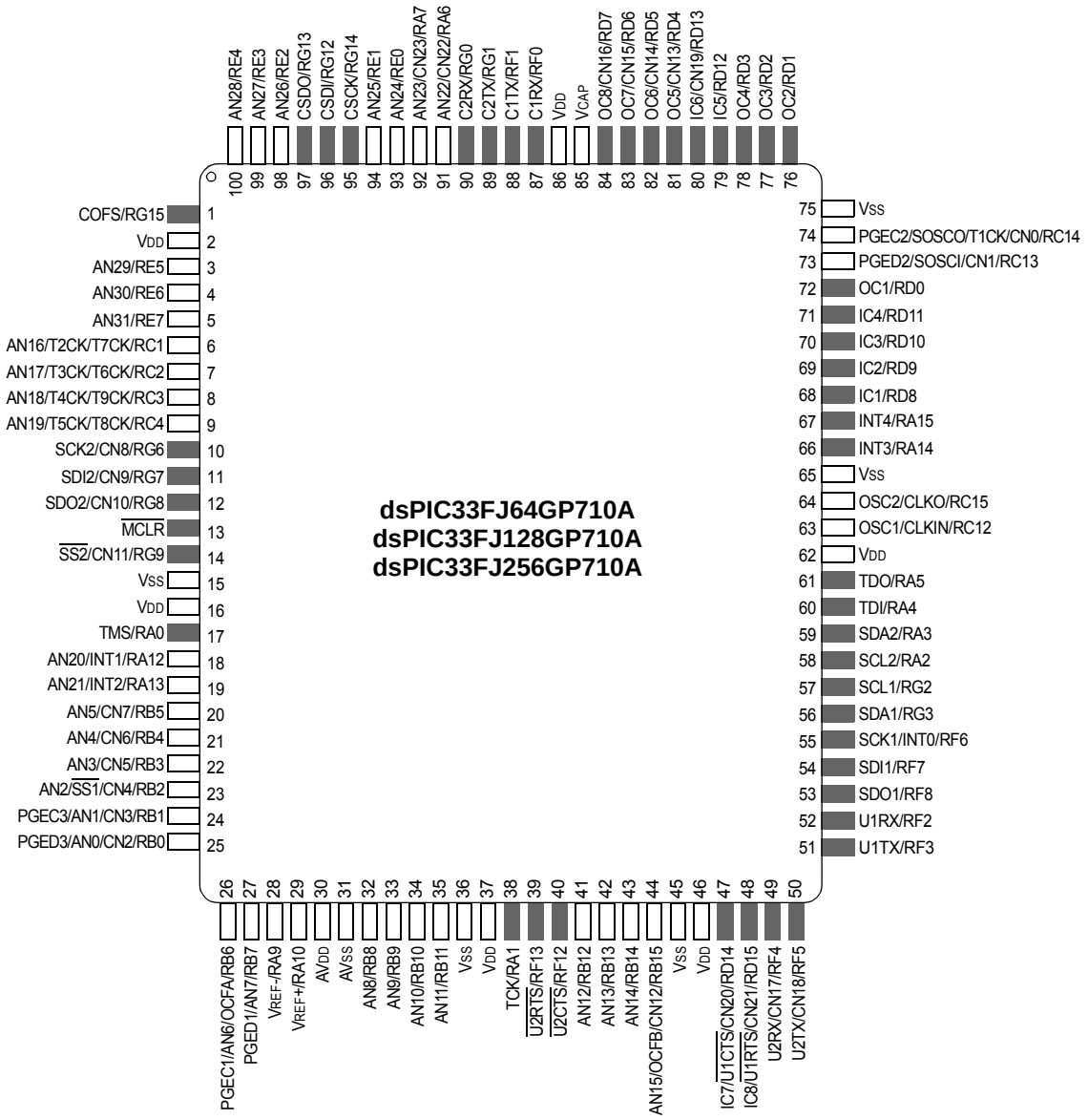

© 2009-2012 Microchip Technology Inc.

Table of Contents

dsPIC33F Product Families 2
1.0 Device Overview 19
2.0 Guidelines for Getting Started with 16-Bit Digital Signal Controllers 23
3.0 CPU 27
4.0 Memory Organization 39
5.0 Flash Program Memory 77
6.0 Reset 83
7.0 Interrupt Controller 89
8.0 Direct Memory Access (DMA) 135
9.0 Oscillator Configuration 145
10.0 Power-Saving Features 155
11.0 I/O Ports 163
12.0 Timer1 167
13.0 Timer2/3, Timer4/5, Timer6/7 and Timer8/9 169
14.0 Input Capture 175
15.0 Output Compare 177
16.0 Serial Peripheral Interface (SPI) 181
17.0 Inter-Integrated Circuit™ (I^2C™) 187
18.0 Universal Asynchronous Receiver Transmitter (UART) 195
19.0 Enhanced CAN (ECAN™) Module 201
20.0 Data Converter Interface (DCI) Module 229
21.0 10-Bit/12-Bit Analog-to-Digital Converter (ADC) 237
22.0 Special Features 251
23.0 Instruction Set Summary 259
24.0 Development Support 267
25.0 Electrical Characteristics 271
26.0 High Temperature Electrical Characteristics 321
27.0 DC and AC Device Characteristics Graphs 331
28.0 Packaging Information 335
Appendix A: Migrating from dsPIC33FJXXXGPX06/X08/X10 Devices to dsPIC33FJXXXGPX06A/X08A/X10A Devices 347
Appendix B: Revision History 348
Index 353
The Microchip Web Site 357
Customer Change Notification Service 357
Customer Support 357
Reader Response 358
Product Identification System 359

TO OUR VALUED CUSTOMERS

It is our intention to provide our valued customers with the best documentation possible to ensure successful use of your Microchip products. To this end, we will continue to improve our publications to better suit your needs. Our publications will be refined and enhanced as new volumes and updates are introduced.

If you have any questions or comments regarding this publication, please contact the Marketing Communications Department via E-mail at **docerrors@microchip.com** or fax the **Reader Response Form** in the back of this data sheet to (480) 792-4150. We welcome your feedback.

Most Current Data Sheet

To obtain the most up-to-date version of this data sheet, please register at our Worldwide Web site at:

http://www.microchip.com

You can determine the version of a data sheet by examining its literature number found on the bottom outside corner of any page. The last character of the literature number is the version number, (e.g., DS30000A is version A of document DS30000).

Errata

An errata sheet, describing minor operational differences from the data sheet and recommended workarounds, may exist for current devices. As device/documentation issues become known to us, we will publish an errata sheet. The errata will specify the revision of silicon and revision of document to which it applies.

To determine if an errata sheet exists for a particular device, please check with one of the following:

- Microchip's Worldwide Web site; **http://www.microchip.com**
- Your local Microchip sales office (see last page)

When contacting a sales office, please specify which device, revision of silicon and data sheet (include literature number) you are using.

Customer Notification System

Register on our web site at **www.microchip.com** to receive the most current information on all of our products.

© 2009-2012 Microchip Technology Inc.

Referenced Sources

This device data sheet is based on the following individual chapters of the *"dsPIC33F/PIC24H Family Reference Manual"*. These documents should be considered as the general reference for the operation of a particular module or device feature.

Note: To access the documents listed below, browse to the documentation section of the dsPIC33FJ256GP710A product page on the Microchip web site (www.microchip.com) or select a family reference manual section from the following list.

In addition to parameters, features, and other documentation, the resulting page provides links to the related family reference manual sections.

- **Section 1. "Introduction"** (DS70197)
- **Section 2. "CPU"** (DS70204)
- **Section 3. "Data Memory"** (DS70202)
- **Section 4. "Program Memory"** (DS70203)
- **Section 5. "Flash Programming"** (DS70191)
- **Section 6. "Interrupts"** (DS70184)
- **Section 7. "Oscillator"** (DS70186)
- **Section 8. "Reset"** (DS70192)
- **Section 9. "Watchdog Timer and Power-Saving Modes"** (DS70196)
- **Section 10. "I/O Ports"** (DS70193)
- **Section 11. "Timers"** (DS70205)
- **Section 12. "Input Capture"** (DS70198)
- **Section 13. "Output Compare"** (DS70209)
- **Section 16. "Analog-to-Digital Converter (ADC)"** (DS70183)
- **Section 17. "UART"** (DS70188)
- **Section 18. "Serial Peripheral Interface (SPI)"** (DS70206)
- **Section 19. "Inter-Integrated Circuit™ (I2C™)"** (DS70195)
- **Section 20. "Data Converter Interface (DCI)"** (DS70288)
- **Section 21. "Enhanced Controller Area Network (ECAN™)"** (DS70185)
- **Section 22. "Direct Memory Access (DMA)"** (DS70182)
- **Section 23. "CodeGuard™ Security"** (DS70199)
- **Section 24. "Programming and Diagnostics"** (DS70207)
- **Section 25. "Device Configuration"** (DS70194)

NOTES:

© 2009-2012 Microchip Technology Inc.

1.0 DEVICE OVERVIEW

Note: This data sheet summarizes the features of the dsPIC33FJXXXGPX06A/X08A/X10A family of devices. However, it is not intended to be a comprehensive reference source. To complement the information in this data sheet, refer to the latest family reference sections of the *"dsPIC33F/PIC24H Family Reference Manual"*, which are available from the Microchip web site (www.microchip.com).

This document contains device specific information for the following devices:

- dsPIC33FJ64GP206A
- dsPIC33FJ64GP306A
- dsPIC33FJ64GP310A
- dsPIC33FJ64GP706A
- dsPIC33FJ64GP708A
- dsPIC33FJ64GP710A
- dsPIC33FJ128GP206A
- dsPIC33FJ128GP306A
- dsPIC33FJ128GP310A
- dsPIC33FJ128GP706A
- dsPIC33FJ128GP708A
- dsPIC33FJ128GP710A
- dsPIC33FJ256GP506A
- dsPIC33FJ256GP510A
- dsPIC33FJ256GP710A

The dsPIC33FJXXXGPX06A/X08A/X10A General Purpose Family of device includes devices with a wide range of pin counts (64, 80 and 100), different program memory sizes (64 Kbytes, 128 Kbytes and 256 Kbytes) and different RAM sizes (8 Kbytes, 16 Kbytes and 30 Kbytes).

This feature makes the family suitable for a wide variety of high-performance digital signal control applications. The device is pin compatible with the PIC24H family of devices, and also share a very high degree of compatibility with the dsPIC30F family devices. This allows for easy migration between device families as may be necessitated by the specific functionality, computational resource and system cost requirements of the application.

The dsPIC33FJXXXGPX06A/X08A/X10A device family employs a powerful 16-bit architecture that seamlessly integrates the control features of a Microcontroller (MCU) with the computational capabilities of a Digital Signal Processor (DSP). The resulting functionality is ideal for applications that rely on high-speed, repetitive computations, as well as control.

The DSP engine, dual 40-bit accumulators, hardware support for division operations, barrel shifter, 17 x 17 multiplier, a large array of 16-bit working registers and a wide variety of data addressing modes, together provide the dsPIC33FJXXXGPX06A/X08A/X10A Central Processing Unit (CPU) with extensive mathematical processing capability. Flexible and deterministic interrupt handling, coupled with a powerful array of peripherals, renders the dsPIC33FJXXXGPX06A/X08A/X10A devices suitable for control applications. Further, Direct Memory Access (DMA) enables overhead-free transfer of data between several peripherals and a dedicated DMA RAM. Reliable, field programmable Flash program memory ensures scalability of applications that use dsPIC33FJXXXGPX06A/X08A/X10A devices.

Figure 1-1 illustrates a general block diagram of the various core and peripheral modules in the dsPIC33FJXXXGPX06A/X08A/X10A family of devices. Table 1-1 provides the functions of the various pins illustrated in the pinout diagrams.

FIGURE 1-1: dsPIC33FJXXXGPX06A/X08A/X10A GENERAL BLOCK DIAGRAM

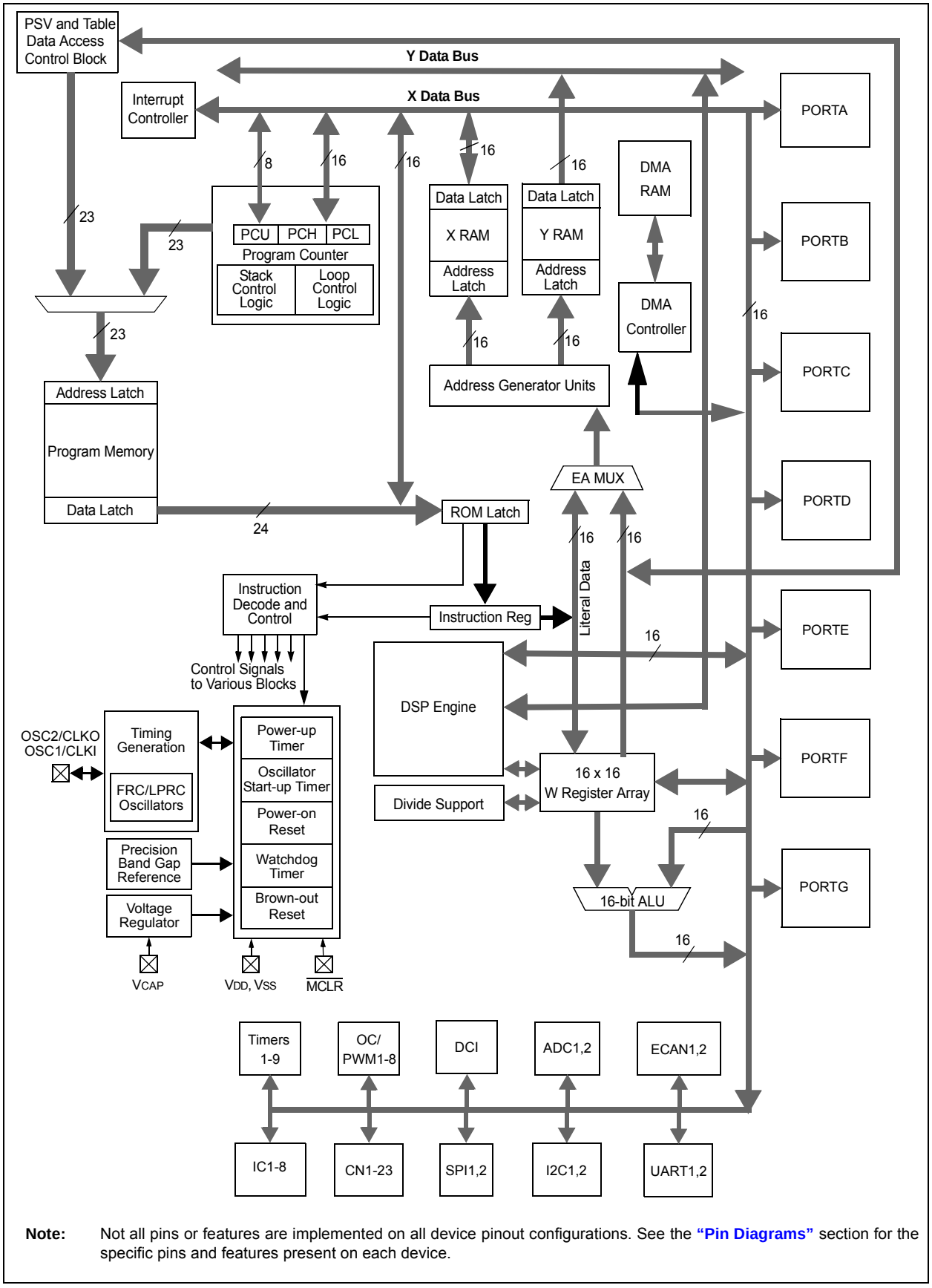

Note: Not all pins or features are implemented on all device pinout configurations. See the **"Pin Diagrams"** section for the specific pins and features present on each device.

© 2009-2012 Microchip Technology Inc.

TABLE 1-1: PINOUT I/O DESCRIPTIONS

Pin Name	Pin Type	Buffer Type	Description
AN0-AN31	I	Analog	Analog input channels.
AVDD	P	P	Positive supply for analog modules. This pin must be connected at all times.
AVSS	P	P	Ground reference for analog modules.
CLKI CLKO	I O	ST/CMOS —	External clock source input. Always associated with OSC1 pin function. Oscillator crystal output. Connects to crystal or resonator in Crystal Oscillator mode. Optionally functions as CLKO in RC and EC modes. Always associated with OSC2 pin function.
CN0-CN23	I	ST	Input change notification inputs. Can be software programmed for internal weak pull-ups on all inputs.
COFS CSCK CSDI CSDO	I/O I/O I O	ST ST ST —	Data Converter Interface frame synchronization pin. Data Converter Interface serial clock input/output pin. Data Converter Interface serial data input pin. Data Converter Interface serial data output pin.
C1RX C1TX C2RX C2TX	I O I O	ST — ST —	ECAN1 bus receive pin. ECAN1 bus transmit pin. ECAN2 bus receive pin. ECAN2 bus transmit pin.
PGED1 PGEC1 PGED2 PGEC2 PGED3 PGEC3	I/O I I/O I I/O I	ST ST ST ST ST ST	Data I/O pin for programming/debugging communication channel 1. Clock input pin for programming/debugging communication channel 1. Data I/O pin for programming/debugging communication channel 2. Clock input pin for programming/debugging communication channel 2. Data I/O pin for programming/debugging communication channel 3. Clock input pin for programming/debugging communication channel 3.
IC1-IC8	I	ST	Capture inputs 1 through 8.
INT0 INT1 INT2 INT3 INT4	I I I I I	ST ST ST ST ST	External interrupt 0. External interrupt 1. External interrupt 2. External interrupt 3. External interrupt 4.
$\overline{\text{MCLR}}$	I/P	ST	Master Clear (Reset) input. This pin is an active-low Reset to the device.
OCFA OCFB OC1-OC8	I I O	ST ST —	Compare Fault A input (for Compare Channels 1, 2, 3 and 4). Compare Fault B input (for Compare Channels 5, 6, 7 and 8). Compare outputs 1 through 8.
OSC1 OSC2	I I/O	ST/CMOS —	Oscillator crystal input. ST buffer when configured in RC mode; CMOS otherwise. Oscillator crystal output. Connects to crystal or resonator in Crystal Oscillator mode. Optionally functions as CLKO in RC and EC modes.
RA0-RA7 RA9-RA10 RA12-RA15	I/O I/O I/O	ST ST ST	PORTA is a bidirectional I/O port.
RB0-RB15	I/O	ST	PORTB is a bidirectional I/O port.
RC1-RC4 RC12-RC15	I/O I/O	ST ST	PORTC is a bidirectional I/O port.
RD0-RD15	I/O	ST	PORTD is a bidirectional I/O port.
RE0-RE7	I/O	ST	PORTE is a bidirectional I/O port.
RF0-RF8 RF12-RF13	I/O I/O	ST ST	PORTF is a bidirectional I/O port.

Legend: CMOS = CMOS compatible input or output; Analog = Analog input; P = Power
ST = Schmitt Trigger input with CMOS levels; O = Output; I = Input

TABLE 1-1: PINOUT I/O DESCRIPTIONS (CONTINUED)

Pin Name	Pin Type	Buffer Type	Description
RG0-RG3	I/O	ST	PORTG is a bidirectional I/O port.
RG6-RG9	I/O	ST	
RG12-RG15	I/O	ST	
SCK1	I/O	ST	Synchronous serial clock input/output for SPI1.
SDI1	I	ST	SPI1 data in.
SDO1	O	—	SPI1 data out.
$\overline{SS1}$	I/O	ST	SPI1 slave synchronization or frame pulse I/O.
SCK2	I/O	ST	Synchronous serial clock input/output for SPI2.
SDI2	I	ST	SPI2 data in.
SDO2	O	—	SPI2 data out.
$\overline{SS2}$	I/O	ST	SPI2 slave synchronization or frame pulse I/O.
SCL1	I/O	ST	Synchronous serial clock input/output for I2C1.
SDA1	I/O	ST	Synchronous serial data input/output for I2C1.
SCL2	I/O	ST	Synchronous serial clock input/output for I2C2.
SDA2	I/O	ST	Synchronous serial data input/output for I2C2.
SOSCI	I	ST/CMOS	32.768 kHz low-power oscillator crystal input; CMOS otherwise.
SOSCO	O	—	32.768 kHz low-power oscillator crystal output.
TMS	I	ST	JTAG Test mode select pin.
TCK	I	ST	JTAG test clock input pin.
TDI	I	ST	JTAG test data input pin.
TDO	O	—	JTAG test data output pin.
T1CK	I	ST	Timer1 external clock input.
T2CK	I	ST	Timer2 external clock input.
T3CK	I	ST	Timer3 external clock input.
T4CK	I	ST	Timer4 external clock input.
T5CK	I	ST	Timer5 external clock input.
T6CK	I	ST	Timer6 external clock input.
T7CK	I	ST	Timer7 external clock input.
T8CK	I	ST	Timer8 external clock input.
T9CK	I	ST	Timer9 external clock input.
$\overline{U1CTS}$	I	ST	UART1 clear to send.
$\overline{U1RTS}$	O	—	UART1 ready to send.
U1RX	I	ST	UART1 receive.
U1TX	O	—	UART1 transmit.
$\overline{U2CTS}$	I	ST	UART2 clear to send.
$\overline{U2RTS}$	O	—	UART2 ready to send.
U2RX	I	ST	UART2 receive.
U2TX	O	—	UART2 transmit.
V_{DD}	P	—	Positive supply for peripheral logic and I/O pins.
V_{CAP}	P	—	CPU logic flter capacitor connection.
V_{SS}	P	—	Ground reference for logic and I/O pins.
V_{REF}+	I	Analog	Analog voltage reference (high) input.
V_{REF}-	I	Analog	Analog voltage reference (low) input.

Legend: CMOS = CMOS compatible input or output; Analog = Analog input; P = Power
ST = Schmitt Trigger input with CMOS levels; O = Output; I = Input

© 2009-2012 Microchip Technology Inc.

2.0 GUIDELINES FOR GETTING STARTED WITH 16-BIT DIGITAL SIGNAL CONTROLLERS

Note 1: This data sheet summarizes the features of the dsPIC33FJXXXGPX06A/X08A/X10A family of devices. It is not intended to be a comprehensive reference source. To complement the information in this data sheet, refer to the *"dsPIC33F/PIC24H Family Reference Manual"*. Please see the Microchip web site (www.microchip.com) for the latest dsPIC33F/PIC24H Family Reference Manual sections.

2: Some registers and associated bits described in this section may not be available on all devices. Refer to **Section 4.0 "Memory Organization"** in this data sheet for device-specific register and bit information.

2.1 Basic Connection Requirements

Getting started with the dsPIC33FJXXXGPX06A/X08A/X10A family of 16-bit Digital Signal Controllers (DSCs) requires attention to a minimal set of device pin connections before proceeding with development. The following is a list of pin names, which must always be connected:

- All VDD and VSS pins
  (see **Section 2.2 "Decoupling Capacitors"**)
- All AVDD and AVSS pins (regardless if ADC module is not used)
  (see **Section 2.2 "Decoupling Capacitors"**)
- VCAP
  (see **Section 2.3 "CPU Logic Filter Capacitor Connection (VCAP)"**)
- $\overline{\text{MCLR}}$ pin
  (see **Section 2.4 "Master Clear (MCLR) Pin"**)
- PGECx/PGEDx pins used for In-Circuit Serial Programming™ (ICSP™) and debugging purposes
  (see **Section 2.5 "ICSP Pins"**)
- OSC1 and OSC2 pins when external oscillator source is used
  (see **Section 2.6 "External Oscillator Pins"**)

Additionally, the following pins may be required:

- VREF+/VREF- pins used when external voltage reference for ADC module is implemented

Note: The AVDD and AVSS pins must be connected independent of the ADC voltage reference source.

2.2 Decoupling Capacitors

The use of decoupling capacitors on every pair of power supply pins, such as VDD, VSS, AVDD and AVSS is required.

Consider the following criteria when using decoupling capacitors:

- **Value and type of capacitor:** Recommendation of 0.1 µF (100 nF), 10-20V. This capacitor should be a low-ESR and have resonance frequency in the range of 20 MHz and higher. It is recommended that ceramic capacitors be used.
- **Placement on the printed circuit board:** The decoupling capacitors should be placed as close to the pins as possible. It is recommended to place the capacitors on the same side of the board as the device. If space is constricted, the capacitor can be placed on another layer on the PCB using a via; however, ensure that the trace length from the pin to the capacitor is within one-quarter inch (6 mm) in length.
- **Handling high frequency noise:** If the board is experiencing high frequency noise, upward of tens of MHz, add a second ceramic-type capacitor in parallel to the above described decoupling capacitor. The value of the second capacitor can be in the range of 0.01 µF to 0.001 µF. Place this second capacitor next to the primary decoupling capacitor. In high-speed circuit designs, consider implementing a decade pair of capacitances as close to the power and ground pins as possible. For example, 0.1 µF in parallel with 0.001 µF.
- **Maximizing performance:** On the board layout from the power supply circuit, run the power and return traces to the decoupling capacitors first, and then to the device pins. This ensures that the decoupling capacitors are first in the power chain. Equally important is to keep the trace length between the capacitor and the power pins to a minimum thereby reducing PCB track inductance.

FIGURE 2-1: RECOMMENDED MINIMUM CONNECTION

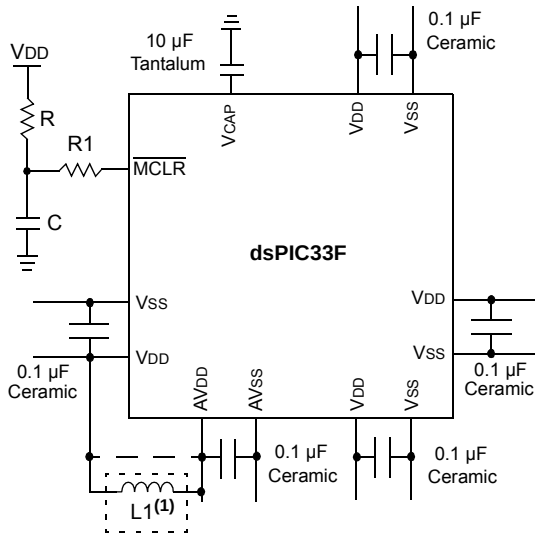

Note 1: As an option, instead of a hard-wired connection, an inductor (L1) can be substituted between VDD and AVDD to improve ADC noise rejection. The inductor impedance should be less than 1Ω and the inductor capacity greater than 10 mA.

Where:

$$f = \frac{F_{CNV}}{2} \quad \text{(i.e., ADC conversion rate/2)}$$

$$f = \frac{1}{(2\pi\sqrt{LC})}$$

$$L = \left(\frac{1}{(2\pi f\sqrt{C})}\right)^2$$

2.2.1 TANK CAPACITORS

On boards with power traces running longer than six inches in length, it is suggested to use a tank capacitor for integrated circuits including DSCs to supply a local power source. The value of the tank capacitor should be determined based on the trace resistance that connects the power supply source to the device, and the maximum current drawn by the device in the application. In other words, select the tank capacitor so that it meets the acceptable voltage sag at the device. Typical values range from 4.7 µF to 47 µF.

2.3 CPU Logic Filter Capacitor Connection (VCAP)

A low-ESR (< 5 Ohms) capacitor is required on the VCAP pin, which is used to stabilize the voltage regulator output voltage. The VCAP pin must not be connected to VDD, and must have a capacitor between 4.7 µF and 10 µF, 16V connected to ground. The type can be ceramic or tantalum. Refer to **Section 25.0 "Electrical Characteristics"** for additional information.

The placement of this capacitor should be close to the VCAP. It is recommended that the trace length not exceed one-quarter inch (6 mm). Refer to **Section 22.2 "On-Chip Voltage Regulator"** for details.

2.4 Master Clear ($\overline{\text{MCLR}}$) Pin

The $\overline{\text{MCLR}}$ pin provides for two specific device functions:

- Device Reset
- Device programming and debugging

During device programming and debugging, the resistance and capacitance that can be added to the pin must be considered. Device programmers and debuggers drive the $\overline{\text{MCLR}}$ pin. Consequently, specific voltage levels (VIH and VIL) and fast signal transitions must not be adversely affected. Therefore, specific values of R and C will need to be adjusted based on the application and PCB requirements.

For example, as shown in Figure 2-2, it is recommended that the capacitor C, be isolated from the $\overline{\text{MCLR}}$ pin during programming and debugging operations.

Place the components shown in Figure 2-2 within one-quarter inch (6 mm) from the $\overline{\text{MCLR}}$ pin.

FIGURE 2-2: EXAMPLE OF $\overline{\text{MCLR}}$ PIN CONNECTIONS

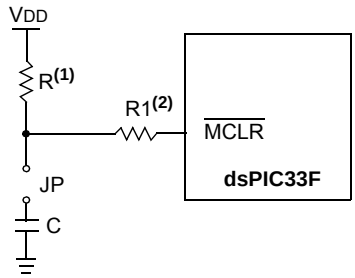

Note 1: R ≤ 10 kΩ is recommended. A suggested starting value is 10 kΩ. Ensure that the $\overline{\text{MCLR}}$ pin VIH and VIL specifications are met.

2: R1 ≤ 470Ω will limit any current flowing into $\overline{\text{MCLR}}$ from the external capacitor C, in the event of $\overline{\text{MCLR}}$ pin breakdown, due to Electrostatic Discharge (ESD) or Electrical Overstress (EOS). Ensure that the $\overline{\text{MCLR}}$ pin VIH and VIL specifications are met.

© 2009-2012 Microchip Technology Inc.

2.5 ICSP Pins

The PGECx and PGEDx pins are used for In-Circuit Serial Programming™ (ICSP™) and debugging purposes. It is recommended to keep the trace length between the ICSP connector and the ICSP pins on the device as short as possible. If the ICSP connector is expected to experience an ESD event, a series resistor is recommended, with the value in the range of a few tens of Ohms, not to exceed 100 Ohms.

Pull-up resistors, series diodes, and capacitors on the PGECx and PGEDx pins are not recommended as they will interfere with the programmer/debugger communications to the device. If such discrete components are an application requirement, they should be removed from the circuit during programming and debugging. Alternatively, refer to the AC/DC characteristics and timing requirements information in the *"dsPIC33F/PIC24H Flash Programming Specification"* (DS70152) for information on capacitive loading limits and pin input voltage high (V_{IH}) and input low (V_{IL}) requirements.

Ensure that the "Communication Channel Select" (i.e., PGECx/PGEDx pins) programmed into the device matches the physical connections for the ICSP to MPLAB® ICD 3 or MPLAB REAL ICE™.

For more information on ICD 3 and REAL ICE connection requirements, refer to the following documents that are available on the Microchip web site.

- *"Using MPLAB® ICD 3 In-Circuit Debugger"* (poster) DS51765
- *"MPLAB® ICD 3 Design Advisory"* DS51764
- *"MPLAB® REAL ICE™ In-Circuit Emulator User's Guide"* DS51616
- *"Using MPLAB® REAL ICE™"* (poster) DS51749

2.6 External Oscillator Pins

Many DSCs have options for at least two oscillators: a high-frequency primary oscillator and a low-frequency secondary oscillator (refer to **Section 9.0 "Oscillator Configuration"** for details).

The oscillator circuit should be placed on the same side of the board as the device. Also, place the oscillator circuit close to the respective oscillator pins, not exceeding one-half inch (12 mm) distance between them. The load capacitors should be placed next to the oscillator itself, on the same side of the board. Use a grounded copper pour around the oscillator circuit to isolate them from surrounding circuits. The grounded copper pour should be routed directly to the MCU ground. Do not run any signal traces or power traces inside the ground pour. Also, if using a two-sided board, avoid any traces on the other side of the board where the crystal is placed. A suggested layout is shown in Figure 2-3.

FIGURE 2-3: SUGGESTED PLACEMENT OF THE OSCILLATOR CIRCUIT

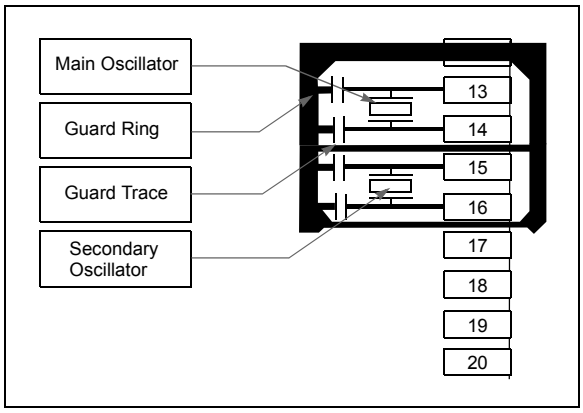

2.7 Oscillator Value Conditions on Device Start-up

If the PLL of the target device is enabled and configured for the device start-up oscillator, the maximum oscillator source frequency must be limited to ≤ 8 MHz for start-up with PLL enabled to comply with device PLL start-up conditions. This means that if the external oscillator frequency is outside this range, the application must start-up in the FRC mode first. The default PLL settings after a POR with an oscillator frequency outside this range will violate the device operating speed.

Once the device powers up, the application firmware can initialize the PLL SFRs, CLKDIV and PLLDBF to a suitable value, and then perform a clock switch to the Oscillator + PLL clock source. Note that clock switching must be enabled in the device Configuration word.

2.8 Configuration of Analog and Digital Pins During ICSP Operations

If MPLAB ICD 3 or REAL ICE is selected as a debugger, it automatically initializes all of the A/D input pins (ANx) as “digital” pins, by setting all bits in the ADPCFG and ADPCFG2 registers.

The bits in the registers that correspond to the A/D pins that are initialized by ICD 3 or REAL ICE, must not be cleared by the user application firmware; otherwise, communication errors will result between the debugger and the device.

If your application needs to use certain A/D pins as analog input pins during the debug session, the user application must clear the corresponding bits in the ADPCFG and ADPCFG2 registers during initialization of the ADC module.

When ICD 3 or REAL ICE is used as a programmer, the user application firmware must correctly configure the ADPCFG and ADPCFG2 registers. Automatic initialization of these registers is only done during debugger operation. Failure to correctly configure the register(s) will result in all A/D pins being recognized as analog input pins, resulting in the port value being read as a logic ‘0’, which may affect user application functionality.

2.9 Unused I/Os

Unused I/O pins should be configured as outputs and driven to a logic-low state.

Alternatively, connect a 1k to 10k resistor between V_{SS} and the unused pins.

© 2009-2012 Microchip Technology Inc.

3.0 CPU

Note 1: This data sheet summarizes the features of the dsPIC33FJXXXGPX06A/X08A/X10A family of devices. However, it is not intended to be a comprehensive reference source. To complement the information in this data sheet, refer to **Section 2. "CPU"** (DS70204) in the *"dsPIC33F/PIC24H Family Reference Manual"*, which is available from the Microchip web site (www.microchip.com).

2: Some registers and associated bits described in this section may not be available on all devices. Refer to **Section 4.0 "Memory Organization"** in this data sheet for device-specific register and bit information.

The dsPIC33FJXXXGPX06A/X08A/X10A CPU module has a 16-bit (data) modified Harvard architecture with an enhanced instruction set, including significant support for DSP. The CPU has a 24-bit instruction word with a variable length opcode field. The Program Counter (PC) is 23 bits wide and addresses up to 4M x 24 bits of user program memory space. The actual amount of program memory implemented varies by device. A single-cycle instruction prefetch mechanism is used to help maintain throughput and provides predictable execution. All instructions execute in a single cycle, with the exception of instructions that change the program flow, the double word move (`MOV.D`) instruction and the table instructions. Overhead-free program loop constructs are supported using the `DO` and `REPEAT` instructions, both of which are interruptible at any point.

The dsPIC33FJXXXGPX06A/X08A/X10A devices have sixteen, 16-bit working registers in the programmer's model. Each of the working registers can serve as a data, address or address offset register. The 16th working register (W15) operates as a software Stack Pointer (SP) for interrupts and calls.

The dsPIC33FJXXXGPX06A/X08A/X10A instruction set has two classes of instructions: MCU and DSP. These two instruction classes are seamlessly integrated into a single CPU. The instruction set includes many addressing modes and is designed for optimum C compiler efficiency. For most instructions, the dsPIC33FJXXXGPX06A/X08A/X10A is capable of executing a data (or program data) memory read, a working register (data) read, a data memory write and a program (instruction) memory read per instruction cycle. As a result, three parameter instructions can be supported, allowing A + B = C operations to be executed in a single cycle.

A block diagram of the CPU is shown in Figure 3-1. The programmer's model for the dsPIC33FJXXXGPX06A/X08A/X10A is shown in Figure 3-2.

3.1 Data Addressing Overview

The data space can be addressed as 32K words or 64 Kbytes and is split into two blocks, referred to as X and Y data memory. Each memory block has its own independent Address Generation Unit (AGU). The MCU class of instructions operates solely through the X memory AGU, which accesses the entire memory map as one linear data space. Certain DSP instructions operate through the X and Y AGUs to support dual operand reads, which splits the data address space into two parts. The X and Y data space boundary is device-specific.

Overhead-free circular buffers (Modulo Addressing mode) are supported in both X and Y address spaces. The Modulo Addressing removes the software boundary checking overhead for DSP algorithms. Furthermore, the X AGU circular addressing can be used with any of the MCU class of instructions. The X AGU also supports Bit-Reversed Addressing to greatly simplify input or output data reordering for radix-2 FFT algorithms.

The upper 32 Kbytes of the data space memory map can optionally be mapped into program space at any 16K program word boundary defined by the 8-bit Program Space Visibility Page (PSVPAG) register. The program to data space mapping feature lets any instruction access program space as if it were data space. The data space also includes 2 Kbytes of DMA RAM, which is primarily used for DMA data transfers, but may be used as general purpose RAM.

3.2 DSP Engine Overview

The DSP engine features a high-speed, 17-bit by 17-bit multiplier, a 40-bit ALU, two 40-bit saturating accumulators and a 40-bit bidirectional barrel shifter. The barrel shifter is capable of shifting a 40-bit value, up to 16 bits right or left, in a single cycle. The DSP instructions operate seamlessly with all other instructions and have been designed for optimal real-time performance. The `MAC` instruction and other associated instructions can concurrently fetch two data operands from memory while multiplying two W registers and accumulating and optionally saturating the result in the same cycle. This instruction functionality requires that the RAM memory data space be split for these instructions and linear for all others. Data space partitioning is achieved in a transparent and flexible manner through dedicating certain working registers to each address space.

3.3 Special MCU Features

The dsPIC33FJXXXGPX06A/X08A/X10A features a 17-bit by 17-bit, single-cycle multiplier that is shared by both the MCU ALU and DSP engine. The multiplier can perform signed, unsigned and mixed-sign multiplication. Using a 17-bit by 17-bit multiplier for 16-bit by 16-bit multiplication not only allows you to perform mixed-sign multiplication, it also achieves accurate results for special operations, such as (-1.0) x (-1.0).

The dsPIC33FJXXXGPX06A/X08A/X10A supports 16/16 and 32/16 divide operations, both fractional and integer. All divide instructions are iterative operations. They must be executed within a `REPEAT` loop, resulting in a total execution time of 19 instruction cycles. The divide operation can be interrupted during any of those 19 cycles without loss of data.

A 40-bit barrel shifter is used to perform up to a 16-bit, left or right shift in a single cycle. The barrel shifter can be used by both MCU and DSP instructions.

FIGURE 3-1: dsPIC33FJXXXGPX06A/X08A/X10A CPU CORE BLOCK DIAGRAM

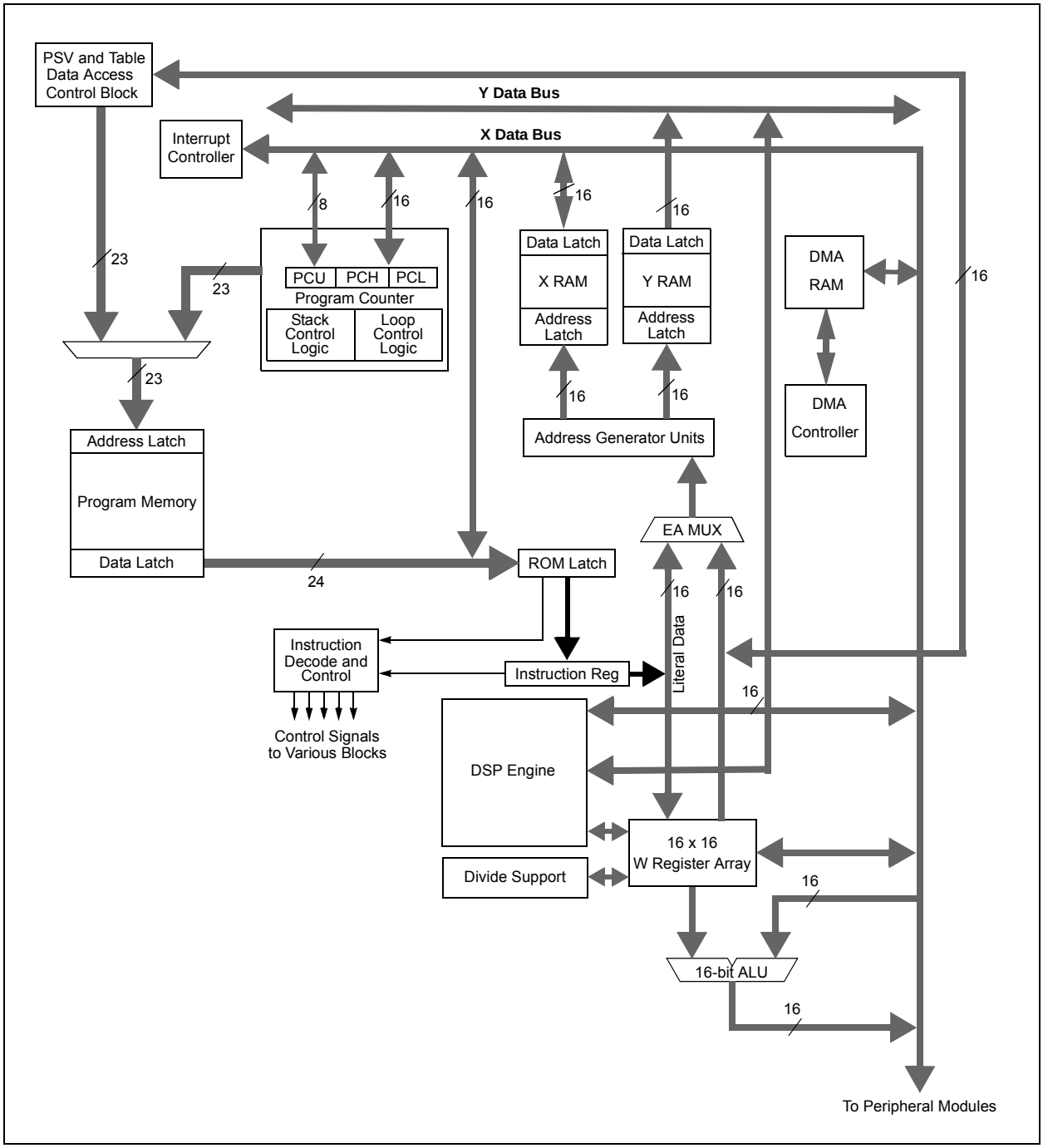

© 2009-2012 Microchip Technology Inc.

FIGURE 3-2: dsPIC33FJXXXGPX06A/X08A/X10A PROGRAMMER'S MODEL

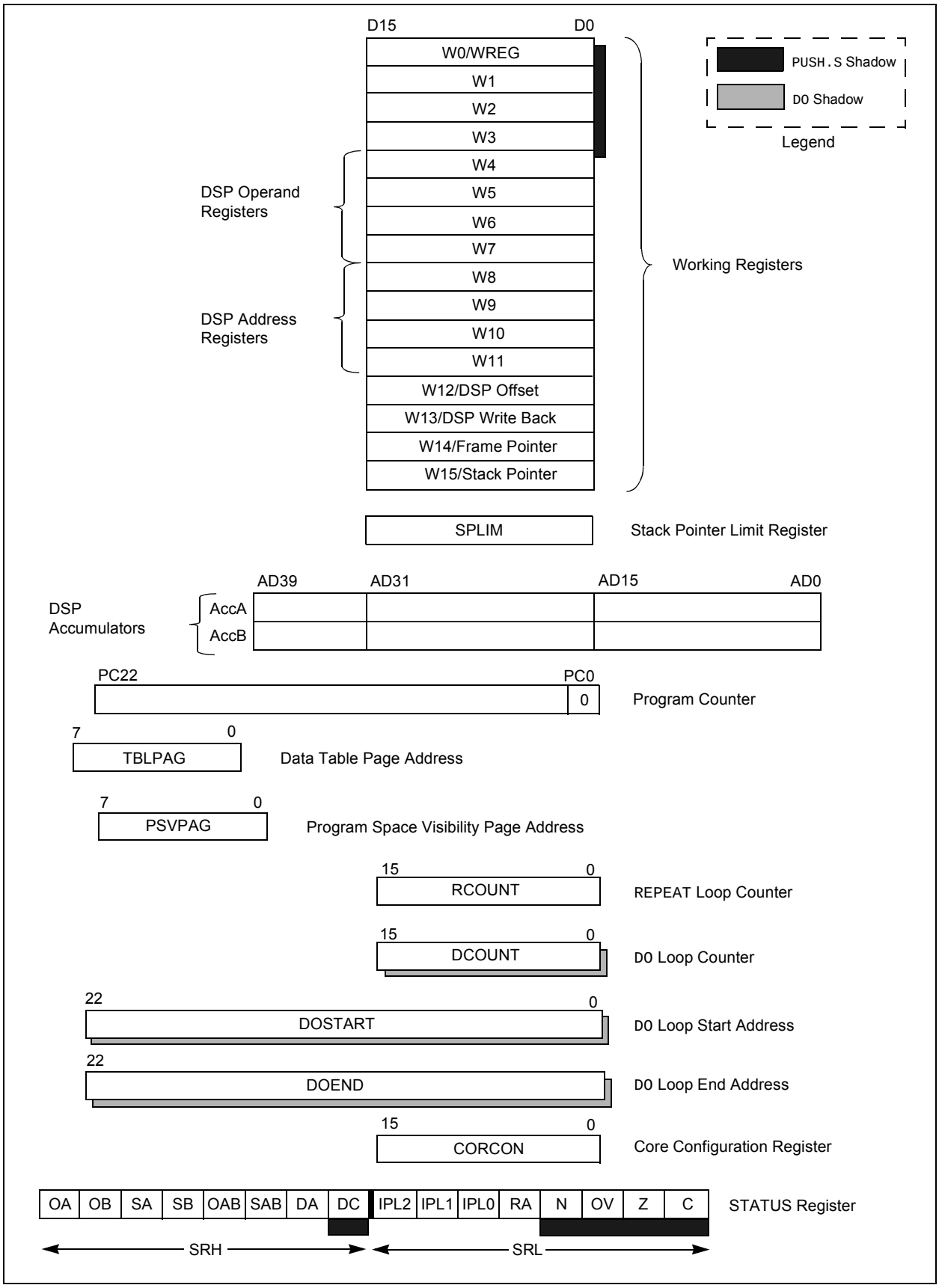

3.4 CPU Control Registers

CPU control registers include:

- **SR: CPU Status Register**
- **CORCON: Core Control Register**

REGISTER 3-1: SR: CPU STATUS REGISTER

R-0	R-0	R/C-0	R/C-0	R-0	R/C-0	R -0	R/W-0
OA	OB	SA(1)	SB(1)	OAB	SAB	DA	DC
bit 15							bit 8

R/W-0(2)	R/W-0(3)	R/W-0(3)	R-0	R/W-0	R/W-0	R/W-0	R/W-0
IPL<2:0>(2)			RA	N	OV	Z	C
bit 7							bit 0

Legend:		
C = Clear only bit	R = Readable bit	U = Unimplemented bit, read as ‘0’
S = Set only bit	W = Writable bit	-n = Value at POR
‘1’ = Bit is set	‘0’ = Bit is cleared	x = Bit is unknown

bit 15 **OA:** Accumulator A Overflow Status bit
1 = Accumulator A overflowed
0 = Accumulator A has not overflowed

bit 14 **OB:** Accumulator B Overflow Status bit
1 = Accumulator B overflowed
0 = Accumulator B has not overflowed

bit 13 **SA:** Accumulator A Saturation ‘Sticky’ Status bit(1)
1 = Accumulator A is saturated or has been saturated at some time
0 = Accumulator A is not saturated

bit 12 **SB:** Accumulator B Saturation ‘Sticky’ Status bit(1)
1 = Accumulator B is saturated or has been saturated at some time
0 = Accumulator B is not saturated

bit 11 **OAB:** OA || OB Combined Accumulator Overflow Status bit
1 = Accumulators A or B have overflowed
0 = Neither Accumulators A or B have overflowed

bit 10 **SAB:** SA || SB Combined Accumulator ‘Sticky’ Status bit
1 = Accumulators A or B are saturated or have been saturated at some time in the past
0 = Neither Accumulator A or B are saturated

Note: This bit may be read or cleared (not set). Clearing this bit will clear SA and SB.

bit 9 **DA:** DO Loop Active bit
1 = DO loop in progress
0 = DO loop not in progress

Note 1: This bit may be read or cleared (not set).
2: The IPL<2:0> bits are concatenated with the IPL<3> bit (CORCON<3>) to form the CPU Interrupt Priority Level. The value in parentheses indicates the IPL if IPL<3> = 1. User interrupts are disabled when IPL<3> = 1.
3: The IPL<2:0> Status bits are read only when NSTDIS = 1 (INTCON1<15>).

© 2009-2012 Microchip Technology Inc.

REGISTER 3-1: SR: CPU STATUS REGISTER

bit 8 **DC:** MCU ALU Half Carry/$\overline{\text{Borrow}}$ bit
1 = A carry-out from the 4th low-order bit (for byte sized data) or 8th low-order bit (for word sized data) of the result occurred
0 = No carry-out from the 4th low-order bit (for byte sized data) or 8th low-order bit (for word sized data) of the result occurred

bit 7-5 **IPL<2:0>:** CPU Interrupt Priority Level Status bits(2)
111 = CPU Interrupt Priority Level is 7 (15), user interrupts disabled
110 = CPU Interrupt Priority Level is 6 (14)
101 = CPU Interrupt Priority Level is 5 (13)
100 = CPU Interrupt Priority Level is 4 (12)
011 = CPU Interrupt Priority Level is 3 (11)
010 = CPU Interrupt Priority Level is 2 (10)
001 = CPU Interrupt Priority Level is 1 (9)
000 = CPU Interrupt Priority Level is 0 (8)

bit 4 **RA:** REPEAT Loop Active bit
1 = REPEAT loop in progress
0 = REPEAT loop not in progress

bit 3 **N:** MCU ALU Negative bit
1 = Result was negative
0 = Result was non-negative (zero or positive)

bit 2 **OV:** MCU ALU Overflow bit
This bit is used for signed arithmetic (2's complement). It indicates an overflow of the magnitude which causes the sign bit to change state.
1 = Overflow occurred for signed arithmetic (in this arithmetic operation)
0 = No overflow occurred

bit 1 **Z:** MCU ALU Zero bit
1 = An operation which affects the Z bit has set it at some time in the past
0 = The most recent operation which affects the Z bit has cleared it (i.e., a non-zero result)

bit 0 **C:** MCU ALU Carry/$\overline{\text{Borrow}}$ bit
1 = A carry-out from the Most Significant bit of the result occurred
0 = No carry-out from the Most Significant bit of the result occurred

Note 1: This bit may be read or cleared (not set).
2: The IPL<2:0> bits are concatenated with the IPL<3> bit (CORCON<3>) to form the CPU Interrupt Priority Level. The value in parentheses indicates the IPL if IPL<3> = 1. User interrupts are disabled when IPL<3> = 1.
3: The IPL<2:0> Status bits are read only when NSTDIS = 1 (INTCON1<15>).

REGISTER 3-2: CORCON: CORE CONTROL REGISTER

U-0	U-0	U-0	R/W-0	R/W-0	R-0	R-0	R-0
—	—	—	US	EDT(1)	DL<2:0>		
bit 15							bit 8

R/W-0	R/W-0	R/W-1	R/W-0	R/C-0	R/W-0	R/W-0	R/W-0
SATA	SATB	SATDW	ACCSAT	IPL3(2)	PSV	RND	IF
bit 7							bit 0

Legend:	C = Clear only bit		
R = Readable bit	W = Writable bit	-n = Value at POR	‘1’ = Bit is set
0’ = Bit is cleared	‘x = Bit is unknown	U = Unimplemented bit, read as ‘0’	

bit 15-13 **Unimplemented:** Read as ‘0’

bit 12 **US:** DSP Multiply Unsigned/Signed Control bit
1 = DSP engine multiplies are unsigned
0 = DSP engine multiplies are signed

bit 11 **EDT:** Early DO Loop Termination Control bit(1)
1 = Terminate executing DO loop at end of current loop iteration
0 = No effect

bit 10-8 **DL<2:0>:** DO Loop Nesting Level Status bits
111 = 7 DO loops active
.
.
.
001 = 1 DO loop active
000 = 0 DO loops active

bit 7 **SATA:** AccA Saturation Enable bit
1 = Accumulator A saturation enabled
0 = Accumulator A saturation disabled

bit 6 **SATB:** AccB Saturation Enable bit
1 = Accumulator B saturation enabled
0 = Accumulator B saturation disabled

bit 5 **SATDW:** Data Space Write from DSP Engine Saturation Enable bit
1 = Data space write saturation enabled
0 = Data space write saturation disabled

bit 4 **ACCSAT:** Accumulator Saturation Mode Select bit
1 = 9.31 saturation (super saturation)
0 = 1.31 saturation (normal saturation)

bit 3 **IPL3:** CPU Interrupt Priority Level Status bit 3(2)
1 = CPU interrupt priority level is greater than 7
0 = CPU interrupt priority level is 7 or less

bit 2 **PSV:** Program Space Visibility in Data Space Enable bit
1 = Program space visible in data space
0 = Program space not visible in data space

bit 1 **RND:** Rounding Mode Select bit
1 = Biased (conventional) rounding enabled
0 = Unbiased (convergent) rounding enabled

bit 0 **IF:** Integer or Fractional Multiplier Mode Select bit
1 = Integer mode enabled for DSP multiply ops
0 = Fractional mode enabled for DSP multiply ops

Note 1: This bit will always read as ‘0’.
2: The IPL3 bit is concatenated with the IPL<2:0> bits (SR<7:5>) to form the CPU interrupt priority level.

© 2009-2012 Microchip Technology Inc.

3.5 Arithmetic Logic Unit (ALU)

The dsPIC33FJXXXGPX06A/X08A/X10A ALU is 16 bits wide and is capable of addition, subtraction, bit shifts and logic operations. Unless otherwise mentioned, arithmetic operations are 2's complement in nature. Depending on the operation, the ALU may affect the values of the Carry (C), Zero (Z), Negative (N), Overflow (OV) and Digit Carry (DC) Status bits in the SR register. The C and DC Status bits operate as Borrow and Digit Borrow bits, respectively, for subtraction operations.

The ALU can perform 8-bit or 16-bit operations, depending on the mode of the instruction that is used. Data for the ALU operation can come from the W register array, or data memory, depending on the addressing mode of the instruction. Likewise, output data from the ALU can be written to the W register array or a data memory location.

Refer to the *"16-bit MCU and DSC Programmer's Reference Manual"* (DS70157) for information on the SR bits affected by each instruction.

The dsPIC33FJXXXGPX06A/X08A/X10A CPU incorporates hardware support for both multiplication and division. This includes a dedicated hardware multiplier and support hardware for 16-bit-divisor division.

3.5.1 MULTIPLIER

Using the high-speed 17-bit x 17-bit multiplier of the DSP engine, the ALU supports unsigned, signed or mixed-sign operation in several MCU multiplication modes:

- 16-bit x 16-bit signed
- 16-bit x 16-bit unsigned
- 16-bit signed x 5-bit (literal) unsigned
- 16-bit unsigned x 16-bit unsigned
- 16-bit unsigned x 5-bit (literal) unsigned
- 16-bit unsigned x 16-bit signed
- 8-bit unsigned x 8-bit unsigned

3.5.2 DIVIDER

The divide block supports 32-bit/16-bit and 16-bit/16-bit signed and unsigned integer divide operations with the following data sizes:

- 32-bit signed/16-bit signed divide
- 32-bit unsigned/16-bit unsigned divide
- 16-bit signed/16-bit signed divide
- 16-bit unsigned/16-bit unsigned divide

The quotient for all divide instructions ends up in W0 and the remainder in W1. 16-bit signed and unsigned `DIV` instructions can specify any W register for both the 16-bit divisor (Wn) and any W register (aligned) pair (W(m + 1):Wm) for the 32-bit dividend. The divide algorithm takes one cycle per bit of divisor, so both 32-bit/16-bit and 16-bit/16-bit instructions take the same number of cycles to execute.

3.6 DSP Engine

The DSP engine consists of a high-speed, 17-bit x 17-bit multiplier, a barrel shifter and a 40-bit adder/subtracter (with two target accumulators, round and saturation logic).

The dsPIC33FJXXXGPX06A/X08A/X10A is a single-cycle, instruction flow architecture; therefore, concurrent operation of the DSP engine with MCU instruction flow is not possible. However, some MCU ALU and DSP engine resources may be used concurrently by the same instruction (e.g., ED, EDAC).

The DSP engine also has the capability to perform inherent accumulator-to-accumulator operations which require no additional data. These instructions are `ADD`, `SUB` and `NEG`.

The DSP engine has various options selected through various bits in the CPU Core Control register (CORCON), as listed below:

- Fractional or integer DSP multiply (IF)
- Signed or unsigned DSP multiply (US)
- Conventional or convergent rounding (RND)
- Automatic saturation on/off for AccA (SATA)
- Automatic saturation on/off for AccB (SATB)
- Automatic saturation on/off for writes to data memory (SATDW)
- Accumulator Saturation mode selection (ACCSAT)

Table 3-1 provides a summary of DSP instructions. A block diagram of the DSP engine is shown in Figure 3-3.

TABLE 3-1: DSP INSTRUCTIONS SUMMARY

Instruction	Algebraic Operation	ACC Write Back
`CLR`	$A = 0$	Yes
`ED`	$A = (x - y)^2$	No
`EDAC`	$A = A + (x - y)^2$	No
`MAC`	$A = A + (x \bullet y)$	Yes
`MAC`	$A = A + x2$	No
`MOVSAC`	No change in A	Yes
`MPY`	$A = x \bullet y$	No
`MPY`	$A = x^2$	No
`MPY.N`	$A = -x \bullet y$	No
`MSC`	$A = A - x \bullet y$	Yes

FIGURE 3-3: DSP ENGINE BLOCK DIAGRAM

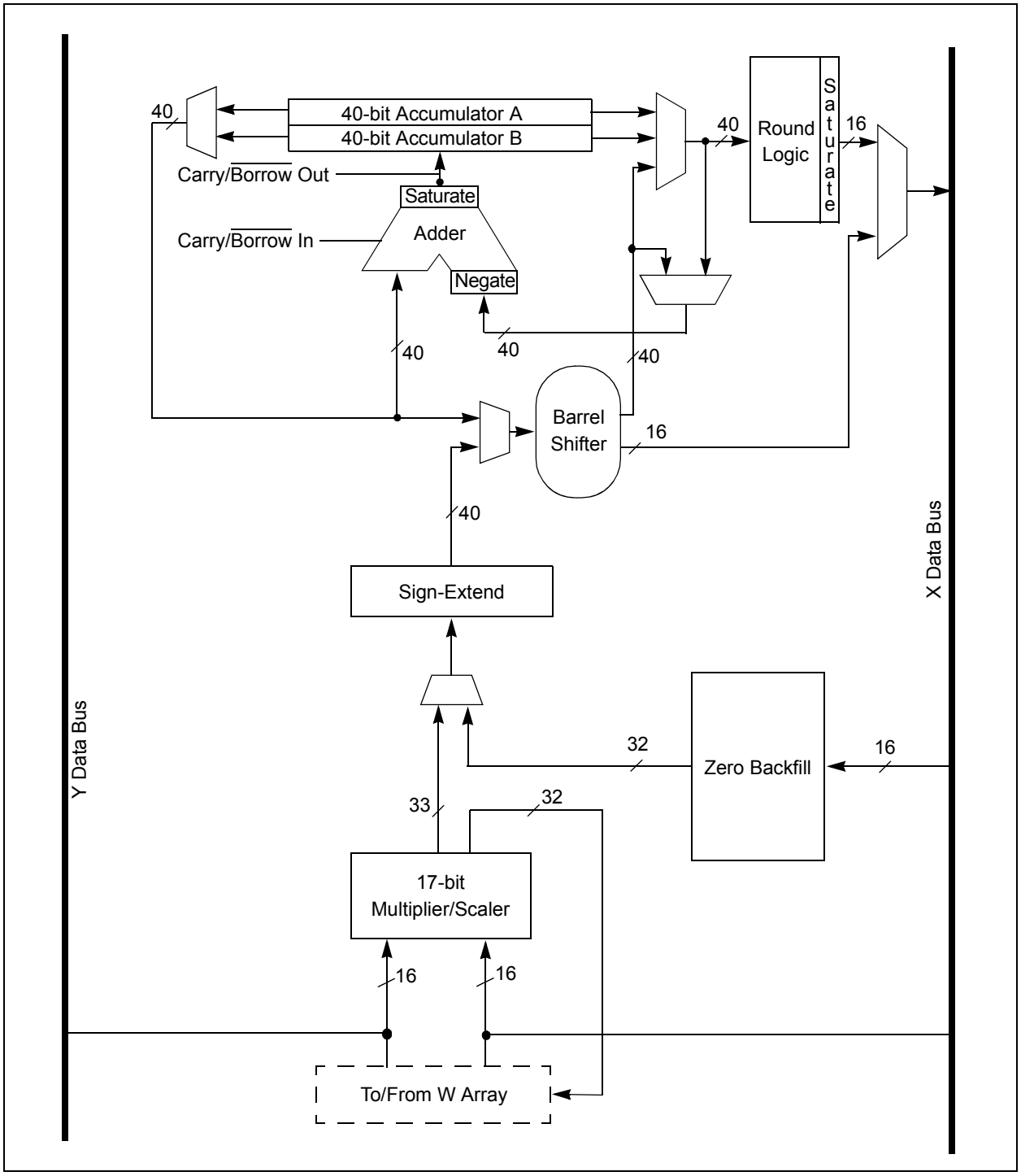

© 2009-2012 Microchip Technology Inc.

3.6.1 MULTIPLIER

The 17-bit x 17-bit multiplier is capable of signed or unsigned operation and can multiplex its output using a scaler to support either 1.31 fractional (Q31) or 32-bit integer results. Unsigned operands are zero-extended into the 17th bit of the multiplier input value. Signed operands are sign-extended into the 17th bit of the multiplier input value. The output of the 17-bit x 17-bit multiplier/scaler is a 33-bit value which is sign-extended to 40 bits. Integer data is inherently represented as a signed two's complement value, where the Most Significant bit (MSb) is defined as a sign bit. Generally speaking, the range of an N-bit two's complement integer is -2^{N-1} to $2^{N-1} - 1$. For a 16-bit integer, the data range is -32768 (0x8000) to 32767 (0x7FFF) including 0. For a 32-bit integer, the data range is -2,147,483,648 (0x8000 0000) to 2,147,483,647 (0x7FFF FFFF).

When the multiplier is configured for fractional multiplication, the data is represented as a two's complement fraction, where the MSb is defined as a sign bit and the radix point is implied to lie just after the sign bit (QX format). The range of an N-bit two's complement fraction with this implied radix point is -1.0 to $(1 - 2^{1-N})$. For a 16-bit fraction, the Q15 data range is -1.0 (0x8000) to 0.999969482 (0x7FFF) including 0 and has a precision of 3.01518×10^{-5}. In Fractional mode, the 16 x 16 multiply operation generates a 1.31 product which has a precision of 4.65661×10^{-10}.

The same multiplier is used to support the MCU multiply instructions which include integer 16-bit signed, unsigned and mixed sign multiplies.

The `MUL` instruction may be directed to use byte or word sized operands. Byte operands will direct a 16-bit result, and word operands will direct a 32-bit result to the specified register(s) in the W array.

3.6.2 DATA ACCUMULATORS AND ADDER/SUBTRACTER

The data accumulator consists of a 40-bit adder/subtracter with automatic sign extension logic. It can select one of two accumulators (A or B) as its pre-accumulation source and post-accumulation destination. For the `ADD` and `LAC` instructions, the data to be accumulated or loaded can be optionally scaled via the barrel shifter prior to accumulation.

3.6.2.1 Adder/Subtracter, Overflow and Saturation

The adder/subtracter is a 40-bit adder with an optional zero input into one side, and either true, or complement data into the other input. In the case of addition, the Carry/$\overline{\text{Borrow}}$ input is active-high and the other input is true data (not complemented), whereas in the case of subtraction, the Carry/$\overline{\text{Borrow}}$ input is active-low and the other input is complemented. The adder/subtracter generates Overflow Status bits, SA/SB and OA/OB, which are latched and reflected in the STATUS register:

- Overflow from bit 39: this is a catastrophic overflow in which the sign of the accumulator is destroyed.
- Overflow into guard bits 32 through 39: this is a recoverable overflow. This bit is set whenever all the guard bits are not identical to each other.

The adder has an additional saturation block which controls accumulator data saturation, if selected. It uses the result of the adder, the Overflow Status bits described above and the SAT<A:B> (CORCON<7:6>) and ACCSAT (CORCON<4>) mode control bits to determine when and to what value to saturate.

Six STATUS register bits have been provided to support saturation and overflow; they are:

- OA: AccA overflowed into guard bits
- OB: AccB overflowed into guard bits
- SA: AccA saturated (bit 31 overflow and saturation)
  or
  AccA overflowed into guard bits and saturated (bit 39 overflow and saturation)
- SB: AccB saturated (bit 31 overflow and saturation)
  or
  AccB overflowed into guard bits and saturated (bit 39 overflow and saturation)
- OAB: Logical OR of OA and OB
- SAB: Logical OR of SA and SB

The OA and OB bits are modified each time data passes through the adder/subtracter. When set, they indicate that the most recent operation has overflowed into the accumulator guard bits (bits 32 through 39). The OA and OB bits can also optionally generate an arithmetic warning trap when set and the corresponding Overflow Trap Flag Enable bits (OVATE, OVBTE) in the INTCON1 register (refer to **Section 7.0 "Interrupt Controller"**) are set. This allows the user to take immediate action, for example, to correct system gain.

The SA and SB bits are modified each time data passes through the adder/subtracter, but can only be cleared by the user. When set, they indicate that the accumulator has overflowed its maximum range (bit 31 for 32-bit saturation or bit 39 for 40-bit saturation) and will be saturated (if saturation is enabled). When saturation is not enabled, SA and SB default to bit 39 overflow and, thus, indicate that a catastrophic overflow has occurred. If the COVTE bit in the INTCON1 register is set, SA and SB bits will generate an arithmetic warning trap when saturation is disabled.

The Overflow and Saturation Status bits can optionally be viewed in the STATUS Register (SR) as the logical OR of OA and OB (in bit OAB) and the logical OR of SA and SB (in bit SAB). This allows programmers to check one bit in the STATUS register to determine if either accumulator has overflowed, or one bit to determine if either accumulator has saturated. This would be useful for complex number arithmetic which typically uses both the accumulators.

The device supports three Saturation and Overflow modes:

- Bit 39 Overflow and Saturation:
  When bit 39 overflow and saturation occurs, the saturation logic loads the maximally positive 9.31 (0x7FFFFFFFFF), or maximally negative 9.31 value (0x8000000000), into the target accumulator. The SA or SB bit is set and remains set until cleared by the user. This is referred to as ‘super saturation’ and provides protection against erroneous data or unexpected algorithm problems (e.g., gain calculations).
- Bit 31 Overflow and Saturation:
  When bit 31 overflow and saturation occurs, the saturation logic then loads the maximally positive 1.31 value (0x007FFFFFFF), or maximally negative 1.31 value (0x0080000000), into the target accumulator. The SA or SB bit is set and remains set until cleared by the user. When this Saturation mode is in effect, the guard bits are not used (so the OA, OB or OAB bits are never set).
- Bit 39 Catastrophic Overflow:
  The bit 39 Overflow Status bit from the adder is used to set the SA or SB bit, which remains set until cleared by the user. No saturation operation is performed and the accumulator is allowed to overflow (destroying its sign). If the COVTE bit in the INTCON1 register is set, a catastrophic overflow can initiate a trap exception.

3.6.2.2 Accumulator ‘Write Back’

The `MAC` class of instructions (with the exception of `MPY`, `MPY.N`, `ED` and `EDAC`) can optionally write a rounded version of the high word (bits 31 through 16) of the accumulator that is not targeted by the instruction into data space memory. The write is performed across the X bus into combined X and Y address space. The following addressing modes are supported:

- W13, Register Direct:
  The rounded contents of the non-target accumulator are written into W13 as a 1.15 fraction.
- [W13]+ = 2, Register Indirect with Post-Increment:
  The rounded contents of the non-target accumulator are written into the address pointed to by W13 as a 1.15 fraction. W13 is then incremented by 2 (for a word write).

3.6.2.3 Round Logic

The round logic is a combinational block which performs a conventional (biased) or convergent (unbiased) round function during an accumulator write (store). The Round mode is determined by the state of the RND bit in the CORCON register. It generates a 16-bit, 1.15 data value which is passed to the data space write saturation logic. If rounding is not indicated by the instruction, a truncated 1.15 data value is stored and the least significant word is simply discarded.

Conventional rounding zero-extends bit 15 of the accumulator and adds it to the ACCxH word (bits 16 through 31 of the accumulator). If the ACCxL word (bits 0 through 15 of the accumulator) is between 0x8000 and 0xFFFF (0x8000 included), ACCxH is incremented. If ACCxL is between 0x0000 and 0x7FFF, ACCxH is left unchanged. A consequence of this algorithm is that over a succession of random rounding operations, the value tends to be biased slightly positive.

Convergent (or unbiased) rounding operates in the same manner as conventional rounding, except when ACCxL equals 0x8000. In this case, the Least Significant bit (bit 16 of the accumulator) of ACCxH is examined. If it is ‘`1`’, ACCxH is incremented. If it is ‘`0`’, ACCxH is not modified. Assuming that bit 16 is effectively random in nature, this scheme removes any rounding bias that may accumulate.

The `SAC` and `SAC.R` instructions store either a truncated (`SAC`), or rounded (`SAC.R`) version of the contents of the target accumulator to data memory via the X bus, subject to data saturation (see **Section 3.6.2.4 “Data Space Write Saturation”**). For the `MAC` class of instructions, the accumulator write-back operation will function in the same manner, addressing combined MCU (X and Y) data space though the X bus. For this class of instructions, the data is always subject to rounding.

© 2009-2012 Microchip Technology Inc.

3.6.2.4 Data Space Write Saturation

In addition to adder/subtracter saturation, writes to data space can also be saturated but without affecting the contents of the source accumulator. The data space write saturation logic block accepts a 16-bit, 1.15 fractional value from the round logic block as its input, together with overflow status from the original source (accumulator) and the 16-bit round adder. These inputs are combined and used to select the appropriate 1.15 fractional value as output to write to data space memory.

If the SATDW bit in the CORCON register is set, data (after rounding or truncation) is tested for overflow and adjusted accordingly, For input data greater than 0x007FFF, data written to memory is forced to the maximum positive 1.15 value, 0x7FFF. For input data less than 0xFF8000, data written to memory is forced to the maximum negative 1.15 value, 0x8000. The Most Significant bit of the source (bit 39) is used to determine the sign of the operand being tested.

If the SATDW bit in the CORCON register is not set, the input data is always passed through unmodified under all conditions.

3.6.3 BARREL SHIFTER

The barrel shifter is capable of performing up to 16-bit arithmetic or logic right shifts, or up to 16-bit left shifts in a single cycle. The source can be either of the two DSP accumulators or the X bus (to support multi-bit shifts of register or memory data).

The shifter requires a signed binary value to determine both the magnitude (number of bits) and direction of the shift operation. A positive value shifts the operand right. A negative value shifts the operand left. A value of ‘0’ does not modify the operand.

The barrel shifter is 40 bits wide, thereby obtaining a 40-bit result for DSP shift operations and a 16-bit result for MCU shift operations. Data from the X bus is presented to the barrel shifter between bit positions 16 to 31 for right shifts, and between bit positions 0 to 16 for left shifts.

NOTES:

© 2009-2012 Microchip Technology Inc.

4.0 MEMORY ORGANIZATION

Note: This data sheet summarizes the features of the dsPIC33FJXXXGPX06A/X08A/X10A family of devices. However, it is not intended to be a comprehensive reference source. To complement the information in this data sheet, refer to **Section 3. "Data Memory"** (DS70202) and **Section 4. "Program Memory"** (DS70203) in the *"dsPIC33F/PIC24H Family Reference Manual"*, which are available from the Microchip web site (www.microchip.com).

The dsPIC33FJXXXGPX06A/X08A/X10A architecture features separate program and data memory spaces and buses. This architecture also allows the direct access of program memory from the data space during code execution.

4.1 Program Address Space

The program address memory space of the dsPIC33FJXXXGPX06A/X08A/X10A devices is 4M instructions. The space is addressable by a 24-bit value derived from either the 23-bit Program Counter (PC) during program execution, or from table operation or data space remapping as described in **Section 4.6 "Interfacing Program and Data Memory Spaces"**.

User access to the program memory space is restricted to the lower half of the address range (0x000000 to 0x7FFFFF). The exception is the use of `TBLRD/TBLWT` operations, which use TBLPAG<7> to permit access to the Configuration bits and Device ID sections of the configuration memory space. Memory usage for the dsPIC33FJXXXGPX06A/X08A/X10A of devices is shown in Figure 4-1.

FIGURE 4-1: PROGRAM MEMORY FOR dsPIC33FJXXXGPX06A/X08A/X10A DEVICES

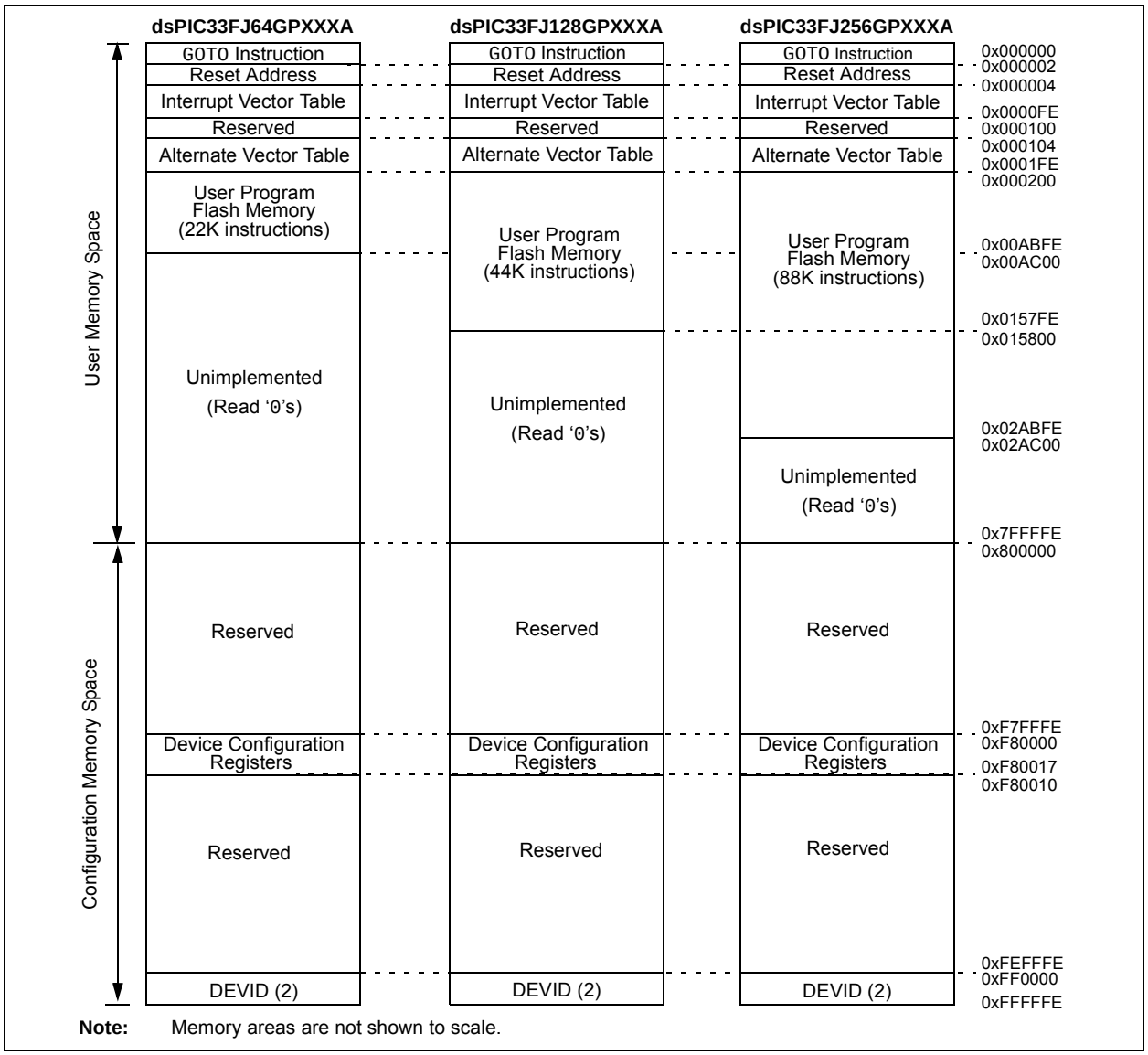

Note: Memory areas are not shown to scale.

4.1.1 PROGRAM MEMORY ORGANIZATION

The program memory space is organized in word-addressable blocks. Although it is treated as 24 bits wide, it is more appropriate to think of each address of the program memory as a lower and upper word, with the upper byte of the upper word being unimplemented. The lower word always has an even address, while the upper word has an odd address (Figure 4-2).

Program memory addresses are always word-aligned on the lower word, and addresses are incremented or decremented by two during code execution. This arrangement also provides compatibility with data memory space addressing and makes it possible to access data in the program memory space.

4.1.2 INTERRUPT AND TRAP VECTORS

All dsPIC33FJXXXGPX06A/X08A/X10A devices reserve the addresses between 0x00000 and 0x000200 for hard-coded program execution vectors. A hardware Reset vector is provided to redirect code execution from the default value of the PC on device Reset to the actual start of code. A `GOTO` instruction is programmed by the user at 0x000000, with the actual address for the start of code at 0x000002.

dsPIC33FJXXXGPX06A/X08A/X10A devices also have two interrupt vector tables, located from 0x000004 to 0x0000FF and 0x000100 to 0x0001FF. These vector tables allow each of the many device interrupt sources to be handled by separate Interrupt Service Routines (ISRs). A more detailed discussion of the interrupt vector tables is provided in **Section 7.1 "Interrupt Vector Table"**.

FIGURE 4-2: PROGRAM MEMORY ORGANIZATION

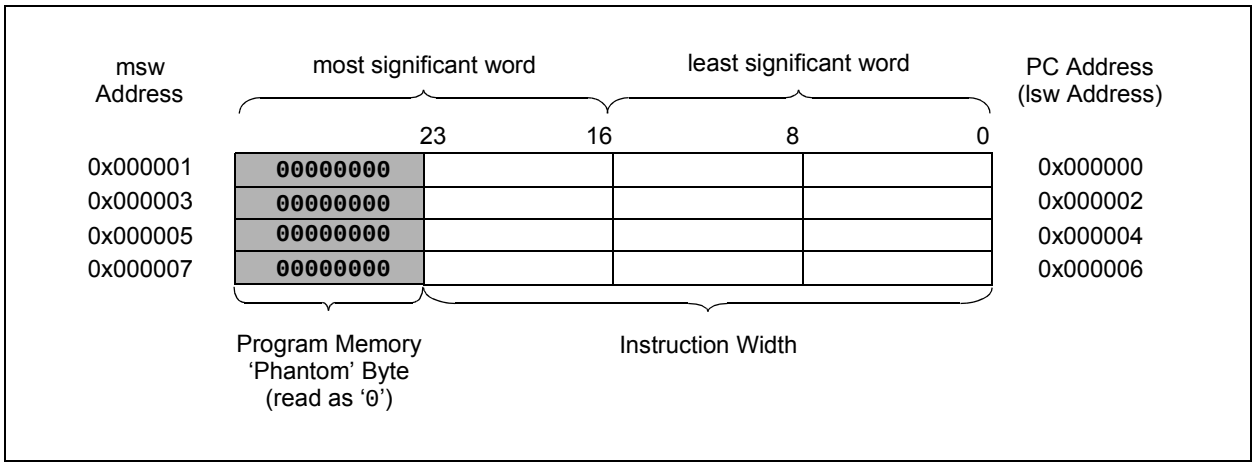

© 2009-2012 Microchip Technology Inc.

4.2 Data Address Space

The dsPIC33FJXXXGPX06A/X08A/X10A CPU has a separate 16-bit wide data memory space. The data space is accessed using separate Address Generation Units (AGUs) for read and write operations. Data memory maps of devices with different RAM sizes are shown in Figure 4-3 through Figure 4-5.

All Effective Addresses (EAs) in the data memory space are 16 bits wide and point to bytes within the data space. This arrangement gives a data space address range of 64 Kbytes or 32K words. The lower half of the data memory space (that is, when EA<15> = 0) is used for implemented memory addresses, while the upper half (EA<15> = 1) is reserved for the Program Space Visibility area (see **Section 4.6.3 "Reading Data from Program Memory Using Program Space Visibility"**).

dsPIC33FJXXXGPX06A/X08A/X10A devices implement a total of up to 30 Kbytes of data memory. Should an EA point to a location outside of this area, an all-zero word or byte will be returned.

4.2.1 DATA SPACE WIDTH

The data memory space is organized in byte addressable, 16-bit wide blocks. Data is aligned in data memory and registers as 16-bit words, but all data space EAs resolve to bytes. The Least Significant Bytes (LSBs) of each word have even addresses, while the Most Significant Bytes (MSBs) have odd addresses.

4.2.2 DATA MEMORY ORGANIZATION AND ALIGNMENT

To maintain backward compatibility with PIC® MCU devices and improve data space memory usage efficiency, the dsPIC33FJXXXGPX06A/X08A/X10A instruction set supports both word and byte operations. As a consequence of byte accessibility, all effective address calculations are internally scaled to step through word-aligned memory. For example, the core recognizes that Post-Modified Register Indirect Addressing mode [Ws++] will result in a value of Ws + 1 for byte operations and Ws + 2 for word operations.

Data byte reads will read the complete word that contains the byte, using the LSb of any EA to determine which byte to select. The selected byte is placed onto the LSb of the data path. That is, data memory and registers are organized as two parallel byte-wide entities with shared (word) address decode but separate write lines. Data byte writes only write to the corresponding side of the array or register which matches the byte address.

All word accesses must be aligned to an even address. Misaligned word data fetches are not supported, so care must be taken when mixing byte and word operations, or translating from 8-bit MCU code. If a misaligned read or write is attempted, an address error trap is generated. If the error occurred on a read, the instruction underway is completed; if it occurred on a write, the instruction will be executed but the write does not occur. In either case, a trap is then executed, allowing the system and/or user to examine the machine state prior to execution of the address Fault.

All byte loads into any W register are loaded into the Least Significant Byte. The Most Significant Byte is not modified.

A sign-extend instruction (SE) is provided to allow users to translate 8-bit signed data to 16-bit signed values. Alternatively, for 16-bit unsigned data, users can clear the MSb of any W register by executing a zero-extend (ZE) instruction on the appropriate address.

4.2.3 SFR SPACE

The first 2 Kbytes of the Near Data Space, from 0x0000 to 0x07FF, is primarily occupied by Special Function Registers (SFRs). These are used by the dsPIC33FJXXXGPX06A/X08A/X10A core and peripheral modules for controlling the operation of the device.

SFRs are distributed among the modules that they control, and are generally grouped together by module. Much of the SFR space contains unused addresses; these are read as '0'. A complete listing of implemented SFRs, including their addresses, is shown in Table 4-1 through Table 4-34.

Note:	The actual set of peripheral features and interrupts varies by the device. Please refer to the corresponding device tables and pinout diagrams for device-specific information.

4.2.4 NEAR DATA SPACE

The 8-Kbyte area between 0x0000 and 0x1FFF is referred to as the Near Data Space. Locations in this space are directly addressable via a 13-bit absolute address field within all memory direct instructions. Additionally, the whole data space is addressable using MOV instructions, which support Memory Direct Addressing mode with a 16-bit address field, or by using Indirect Addressing mode using a working register as an Address Pointer.

FIGURE 4-3: DATA MEMORY MAP FOR dsPIC33FJXXXGPX06A/X08A/X10A DEVICES WITH 8 KBS RAM

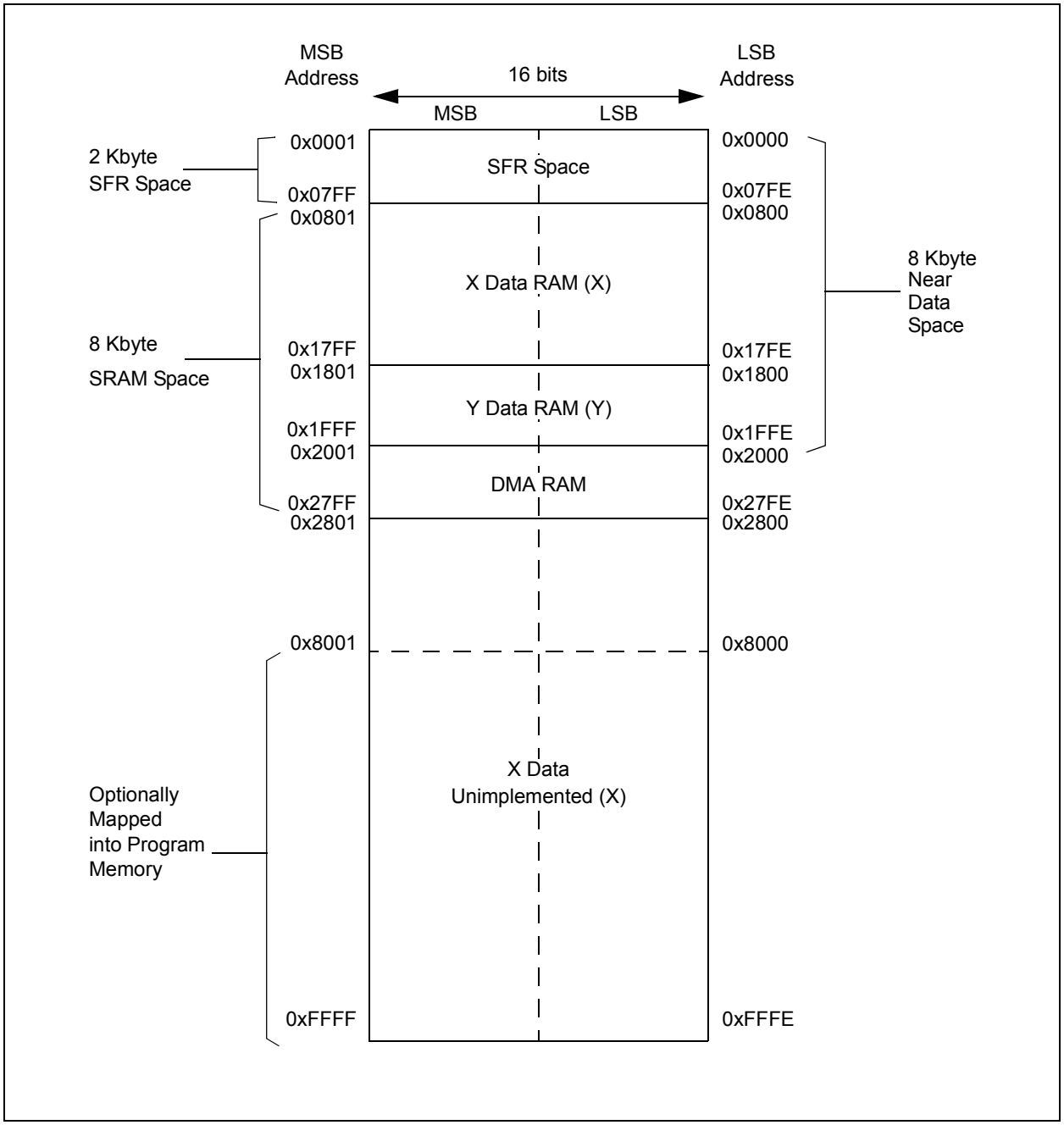

© 2009-2012 Microchip Technology Inc.

FIGURE 4-4: DATA MEMORY MAP FOR dsPIC33FJXXXGPX06A/X08A/X10A DEVICES WITH 16 KBS RAM

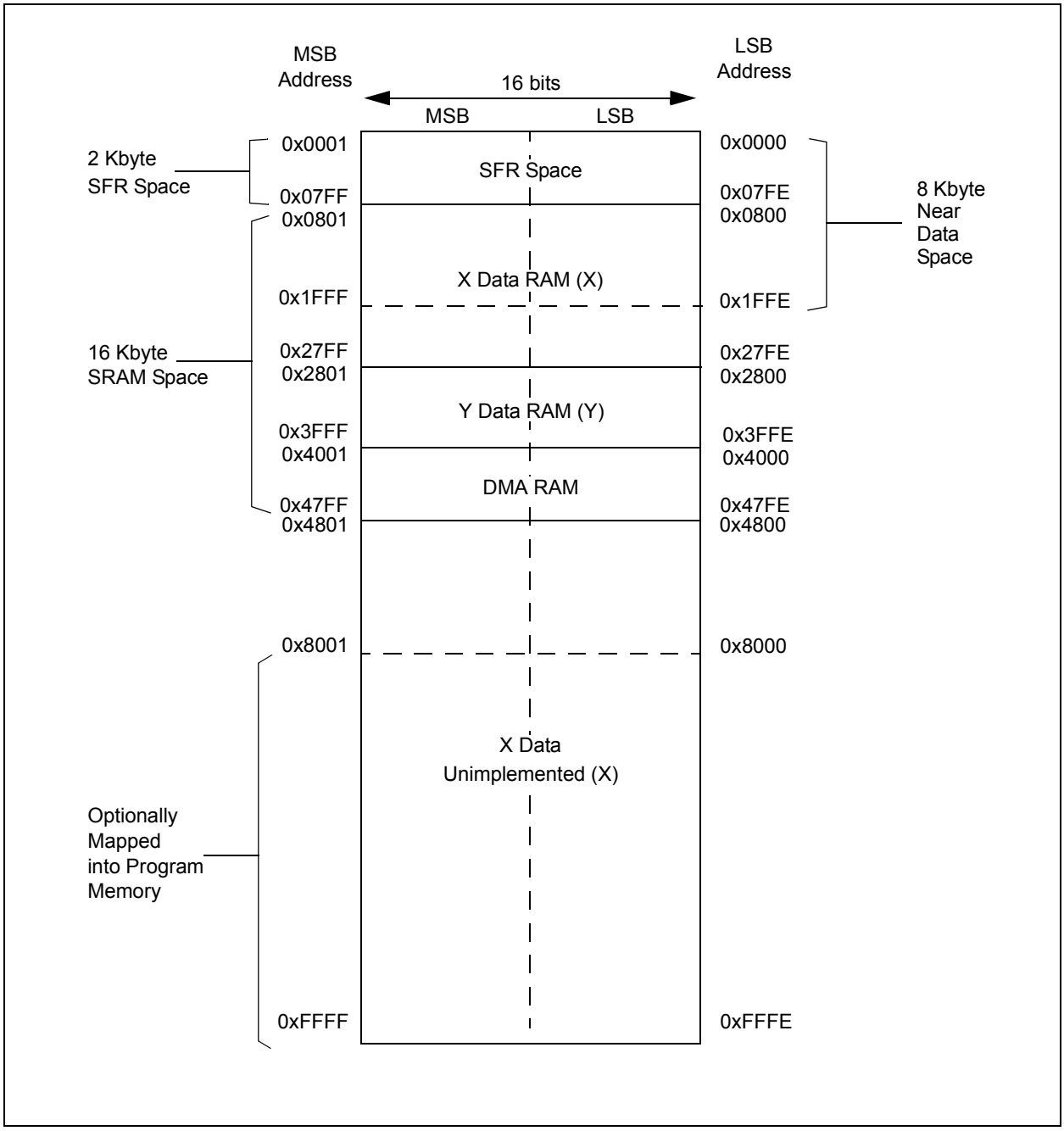

FIGURE 4-5: DATA MEMORY MAP FOR dsPIC33FJXXXGPX06A/X08A/X10A DEVICES WITH 30 KBS RAM

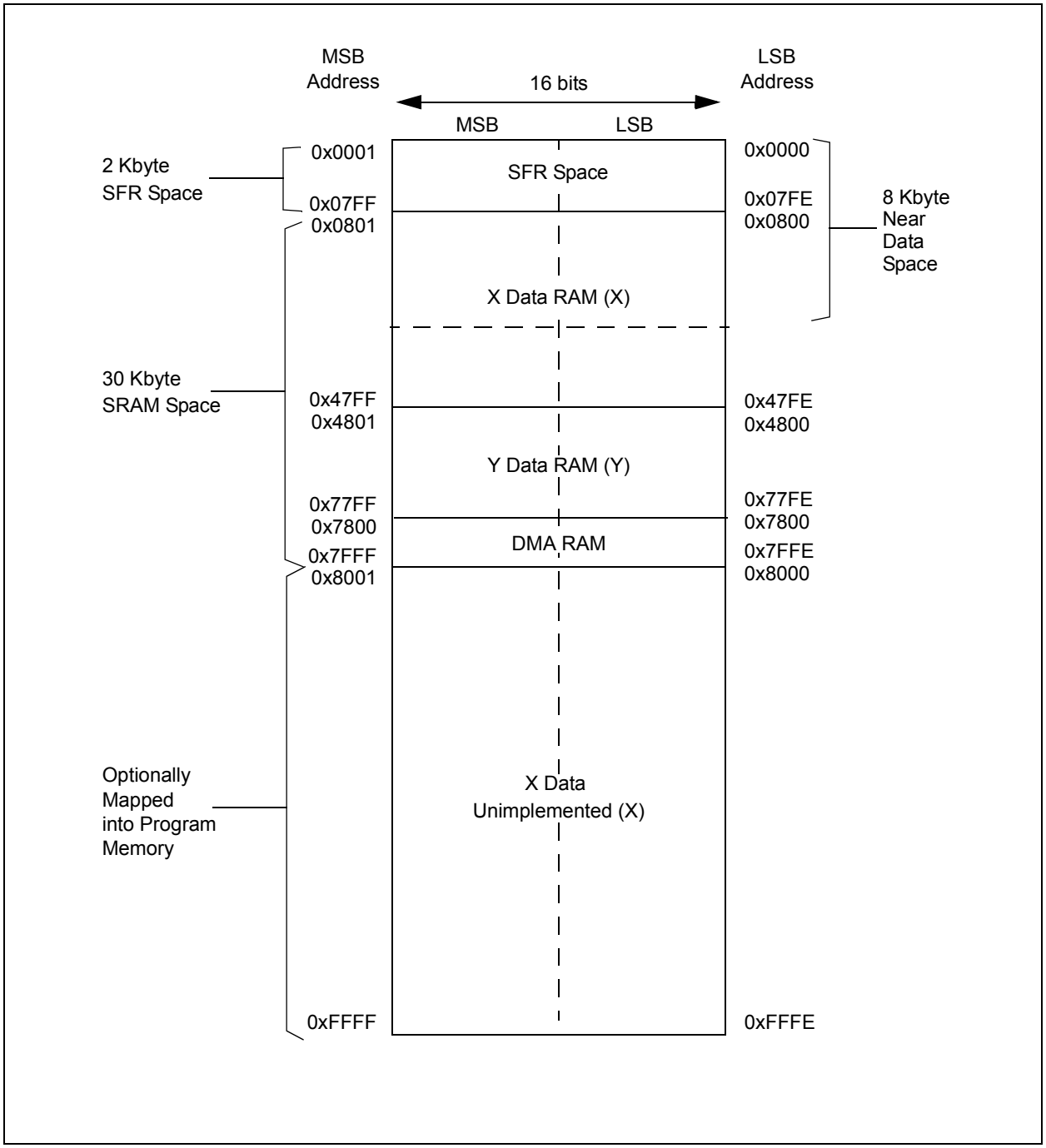

© 2009-2012 Microchip Technology Inc.

4.2.5 X AND Y DATA SPACES

The core has two data spaces, X and Y. These data spaces can be considered either separate (for some DSP instructions), or as one unified linear address range (for MCU instructions). The data spaces are accessed using two Address Generation Units (AGUs) and separate data paths. This feature allows certain instructions to concurrently fetch two words from RAM, thereby enabling efficient execution of DSP algorithms such as Finite Impulse Response (FIR) filtering and Fast Fourier Transform (FFT).

The X data space is used by all instructions and supports all addressing modes. There are separate read and write data buses for X data space. The X read data bus is the read data path for all instructions that view data space as combined X and Y address space. It is also the X data prefetch path for the dual operand DSP instructions (`MAC` class).

The Y data space is used in concert with the X data space by the `MAC` class of instructions (`CLR`, `ED`, `EDAC`, `MAC`, `MOVSAC`, `MPY`, `MPY.N` and `MSC`) to provide two concurrent data read paths.

Both the X and Y data spaces support Modulo Addressing mode for all instructions, subject to addressing mode restrictions. Bit-Reversed Addressing mode is only supported for writes to X data space.

All data memory writes, including in DSP instructions, view data space as combined X and Y address space. The boundary between the X and Y data spaces is device-dependent and is not user-programmable.

All effective addresses are 16 bits wide and point to bytes within the data space. Therefore, the data space address range is 64 Kbytes, or 32K words, though the implemented memory locations vary by device.

4.2.6 DMA RAM

Every dsPIC33FJXXXGPX06A/X08A/X10A device contains 2 Kbytes of dual ported DMA RAM located at the end of Y data space. Memory locations is part of Y data RAM and is in the DMA RAM space are accessible simultaneously by the CPU and the DMA controller module. DMA RAM is utilized by the DMA controller to store data to be transferred to various peripherals using DMA, as well as data transferred from various peripherals using DMA. The DMA RAM can be accessed by the DMA controller without having to steal cycles from the CPU.

When the CPU and the DMA controller attempt to concurrently write to the same DMA RAM location, the hardware ensures that the CPU is given precedence in accessing the DMA RAM location. Therefore, the DMA RAM provides a reliable means of transferring DMA data without ever having to stall the CPU.

Note:	DMA RAM can be used for general purpose data storage if the DMA function is not required in an application.

TABLE 4-1: CPU CORE REGISTERS MAP

SFR Name	SFR Addr	Bit 15	Bit 14	Bit 13	Bit 12	Bit 11	Bit 10	Bit 9	Bit 8	Bit 7	Bit 6	Bit 5	Bit 4	Bit 3	Bit 2	Bit 1	Bit 0	All Resets
WREG0	0000	Working Register 0																xxxx
WREG1	0002	Working Register 1																xxxx
WREG2	0004	Working Register 2																xxxx
WREG3	0006	Working Register 3																xxxx
WREG4	0008	Working Register 4																xxxx
WREG5	000A	Working Register 5																xxxx
WREG6	000C	Working Register 6																xxxx
WREG7	000E	Working Register 7																xxxx
WREG8	0010	Working Register 8																xxxx
WREG9	0012	Working Register 9																xxxx
WREG10	0014	Working Register 10																xxxx
WREG11	0016	Working Register 11																xxxx
WREG12	0018	Working Register 12																xxxx
WREG13	001A	Working Register 13																xxxx
WREG14	001C	Working Register 14																xxxx
WREG15	001E	Working Register 15																0800
SPLIM	0020	Stack Pointer Limit Register																xxxx
ACCAL	0022	Accumulator A Low Word Register																0000
ACCAH	0024	Accumulator A High Word Register																0000
ACCAU	0026	Accumulator A Upper Word Register																0000
ACCBL	0028	Accumulator B Low Word Register																0000
ACCBH	002A	Accumulator B High Word Register																0000
ACCBU	002C	Accumulator B Upper Word Register																0000
PCL	002E	Program Counter Low Word Register																0000
PCH	0030	—	—	—	—	—	—	—	—	Program Counter High Byte Register								0000
TBLPAG	0032	—	—	—	—	—	—	—	—	Table Page Address Pointer Register								0000
PSVPAG	0034	—	—	—	—	—	—	—	—	Program Memory Visibility Page Address Pointer Register								0000
RCOUNT	0036	Repeat Loop Counter Register																xxxx
DCOUNT	0038	DCOUNT<15:0>																xxxx
DOSTARTL	003A	DOSTARTL<15:1>															0	xxxx
DOSTARTH	003C	—	—	—	—	—	—	—	—	—	—	DOSTARTH<5:0>						00xx
DOENDL	003E	DOENDL<15:1>															0	xxxx
DOENDH	0040	—	—	—	—	—	—	—	—	—	—	DOENDH						00xx
SR	0042	OA	OB	SA	SB	OAB	SAB	DA	DC	IPL2	IPL1	IPL0	RA	N	OV	Z	C	0000
CORCON	0044	—	—	—	US	EDT	DL<2:0>			SATA	SATB	SATDW	ACCSAT	IPL3	PSV	RND	IF	0020
MODCON	0046	XMODEN	YMODEN	—	—	BWM<3:0>				YWM<3:0>				XWM<3:0>				0000
XMODSRT	0048	XS<15:1>															0	xxxx
XMODEND	004A	XE<15:1>															1	xxxx
YMODSRT	004C	YS<15:1>															0	xxxx
YMODEND	004E	YE<15:1>															1	xxxx

Legend: x = unknown value on Reset, — = unimplemented, read as '0'. Reset values are shown in hexadecimal.

© 2009-2012 Microchip Technology Inc.

TABLE 4-1: CPU CORE REGISTERS MAP (CONTINUED)

SFR Name	SFR Addr	Bit 15	Bit 14	Bit 13	Bit 12	Bit 11	Bit 10	Bit 9	Bit 8	Bit 7	Bit 6	Bit 5	Bit 4	Bit 3	Bit 2	Bit 1	Bit 0	All Resets
XBREV	0050	BREN	XB<14:0>															xxxx
DISICNT	0052	—	—	Disable Interrupts Counter Register														xxxx
BSRAM	0750	—	—	—	—	—	—	—	—	—	—	—	—	—	IW_BSR	IR_BSR	RL_BSR	0000
SSRAM	0752	—	—	—	—	—	—	—	—	—	—	—	—	—	IW_SSR	IR_SSR	RL_SSR	0000

Legend: x = unknown value on Reset, — = unimplemented, read as '0'. Reset values are shown in hexadecimal.

© 2009-2012 Microchip Technology Inc.

TABLE 4-2: CHANGE NOTIFICATION REGISTER MAP FOR dsPIC33FJXXXGPX10A DEVICES

SFR Name	SFR Addr	Bit 15	Bit 14	Bit 13	Bit 12	Bit 11	Bit 10	Bit 9	Bit 8	Bit 7	Bit 6	Bit 5	Bit 4	Bit 3	Bit 2	Bit 1	Bit 0	All Resets
CNEN1	0060	CN15IE	CN14IE	CN13IE	CN12IE	CN11IE	CN10IE	CN9IE	CN8IE	CN7IE	CN6IE	CN5IE	CN4IE	CN3IE	CN2IE	CN1IE	CN0IE	0000
CNEN2	0062	—	—	—	—	—	—	—	—	CN23IE	CN22IE	CN21IE	CN20IE	CN19IE	CN18IE	CN17IE	CN16IE	0000
CNPU1	0068	CN15PUE	CN14PUE	CN13PUE	CN12PUE	CN11PUE	CN10PUE	CN9PUE	CN8PUE	CN7PUE	CN6PUE	CN5PUE	CN4PUE	CN3PUE	CN2PUE	CN1PUE	CN0PUE	0000
CNPU2	006A	—	—	—	—	—	—	—	—	CN23PUE	CN22PUE	CN21PUE	CN20PUE	CN19PUE	CN18PUE	CN17PUE	CN16PUE	0000

Legend: x = unknown value on Reset, — = unimplemented, read as '0'. Reset values are shown in hexadecimal.

TABLE 4-3: CHANGE NOTIFICATION REGISTER MAP FOR dsPIC33FJXXXGPX08A DEVICES

SFR Name	SFR Addr	Bit 15	Bit 14	Bit 13	Bit 12	Bit 11	Bit 10	Bit 9	Bit 8	Bit 7	Bit 6	Bit 5	Bit 4	Bit 3	Bit 2	Bit 1	Bit 0	All Resets
CNEN1	0060	CN15IE	CN14IE	CN13IE	CN12IE	CN11IE	CN10IE	CN9IE	CN8IE	CN7IE	CN6IE	CN5IE	CN4IE	CN3IE	CN2IE	CN1IE	CN0IE	0000
CNEN2	0062	—	—	—	—	—	—	—	—	—	—	CN21IE	CN20IE	CN19IE	CN18IE	CN17IE	CN16IE	0000
CNPU1	0068	CN15PUE	CN14PUE	CN13PUE	CN12PUE	CN11PUE	CN10PUE	CN9PUE	CN8PUE	CN7PUE	CN6PUE	CN5PUE	CN4PUE	CN3PUE	CN2PUE	CN1PUE	CN0PUE	0000
CNPU2	006A	—	—	—	—	—	—	—	—	—	—	CN21PUE	CN20PUE	CN19PUE	CN18PUE	CN17PUE	CN16PUE	0000

Legend: x = unknown value on Reset, — = unimplemented, read as '0'. Reset values are shown in hexadecimal.

TABLE 4-4: CHANGE NOTIFICATION REGISTER MAP FOR dsPIC33FJXXXGPX06A DEVICES

SFR Name	SFR Addr	Bit 15	Bit 14	Bit 13	Bit 12	Bit 11	Bit 10	Bit 9	Bit 8	Bit 7	Bit 6	Bit 5	Bit 4	Bit 3	Bit 2	Bit 1	Bit 0	All Resets
CNEN1	0060	CN15IE	CN14IE	CN13IE	CN12IE	CN11IE	CN10IE	CN9IE	CN8IE	CN7IE	CN6IE	CN5IE	CN4IE	CN3IE	CN2IE	CN1IE	CN0IE	0000
CNEN2	0062	—	—	—	—	—	—	—	—	—	—	CN21IE	CN20IE	—	CN18IE	CN17IE	CN16IE	0000
CNPU1	0068	CN15PUE	CN14PUE	CN13PUE	CN12PUE	CN11PUE	CN10PUE	CN9PUE	CN8PUE	CN7PUE	CN6PUE	CN5PUE	CN4PUE	CN3PUE	CN2PUE	CN1PUE	CN0PUE	0000
CNPU2	006A	—	—	—	—	—	—	—	—	—	—	CN21PUE	CN20PUE	—	CN18PUE	CN17PUE	CN16PUE	0000

Legend: x = unknown value on Reset, — = unimplemented, read as '0'. Reset values are shown in hexadecimal.

© 2009-2012 Microchip Technology Inc.

TABLE 4-5: INTERRUPT CONTROLLER REGISTER MAP

SFR Name	SFR Addr	Bit 15	Bit 14	Bit 13	Bit 12	Bit 11	Bit 10	Bit 9	Bit 8	Bit 7	Bit 6	Bit 5	Bit 4	Bit 3	Bit 2	Bit 1	Bit 0	All Resets
INTCON1	0080	NSTDIS	OVAERR	OVBERR	COVAERR	COVBERR	OVATE	OVBTE	COVTE	SFTACERR	DIV0ERR	DMACERR	MATHERR	ADDRERR	STKERR	OSCFAIL	—	0000
INTCON2	0082	ALTIVT	DISI	—	—	—	—	—	—	—	—	—	INT4EP	INT3EP	INT2EP	INT1EP	INT0EP	0000
IFS0	0084	—	DMA1IF	AD1IF	U1TXIF	U1RXIF	SPI1IF	SPI1EIF	T3IF	T2IF	OC2IF	IC2IF	DMA0IF	T1IF	OC1IF	IC1IF	INT0IF	0000
IFS1	0086	U2TXIF	U2RXIF	INT2IF	T5IF	T4IF	OC4IF	OC3IF	DMA2IF	IC8IF	IC7IF	AD2IF	INT1IF	CNIF	—	MI2C1IF	SI2C1IF	0000
IFS2	0088	T6IF	DMA4IF	—	OC8IF	OC7IF	OC6IF	OC5IF	IC6IF	IC5IF	IC4IF	IC3IF	DMA3IF	C1IF	C1RXIF	SPI2IF	SPI2EIF	0000
IFS3	008A	—	—	DMA5IF	DCIIF	DCIEIF	—	—	C2IF	C2RXIF	INT4IF	INT3IF	T9IF	T8IF	MI2C2IF	SI2C2IF	T7IF	0000
IFS4	008C	—	—	—	—	—	—	—	—	C2TXIF	C1TXIF	DMA7IF	DMA6IF	—	U2EIF	U1EIF	—	0000
IEC0	0094	—	DMA1IE	AD1IE	U1TXIE	U1RXIE	SPI1IE	SPI1EIE	T3IE	T2IE	OC2IE	IC2IE	DMA0IE	T1IE	OC1IE	IC1IE	INT0IE	0000
IEC1	0096	U2TXIE	U2RXIE	INT2IE	T5IE	T4IE	OC4IE	OC3IE	DMA2IE	IC8IE	IC7IE	AD2IE	INT1IE	CNIE	—	MI2C1IE	SI2C1IE	0000
IEC2	0098	T6IE	DMA4IE	—	OC8IE	OC7IE	OC6IE	OC5IE	IC6IE	IC5IE	IC4IE	IC3IE	DMA3IE	C1IE	C1RXIE	SPI2IE	SPI2EIE	0000
IEC3	009A	—	—	DMA5IE	DCIIE	DCIEIE	—	—	C2IE	C2RXIE	INT4IE	INT3IE	T9IE	T8IE	MI2C2IE	SI2C2IE	T7IE	0000
IEC4	009C	—	—	—	—	—	—	—	—	C2TXIE	C1TXIE	DMA7IE	DMA6IE	—	U2EIE	U1EIE	—	0000
IPC0	00A4	—	T1IP<2:0>			—	OC1IP<2:0>			—	IC1IP<2:0>			—	INT0IP<2:0>			4444
IPC1	00A6	—	T2IP<2:0>			—	OC2IP<2:0>			—	IC2IP<2:0>			—	DMA0IP<2:0>			4444
IPC2	00A8	—	U1RXIP<2:0>			—	SPI1IP<2:0>			—	SPI1EIP<2:0>			—	T3IP<2:0>			4444
IPC3	00AA	—	—	—	—	—	DMA1IP<2:0>			—	AD1IP<2:0>			—	U1TXIP<2:0>			0444
IPC4	00AC	—	CNIP<2:0>			—	—	—	—	—	MI2C1IP<2:0>			—	SI2C1IP<2:0>			4044
IPC5	00AE	—	IC8IP<2:0>			—	IC7IP<2:0>			—	AD2IP<2:0>			—	INT1IP<2:0>			4444
IPC6	00B0	—	T4IP<2:0>			—	OC4IP<2:0>			—	OC3IP<2:0>			—	DMA2IP<2:0>			4444
IPC7	00B2	—	U2TXIP<2:0>			—	U2RXIP<2:0>			—	INT2IP<2:0>			—	T5IP<2:0>			4444
IPC8	00B4	—	C1IP<2:0>			—	C1RXIP<2:0>			—	SPI2IP<2:0>			—	SPI2EIP<2:0>			4444
IPC9	00B6	—	IC5IP<2:0>			—	IC4IP<2:0>			—	IC3IP<2:0>			—	DMA3IP<2:0>			4444
IPC10	00B8	—	OC7IP<2:0>			—	OC6IP<2:0>			—	OC5IP<2:0>			—	IC6IP<2:0>			4444
IPC11	00BA	—	T6IP<2:0>			—	DMA4IP<2:0>			—	—	—	—	—	OC8IP<2:0>			4404
IPC12	00BC	—	T8IP<2:0>			—	MI2C2IP<2:0>			—	SI2C2IP<2:0>			—	T7IP<2:0>			4444
IPC13	00BE	—	C2RXIP<2:0>			—	INT4IP<2:0>			—	INT3IP<2:0>			—	T9IP<2:0>			4444
IPC14	00C0	—	DCIEIP<2:0>			—	—	—	—	—	—	—	—	—	C2IP<2:0>			4004
IPC15	00C2	—	—	—	—	—	—	—	—	—	DMA5IP<2:0>			—	DCIIP<2:0>			0044
IPC16	00C4	—	—	—	—	—	U2EIP<2:0>			—	U1EIP<2:0>			—	—	—	—	0440
IPC17	00C6	—	C2TXIP<2:0>			—	C1TXIP<2:0>			—	DMA7IP<2:0>			—	DMA6IP<2:0>			4444
INTTREG	00E0	—	—	—	—	ILR<3:0>				—	VECNUM<6:0>							0000

Legend: x = unknown value on Reset, — = unimplemented, read as '0'. Reset values are shown in hexadecimal.

© 2009-2012 Microchip Technology Inc.

TABLE 4-6: TIMER REGISTER MAP

SFR Name	SFR Addr	Bit 15	Bit 14	Bit 13	Bit 12	Bit 11	Bit 10	Bit 9	Bit 8	Bit 7	Bit 6	Bit 5	Bit 4	Bit 3	Bit 2	Bit 1	Bit 0	All Resets
TMR1	0100	Timer1 Register																0000
PR1	0102	Period Register 1																FFFF
T1CON	0104	TON	—	TSIDL	—	—	—	—	—	—	TGATE	TCKPS<1:0>		—	TSYNC	TCS	—	0000
TMR2	0106	Timer2 Register																0000
TMR3HLD	0108	Timer3 Holding Register (for 32-bit timer operations only)																xxxx
TMR3	010A	Timer3 Register																0000
PR2	010C	Period Register 2																FFFF
PR3	010E	Period Register 3																FFFF
T2CON	0110	TON	—	TSIDL	—	—	—	—	—	—	TGATE	TCKPS<1:0>		T32	—	TCS	—	0000
T3CON	0112	TON	—	TSIDL	—	—	—	—	—	—	TGATE	TCKPS<1:0>		—	—	TCS	—	0000
TMR4	0114	Timer4 Register																0000
TMR5HLD	0116	Timer5 Holding Register (for 32-bit operations only)																xxxx
TMR5	0118	Timer5 Register																0000
PR4	011A	Period Register 4																FFFF
PR5	011C	Period Register 5																FFFF
T4CON	011E	TON	—	TSIDL	—	—	—	—	—	—	TGATE	TCKPS<1:0>		T32	—	TCS	—	0000
T5CON	0120	TON	—	TSIDL	—	—	—	—	—	—	TGATE	TCKPS<1:0>		—	—	TCS	—	0000
TMR6	0122	Timer6 Register																0000
TMR7HLD	0124	Timer7 Holding Register (for 32-bit operations only)																xxxx
TMR7	0126	Timer7 Register																0000
PR6	0128	Period Register 6																FFFF
PR7	012A	Period Register 7																FFFF
T6CON	012C	TON	—	TSIDL	—	—	—	—	—	—	TGATE	TCKPS<1:0>		T32	—	TCS	—	0000
T7CON	012E	TON	—	TSIDL	—	—	—	—	—	—	TGATE	TCKPS<1:0>		—	—	TCS	—	0000
TMR8	0130	Timer8 Register																0000
TMR9HLD	0132	Timer9 Holding Register (for 32-bit operations only)																xxxx
TMR9	0134	Timer9 Register																0000
PR8	0136	Period Register 8																FFFF
PR9	0138	Period Register 9																FFFF
T8CON	013A	TON	—	TSIDL	—	—	—	—	—	—	TGATE	TCKPS<1:0>		T32	—	TCS	—	0000
T9CON	013C	TON	—	TSIDL	—	—	—	—	—	—	TGATE	TCKPS<1:0>		—	—	TCS	—	0000

Legend: x = unknown value on Reset, — = unimplemented, read as '0'. Reset values are shown in hexadecimal.

© 2009-2012 Microchip Technology Inc.

TABLE 4-7: INPUT CAPTURE REGISTER MAP

SFR Name	SFR Addr	Bit 15	Bit 14	Bit 13	Bit 12	Bit 11	Bit 10	Bit 9	Bit 8	Bit 7	Bit 6	Bit 5	Bit 4	Bit 3	Bit 2	Bit 1	Bit 0	All Resets
IC1BUF	0140	Input 1 Capture Register																xxxx
IC1CON	0142	—	—	ICSIDL	—	—	—	—	—	ICTMR	ICI<1:0>		ICOV	ICBNE	ICM<2:0>			0000
IC2BUF	0144	Input 2 Capture Register																xxxx
IC2CON	0146	—	—	ICSIDL	—	—	—	—	—	ICTMR	ICI<1:0>		ICOV	ICBNE	ICM<2:0>			0000
IC3BUF	0148	Input 3 Capture Register																xxxx
IC3CON	014A	—	—	ICSIDL	—	—	—	—	—	ICTMR	ICI<1:0>		ICOV	ICBNE	ICM<2:0>			0000
IC4BUF	014C	Input 4 Capture Register																xxxx
IC4CON	014E	—	—	ICSIDL	—	—	—	—	—	ICTMR	ICI<1:0>		ICOV	ICBNE	ICM<2:0>			0000
IC5BUF	0150	Input 5 Capture Register																xxxx
IC5CON	0152	—	—	ICSIDL	—	—	—	—	—	ICTMR	ICI<1:0>		ICOV	ICBNE	ICM<2:0>			0000
IC6BUF	0154	Input 6 Capture Register																xxxx
IC6CON	0156	—	—	ICSIDL	—	—	—	—	—	ICTMR	ICI<1:0>		ICOV	ICBNE	ICM<2:0>			0000
IC7BUF	0158	Input 7 Capture Register																xxxx
IC7CON	015A	—	—	ICSIDL	—	—	—	—	—	ICTMR	ICI<1:0>		ICOV	ICBNE	ICM<2:0>			0000
IC8BUF	015C	Input 8 Capture Register																xxxx
IC8CON	015E	—	—	ICSIDL	—	—	—	—	—	ICTMR	ICI<1:0>		ICOV	ICBNE	ICM<2:0>			0000

Legend: x = unknown value on Reset, — = unimplemented, read as '0'. Reset values are shown in hexadecimal.

© 2009-2012 Microchip Technology Inc.

TABLE 4-8: OUTPUT COMPARE REGISTER MAP

SFR Name	SFR Addr	Bit 15	Bit 14	Bit 13	Bit 12	Bit 11	Bit 10	Bit 9	Bit 8	Bit 7	Bit 6	Bit 5	Bit 4	Bit 3	Bit 2	Bit 1	Bit 0	All Resets
OC1RS	0180	Output Compare 1 Secondary Register																xxxx
OC1R	0182	Output Compare 1 Register																xxxx
OC1CON	0184	—	—	OCSIDL	—	—	—	—	—	—	—	—	OCFLT	OCTSEL	OCM<2:0>			0000
OC2RS	0186	Output Compare 2 Secondary Register																xxxx
OC2R	0188	Output Compare 2 Register																xxxx
OC2CON	018A	—	—	OCSIDL	—	—	—	—	—	—	—	—	OCFLT	OCTSEL	OCM<2:0>			0000
OC3RS	018C	Output Compare 3 Secondary Register																xxxx
OC3R	018E	Output Compare 3 Register																xxxx
OC3CON	0190	—	—	OCSIDL	—	—	—	—	—	—	—	—	OCFLT	OCTSEL	OCM<2:0>			0000
OC4RS	0192	Output Compare 4 Secondary Register																xxxx
OC4R	0194	Output Compare 4 Register																xxxx
OC4CON	0196	—	—	OCSIDL	—	—	—	—	—	—	—	—	OCFLT	OCTSEL	OCM<2:0>			0000
OC5RS	0198	Output Compare 5 Secondary Register																xxxx
OC5R	019A	Output Compare 5 Register																xxxx
OC5CON	019C	—	—	OCSIDL	—	—	—	—	—	—	—	—	OCFLT	OCTSEL	OCM<2:0>			0000
OC6RS	019E	Output Compare 6 Secondary Register																xxxx
OC6R	01A0	Output Compare 6 Register																xxxx
OC6CON	01A2	—	—	OCSIDL	—	—	—	—	—	—	—	—	OCFLT	OCTSEL	OCM<2:0>			0000
OC7RS	01A4	Output Compare 7 Secondary Register																xxxx
OC7R	01A6	Output Compare 7 Register																xxxx
OC7CON	01A8	—	—	OCSIDL	—	—	—	—	—	—	—	—	OCFLT	OCTSEL	OCM<2:0>			0000
OC8RS	01AA	Output Compare 8 Secondary Register																xxxx
OC8R	01AC	Output Compare 8 Register																xxxx
OC8CON	01AE	—	—	OCSIDL	—	—	—	—	—	—	—	—	OCFLT	OCTSEL	OCM<2:0>			0000

Legend: x = unknown value on Reset, — = unimplemented, read as '0'. Reset values are shown in hexadecimal.

© 2009-2012 Microchip Technology Inc.

TABLE 4-9: I2C1 REGISTER MAP

SFR Name	SFR Addr	Bit 15	Bit 14	Bit 13	Bit 12	Bit 11	Bit 10	Bit 9	Bit 8	Bit 7	Bit 6	Bit 5	Bit 4	Bit 3	Bit 2	Bit 1	Bit 0	All Resets
I2C1RCV	0200	—	—	—	—	—	—	—	—	Receive Register								0000
I2C1TRN	0202	—	—	—	—	—	—	—	—	Transmit Register								00FF
I2C1BRG	0204	—	—	—	—	—	—	—	Baud Rate Generator Register									0000
I2C1CON	0206	I2CEN	—	I2CSIDL	SCLREL	IPMIEN	A10M	DISSLW	SMEN	GCEN	STREN	ACKDT	ACKEN	RCEN	PEN	RSEN	SEN	1000
I2C1STAT	0208	ACKSTAT	TRSTAT	—	—	—	BCL	GCSTAT	ADD10	IWCOL	I2COV	D_A	P	S	R_W	RBF	TBF	0000
I2C1ADD	020A	—	—	—	—	—	—	Address Register										0000
I2C1MSK	020C	—	—	—	—	—	—	Address Mask Register										0000

Legend: x = unknown value on Reset, — = unimplemented, read as '0'. Reset values are shown in hexadecimal.

TABLE 4-10: I2C2 REGISTER MAP

SFR Name	SFR Addr	Bit 15	Bit 14	Bit 13	Bit 12	Bit 11	Bit 10	Bit 9	Bit 8	Bit 7	Bit 6	Bit 5	Bit 4	Bit 3	Bit 2	Bit 1	Bit 0	All Resets
I2C2RCV	0210	—	—	—	—	—	—	—	—	Receive Register								0000
I2C2TRN	0212	—	—	—	—	—	—	—	—	Transmit Register								00FF
I2C2BRG	0214	—	—	—	—	—	—	—	Baud Rate Generator Register									0000
I2C2CON	0216	I2CEN	—	I2CSIDL	SCLREL	IPMIEN	A10M	DISSLW	SMEN	GCEN	STREN	ACKDT	ACKEN	RCEN	PEN	RSEN	SEN	1000
I2C2STAT	0218	ACKSTAT	TRSTAT	—	—	—	BCL	GCSTAT	ADD10	IWCOL	I2COV	D_A	P	S	R_W	RBF	TBF	0000
I2C2ADD	021A	—	—	—	—	—	—	Address Register										0000
I2C2MSK	021C	—	—	—	—	—	—	Address Mask Register										0000

Legend: x = unknown value on Reset, — = unimplemented, read as '0'. Reset values are shown in hexadecimal.

© 2009-2012 Microchip Technology Inc.

TABLE 4-11: UART1 REGISTER MAP

SFR Name	SFR Addr	Bit 15	Bit 14	Bit 13	Bit 12	Bit 11	Bit 10	Bit 9	Bit 8	Bit 7	Bit 6	Bit 5	Bit 4	Bit 3	Bit 2	Bit 1	Bit 0	All Resets
U1MODE	0220	UARTEN	—	USIDL	IREN	RTSMD	—	UEN1	UEN0	WAKE	LPBACK	ABAUD	URXINV	BRGH	PDSEL<1:0>		STSEL	0000
U1STA	0222	UTXISEL1	UTXINV	UTXISEL0	—	UTXBRK	UTXEN	UTXBF	TRMT	URXISEL<1:0>		ADDEN	RIDLE	PERR	FERR	OERR	URXDA	0110
U1TXREG	0224	—	—	—	—	—	—	—	UART Transmit Register									xxxx
U1RXREG	0226	—	—	—	—	—	—	—	UART Receive Register									0000
U1BRG	0228	Baud Rate Generator Prescaler																0000

Legend: x = unknown value on Reset, — = unimplemented, read as '0'. Reset values are shown in hexadecimal.

TABLE 4-12: UART2 REGISTER MAP

SFR Name	SFR Addr	Bit 15	Bit 14	Bit 13	Bit 12	Bit 11	Bit 10	Bit 9	Bit 8	Bit 7	Bit 6	Bit 5	Bit 4	Bit 3	Bit 2	Bit 1	Bit 0	All Resets
U2MODE	0230	UARTEN	—	USIDL	IREN	RTSMD	—	UEN1	UEN0	WAKE	LPBACK	ABAUD	URXINV	BRGH	PDSEL<1:0>		STSEL	0000
U2STA	0232	UTXISEL1	UTXINV	UTXISEL0	—	UTXBRK	UTXEN	UTXBF	TRMT	URXISEL<1:0>		ADDEN	RIDLE	PERR	FERR	OERR	URXDA	0110
U2TXREG	0234	—	—	—	—	—	—	—	UART Transmit Register									xxxx
U2RXREG	0236	—	—	—	—	—	—	—	UART Receive Register									0000
U2BRG	0238	Baud Rate Generator Prescaler																0000

Legend: x = unknown value on Reset, — = unimplemented, read as '0'. Reset values are shown in hexadecimal.

TABLE 4-13: SPI1 REGISTER MAP

SFR Name	SFR Addr	Bit 15	Bit 14	Bit 13	Bit 12	Bit 11	Bit 10	Bit 9	Bit 8	Bit 7	Bit 6	Bit 5	Bit 4	Bit 3	Bit 2	Bit 1	Bit 0	All Resets
SPI1STAT	0240	SPIEN	—	SPISIDL	—	—	—	—	—	—	SPIROV	—	—	—	—	SPITBF	SPIRBF	0000
SPI1CON1	0242	—	—	—	DISSCK	DISSDO	MODE16	SMP	CKE	SSEN	CKP	MSTEN	SPRE<2:0>			PPRE<1:0>		0000
SPI1CON2	0244	FRMEN	SPIFSD	FRMPOL	—	—	—	—	—	—	—	—	—	—	—	FRMDLY	—	0000
SPI1BUF	0248	SPI1 Transmit and Receive Buffer Register																0000

Legend: x = unknown value on Reset, — = unimplemented, read as '0'. Reset values are shown in hexadecimal.

TABLE 4-14: SPI2 REGISTER MAP

SFR Name	SFR Addr	Bit 15	Bit 14	Bit 13	Bit 12	Bit 11	Bit 10	Bit 9	Bit 8	Bit 7	Bit 6	Bit 5	Bit 4	Bit 3	Bit 2	Bit 1	Bit 0	All Resets
SPI2STAT	0260	SPIEN	—	SPISIDL	—	—	—	—	—	—	SPIROV	—	—	—	—	SPITBF	SPIRBF	0000
SPI2CON1	0262	—	—	—	DISSCK	DISSDO	MODE16	SMP	CKE	SSEN	CKP	MSTEN	SPRE<2:0>			PPRE<1:0>		0000
SPI2CON2	0264	FRMEN	SPIFSD	FRMPOL	—	—	—	—	—	—	—	—	—	—	—	FRMDLY	—	0000
SPI2BUF	0268	SPI2 Transmit and Receive Buffer Register																0000

Legend: x = unknown value on Reset, — = unimplemented, read as '0'. Reset values are shown in hexadecimal.

© 2009-2012 Microchip Technology Inc.

TABLE 4-15: ADC1 REGISTER MAP

File Name	Addr	Bit 15	Bit 14	Bit 13	Bit 12	Bit 11	Bit 10	Bit 9	Bit 8	Bit 7	Bit 6	Bit 5	Bit 4	Bit 3	Bit 2	Bit 1	Bit 0	All Resets
ADC1BUF0	0300	ADC Data Buffer 0																xxxx
AD1CON1	0320	ADON	—	ADSIDL	ADDMABM	—	AD12B	FORM<1:0>		SSRC<2:0>			—	SIMSAM	ASAM	SAMP	DONE	0000
AD1CON2	0322	VCFG<2:0>			—	—	CSCNA	CHPS<1:0>		BUFS	—	SMPI<3:0>				BUFM	ALTS	0000
AD1CON3	0324	ADRC	—	—	SAMC<4:0>					ADCS<7:0>								0000
AD1CHS123	0326	—	—	—	—	—	CH123NB<1:0>		CH123SB	—	—	—	—	—	CH123NA<1:0>		CH123SA	0000
AD1CHS0	0328	CH0NB	—	—	CH0SB<4:0>					CH0NA	—	—	CH0SA<4:0>					0000
AD1PCFGH(1)	032A	PCFG31	PCFG30	PCFG29	PCFG28	PCFG27	PCFG26	PCFG25	PCFG24	PCFG23	PCFG22	PCFG21	PCFG20	PCFG19	PCFG18	PCFG17	PCFG16	0000
AD1PCFGL	032C	PCFG15	PCFG14	PCFG13	PCFG12	PCFG11	PCFG10	PCFG9	PCFG8	PCFG7	PCFG6	PCFG5	PCFG4	PCFG3	PCFG2	PCFG1	PCFG0	0000
AD1CSSH(1)	032E	CSS31	CSS30	CSS29	CSS28	CSS27	CSS26	CSS25	CSS24	CSS23	CSS22	CSS21	CSS20	CSS19	CSS18	CSS17	CSS16	0000
AD1CSSL	0330	CSS15	CSS14	CSS13	CSS12	CSS11	CSS10	CSS9	CSS8	CSS7	CSS6	CSS5	CSS4	CSS3	CSS2	CSS1	CSS0	0000
AD1CON4	0332	—	—	—	—	—	—	—	—	—	—	—	—	—	DMABL<2:0>			0000

Legend: x = unknown value on Reset, — = unimplemented, read as '0'. Reset values are shown in hexadecimal.
Note 1: Not all ANx inputs are available on all devices. See the device pin diagrams for available ANx inputs.

TABLE 4-16: ADC2 REGISTER MAP

File Name	Addr	Bit 15	Bit 14	Bit 13	Bit 12	Bit 11	Bit 10	Bit 9	Bit 8	Bit 7	Bit 6	Bit 5	Bit 4	Bit 3	Bit 2	Bit 1	Bit 0	All Resets
ADC2BUF0	0340	ADC Data Buffer 0																xxxx
AD2CON1	0360	ADON	—	ADSIDL	ADDMABM	—	AD12B	FORM<1:0>		SSRC<2:0>			—	SIMSAM	ASAM	SAMP	DONE	0000
AD2CON2	0362	VCFG<2:0>			—	—	CSCNA	CHPS<1:0>		BUFS	—	SMPI<3:0>				BUFM	ALTS	0000
AD2CON3	0364	ADRC	—	—	SAMC<4:0>					ADCS<7:0>								0000
AD2CHS123	0366	—	—	—	—	—	CH123NB<1:0>		CH123SB	—	—	—	—	—	CH123NA<1:0>		CH123SA	0000
AD2CHS0	0368	CH0NB	—	—	—	CH0SB<3:0>				CH0NA	—	—	—	CH0SA<3:0>				0000
Reserved	036A	—	—	—	—	—	—	—	—	—	—	—	—	—	—	—	—	0000
AD2PCFGL	036C	PCFG15	PCFG14	PCFG13	PCFG12	PCFG11	PCFG10	PCFG9	PCFG8	PCFG7	PCFG6	PCFG5	PCFG4	PCFG3	PCFG2	PCFG1	PCFG0	0000
Reserved	036E	—	—	—	—	—	—	—	—	—	—	—	—	—	—	—	—	0000
AD2CSSL	0370	CSS15	CSS14	CSS13	CSS12	CSS11	CSS10	CSS9	CSS8	CSS7	CSS6	CSS5	CSS4	CSS3	CSS2	CSS1	CSS0	0000
AD2CON4	0372	—	—	—	—	—	—	—	—	—	—	—	—	—	DMABL<2:0>			0000

Legend: x = unknown value on Reset, — = unimplemented, read as '0'. Reset values are shown in hexadecimal.

© 2009-2012 Microchip Technology Inc.

TABLE 4-17: DMA REGISTER MAP

File Name	Addr	Bit 15	Bit 14	Bit 13	Bit 12	Bit 11	Bit 10	Bit 9	Bit 8	Bit 7	Bit 6	Bit 5	Bit 4	Bit 3	Bit 2	Bit 1	Bit 0	All Resets
DMA0CON	0380	CHEN	SIZE	DIR	HALF	NULLW	—	—	—	—	—	AMODE<1:0>		—	—	MODE<1:0>		0000
DMA0REQ	0382	FORCE	—	—	—	—	—	—	—	—	IRQSEL<6:0>							0000
DMA0STA	0384	STA<15:0>																0000
DMA0STB	0386	STB<15:0>																0000
DMA0PAD	0388	PAD<15:0>																0000
DMA0CNT	038A	—	—	—	—	—	—	CNT<9:0>										0000
DMA1CON	038C	CHEN	SIZE	DIR	HALF	NULLW	—	—	—	—	—	AMODE<1:0>		—	—	MODE<1:0>		0000
DMA1REQ	038E	FORCE	—	—	—	—	—	—	—	—	IRQSEL<6:0>							0000
DMA1STA	0390	STA<15:0>																0000
DMA1STB	0392	STB<15:0>																0000
DMA1PAD	0394	PAD<15:0>																0000
DMA1CNT	0396	—	—	—	—	—	—	CNT<9:0>										0000
DMA2CON	0398	CHEN	SIZE	DIR	HALF	NULLW	—	—	—	—	—	AMODE<1:0>		—	—	MODE<1:0>		0000
DMA2REQ	039A	FORCE	—	—	—	—	—	—	—	—	IRQSEL<6:0>							0000
DMA2STA	039C	STA<15:0>																0000
DMA2STB	039E	STB<15:0>																0000
DMA2PAD	03A0	PAD<15:0>																0000
DMA2CNT	03A2	—	—	—	—	—	—	CNT<9:0>										0000
DMA3CON	03A4	CHEN	SIZE	DIR	HALF	NULLW	—	—	—	—	—	AMODE<1:0>		—	—	MODE<1:0>		0000
DMA3REQ	03A6	FORCE	—	—	—	—	—	—	—	—	IRQSEL<6:0>							0000
DMA3STA	03A8	STA<15:0>																0000
DMA3STB	03AA	STB<15:0>																0000
DMA3PAD	03AC	PAD<15:0>																0000
DMA3CNT	03AE	—	—	—	—	—	—	CNT<9:0>										0000
DMA4CON	03B0	CHEN	SIZE	DIR	HALF	NULLW	—	—	—	—	—	AMODE<1:0>		—	—	MODE<1:0>		0000
DMA4REQ	03B2	FORCE	—	—	—	—	—	—	—	—	IRQSEL<6:0>							0000
DMA4STA	03B4	STA<15:0>																0000
DMA4STB	03B6	STB<15:0>																0000
DMA4PAD	03B8	PAD<15:0>																0000
DMA4CNT	03BA	—	—	—	—	—	—	CNT<9:0>										0000
DMA5CON	03BC	CHEN	SIZE	DIR	HALF	NULLW	—	—	—	—	—	AMODE<1:0>		—	—	MODE<1:0>		0000
DMA5REQ	03BE	FORCE	—	—	—	—	—	—	—	—	IRQSEL<6:0>							0000
DMA5STA	03C0	STA<15:0>																0000
DMA5STB	03C2	STB<15:0>																0000
DMA5PAD	03C4	PAD<15:0>																0000

Legend: — = unimplemented, read as '0'. Reset values are shown in hexadecimal.

© 2009-2012 Microchip Technology Inc.

TABLE 4-17: DMA REGISTER MAP (CONTINUED)

File Name	Addr	Bit 15	Bit 14	Bit 13	Bit 12	Bit 11	Bit 10	Bit 9	Bit 8	Bit 7	Bit 6	Bit 5	Bit 4	Bit 3	Bit 2	Bit 1	Bit 0	All Resets
DMA5CNT	03C6	—	—	—	—	—	—	CNT<9:0>										0000
DMA6CON	03C8	CHEN	SIZE	DIR	HALF	NULLW	—	—	—	—	—	AMODE<1:0>		—	—	MODE<1:0>		0000
DMA6REQ	03CA	FORCE	—	—	—	—	—	—	—	—	IRQSEL<6:0>							0000
DMA6STA	03CC	STA<15:0>																0000
DMA6STB	03CE	STB<15:0>																0000
DMA6PAD	03D0	PAD<15:0>																0000
DMA6CNT	03D2	—	—	—	—	—	—	CNT<9:0>										0000
DMA7CON	03D4	CHEN	SIZE	DIR	HALF	NULLW	—	—	—	—	—	AMODE<1:0>		—	—	MODE<1:0>		0000
DMA7REQ	03D6	FORCE	—	—	—	—	—	—	—	—	IRQSEL<6:0>							0000
DMA7STA	03D8	STA<15:0>																0000
DMA7STB	03DA	STB<15:0>																0000
DMA7PAD	03DC	PAD<15:0>																0000
DMA7CNT	03DE	—	—	—	—	—	—	CNT<9:0>										0000
DMACS0	03E0	PWCOL7	PWCOL6	PWCOL5	PWCOL4	PWCOL3	PWCOL2	PWCOL1	PWCOL0	XWCOL7	XWCOL6	XWCOL5	XWCOL4	XWCOL3	XWCOL2	XWCOL1	XWCOL0	0000
DMACS1	03E2	—	—	—	—	LSTCH<3:0>				PPST7	PPST6	PPST5	PPST4	PPST3	PPST2	PPST1	PPST0	0000
DSADR	03E4	DSADR<15:0>																0000

Legend: — = unimplemented, read as '0'. Reset values are shown in hexadecimal.

© 2009-2012 Microchip Technology Inc.

TABLE 4-18: ECAN1 REGISTER MAP WHEN C1CTRL1.WIN = 0 OR 1 FOR dsPIC33FJXXXGP506A/51A0/706A/708A/710A DEVICES ONLY

File Name	Addr	Bit 15	Bit 14	Bit 13	Bit 12	Bit 11	Bit 10	Bit 9	Bit 8	Bit 7	Bit 6	Bit 5	Bit 4	Bit 3	Bit 2	Bit 1	Bit 0	All Resets
C1CTRL1	0400	—	—	CSIDL	ABAT	—	REQOP<2:0>			OPMODE<2:0>			—	CANCAP	—	—	WIN	0480
C1CTRL2	0402	—	—	—	—	—	—	—	—	—	—	—	DNCNT<4:0>					0000
C1VEC	0404	—	—	—	FILHIT<4:0>					—	ICODE<6:0>							0000
C1FCTRL	0406	DMABS<2:0>			—	—	—	—	—	—	—	—	FSA<4:0>					0000
C1FIFO	0408	—	—	FBP<5:0>						—	—	FNRB<5:0>						0000
C1INTF	040A	—	—	TXBO	TXBP	RXBP	TXWAR	RXWAR	EWARN	IVRIF	WAKIF	ERRIF	—	FIFOIF	RBOVIF	RBIF	TBIF	0000
C1INTE	040C	—	—	—	—	—	—	—	—	IVRIE	WAKIE	ERRIE	—	FIFOIE	RBOVIE	RBIE	TBIE	0000
C1EC	040E	TERRCNT<7:0>								RERRCNT<7:0>								0000
C1CFG1	0410	—	—	—	—	—	—	—	—	SJW<1:0>		BRP<5:0>						0000
C1CFG2	0412	—	WAKFIL	—	—	—	SEG2PH<2:0>			SEG2PHTS	SAM	SEG1PH<2:0>			PRSEG<2:0>			0000
C1FEN1	0414	FLTEN15	FLTEN14	FLTEN13	FLTEN12	FLTEN11	FLTEN10	FLTEN9	FLTEN8	FLTEN7	FLTEN6	FLTEN5	FLTEN4	FLTEN3	FLTEN2	FLTEN1	FLTEN0	FFFF
C1FMSKSEL1	0418	F7MSK<1:0>		F6MSK<1:0>		F5MSK<1:0>		F4MSK<1:0>		F3MSK<1:0>		F2MSK<1:0>		F1MSK<1:0>		F0MSK<1:0>		0000
C1FMSKSEL2	041A	F15MSK<1:0>		F14MSK<1:0>		F13MSK<1:0>		F12MSK<1:0>		F11MSK<1:0>		F10MSK<1:0>		F9MSK<1:0>		F8MSK<1:0>		0000

Legend: — = unimplemented, read as '0'. Reset values are shown in hexadecimal.

TABLE 4-19: ECAN1 REGISTER MAP WHEN C1CTRL1.WIN = 0 FOR dsPIC33FJXXXGP506A/510A/706A/708A/710A DEVICES ONLY

File Name	Addr	Bit 15	Bit 14	Bit 13	Bit 12	Bit 11	Bit 10	Bit 9	Bit 8	Bit 7	Bit 6	Bit 5	Bit 4	Bit 3	Bit 2	Bit 1	Bit 0	All Resets
	0400-041E	**See definition when WIN = x**																
C1RXFUL1	0420	RXFUL15	RXFUL14	RXFUL13	RXFUL12	RXFUL11	RXFUL10	RXFUL9	RXFUL8	RXFUL7	RXFUL6	RXFUL5	RXFUL4	RXFUL3	RXFUL2	RXFUL1	RXFUL0	0000
C1RXFUL2	0422	RXFUL31	RXFUL30	RXFUL29	RXFUL28	RXFUL27	RXFUL26	RXFUL25	RXFUL24	RXFUL23	RXFUL22	RXFUL21	RXFUL20	RXFUL19	RXFUL18	RXFUL17	RXFUL16	0000
C1RXOVF1	0428	RXOVF15	RXOVF14	RXOVF13	RXOVF12	RXOVF11	RXOVF10	RXOVF9	RXOVF8	RXOVF7	RXOVF6	RXOVF5	RXOVF4	RXOVF3	RXOVF2	RXOVF1	RXOVF0	0000
C1RXOVF2	042A	RXOVF31	RXOVF30	RXOVF29	RXOVF28	RXOVF27	RXOVF26	RXOVF25	RXOVF24	RXOVF23	RXOVF22	RXOVF21	RXOVF20	RXOVF19	RXOVF18	RXOVF17	RXOVF16	0000
C1TR01CON	0430	TXEN1	TXABT1	TXLARB1	TXERR1	TXREQ1	RTREN1	TX1PRI<1:0>		TXEN0	TXABAT0	TXLARB0	TXERR0	TXREQ0	RTREN0	TX0PRI<1:0>		0000
C1TR23CON	0432	TXEN3	TXABT3	TXLARB3	TXERR3	TXREQ3	RTREN3	TX3PRI<1:0>		TXEN2	TXABAT2	TXLARB2	TXERR2	TXREQ2	RTREN2	TX2PRI<1:0>		0000
C1TR45CON	0434	TXEN5	TXABT5	TXLARB5	TXERR5	TXREQ5	RTREN5	TX5PRI<1:0>		TXEN4	TXABAT4	TXLARB4	TXERR4	TXREQ4	RTREN4	TX4PRI<1:0>		0000
C1TR67CON	0436	TXEN7	TXABT7	TXLARB7	TXERR7	TXREQ7	RTREN7	TX7PRI<1:0>		TXEN6	TXABAT6	TXLARB6	TXERR6	TXREQ6	RTREN6	TX6PRI<1:0>		xxxx
C1RXD	0440	Received Data Word																xxxx
C1TXD	0442	Transmit Data Word																xxxx

Legend: x = unknown value on Reset, — = unimplemented, read as '0'. Reset values are shown in hexadecimal.

© 2009-2012 Microchip Technology Inc.

TABLE 4-20: ECAN1 REGISTER MAP WHEN C1CTRL1.WIN = 1 FOR dsPIC33FJXXXGP506A/510A/706A/708A/710A DEVICES ONLY

File Name	Addr	Bit 15	Bit 14	Bit 13	Bit 12	Bit 11	Bit 10	Bit 9	Bit 8	Bit 7	Bit 6	Bit 5	Bit 4	Bit 3	Bit 2	Bit 1	Bit 0	All Resets
	0400-041E	**See definition when WIN = x**																
C1BUFPNT1	0420	F3BP<3:0>				F2BP<3:0>				F1BP<3:0>				F0BP<3:0>				0000
C1BUFPNT2	0422	F7BP<3:0>				F6BP<3:0>				F5BP<3:0>				F4BP<3:0>				0000
C1BUFPNT3	0424	F11BP<3:0>				F10BP<3:0>				F9BP<3:0>				F8BP<3:0>				0000
C1BUFPNT4	0426	F15BP<3:0>				F14BP<3:0>				F13BP<3:0>				F12BP<3:0>				0000
C1RXM0SID	0430	SID<10:3>								SID<2:0>			—	MIDE	—	EID<17:16>		xxxx
C1RXM0EID	0432	EID<15:8>								EID<7:0>								xxxx
C1RXM1SID	0434	SID<10:3>								SID<2:0>			—	MIDE	—	EID<17:16>		xxxx
C1RXM1EID	0436	EID<15:8>								EID<7:0>								xxxx
C1RXM2SID	0438	SID<10:3>								SID<2:0>			—	MIDE	—	EID<17:16>		xxxx
C1RXM2EID	043A	EID<15:8>								EID<7:0>								xxxx
C1RXF0SID	0440	SID<10:3>								SID<2:0>			—	EXIDE	—	EID<17:16>		xxxx
C1RXF0EID	0442	EID<15:8>								EID<7:0>								xxxx
C1RXF1SID	0444	SID<10:3>								SID<2:0>			—	EXIDE	—	EID<17:16>		xxxx
C1RXF1EID	0446	EID<15:8>								EID<7:0>								xxxx
C1RXF2SID	0448	SID<10:3>								SID<2:0>			—	EXIDE	—	EID<17:16>		xxxx
C1RXF2EID	044A	EID<15:8>								EID<7:0>								xxxx
C1RXF3SID	044C	SID<10:3>								SID<2:0>			—	EXIDE	—	EID<17:16>		xxxx
C1RXF3EID	044E	EID<15:8>								EID<7:0>								xxxx
C1RXF4SID	0450	SID<10:3>								SID<2:0>			—	EXIDE	—	EID<17:16>		xxxx
C1RXF4EID	0452	EID<15:8>								EID<7:0>								xxxx
C1RXF5SID	0454	SID<10:3>								SID<2:0>			—	EXIDE	—	EID<17:16>		xxxx
C1RXF5EID	0456	EID<15:8>								EID<7:0>								xxxx
C1RXF6SID	0458	SID<10:3>								SID<2:0>			—	EXIDE	—	EID<17:16>		xxxx
C1RXF6EID	045A	EID<15:8>								EID<7:0>								xxxx
C1RXF7SID	045C	SID<10:3>								SID<2:0>			—	EXIDE	—	EID<17:16>		xxxx
C1RXF7EID	045E	EID<15:8>								EID<7:0>								xxxx
C1RXF8SID	0460	SID<10:3>								SID<2:0>			—	EXIDE	—	EID<17:16>		xxxx
C1RXF8EID	0462	EID<15:8>								EID<7:0>								xxxx
C1RXF9SID	0464	SID<10:3>								SID<2:0>			—	EXIDE	—	EID<17:16>		xxxx
C1RXF9EID	0466	EID<15:8>								EID<7:0>								xxxx
C1RXF10SID	0468	SID<10:3>								SID<2:0>			—	EXIDE	—	EID<17:16>		xxxx
C1RXF10EID	046A	EID<15:8>								EID<7:0>								xxxx

Legend: x = unknown value on Reset, — = unimplemented, read as '0'. Reset values are shown in hexadecimal.

© 2009-2012 Microchip Technology Inc.

TABLE 4-20: ECAN1 REGISTER MAP WHEN C1CTRL1.WIN = 1 FOR dsPIC33FJXXXGP506A/510A/706A/708A/710A DEVICES ONLY

File Name	Addr	Bit 15	Bit 14	Bit 13	Bit 12	Bit 11	Bit 10	Bit 9	Bit 8	Bit 7	Bit 6	Bit 5	Bit 4	Bit 3	Bit 2	Bit 1	Bit 0	All Resets
C1RXF11SID	046C	SID<10:3>								SID<2:0>			—	EXIDE	—	EID<17:16>		xxxx
C1RXF11EID	046E	EID<15:8>								EID<7:0>								xxxx
C1RXF12SID	0470	SID<10:3>								SID<2:0>			—	EXIDE	—	EID<17:16>		xxxx
C1RXF12EID	0472	EID<15:8>								EID<7:0>								xxxx
C1RXF13SID	0474	SID<10:3>								SID<2:0>			—	EXIDE	—	EID<17:16>		xxxx
C1RXF13EID	0476	EID<15:8>								EID<7:0>								xxxx
C1RXF14SID	0478	SID<10:3>								SID<2:0>			—	EXIDE	—	EID<17:16>		xxxx
C1RXF14EID	047A	EID<15:8>								EID<7:0>								xxxx
C1RXF15SID	047C	SID<10:3>								SID<2:0>			—	EXIDE	—	EID<17:16>		xxxx
C1RXF15EID	047E	EID<15:8>								EID<7:0>								xxxx

Legend: x = unknown value on Reset, — = unimplemented, read as '0'. Reset values are shown in hexadecimal.

© 2009-2012 Microchip Technology Inc.

TABLE 4-21: ECAN2 REGISTER MAP WHEN C2CTRL1.WIN = 0 OR 1 FOR dsPIC33FJXXXGP706A/708A/710A DEVICES ONLY

File Name	Addr	Bit 15	Bit 14	Bit 13	Bit 12	Bit 11	Bit 10	Bit 9	Bit 8	Bit 7	Bit 6	Bit 5	Bit 4	Bit 3	Bit 2	Bit 1	Bit 0	All Resets
C2CTRL1	0500	—	—	CSIDL	ABAT	—	REQOP<2:0>			OPMODE<2:0>			—	CANCAP	—	—	WIN	0480
C2CTRL2	0502	—	—	—	—	—	—	—	—	—	—	—	DNCNT<4:0>					0000
C2VEC	0504	—	—	—	FILHIT<4:0>					—	ICODE<6:0>							0000
C2FCTRL	0506	DMABS<2:0>			—	—	—	—	—	—	—	—	FSA<4:0>					0000
C2FIFO	0508	—	—	FBP<5:0>						—	—	FNRB<5:0>						0000
C2INTF	050A	—	—	TXBO	TXBP	RXBP	TXWAR	RXWAR	EWARN	IVRIF	WAKIF	ERRIF	—	FIFOIF	RBOVIF	RBIF	TBIF	0000
C2INTE	050C	—	—	—	—	—	—	—	—	IVRIE	WAKIE	ERRIE	—	FIFOIE	RBOVIE	RBIE	TBIE	0000
C2EC	050E	TERRCNT<7:0>								RERRCNT<7:0>								0000
C2CFG1	0510	—	—	—	—	—	—	—	—	SJW<1:0>		BRP<5:0>						0000
C2CFG2	0512	—	WAKFIL	—	—	—	SEG2PH<2:0>			SEG2PHTS	SAM	SEG1PH<2:0>			PRSEG<2:0>			0000
C2FEN1	0514	FLTEN15	FLTEN14	FLTEN13	FLTEN12	FLTEN11	FLTEN10	FLTEN9	FLTEN8	FLTEN7	FLTEN6	FLTEN5	FLTEN4	FLTEN3	FLTEN2	FLTEN1	FLTEN0	FFFF
C2FMSKSEL1	0518	F7MSK<1:0>		F6MSK<1:0>		F5MSK<1:0>		F4MSK<1:0>		F3MSK<1:0>		F2MSK<1:0>		F1MSK<1:0>		F0MSK<1:0>		0000
C2FMSKSEL2	051A	F15MSK<1:0>		F14MSK<1:0>		F13MSK<1:0>		F12MSK<1:0>		F11MSK<1:0>		F10MSK<1:0>		F9MSK<1:0>		F8MSK<1:0>		0000

Legend: — = unimplemented, read as '0'. Reset values are shown in hexadecimal.

TABLE 4-22: ECAN2 REGISTER MAP WHEN C2CTRL1.WIN = 0 FOR dsPIC33FJXXXGP706A/708A/710A DEVICES ONLY

File Name	Addr	Bit 15	Bit 14	Bit 13	Bit 12	Bit 11	Bit 10	Bit 9	Bit 8	Bit 7	Bit 6	Bit 5	Bit 4	Bit 3	Bit 2	Bit 1	Bit 0	All Resets
	0500-051E	**See definition when WIN = x**																
C2RXFUL1	0520	RXFUL15	RXFUL14	RXFUL13	RXFUL12	RXFUL11	RXFUL10	RXFUL9	RXFUL8	RXFUL7	RXFUL6	RXFUL5	RXFUL4	RXFUL3	RXFUL2	RXFUL1	RXFUL0	0000
C2RXFUL2	0522	RXFUL31	RXFUL30	RXFUL29	RXFUL28	RXFUL27	RXFUL26	RXFUL25	RXFUL24	RXFUL23	RXFUL22	RXFUL21	RXFUL20	RXFUL19	RXFUL18	RXFUL17	RXFUL16	0000
C2RXOVF1	0528	RXOVF15	RXOVF14	RXOVF13	RXOVF12	RXOVF11	RXOVF10	RXOVF09	RXOVF08	RXOVF7	RXOVF6	RXOVF5	RXOVF4	RXOVF3	RXOVF2	RXOVF1	RXOVF0	0000
C2RXOVF2	052A	RXOVF31	RXOVF30	RXOVF29	RXOVF28	RXOVF27	RXOVF26	RXOVF25	RXOVF24	RXOVF23	RXOVF22	RXOVF21	RXOVF20	RXOVF19	RXOVF18	RXOVF17	RXOVF16	0000
C2TR01CON	0530	TXEN1	TX ABAT1	TX LARB1	TX ERR1	TX REQ1	RTREN1	TX1PRI<1:0>		TXEN0	TX ABAT0	TX LARB0	TX ERR0	TX REQ0	RTREN0	TX0PRI<1:0>		0000
C2TR23CON	0532	TXEN3	TX ABAT3	TX LARB3	TX ERR3	TX REQ3	RTREN3	TX3PRI<1:0>		TXEN2	TX ABAT2	TX LARB2	TX ERR2	TX REQ2	RTREN2	TX2PRI<1:0>		0000
C2TR45CON	0534	TXEN5	TX ABAT5	TX LARB5	TX ERR5	TX REQ5	RTREN5	TX5PRI<1:0>		TXEN4	TX ABAT4	TX LARB4	TX ERR4	TX REQ4	RTREN4	TX4PRI<1:0>		0000
C2TR67CON	0536	TXEN7	TX ABAT7	TX LARB7	TX ERR7	TX REQ7	RTREN7	TX7PRI<1:0>		TXEN6	TX ABAT6	TX LARB6	TX ERR6	TX REQ6	RTREN6	TX6PRI<1:0>		xxxx
C2RXD	0540	Recieved Data Word																xxxx
C2TXD	0542	Transmit Data Word																xxxx

Legend: x = unknown value on Reset, — = unimplemented, read as '0'. Reset values are shown in hexadecimal.

© 2009-2012 Microchip Technology Inc.

TABLE 4-23: ECAN2 REGISTER MAP WHEN C2CTRL1.WIN = 1 FOR dsPIC33FJXXXGP706A/708A/710A DEVICES ONLY

File Name	Addr	Bit 15	Bit 14	Bit 13	Bit 12	Bit 11	Bit 10	Bit 9	Bit 8	Bit 7	Bit 6	Bit 5	Bit 4	Bit 3	Bit 2	Bit 1	Bit 0	All Resets
	0500 - 051E	See definition when WIN = x																
C2BUFPNT1	0520	F3BP<3:0>				F2BP<3:0>				F1BP<3:0>				F0BP<3:0>				0000
C2BUFPNT2	0522	F7BP<3:0>				F6BP<3:0>				F5BP<3:0>				F4BP<3:0>				0000
C2BUFPNT3	0524	F11BP<3:0>				F10BP<3:0>				F9BP<3:0>				F8BP<3:0>				0000
C2BUFPNT4	0526	F15BP<3:0>				F14BP<3:0>				F13BP<3:0>				F12BP<3:0>				0000
C2RXM0SID	0530	SID<10:3>								SID<2:0>			—	MIDE	—	EID<17:16>		xxxx
C2RXM0EID	0532	EID<15:8>								EID<7:0>								xxxx
C2RXM1SID	0534	SID<10:3>								SID<2:0>			—	MIDE	—	EID<17:16>		xxxx
C2RXM1EID	0536	EID<15:8>								EID<7:0>								xxxx
C2RXM2SID	0538	SID<10:3>								SID<2:0>			—	MIDE	—	EID<17:16>		xxxx
C2RXM2EID	053A	EID<15:8>								EID<7:0>								xxxx
C2RXF0SID	0540	SID<10:3>								SID<2:0>			—	EXIDE	—	EID<17:16>		xxxx
C2RXF0EID	0542	EID<15:8>								EID<7:0>								xxxx
C2RXF1SID	0544	SID<10:3>								SID<2:0>			—	EXIDE	—	EID<17:16>		xxxx
C2RXF1EID	0546	EID<15:8>								EID<7:0>								xxxx
C2RXF2SID	0548	SID<10:3>								SID<2:0>			—	EXIDE	—	EID<17:16>		xxxx
C2RXF2EID	054A	EID<15:8>								EID<7:0>								xxxx
C2RXF3SID	054C	SID<10:3>								SID<2:0>			—	EXIDE	—	EID<17:16>		xxxx
C2RXF3EID	054E	EID<15:8>								EID<7:0>								xxxx
C2RXF4SID	0550	SID<10:3>								SID<2:0>			—	EXIDE	—	EID<17:16>		xxxx
C2RXF4EID	0552	EID<15:8>								EID<7:0>								xxxx
C2RXF5SID	0554	SID<10:3>								SID<2:0>			—	EXIDE	—	EID<17:16>		xxxx
C2RXF5EID	0556	EID<15:8>								EID<7:0>								xxxx
C2RXF6SID	0558	SID<10:3>								SID<2:0>			—	EXIDE	—	EID<17:16>		xxxx
C2RXF6EID	055A	EID<15:8>								EID<7:0>								xxxx
C2RXF7SID	055C	SID<10:3>								SID<2:0>			—	EXIDE	—	EID<17:16>		xxxx
C2RXF7EID	055E	EID<15:8>								EID<7:0>								xxxx
C2RXF8SID	0560	SID<10:3>								SID<2:0>			—	EXIDE	—	EID<17:16>		xxxx
C2RXF8EID	0562	EID<15:8>								EID<7:0>								xxxx
C2RXF9SID	0564	SID<10:3>								SID<2:0>			—	EXIDE	—	EID<17:16>		xxxx
C2RXF9EID	0566	EID<15:8>								EID<7:0>								xxxx
C2RXF10SID	0568	SID<10:3>								SID<2:0>			—	EXIDE	—	EID<17:16>		xxxx

Legend: x = unknown value on Reset, — = unimplemented, read as '0'. Reset values are shown in hexadecimal.

© 2009-2012 Microchip Technology Inc.

TABLE 4-23: ECAN2 REGISTER MAP WHEN C2CTRL1.WIN = 1 FOR dsPIC33FJXXXGP706A/708A/710A DEVICES ONLY (CONTINUED)

File Name	Addr	Bit 15	Bit 14	Bit 13	Bit 12	Bit 11	Bit 10	Bit 9	Bit 8	Bit 7	Bit 6	Bit 5	Bit 4	Bit 3	Bit 2	Bit 1	Bit 0	All Resets
C2RXF10EID	056A	EID<15:8>								EID<7:0>								xxxx
C2RXF11SID	056C	SID<10:3>								SID<2:0>			—	EXIDE	—	EID<17:16>		xxxx
C2RXF11EID	056E	EID<15:8>								EID<7:0>								xxxx
C2RXF12SID	0570	SID<10:3>								SID<2:0>			—	EXIDE	—	EID<17:16>		xxxx
C2RXF12EID	0572	EID<15:8>								EID<7:0>								xxxx
C2RXF13SID	0574	SID<10:3>								SID<2:0>			—	EXIDE	—	EID<17:16>		xxxx
C2RXF13EID	0576	EID<15:8>								EID<7:0>								xxxx
C2RXF14SID	0578	SID<10:3>								SID<2:0>			—	EXIDE	—	EID<17:16>		xxxx
C2RXF14EID	057A	EID<15:8>								EID<7:0>								xxxx
C2RXF15SID	057C	SID<10:3>								SID<2:0>			—	EXIDE	—	EID<17:16>		xxxx
C2RXF15EID	057E	EID<15:8>								EID<7:0>								xxxx

Legend: x = unknown value on Reset, — = unimplemented, read as '0'. Reset values are shown in hexadecimal.

© 2009-2012 Microchip Technology Inc.

TABLE 4-24: DCI REGISTER MAP

SFR Name	Addr.	Bit 15	Bit 14	Bit 13	Bit 12	Bit 11	Bit 10	Bit 9	Bit 8	Bit 7	Bit 6	Bit 5	Bit 4	Bit 3	Bit 2	Bit 1	Bit 0	Reset State
DCICON1	0280	DCIEN	—	DCISIDL	—	DLOOP	CSCKD	CSCKE	COFSD	UNFM	CSDOM	DJST	—	—	—	COFSM1	COFSM0	0000 0000 0000 0000
DCICON2	0282	—	—	—	—	BLEN1	BLEN0	—	COFSG<3:0>				—	WS<3:0>				0000 0000 0000 0000
DCICON3	0284	—	—	—	—	BCG<11:0>												0000 0000 0000 0000
DCISTAT	0286	—	—	—	—	SLOT3	SLOT2	SLOT1	SLOT0	—	—	—	—	ROV	RFUL	TUNF	TMPTY	0000 0000 0000 0000
TSCON	0288	TSE15	TSE14	TSE13	TSE12	TSE11	TSE10	TSE9	TSE8	TSE7	TSE6	TSE5	TSE4	TSE3	TSE2	TSE1	TSE0	0000 0000 0000 0000
RSCON	028C	RSE15	RSE14	RSE13	RSE12	RSE11	RSE10	RSE9	RSE8	RSE7	RSE6	RSE5	RSE4	RSE3	RSE2	RSE1	RSE0	0000 0000 0000 0000
RXBUF0	0290	Receive Buffer #0 Data Register																0000 0000 0000 0000
RXBUF1	0292	Receive Buffer #1 Data Register																0000 0000 0000 0000
RXBUF2	0294	Receive Buffer #2 Data Register																0000 0000 0000 0000
RXBUF3	0296	Receive Buffer #3 Data Register																0000 0000 0000 0000
TXBUF0	0298	Transmit Buffer #0 Data Register																0000 0000 0000 0000
TXBUF1	029A	Transmit Buffer #1 Data Register																0000 0000 0000 0000
TXBUF2	029C	Transmit Buffer #2 Data Register																0000 0000 0000 0000
TXBUF3	029E	Transmit Buffer #3 Data Register																0000 0000 0000 0000

Legend: — = unimplemented, read as '0'.
Note 1: Refer to the *"dsPIC33F/PIC24H Family Reference Manual"* for descriptions of register bit fields.

TABLE 4-25: PORTA REGISTER MAP(1)

File Name	Addr	Bit 15	Bit 14	Bit 13	Bit 12	Bit 11	Bit 10	Bit 9	Bit 8	Bit 7	Bit 6	Bit 5	Bit 4	Bit 3	Bit 2	Bit 1	Bit 0	All Resets
TRISA	02C0	TRISA15	TRISA14	TRISA13	TRISA12	—	TRISA10	TRISA9	—	TRISA7	TRISA6	TRISA5	TRISA4	TRISA3	TRISA2	TRISA1	TRISA0	F6FF
PORTA	02C2	RA15	RA14	RA13	RA12	—	RA10	RA9	—	RA7	RA6	RA5	RA4	RA3	RA2	RA1	RA0	xxxx
LATA	02C4	LATA15	LATA14	LATA13	LATA12	—	LATA10	LATA9	—	LATA7	LATA6	LATA5	LATA4	LATA3	LATA2	LATA1	LATA0	xxxx
ODCA(2)	06C0	ODCA15	ODCA14	—	—	—	—	—	—	—	—	ODCA5	ODCA4	ODCA3	ODCA2	ODCA1	ODCA0	0000

Legend: x = unknown value on Reset, — = unimplemented, read as '0'. Reset values are shown in hexadecimal for PinHigh devices.
Note 1: The actual set of I/O port pins varies from one device to another. Please refer to the corresponding pinout diagrams.

TABLE 4-26: PORTB REGISTER MAP(1)

File Name	Addr	Bit 15	Bit 14	Bit 13	Bit 12	Bit 11	Bit 10	Bit 9	Bit 8	Bit 7	Bit 6	Bit 5	Bit 4	Bit 3	Bit 2	Bit 1	Bit 0	All Resets
TRISB	02C6	TRISB15	TRISB14	TRISB13	TRISB12	TRISB11	TRISB10	TRISB9	TRISB8	TRISB7	TRISB6	TRISB5	TRISB4	TRISB3	TRISB2	TRISB1	TRISB0	FFFF
PORTB	02C8	RB15	RB14	RB13	RB12	RB11	RB10	RB9	RB8	RB7	RB6	RB5	RB4	RB3	RB2	RB1	RB0	xxxx
LATB	02CA	LATB15	LATB14	LATB13	LATB12	LATB11	LATB10	LATB9	LATB8	LATB7	LATB6	LATB5	LATB4	LATB3	LATB2	LATB1	LATB0	xxxx

Legend: x = unknown value on Reset, — = unimplemented, read as '0'. Reset values are shown in hexadecimal for PinHigh devices.
Note 1: The actual set of I/O port pins varies from one device to another. Please refer to the corresponding pinout diagrams.

© 2009-2012 Microchip Technology Inc.

TABLE 4-27: PORTC REGISTER MAP(1)

File Name	Addr	Bit 15	Bit 14	Bit 13	Bit 12	Bit 11	Bit 10	Bit 9	Bit 8	Bit 7	Bit 6	Bit 5	Bit 4	Bit 3	Bit 2	Bit 1	Bit 0	All Resets
TRISC	02CC	TRISC15	TRISC14	TRISC13	TRISC12	—	—	—	—	—	—	—	TRISC4	TRISC3	TRISC2	TRISC1	—	F01E
PORTC	02CE	RC15	RC14	RC13	RC12	—	—	—	—	—	—	—	RC4	RC3	RC2	RC1	—	xxxx
LATC	02D0	LATC15	LATC14	LATC13	LATC12	—	—	—	—	—	—	—	LATC4	LATC3	LATC2	LATC1	—	xxxx

Legend: x = unknown value on Reset, — = unimplemented, read as '0'. Reset values are shown in hexadecimal for PinHigh devices.
Note 1: The actual set of I/O port pins varies from one device to another. Please refer to the corresponding pinout diagrams.

TABLE 4-28: PORTD REGISTER MAP(1)

File Name	Addr	Bit 15	Bit 14	Bit 13	Bit 12	Bit 11	Bit 10	Bit 9	Bit 8	Bit 7	Bit 6	Bit 5	Bit 4	Bit 3	Bit 2	Bit 1	Bit 0	All Resets
TRISD	02D2	TRISD15	TRISD14	TRISD13	TRISD12	TRISD11	TRISD10	TRISD9	TRISD8	TRISD7	TRISD6	TRISD5	TRISD4	TRISD3	TRISD2	TRISD1	TRISD0	FFFF
PORTD	02D4	RD15	RD14	RD13	RD12	RD11	RD10	RD9	RD8	RD7	RD6	RD5	RD4	RD3	RD2	RD1	RD0	xxxx
LATD	02D6	LATD15	LATD14	LATD13	LATD12	LATD11	LATD10	LATD9	LATD8	LATD7	LATD6	LATD5	LATD4	LATD3	LATD2	LATD1	LATD0	xxxx
ODCD	06D2	ODCD15	ODCD14	ODCD13	ODCD12	ODCD11	ODCD10	ODCD9	ODCD8	ODCD7	ODCD6	ODCD5	ODCD4	ODCD3	ODCD2	ODCD1	ODCD0	0000

Legend: x = unknown value on Reset, — = unimplemented, read as '0'. Reset values are shown in hexadecimal for PinHigh devices.
Note 1: The actual set of I/O port pins varies from one device to another. Please refer to the corresponding pinout diagrams.

TABLE 4-29: PORTE REGISTER MAP(1)

File Name	Addr	Bit 15	Bit 14	Bit 13	Bit 12	Bit 11	Bit 10	Bit 9	Bit 8	Bit 7	Bit 6	Bit 5	Bit 4	Bit 3	Bit 2	Bit 1	Bit 0	All Resets
TRISE	02D8	—	—	—	—	—	—	—	—	TRISE7	TRISE6	TRISE5	TRISE4	TRISE3	TRISE2	TRISE1	TRISE0	00FF
PORTE	02DA	—	—	—	—	—	—	—	—	RE7	RE6	RE5	RE4	RE3	RE2	RE1	RE0	xxxx
LATE	02DC	—	—	—	—	—	—	—	—	LATE7	LATE6	LATE5	LATE4	LATE3	LATE2	LATE1	LATE0	xxxx

Legend: x = unknown value on Reset, — = unimplemented, read as '0'. Reset values are shown in hexadecimal for PinHigh devices.
Note 1: The actual set of I/O port pins varies from one device to another. Please refer to the corresponding pinout diagrams.

TABLE 4-30: PORTF REGISTER MAP(1)

File Name	Addr	Bit 15	Bit 14	Bit 13	Bit 12	Bit 11	Bit 10	Bit 9	Bit 8	Bit 7	Bit 6	Bit 5	Bit 4	Bit 3	Bit 2	Bit 1	Bit 0	All Resets
TRISF	02DE	—	—	TRISF13	TRISF12	—	—	—	TRISF8	TRISF7	TRISF6	TRISF5	TRISF4	TRISF3	TRISF2	TRISF1	TRISF0	31FF
PORTF	02E0	—	—	RF13	RF12	—	—	—	RF8	RF7	RF6	RF5	RF4	RF3	RF2	RF1	RF0	xxxx
LATF	02E2	—	—	LATF13	LATF12	—	—	—	LATF8	LATF7	LATF6	LATF5	LATF4	LATF3	LATF2	LATF1	LATF0	xxxx
ODCF	06DE	—	—	ODCF13	ODCF12	—	—	—	ODCF8	ODCF7	ODCF6	ODCF5	ODCF4	ODCF3	ODCF2	ODCF1	ODCF0	0000

Legend: x = unknown value on Reset, — = unimplemented, read as '0'. Reset values are shown in hexadecimal for PinHigh devices.
Note 1: The actual set of I/O port pins varies from one device to another. Please refer to the corresponding pinout diagrams.

© 2009-2012 Microchip Technology Inc.

TABLE 4-31: PORTG REGISTER MAP(1)

File Name	Addr	Bit 15	Bit 14	Bit 13	Bit 12	Bit 11	Bit 10	Bit 9	Bit 8	Bit 7	Bit 6	Bit 5	Bit 4	Bit 3	Bit 2	Bit 1	Bit 0	All Resets
TRISG	02E4	TRISG15	TRISG14	TRISG13	TRISG12	—	—	TRISG9	TRISG8	TRISG7	TRISG6	—	—	TRISG3	TRISG2	TRISG1	TRISG0	F3CF
PORTG	02E6	RG15	RG14	RG13	RG12	—	—	RG9	RG8	RG7	RG6	—	—	RG3	RG2	RG1	RG0	xxxx
LATG	02E8	LATG15	LATG14	LATG13	LATG12	—	—	LATG9	LATG8	LATG7	LATG6	—	—	LATG3	LATG2	LATG1	LATG0	xxxx
ODCG	06E4	ODCG15	ODCG14	ODCG13	ODCG12	—	—	ODCG9	ODCG8	ODCG7	ODCG6	—	—	ODCG3	ODCG2	ODCG1	ODCG0	0000

Legend: x = unknown value on Reset, — = unimplemented, read as '0'. Reset values are shown in hexadecimal for PinHigh devices.
Note 1: The actual set of I/O port pins varies from one device to another. Please refer to the corresponding pinout diagrams.

TABLE 4-32: SYSTEM CONTROL REGISTER MAP

File Name	Addr	Bit 15	Bit 14	Bit 13	Bit 12	Bit 11	Bit 10	Bit 9	Bit 8	Bit 7	Bit 6	Bit 5	Bit 4	Bit 3	Bit 2	Bit 1	Bit 0	All Resets
RCON	0740	TRAPR	IOPUWR	—	—	—	—	—	VREGS	EXTR	SWR	SWDTEN	WDTO	SLEEP	IDLE	BOR	POR	xxxx(1)
OSCCON	0742	—	COSC<2:0>			—	NOSC<2:0>			CLKLOCK	—	LOCK	—	CF	—	LPOSCEN	OSWEN	0300(2)
CLKDIV	0744	ROI	DOZE<2:0>			DOZEN	FRCDIV<2:0>			PLLPOST<1:0>		—	PLLPRE<4:0>					3040
PLLFBD	0746	—	—	—	—	—	—	—	PLLDIV<8:0>									0030
OSCTUN	0748	—	—	—	—	—	—	—	—	—	—	TUN<5:0>						0000

Legend: x = unknown value on Reset, — = unimplemented, read as '0'. Reset values are shown in hexadecimal.
Note 1: RCON register Reset values dependent on type of Reset.
2: OSCCON register Reset values dependent on the FOSC Configuration bits and by type of Reset.

TABLE 4-33: NVM REGISTER MAP

File Name	Addr	Bit 15	Bit 14	Bit 13	Bit 12	Bit 11	Bit 10	Bit 9	Bit 8	Bit 7	Bit 6	Bit 5	Bit 4	Bit 3	Bit 2	Bit 1	Bit 0	All Resets
NVMCON	0760	WR	WREN	WRERR	—	—	—	—	—	—	ERASE	—	—	NVMOP<3:0>				0000(1)
NVMKEY	0766	—	—	—	—	—	—	—	—	NVMKEY<7:0>								0000

Legend: x = unknown value on Reset, — = unimplemented, read as '0'. Reset values are shown in hexadecimal.
Note 1: Reset value shown is for POR only. Value on other Reset states is dependent on the state of memory write or erase operations at the time of Reset.

TABLE 4-34: PMD REGISTER MAP

File Name	Addr	Bit 15	Bit 14	Bit 13	Bit 12	Bit 11	Bit 10	Bit 9	Bit 8	Bit 7	Bit 6	Bit 5	Bit 4	Bit 3	Bit 2	Bit 1	Bit 0	All Resets
PMD1	0770	T5MD	T4MD	T3MD	T2MD	T1MD	—	—	DCIMD	I2C1MD	U2MD	U1MD	SPI2MD	SPI1MD	C2MD	C1MD	AD1MD	0000
PMD2	0772	IC8MD	IC7MD	IC6MD	IC5MD	IC4MD	IC3MD	IC2MD	IC1MD	OC8MD	OC7MD	OC6MD	OC5MD	OC4MD	OC3MD	OC2MD	OC1MD	0000
PMD3	0774	T9MD	T8MD	T7MD	T6MD	—	—	—	—	—	—	—	—	—	—	I2C2MD	AD2MD	0000

Legend: x = unknown value on Reset, — = unimplemented, read as '0'. Reset values are shown in hexadecimal.

© 2009-2012 Microchip Technology Inc.

4.2.7 SOFTWARE STACK

In addition to its use as a working register, the W15 register in the dsPIC33FJXXXGPX06A/X08A/X10A devices is also used as a software Stack Pointer. The Stack Pointer always points to the first available free word and grows from lower to higher addresses. It pre-decrements for stack pops and post-increments for stack pushes, as shown in Figure 4-6. For a PC push during any `CALL` instruction, the MSb of the PC is zero-extended before the push, ensuring that the MSb is always clear.

> **Note:** A PC push during exception processing concatenates the SRL register to the MSb of the PC prior to the push.

The Stack Pointer Limit register (SPLIM) associated with the Stack Pointer sets an upper address boundary for the stack. SPLIM is uninitialized at Reset. As is the case for the Stack Pointer, SPLIM<0> is forced to '0' because all stack operations must be word-aligned. Whenever an EA is generated using W15 as a source or destination pointer, the resulting address is compared with the value in SPLIM. If the contents of the Stack Pointer (W15) and the SPLIM register are equal and a push operation is performed, a stack error trap will not occur. The stack error trap will occur on a subsequent push operation. Thus, for example, if it is desirable to cause a stack error trap when the stack grows beyond address 0x2000 in RAM, initialize the SPLIM with the value 0x1FFE.

Similarly, a Stack Pointer underflow (stack error) trap is generated when the Stack Pointer address is found to be less than 0x0800. This prevents the stack from interfering with the Special Function Register (SFR) space.

A write to the SPLIM register should not be immediately followed by an indirect read operation using W15.

4.2.8 DATA RAM PROTECTION FEATURE

The dsPIC33F product family supports Data RAM protection features which enable segments of RAM to be protected when used in conjunction with Boot and Secure Code Segment Security. BSRAM (Secure RAM segment for BS) is accessible only from the Boot Segment Flash code when enabled. SSRAM (Secure RAM segment for RAM) is accessible only from the Secure Segment Flash code when enabled. See Table 4-1 for an overview of the BSRAM and SSRAM SFRs.

FIGURE 4-6: CALL STACK FRAME

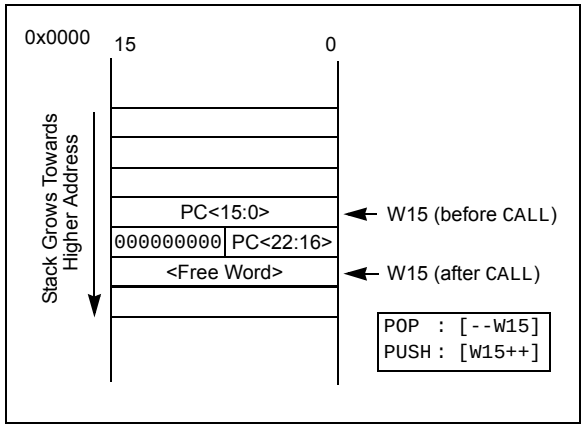

4.3 Instruction Addressing Modes

The addressing modes in Table 4-35 form the basis of the addressing modes optimized to support the specific features of individual instructions. The addressing modes provided in the `MAC` class of instructions are somewhat different from those in the other instruction types.

4.3.1 FILE REGISTER INSTRUCTIONS

Most file register instructions use a 13-bit address field (f) to directly address data present in the first 8192 bytes of data memory (Near Data Space). Most file register instructions employ a working register, W0, which is denoted as WREG in these instructions. The destination is typically either the same file reg-

© 2009-2012 Microchip Technology Inc.

ister or WREG (with the exception of the MUL instruction), which writes the result to a register or register pair. The MOV instruction allows additional flexibility and can access the entire data space.

4.3.2 MCU INSTRUCTIONS

The 3-operand MCU instructions are of the form:

```
Operand 3 = Operand 1 <function> Operand 2
```

where:

Operand 1 is always a working register (i.e., the addressing mode can only be register direct) which is referred to as Wb.

Operand 2 can be a W register, fetched from data memory, or a 5-bit literal. The result location can be either a W register or a data memory location. The following addressing modes are supported by MCU instructions:

- Register Direct
- Register Indirect
- Register Indirect Post-Modified
- Register Indirect Pre-Modified
- 5-bit or 10-bit Literal

Note: Not all instructions support all the addressing modes given above. Individual instructions may support different subsets of these addressing modes.

TABLE 4-35: FUNDAMENTAL ADDRESSING MODES SUPPORTED

Addressing Mode	Description
File Register Direct	The address of the file register is specified explicitly.
Register Direct	The contents of a register are accessed directly.
Register Indirect	The contents of Wn forms the EA.
Register Indirect Post-Modified	The contents of Wn forms the EA. Wn is post-modified (incremented or decremented) by a constant value.
Register Indirect Pre-Modified	Wn is pre-modified (incremented or decremented) by a signed constant value to form the EA.
Register Indirect with Register Offset	The sum of Wn and Wb forms the EA.
Register Indirect with Literal Offset	The sum of Wn and a literal forms the EA.

4.3.3 MOVE AND ACCUMULATOR INSTRUCTIONS

Move instructions and the DSP accumulator class of instructions provide a greater degree of addressing flexibility than other instructions. In addition to the Addressing modes supported by most MCU instructions, move and accumulator instructions also support Register Indirect with Register Offset Addressing mode, also referred to as Register Indexed mode.

Note: For the MOV instructions, the Addressing mode specified in the instruction can differ for the source and destination EA. However, the 4-bit Wb (Register Offset) field is shared between both source and destination (but typically only used by one).

In summary, the following Addressing modes are supported by move and accumulator instructions:

- Register Direct
- Register Indirect
- Register Indirect Post-modified
- Register Indirect Pre-modified
- Register Indirect with Register Offset (Indexed)
- Register Indirect with Literal Offset
- 8-bit Literal
- 16-bit Literal

Note: Not all instructions support all the Addressing modes given above. Individual instructions may support different subsets of these Addressing modes.

4.3.4 MAC INSTRUCTIONS

The dual source operand DSP instructions (CLR, ED, EDAC, MAC, MPY, MPY.N, MOVSAC and MSC), also referred to as MAC instructions, utilize a simplified set of addressing modes to allow the user to effectively manipulate the data pointers through register indirect tables.

The 2-source operand prefetch registers must be members of the set {W8, W9, W10, W11}. For data reads, W8 and W9 are always directed to the X RAGU and W10 and W11 will always be directed to the Y AGU. The effective addresses generated (before and

© 2009-2012 Microchip Technology Inc.

after modification) must, therefore, be valid addresses within X data space for W8 and W9 and Y data space for W10 and W11.

Note:	Register Indirect with Register Offset Addressing mode is only available for W9 (in X space) and W11 (in Y space).

In summary, the following addressing modes are supported by the MAC class of instructions:

- Register Indirect
- Register Indirect Post-Modified by 2
- Register Indirect Post-Modified by 4
- Register Indirect Post-Modified by 6
- Register Indirect with Register Offset (Indexed)

4.3.5 OTHER INSTRUCTIONS

Besides the various addressing modes outlined above, some instructions use literal constants of various sizes. For example, BRA (branch) instructions use 16-bit signed literals to specify the branch destination directly, whereas the DISI instruction uses a 14-bit unsigned literal field. In some instructions, such as ADD Acc, the source of an operand or result is implied by the opcode itself. Certain operations, such as NOP, do not have any operands.

4.4 Modulo Addressing

Modulo Addressing mode is a method of providing an automated means to support circular data buffers using hardware. The objective is to remove the need for software to perform data address boundary checks when executing tightly looped code, as is typical in many DSP algorithms.

Modulo Addressing can operate in either data or program space (since the data pointer mechanism is essentially the same for both). One circular buffer can be supported in each of the X (which also provides the pointers into program space) and Y data spaces. Modulo Addressing can operate on any W register pointer. However, it is not advisable to use W14 or W15 for Modulo Addressing since these two registers are used as the Stack Frame Pointer and Stack Pointer, respectively.

In general, any particular circular buffer can only be configured to operate in one direction as there are certain restrictions on the buffer start address (for incrementing buffers), or end address (for decrementing buffers), based upon the direction of the buffer.

The only exception to the usage restrictions is for buffers which have a power-of-2 length. As these buffers satisfy the start and end address criteria, they may operate in a bidirectional mode (i.e., address boundary checks will be performed on both the lower and upper address boundaries).

4.4.1 START AND END ADDRESS

The Modulo Addressing scheme requires that a starting and ending address be specified and loaded into the 16-bit Modulo Buffer Address registers: XMODSRT, XMODEND, YMODSRT and YMODEND (see Table 4-1).

Note:	Y space Modulo Addressing EA calculations assume word sized data (LSb of every EA is always clear).

The length of a circular buffer is not directly specified. It is determined by the difference between the corresponding start and end addresses. The maximum possible length of the circular buffer is 32K words (64 Kbytes).

4.4.2 W ADDRESS REGISTER SELECTION

The Modulo and Bit-Reversed Addressing Control register, MODCON<15:0>, contains enable flags as well as a W register field to specify the W Address registers. The XWM and YWM fields select which registers will operate with Modulo Addressing. If XWM = 15, X RAGU and X WAGU Modulo Addressing is disabled. Similarly, if YWM = 15, Y AGU Modulo Addressing is disabled.

The X Address Space Pointer W register (XWM), to which Modulo Addressing is to be applied, is stored in MODCON<3:0> (see Table 4-1). Modulo Addressing is enabled for X data space when XWM is set to any value other than '15' and the XMODEN bit is set at MODCON<15>.

The Y Address Space Pointer W register (YWM) to which Modulo Addressing is to be applied is stored in MODCON<7:4>. Modulo Addressing is enabled for Y data space when YWM is set to any value other than '15' and the YMODEN bit is set at MODCON<14>.

FIGURE 4-7: MODULO ADDRESSING OPERATION EXAMPLE

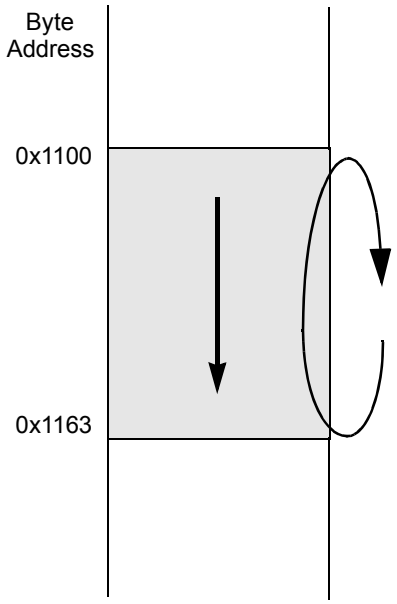


```
MOV     #0x1100, W0
MOV     W0, XMODSRT     ;set modulo start address
MOV     #0x1163, W0
MOV     W0, MODEND      ;set modulo end address
MOV     #0x8001, W0
MOV     W0, MODCON      ;enable W1, X AGU for modulo

MOV     #0x0000, W0     ;W0 holds buffer fill value

MOV     #0x1110, W1     ;point W1 to buffer

DO      AGAIN, #0x31    ;fill the 50 buffer locations
MOV     W0, [W1++]      ;fill the next location
AGAIN:  INC  W0, W0     ;increment the fill value
```

Start Addr = 0x1100
End Addr = 0x1163
Length = 0x0032 words

© 2009-2012 Microchip Technology Inc.

4.4.3 MODULO ADDRESSING APPLICABILITY

Modulo Addressing can be applied to the Effective Address (EA) calculation associated with any W register. It is important to realize that the address boundaries check for addresses less than, or greater than, the upper (for incrementing buffers) and lower (for decrementing buffers) boundary addresses (not just equal to). Address changes may, therefore, jump beyond boundaries and still be adjusted correctly.

Note:	The modulo corrected effective address is written back to the register only when Pre-Modify or Post-Modify Addressing mode is used to compute the effective address. When an address offset (e.g., [W7+W2]) is used, Modulo Address correction is performed but the contents of the register remain unchanged.

4.5 Bit-Reversed Addressing

Bit-Reversed Addressing mode is intended to simplify data re-ordering for radix-2 FFT algorithms. It is supported by the X AGU for data writes only.

The modifier, which may be a constant value or register contents, is regarded as having its bit order reversed. The address source and destination are kept in normal order. Thus, the only operand requiring reversal is the modifier.

4.5.1 BIT-REVERSED ADDRESSING IMPLEMENTATION

Bit-Reversed Addressing mode is enabled when:

1. BWM bits (W register selection) in the MODCON register are any value other than ‘15’ (the stack cannot be accessed using Bit-Reversed Addressing).
2. The BREN bit is set in the XBREV register.
3. The addressing mode used is Register Indirect with Pre-Increment or Post-Increment.

If the length of a bit-reversed buffer is $M = 2^N$ bytes, the last ‘N’ bits of the data buffer start address must be zeros.

XB<14:0> is the Bit-Reversed Address modifier, or ‘pivot point’, which is typically a constant. In the case of an FFT computation, its value is equal to half of the FFT data buffer size.

Note:	All bit-reversed EA calculations assume word sized data (LSb of every EA is always clear). The XB value is scaled accordingly to generate compatible (byte) addresses.

When enabled, Bit-Reversed Addressing is only executed for Register Indirect with Pre-Increment or Post-Increment Addressing and word sized data writes. It will not function for any other addressing mode or for byte sized data and normal addresses are generated instead. When Bit-Reversed Addressing is active, the W Address Pointer is always added to the address modifier (XB) and the offset associated with the Register Indirect Addressing mode is ignored. In addition, as word sized data is a requirement, the LSb of the EA is ignored (and always clear).

Note:	Modulo Addressing and Bit-Reversed Addressing should not be enabled together. In the event that the user attempts to do so, Bit-Reversed Addressing will assume priority when active for the X WAGU and X WAGU Modulo Addressing will be disabled. However, Modulo Addressing will continue to function in the X RAGU.

If Bit-Reversed Addressing has already been enabled by setting the BREN bit (XBREV<15>), a write to the XBREV register should not be immediately followed by an indirect read operation using the W register that has been designated as the bit-reversed pointer.

FIGURE 4-8: BIT-REVERSED ADDRESS EXAMPLE

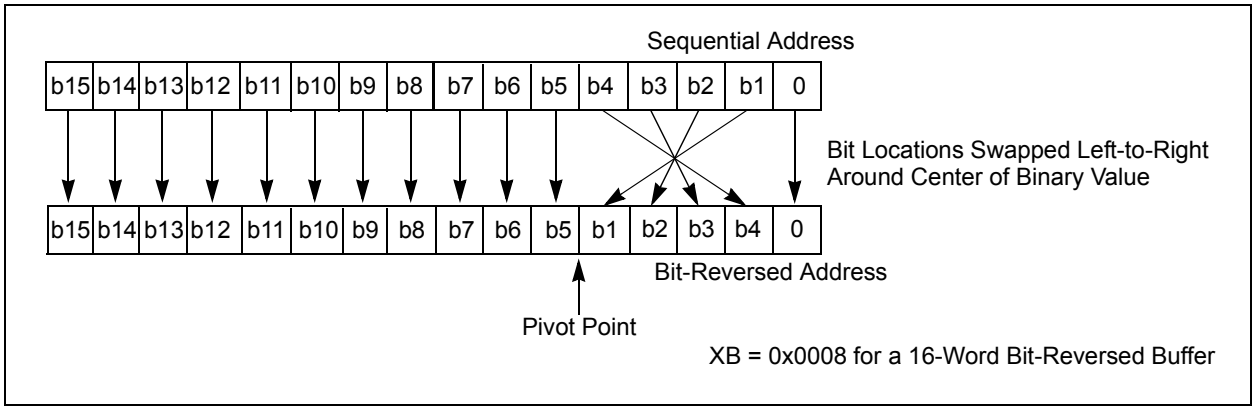

TABLE 4-36: BIT-REVERSED ADDRESS SEQUENCE (16-ENTRY)

Normal Address					Bit-Reversed Address				
A3	A2	A1	A0	Decimal	A3	A2	A1	A0	Decimal
0	0	0	0	0	0	0	0	0	0
0	0	0	1	1	1	0	0	0	8
0	0	1	0	2	0	1	0	0	4
0	0	1	1	3	1	1	0	0	12
0	1	0	0	4	0	0	1	0	2
0	1	0	1	5	1	0	1	0	10
0	1	1	0	6	0	1	1	0	6
0	1	1	1	7	1	1	1	0	14
1	0	0	0	8	0	0	0	1	1
1	0	0	1	9	1	0	0	1	9
1	0	1	0	10	0	1	0	1	5
1	0	1	1	11	1	1	0	1	13
1	1	0	0	12	0	0	1	1	3
1	1	0	1	13	1	0	1	1	11
1	1	1	0	14	0	1	1	1	7
1	1	1	1	15	1	1	1	1	15

© 2009-2012 Microchip Technology Inc.

4.6 Interfacing Program and Data Memory Spaces

The dsPIC33FJXXXGPX06A/X08A/X10A architecture uses a 24-bit wide program space and a 16-bit wide data space. The architecture is also a modified Harvard scheme, meaning that data can also be present in the program space. To use this data successfully, it must be accessed in a way that preserves the alignment of information in both spaces.

Aside from normal execution, the dsPIC33FJXXXGPX06A/X08A/X10A architecture provides two methods by which program space can be accessed during operation:

- Using table instructions to access individual bytes or words anywhere in the program space
- Remapping a portion of the program space into the data space (Program Space Visibility)

Table instructions allow an application to read or write to small areas of the program memory. This capability makes the method ideal for accessing data tables that need to be updated from time to time. It also allows access to all bytes of the program word. The remapping method allows an application to access a large block of data on a read-only basis, which is ideal for look ups from a large table of static data. It can only access the least significant word of the program word.

4.6.1 ADDRESSING PROGRAM SPACE

Since the address ranges for the data and program spaces are 16 and 24 bits, respectively, a method is needed to create a 23-bit or 24-bit program address from 16-bit data registers. The solution depends on the interface method to be used.

For table operations, the 8-bit Table Page register (TBLPAG) is used to define a 32K word region within the program space. This is concatenated with a 16-bit EA to arrive at a full 24-bit program space address. In this format, the Most Significant bit of TBLPAG is used to determine if the operation occurs in the user memory (TBLPAG<7> = 0) or the configuration memory (TBLPAG<7> = 1).

For remapping operations, the 8-bit Program Space Visibility register (PSVPAG) is used to define a 16K word page in the program space. When the Most Significant bit of the EA is ‘1’, PSVPAG is concatenated with the lower 15 bits of the EA to form a 23-bit program space address. Unlike table operations, this limits remapping operations strictly to the user memory area.

Table 4-37 and Figure 4-9 show how the program EA is created for table operations and remapping accesses from the data EA. Here, P<23:0> refers to a program space word, whereas D<15:0> refers to a data space word.

TABLE 4-37: PROGRAM SPACE ADDRESS CONSTRUCTION

Access Type	Access Space	Program Space Address				
		<23>	<22:16>	<15>	<14:1>	<0>
Instruction Access (Code Execution)	User	0	PC<22:1>			0
		0xx xxxx xxxx xxxx xxxx xxx0				
TBLRD/TBLWT (Byte/Word Read/Write)	User	TBLPAG<7:0>		Data EA<15:0>		
		0xxx xxxx		xxxx xxxx xxxx xxxx		
	Configuration	TBLPAG<7:0>		Data EA<15:0>		
		1xxx xxxx		xxxx xxxx xxxx xxxx		
Program Space Visibility (Block Remap/Read)	User	0	PSVPAG<7:0>		Data EA<14:0>(1)	
		0	xxxx xxxx		xxx xxxx xxxx xxxx	

Note 1: Data EA<15> is always ‘1’ in this case, but is not used in calculating the program space address. Bit 15 of the address is PSVPAG<0>.

FIGURE 4-9: DATA ACCESS FROM PROGRAM SPACE ADDRESS GENERATION

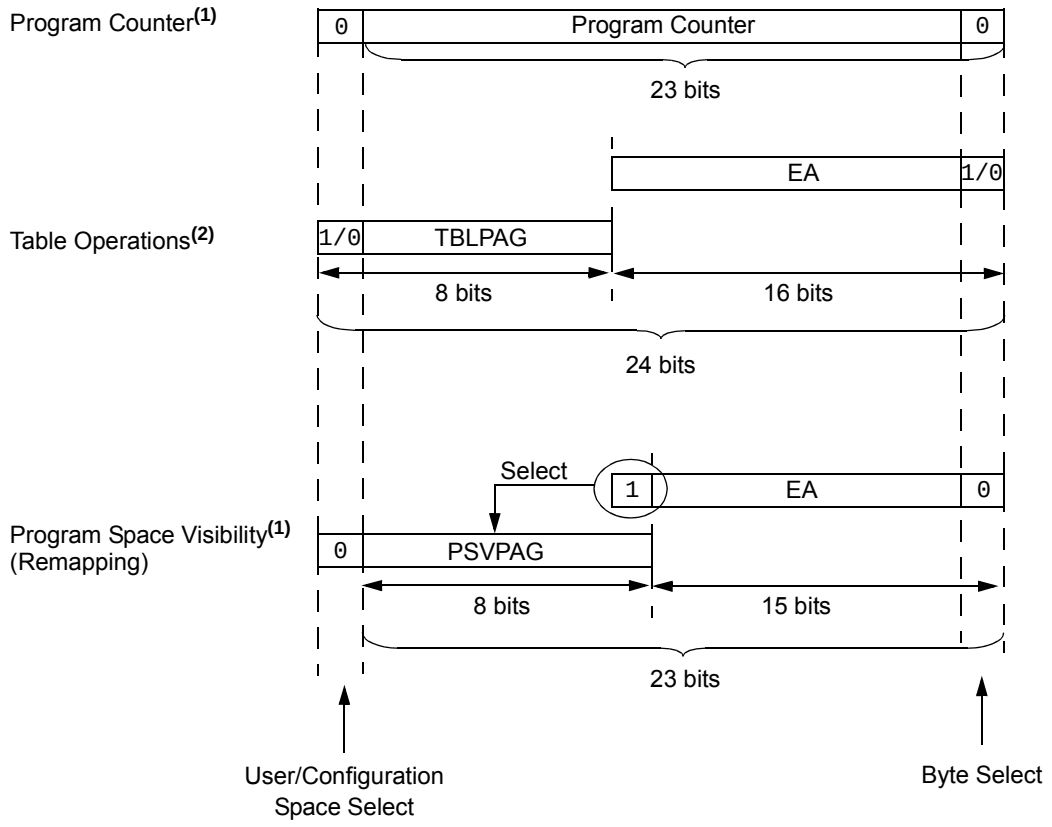

Note 1: The LSb of program space addresses is always fixed as '0' in order to maintain word alignment of data in the program and data spaces.

2: Table operations are not required to be word-aligned. Table read operations are permitted in the configuration memory space.

© 2009-2012 Microchip Technology Inc.

4.6.2 DATA ACCESS FROM PROGRAM MEMORY USING TABLE INSTRUCTIONS

The TBLRDL and TBLWTL instructions offer a direct method of reading or writing the lower word of any address within the program space without going through data space. The TBLRDH and TBLWTH instructions are the only method to read or write the upper 8 bits of a program space word as data.

The PC is incremented by two for each successive 24-bit program word. This allows program memory addresses to directly map to data space addresses. Program memory can thus be regarded as two 16-bit word wide address spaces, residing side by side, each with the same address range. TBLRDL and TBLWTL access the space which contains the least significant data word and TBLRDH and TBLWTH access the space which contains the upper data byte.

Two table instructions are provided to move byte or word sized (16-bit) data to and from program space. Both function as either byte or word operations.

- TBLRDL (Table Read Low): In Word mode, it maps the lower word of the program space location (P<15:0>) to a data address (D<15:0>).

  In Byte mode, either the upper or lower byte of the lower program word is mapped to the lower byte of a data address. The upper byte is selected when Byte Select is ‘1’; the lower byte is selected when it is ‘0’.

- TBLRDH (Table Read High): In Word mode, it maps the entire upper word of a program address (P<23:16>) to a data address. Note that D<15:8>, the ‘phantom byte’, will always be ‘0’.

  In Byte mode, it maps the upper or lower byte of the program word to D<7:0> of the data address, as above. Note that the data will always be ‘0’ when the upper ‘phantom’ byte is selected (Byte Select = 1).

In a similar fashion, two table instructions, TBLWTH and TBLWTL, are used to write individual bytes or words to a program space address. The details of their operation are explained in **Section 5.0 “Flash Program Memory”**.

For all table operations, the area of program memory space to be accessed is determined by the Table Page register (TBLPAG). TBLPAG covers the entire program memory space of the device, including user and configuration spaces. When TBLPAG<7> = 0, the table page is located in the user memory space. When TBLPAG<7> = 1, the page is located in configuration space.

FIGURE 4-10: ACCESSING PROGRAM MEMORY WITH TABLE INSTRUCTIONS

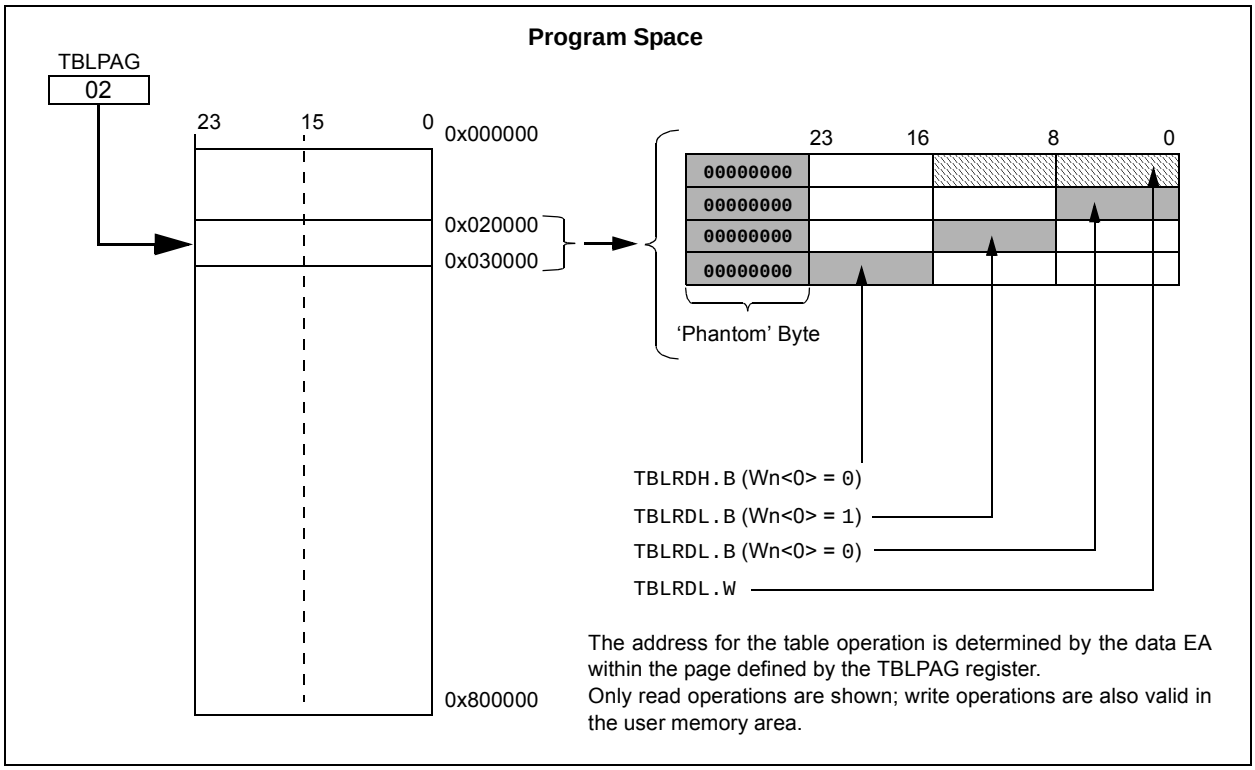

4.6.3 READING DATA FROM PROGRAM MEMORY USING PROGRAM SPACE VISIBILITY

The upper 32 Kbytes of data space may optionally be mapped into any 16K word page of the program space. This option provides transparent access of stored constant data from the data space without the need to use special instructions (i.e., TBLRDL/H).

Program space access through the data space occurs if the Most Significant bit of the data space EA is '1' and program space visibility is enabled by setting the PSV bit in the Core Control register (CORCON<2>). The location of the program memory space to be mapped into the data space is determined by the Program Space Visibility Page register (PSVPAG). This 8-bit register defines any one of 256 possible pages of 16K words in program space. In effect, PSVPAG functions as the upper 8 bits of the program memory address, with the 15 bits of the EA functioning as the lower bits. Note that by incrementing the PC by 2 for each program memory word, the lower 15 bits of data space addresses directly map to the lower 15 bits in the corresponding program space addresses.

Data reads to this area add an additional cycle to the instruction being executed, since two program memory fetches are required.

Although each data space address, 8000h and higher, maps directly into a corresponding program memory address (see Figure 4-11), only the lower 16 bits of the 24-bit program word are used to contain the data. The upper 8 bits of any program space location used as data should be programmed with '1111 1111' or '0000 0000' to force a NOP. This prevents possible issues should the area of code ever be accidentally executed.

> **Note:** PSV access is temporarily disabled during table reads/writes.

For operations that use PSV and are executed outside a REPEAT loop, the MOV and MOV.D instructions require one instruction cycle in addition to the specified execution time. All other instructions require two instruction cycles in addition to the specified execution time.

For operations that use PSV, which are executed inside a REPEAT loop, there will be some instances that require two instruction cycles in addition to the specified execution time of the instruction:

- Execution in the first iteration
- Execution in the last iteration
- Execution prior to exiting the loop due to an interrupt
- Execution upon re-entering the loop after an interrupt is serviced

Any other iteration of the REPEAT loop will allow the instruction accessing data, using PSV, to execute in a single cycle.

FIGURE 4-11: PROGRAM SPACE VISIBILITY OPERATION

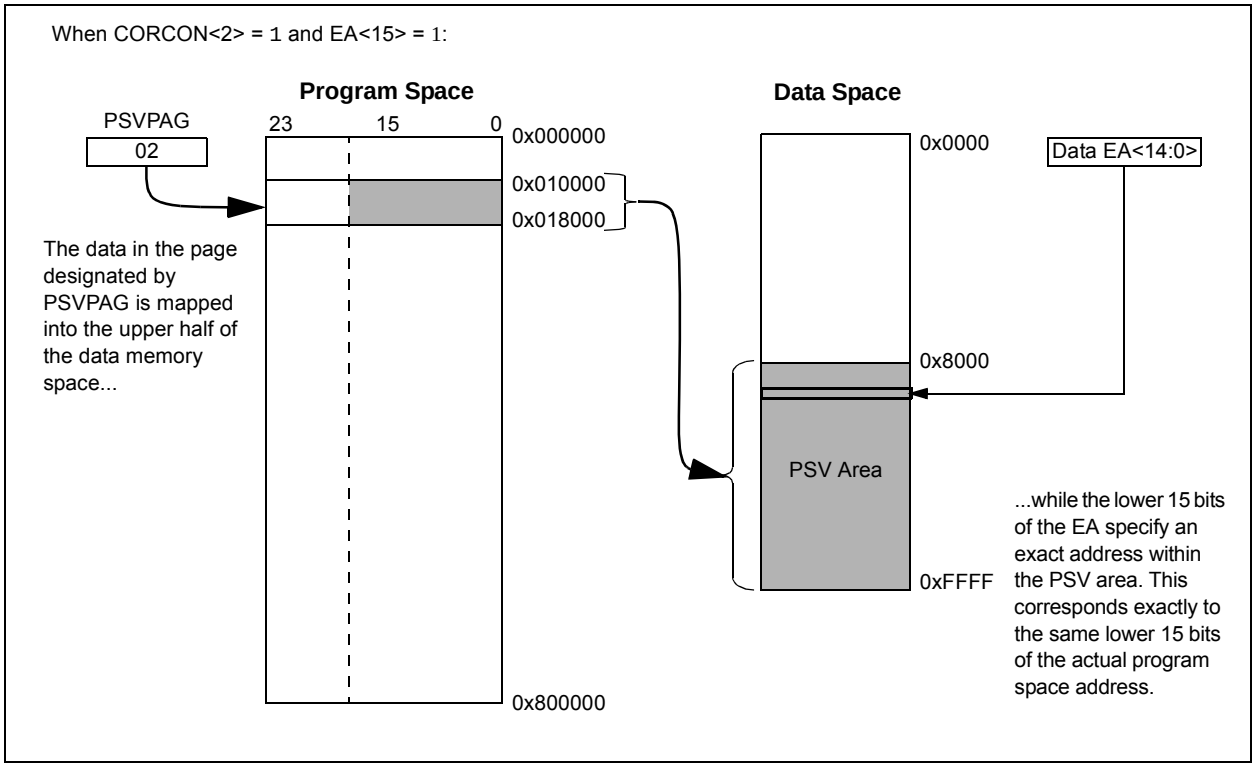

© 2009-2012 Microchip Technology Inc.

5.0 FLASH PROGRAM MEMORY

Note 1: This data sheet summarizes the features of the dsPIC33FJXXXGPX06A/X08A/X10A family of devices. However, it is not intended to be a comprehensive reference source. To complement the information in this data sheet, refer to **Section 5. "Flash Programming"** (DS70191) in the *"dsPIC33F/PIC24H Family Reference Manual"*, which is available from the Microchip web site (www.microchip.com).

2: Some registers and associated bits described in this section may not be available on all devices. Refer to **Section 4.0 "Memory Organization"** in this data sheet for device-specific register and bit information.

The dsPIC33FJXXXGPX06A/X08A/X10A devices contain internal Flash program memory for storing and executing application code. The memory is readable, writable and erasable during normal operation over the entire VDD range.

Flash memory can be programmed in two ways:

- In-Circuit Serial Programming™ (ICSP™) programming capability
- Run-Time Self-Programming (RTSP)

ICSP allows a dsPIC33FJXXXGPX06A/X08A/X10A device to be serially programmed while in the end application circuit. This is simply done with two lines for programming clock and programming data (one of the alternate programming pin pairs: PGECx/PGEDx), and three other lines for power (VDD), ground (VSS) and Master Clear ($\overline{\text{MCLR}}$). This allows customers to manufacture boards with unprogrammed devices and then program the digital signal controller just before shipping the product. This also allows the most recent firmware or a custom firmware to be programmed.

RTSP is accomplished using TBLRD (table read) and TBLWT (table write) instructions. With RTSP, the user can write program memory data either in blocks or 'rows' of 64 instructions (192 bytes) at a time or a single program memory word, and erase program memory in blocks or 'pages' of 512 instructions (1536 bytes) at a time.

5.1 Table Instructions and Flash Programming

Regardless of the method used, all programming of Flash memory is done with the table read and table write instructions. These allow direct read and write access to the program memory space from the data memory while the device is in normal operating mode. The 24-bit target address in the program memory is formed using bits<7:0> of the TBLPAG register and the Effective Address (EA) from a W register specified in the table instruction, as shown in Figure 5-1.

The TBLRDL and the TBLWTL instructions are used to read or write to bits<15:0> of program memory. TBLRDL and TBLWTL can access program memory in both Word and Byte modes.

The TBLRDH and TBLWTH instructions are used to read or write to bits<23:16> of program memory. TBLRDH and TBLWTH can also access program memory in Word or Byte mode.

FIGURE 5-1: ADDRESSING FOR TABLE REGISTERS

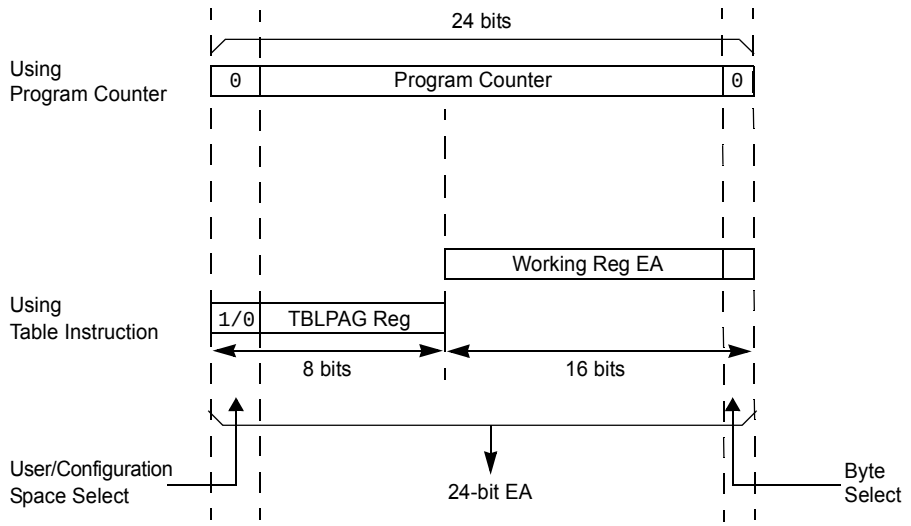

5.2 RTSP Operation

The dsPIC33FJXXXGPX06A/X08A/X10A Flash program memory array is organized into rows of 64 instructions or 192 bytes. RTSP allows the user to erase a page of memory, which consists of eight rows (512 instructions) at a time, and to program one row or one word at a time. Table 25-12 illustrates typical erase and programming times. The 8-row erase pages and single row write rows are edge-aligned, from the beginning of program memory, on boundaries of 1536 bytes and 192 bytes, respectively.

The program memory implements holding buffers that can contain 64 instructions of programming data. Prior to the actual programming operation, the write data must be loaded into the buffers in sequential order. The instruction words loaded must always be from a group of 64 boundary.

The basic sequence for RTSP programming is to set up a Table Pointer, then do a series of `TBLWT` instructions to load the buffers. Programming is performed by setting the control bits in the NVMCON register. A total of 64 `TBLWTL` and `TBLWTH` instructions are required to load the instructions.

All of the table write operations are single-word writes (two instruction cycles) because only the buffers are written. A programming cycle is required for programming each row.

5.3 Programming Operations

A complete programming sequence is necessary for programming or erasing the internal Flash in RTSP mode. The processor stalls (waits) until the programming operation is finished.

The programming time depends on the FRC accuracy (see Table 25-19) and the value of the FRC Oscillator Tuning register (see Register 9-4). Use the following formula to calculate the minimum and maximum values for the Row Write Time, Page Erase Time and Word Write Cycle Time parameters (see Table 25-12).

EQUATION 5-1: PROGRAMMING TIME

$$\frac{T}{7.37\ MHz \times (FRC\ Accuracy)\% \times (FRC\ Tuning)\%}$$

For example, if the device is operating at +125°C, the FRC accuracy will be ±5%. If the TUN<5:0> bits (see Register 9-4) are set to `'b111111`, the minimum row write time is equal to Equation 5-2.

EQUATION 5-2: MINIMUM ROW WRITE TIME

$$T_{RW} = \frac{11064\ Cycles}{7.37\ MHz \times (1 + 0.05) \times (1 - 0.00375)} = 1.435ms$$

The maximum row write time is equal to Equation 5-3.

EQUATION 5-3: MAXIMUM ROW WRITE TIME

$$T_{RW} = \frac{11064\ Cycles}{7.37\ MHz \times (1 - 0.05) \times (1 - 0.00375)} = 1.586ms$$

Setting the WR bit (NVMCON<15>) starts the operation, and the WR bit is automatically cleared when the operation is finished.

5.4 Control Registers

The two SFRs that are used to read and write the program Flash memory are:

- **NVMCON: Flash Memory Control Register**
- **NVMKEY: Non-Volatile Memory Key Register**

The NVMCON register (Register 5-1) controls which blocks are to be erased, which memory type is to be programmed and the start of the programming cycle.

NVMKEY (Register 5-2) is a write-only register that is used for write protection. To start a programming or erase sequence, the user must consecutively write 0x55 and 0xAA to the NVMKEY register. Refer to **Section 5.3 "Programming Operations"** for further details.

© 2009-2012 Microchip Technology Inc.

REGISTER 5-1: NVMCON: FLASH MEMORY CONTROL REGISTER

R/SO-0(1)	R/W-0(1)	R/W-0(1)	U-0	U-0	U-0	U-0	U-0
WR	WREN	WRERR	—	—	—	—	—
bit 15							bit 8

U-0	R/W-0(1)	U-0	U-0	R/W-0(1)	R/W-0(1)	R/W-0(1)	R/W-0(1)
—	ERASE	—	—	NVMOP<3:0>(2)			
bit 7							bit 0

Legend:	SO = Settable only bit		
R = Readable bit	W = Writable bit	U = Unimplemented bit, read as ‘0’	
-n = Value at POR	‘1’ = Bit is set	‘0’ = Bit is cleared	x = Bit is unknown

bit 15 **WR:** Write Control bit
1 = Initiates a Flash memory program or erase operation. The operation is self-timed and the bit is cleared by hardware once operation is complete
0 = Program or erase operation is complete and inactive

bit 14 **WREN:** Write Enable bit
1 = Enable Flash program/erase operations
0 = Inhibit Flash program/erase operations

bit 13 **WRERR:** Write Sequence Error Flag bit
1 = An improper program or erase sequence attempt or termination has occurred (bit is set automatically on any set attempt of the WR bit)
0 = The program or erase operation completed normally

bit 12-7 **Unimplemented:** Read as ‘0’

bit 6 **ERASE:** Erase/Program Enable bit
1 = Perform the erase operation specified by NVMOP<3:0> on the next WR command
0 = Perform the program operation specified by NVMOP<3:0> on the next WR command

bit 5-4 **Unimplemented:** Read as ‘0’

bit 3-0 **NVMOP<3:0>:** NVM Operation Select bits(2)

If ERASE = 1:
1111 = Memory bulk erase operation
1110 = Reserved
1101 = Erase General Segment
1100 = Erase Secure Segment
1011 = Reserved
0011 = No operation
0010 = Memory page erase operation
0001 = No operation
0000 = Erase a single Configuration register byte

If ERASE = 0:
1111 = No operation
1110 = Reserved
1101 = No operation
1100 = No operation
1011 = Reserved
0011 = Memory word program operation
0010 = No operation
0001 = Memory row program operation
0000 = Program a single Configuration register byte

Note 1: These bits can only be reset on POR.
2: All other combinations of NVMOP<3:0> are unimplemented.

REGISTER 5-2: NVMKEY: NON-VOLATILE MEMORY KEY REGISTER

U-0	U-0	U-0	U-0	U-0	U-0	U-0	U-0
—	—	—	—	—	—	—	—
bit 15							bit 8

W-0	W-0	W-0	W-0	W-0	W-0	W-0	W-0
NVMKEY<7:0>							
bit 7							bit 0

Legend:	SO = Settable only bit		
R = Readable bit	W = Writable bit	U = Unimplemented bit, read as ‘0’	
-n = Value at POR	‘1’ = Bit is set	‘0’ = Bit is cleared	x = Bit is unknown

bit 15-8 **Unimplemented:** Read as ‘0’

bit 7-0 **NVMKEY<7:0>:** Key Register (Write Only) bits

© 2009-2012 Microchip Technology Inc.

5.4.1 PROGRAMMING ALGORITHM FOR FLASH PROGRAM MEMORY

The user can program one row of program Flash memory at a time. To do this, it is necessary to erase the 8-row erase page that contains the desired row. The general process is:

1. Read eight rows of program memory (512 instructions) and store in data RAM.
2. Update the program data in RAM with the desired new data.
3. Erase the block (see Example 5-1):
   a) Set the NVMOP bits (NVMCON<3:0>) to '0010' to configure for block erase. Set the ERASE bit (NVMCON<6>) and the WREN bit (NVMCON<14>).
   b) Write the starting address of the page to be erased into the TBLPAG and W registers.
   c) Write 0x55 to NVMKEY.
   d) Write 0xAA to NVMKEY.
   e) Set the WR bit (NVMCON<15>). The erase cycle begins and the CPU stalls for the duration of the erase cycle. When the erase is done, the WR bit is cleared automatically.
4. Write the first 64 instructions from data RAM into the program memory buffers (see Example 5-2).
5. Write the program block to Flash memory:
   a) Set the NVMOP bits to '0001' to configure for row programming. Clear the ERASE bit and set the WREN bit.
   b) Write 0x55 to NVMKEY.
   c) Write 0xAA to NVMKEY.
   d) Set the WR bit. The programming cycle begins and the CPU stalls for the duration of the write cycle. When the write to Flash memory is done, the WR bit is cleared automatically.
6. Repeat steps 4 and 5, using the next available 64 instructions from the block in data RAM by incrementing the value in TBLPAG, until all 512 instructions are written back to Flash memory.

For protection against accidental operations, the write initiate sequence for NVMKEY must be used to allow any erase or program operation to proceed. After the programming command has been executed, the user must wait for the programming time until programming is complete. The two instructions following the start of the programming sequence should be NOPs, as shown in Example 5-3.

EXAMPLE 5-1: ERASING A PROGRAM MEMORY PAGE

```
; Set up NVMCON for block erase operation
        MOV     #0x4042, W0                 ;
        MOV     W0, NVMCON                  ; Initialize NVMCON
; Init pointer to row to be ERASED
        MOV     #tblpage(PROG_ADDR), W0     ;
        MOV     W0, TBLPAG                  ; Initialize PM Page Boundary SFR
        MOV     #tbloffset(PROG_ADDR), W0   ; Initialize in-page EA[15:0] pointer
        TBLWTL  W0, [W0]                    ; Set base address of erase block
        DISI    #5                          ; Block all interrupts with priority <7
                                            ; for next 5 instructions
        MOV     #0x55, W0
        MOV     W0, NVMKEY                  ; Write the 55 key
        MOV     #0xAA, W1                   ;
        MOV     W1, NVMKEY                  ; Write the AA key
        BSET    NVMCON, #WR                 ; Start the erase sequence
        NOP                                 ; Insert two NOPs after the erase
        NOP                                 ; command is asserted
```

EXAMPLE 5-2: LOADING THE WRITE BUFFERS

```
; Set up NVMCON for row programming operations
        MOV     #0x4001, W0                     ;
        MOV     W0, NVMCON                      ; Initialize NVMCON
; Set up a pointer to the first program memory location to be written
; program memory selected, and writes enabled
        MOV     #0x0000, W0                     ;
        MOV     W0, TBLPAG                      ; Initialize PM Page Boundary SFR
        MOV     #0x6000, W0                     ; An example program memory address
; Perform the TBLWT instructions to write the latches
; 0th_program_word
        MOV     #LOW_WORD_0, W2                 ;
        MOV     #HIGH_BYTE_0, W3                ;
        TBLWTL  W2, [W0]                        ; Write PM low word into program latch
        TBLWTH  W3, [W0++]                      ; Write PM high byte into program latch
; 1st_program_word
        MOV     #LOW_WORD_1, W2                 ;
        MOV     #HIGH_BYTE_1, W3                ;
        TBLWTL  W2, [W0]                        ; Write PM low word into program latch
        TBLWTH  W3, [W0++]                      ; Write PM high byte into program latch
;  2nd_program_word
        MOV     #LOW_WORD_2, W2                 ;
        MOV     #HIGH_BYTE_2, W3                ;
        TBLWTL  W2, [W0]                        ; Write PM low word into program latch
        TBLWTH  W3, [W0++]                      ; Write PM high byte into program latch
        •
        •
        •
; 63rd_program_word
        MOV     #LOW_WORD_31, W2                ;
        MOV     #HIGH_BYTE_31, W3               ;
        TBLWTL  W2, [W0]                        ; Write PM low word into program latch
        TBLWTH  W3, [W0++]                      ; Write PM high byte into program latch
```

EXAMPLE 5-3: INITIATING A PROGRAMMING SEQUENCE

```
        DISI    #5                      ; Block all interrupts with priority <7
                                        ; for next 5 instructions
        MOV     #0x55, W0
        MOV     W0, NVMKEY              ; Write the 55 key
        MOV     #0xAA, W1               ;
        MOV     W1, NVMKEY              ; Write the AA key
        BSET    NVMCON, #WR             ; Start the erase sequence
        NOP                             ; Insert two NOPs after the
        NOP                             ; erase command is asserted
```


© 2009-2012 Microchip Technology Inc.

6.0 RESET

Note 1: This data sheet summarizes the features of the dsPIC33FJXXXGPX06A/X08A/X10A family of devices. However, it is not intended to be a comprehensive reference source. To complement the information in this data sheet, refer to **Section 8. "Reset"** (DS70192) in the *"dsPIC33F/PIC24H Family Reference Manual"*, which is available from the Microchip web site (www.microchip.com).

2: Some registers and associated bits described in this section may not be available on all devices. Refer to **Section 4.0 "Memory Organization"** in this data sheet for device-specific register and bit information.

The Reset module combines all Reset sources and controls the device Master Reset Signal, $\overline{\text{SYSRST}}$. The following is a list of device Reset sources:

- POR: Power-on Reset
- BOR: Brown-out Reset
- $\overline{\text{MCLR}}$: Master Clear Pin Reset
- SWR: RESET Instruction
- WDT: Watchdog Timer Reset
- TRAPR: Trap Conflict Reset
- IOPUWR: Illegal Opcode and Uninitialized W Register Reset

A simplified block diagram of the Reset module is shown in Figure 6-1.

Any active source of Reset will make the $\overline{\text{SYSRST}}$ signal active. Many registers associated with the CPU and peripherals are forced to a known Reset state. Most registers are unaffected by a Reset; their status is unknown on POR and unchanged by all other Resets.

Note: Refer to the specific peripheral or CPU section of this manual for register Reset states.

All types of device Reset will set a corresponding status bit in the RCON register to indicate the type of Reset (see Register 6-1). A POR will clear all bits, except for the POR bit (RCON<0>), that are set. The user can set or clear any bit at any time during code execution. The RCON bits only serve as status bits. Setting a particular Reset status bit in software does not cause a device Reset to occur.

The RCON register also has other bits associated with the Watchdog Timer and device power-saving states. The function of these bits is discussed in other sections of this manual.

Note: The status bits in the RCON register should be cleared after they are read so that the next RCON register value after a device Reset will be meaningful.

FIGURE 6-1: RESET SYSTEM BLOCK DIAGRAM

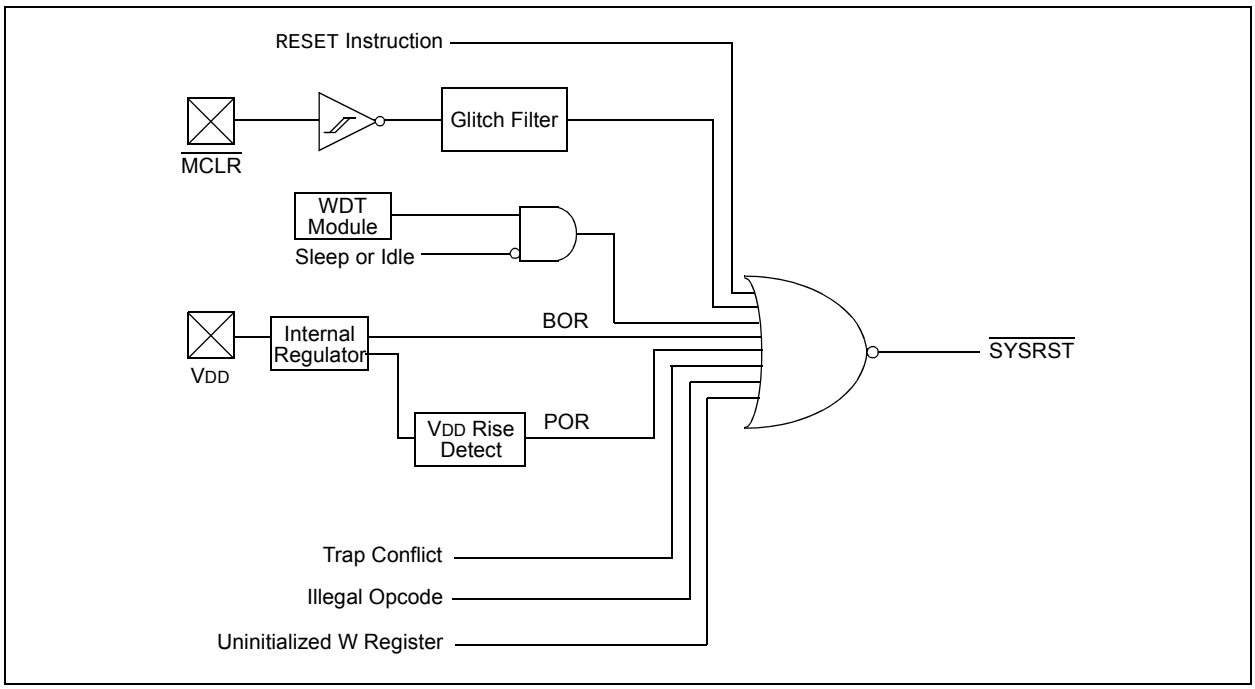

REGISTER 6-1: RCON: RESET CONTROL REGISTER(1)

R/W-0	R/W-0	U-0	U-0	U-0	U-0	U-0	R/W-0
TRAPR	IOPUWR	—	—	—	—	—	VREGS(3)
bit 15							bit 8

R/W-0	R/W-0	R/W-0	R/W-0	R/W-0	R/W-0	R/W-1	R/W-1
EXTR	SWR	SWDTEN(2)	WDTO	SLEEP	IDLE	BOR	POR
bit 7							bit 0

Legend:			
R = Readable bit	W = Writable bit	U = Unimplemented bit, read as ‘0’	
-n = Value at POR	‘1’ = Bit is set	‘0’ = Bit is cleared	x = Bit is unknown

bit 15 **TRAPR:** Trap Reset Flag bit
1 = A Trap Conflict Reset has occurred
0 = A Trap Conflict Reset has not occurred

bit 14 **IOPUWR:** Illegal Opcode or Uninitialized W Access Reset Flag bit
1 = An illegal opcode detection, an illegal address mode or uninitialized W register used as an Address Pointer caused a Reset
0 = An illegal opcode or uninitialized W Reset has not occurred

bit 13-9 **Unimplemented:** Read as ‘0’

bit 8 **VREGS:** Voltage Regulator Standby During Sleep bit(3)
1 = Voltage Regulator is active during Sleep mode
0 = Voltage Regulator goes into standby mode during Sleep

bit 7 **EXTR:** External Reset ($\overline{\text{MCLR}}$) Pin bit
1 = A Master Clear (pin) Reset has occurred
0 = A Master Clear (pin) Reset has not occurred

bit 6 **SWR:** Software Reset (Instruction) Flag bit
1 = A RESET instruction has been executed
0 = A RESET instruction has not been executed

bit 5 **SWDTEN:** Software Enable/Disable of WDT bit(2)
1 = WDT is enabled
0 = WDT is disabled

bit 4 **WDTO:** Watchdog Timer Time-out Flag bit
1 = WDT time-out has occurred
0 = WDT time-out has not occurred

bit 3 **SLEEP:** Wake-up from Sleep Flag bit
1 = Device has been in Sleep mode
0 = Device has not been in Sleep mode

bit 2 **IDLE:** Wake-up from Idle Flag bit
1 = Device was in Idle mode
0 = Device was not in Idle mode

bit 1 **BOR:** Brown-out Reset Flag bit
1 = A Brown-out Reset has occurred
0 = A Brown-out Reset has not occurred

Note 1: All of the Reset status bits may be set or cleared in software. Setting one of these bits in software does not cause a device Reset.

2: If the FWDTEN Configuration bit is ‘1’ (unprogrammed), the WDT is always enabled, regardless of the SWDTEN bit setting.

3: For dsPIC33FJ256GPX06A/X08A/X10A devices, this bit is unimplemented and reads back programmed value.

© 2009-2012 Microchip Technology Inc.

REGISTER 6-1: RCON: RESET CONTROL REGISTER(1) (CONTINUED)

bit 0 **POR:** Power-on Reset Flag bit
1 = A Power-on Reset has occurred
0 = A Power-on Reset has not occurred

Note 1: All of the Reset status bits may be set or cleared in software. Setting one of these bits in software does not cause a device Reset.

2: If the FWDTEN Configuration bit is '1' (unprogrammed), the WDT is always enabled, regardless of the SWDTEN bit setting.

3: For dsPIC33FJ256GPX06A/X08A/X10A devices, this bit is unimplemented and reads back programmed value.

TABLE 6-1: RESET FLAG BIT OPERATION

Flag Bit	Setting Event	Clearing Event
TRAPR (RCON<15>)	Trap conflict event	POR, BOR
IOPUWR (RCON<14>)	Illegal opcode or uninitialized W register access	POR, BOR
EXTR (RCON<7>)	$\overline{\text{MCLR}}$ Reset	POR
SWR (RCON<6>)	RESET instruction	POR, BOR
WDTO (RCON<4>)	WDT time-out	PWRSAV instruction, POR, BOR
SLEEP (RCON<3>)	PWRSAV #SLEEP instruction	POR, BOR
IDLE (RCON<2>)	PWRSAV #IDLE instruction	POR, BOR
BOR (RCON<1>)	BOR, POR	—
POR (RCON<0>)	POR	—

Note: All Reset flag bits may be set or cleared by the user software.

6.1 Clock Source Selection at Reset

If clock switching is enabled, the system clock source at device Reset is chosen, as shown in Table 6-2. If clock switching is disabled, the system clock source is always selected according to the oscillator Configuration bits. Refer to **Section 9.0 "Oscillator Configuration"** for further details.

TABLE 6-2: OSCILLATOR SELECTION VS TYPE OF RESET (CLOCK SWITCHING ENABLED)

Reset Type	Clock Source Determinant
POR	Oscillator Configuration bits (FNOSC<2:0>)
BOR	
$\overline{\text{MCLR}}$	COSC Control bits (OSCCON<14:12>)
WDTR	
SWR	

6.2 Device Reset Times

The Reset times for various types of device Reset are summarized in Table 6-3. The system Reset signal, $\overline{\text{SYSRST}}$, is released after the POR and PWRT delay times expire.

The time at which the device actually begins to execute code also depends on the system oscillator delays, which include the Oscillator Start-up Timer (OST) and the PLL lock time. The OST and PLL lock times occur in parallel with the applicable $\overline{\text{SYSRST}}$ delay times.

The FSCM delay determines the time at which the FSCM begins to monitor the system clock source after the $\overline{\text{SYSRST}}$ signal is released.

© 2009-2012 Microchip Technology Inc.

TABLE 6-3: RESET DELAY TIMES FOR VARIOUS DEVICE RESETS

Reset Type	Clock Source	$\overline{\text{SYSRST}}$ Delay	System Clock Delay	FSCM Delay	See Notes
POR	EC, FRC, LPRC	TPOR + TSTARTUP + TRST	—	—	**1, 2, 3**
	ECPLL, FRCPLL	TPOR + TSTARTUP + TRST	TLOCK	TFSCM	**1, 2, 3, 5, 6**
	XT, HS, SOSC	TPOR + TSTARTUP + TRST	TOST	TFSCM	**1, 2, 3, 4, 6**
	XTPLL, HSPLL	TPOR + TSTARTUP + TRST	TOST + TLOCK	TFSCM	**1, 2, 3, 4, 5, 6**
BOR	EC, FRC, LPRC	TSTARTUP + TRST	—	—	**3**
	ECPLL, FRCPLL	TSTARTUP + TRST	TLOCK	TFSCM	**3, 5, 6**
	XT, HS, SOSC	TSTARTUP + TRST	TOST	TFSCM	**3, 4, 6**
	XTPLL, HSPLL	TSTARTUP + TRST	TOST + TLOCK	TFSCM	**3, 4, 5, 6**
$\overline{\text{MCLR}}$	Any Clock	TRST	—	—	**3**
WDT	Any Clock	TRST	—	—	**3**
Software	Any Clock	TRST	—	—	**3**
Illegal Opcode	Any Clock	TRST	—	—	**3**
Uninitialized W	Any Clock	TRST	—	—	**3**
Trap Conflict	Any Clock	TRST	—	—	**3**

Note 1: TPOR = Power-on Reset delay (10 μs nominal).

2: TSTARTUP = Conditional POR delay of 20 μs nominal (if on-chip regulator is enabled) or 64 ms nominal Power-up Timer delay (if regulator is disabled). TSTARTUP is also applied to all returns from powered-down states, including waking from Sleep mode, only if the regulator is enabled.

3: TRST = Internal state Reset time (20 μs nominal).

4: TOST = Oscillator Start-up Timer. A 10-bit counter counts 1024 oscillator periods before releasing the oscillator clock to the system.

5: TLOCK = PLL lock time (20 μs nominal).

6: TFSCM = Fail-Safe Clock Monitor delay (100 μs nominal).

6.2.1 POR AND LONG OSCILLATOR START-UP TIMES

The oscillator start-up circuitry and its associated delay timers are not linked to the device Reset delays that occur at power-up. Some crystal circuits (especially low-frequency crystals) have a relatively long start-up time. Therefore, one or more of the following conditions is possible after $\overline{\text{SYSRST}}$ is released:

- The oscillator circuit has not begun to oscillate.
- The Oscillator Start-up Timer has not expired (if a crystal oscillator is used).
- The PLL has not achieved a lock (if PLL is used).

The device will not begin to execute code until a valid clock source has been released to the system. Therefore, the oscillator and PLL start-up delays must be considered when the Reset delay time must be known.

6.2.2 FAIL-SAFE CLOCK MONITOR (FSCM) AND DEVICE RESETS

If the FSCM is enabled, it begins to monitor the system clock source when $\overline{\text{SYSRST}}$ is released. If a valid clock source is not available at this time, the device automatically switches to the FRC oscillator and the user can switch to the desired crystal oscillator in the Trap Service Routine.

6.2.2.1 FSCM Delay for Crystal and PLL Clock Sources

When the system clock source is provided by a crystal oscillator and/or the PLL, a small delay, TFSCM, is automatically inserted after the POR and PWRT delay times. The FSCM does not begin to monitor the system clock source until this delay expires. The FSCM delay time is nominally 500 μs and provides additional time for the oscillator and/or PLL to stabilize. In most cases, the FSCM delay prevents an oscillator failure trap at a device Reset when the PWRT is disabled.

6.3 Special Function Register Reset States

Most of the Special Function Registers (SFRs) associated with the CPU and peripherals are reset to a particular value at a device Reset. The SFRs are grouped by their peripheral or CPU function and their Reset values are specified in each section of this manual.

The Reset value for each SFR does not depend on the type of Reset, with the exception of two registers. The Reset value for the Reset Control register, RCON, depends on the type of device Reset. The Reset value for the Oscillator Control register, OSCCON, depends on the type of Reset and the programmed values of the oscillator Configuration bits in the FOSC Configuration register.

NOTES:

© 2009-2012 Microchip Technology Inc.

7.0 INTERRUPT CONTROLLER

Note 1: This data sheet summarizes the features of the dsPIC33FJXXXGPX06A/X08A/X10A family of devices. However, it is not intended to be a comprehensive reference source. To complement the information in this data sheet, refer to **Section 6. "Interrupts"** (DS70184) in the *"dsPIC33F/PIC24H Family Reference Manual"*, which is available from the Microchip web site (www.microchip.com).

2: Some registers and associated bits described in this section may not be available on all devices. Refer to **Section 4.0 "Memory Organization"** in this data sheet for device-specific register and bit information.

The dsPIC33FJXXXGPX06A/X08A/X10A interrupt controller reduces the numerous peripheral interrupt request signals to a single interrupt request signal to the dsPIC33FJXXXGPX06A/X08A/X10A CPU. It has the following features:

- Up to eight processor exceptions and software traps
- Seven user-selectable priority levels
- Interrupt Vector Table (IVT) with up to 118 vectors
- A unique vector for each interrupt or exception source
- Fixed priority within a specified user priority level
- Alternate Interrupt Vector Table (AIVT) for debug support
- Fixed interrupt entry and return latencies

7.1 Interrupt Vector Table

The Interrupt Vector Table is shown in Figure 7-1. The IVT resides in program memory, starting at location 000004h. The IVT contains 126 vectors consisting of eight non-maskable trap vectors plus up to 118 sources of interrupt. In general, each interrupt source has its own vector. Each interrupt vector contains a 24-bit wide address. The value programmed into each interrupt vector location is the starting address of the associated Interrupt Service Routine (ISR).

Interrupt vectors are prioritized in terms of their natural priority; this priority is linked to their position in the vector table. All other things being equal, lower addresses have a higher natural priority. For example, the interrupt associated with vector 0 will take priority over interrupts at any other vector address.

dsPIC33FJXXXGPX06A/X08A/X10A devices implement up to 67 unique interrupts and five non-maskable traps. These are summarized in Table 7-1 and Table 7-2.

7.1.1 ALTERNATE VECTOR TABLE

The Alternate Interrupt Vector Table (AIVT) is located after the IVT, as shown in Figure 7-1. Access to the AIVT is provided by the ALTIVT control bit (INTCON2<15>). If the ALTIVT bit is set, all interrupt and exception processes use the alternate vectors instead of the default vectors. The alternate vectors are organized in the same manner as the default vectors.

The AIVT supports debugging by providing a means to switch between an application and a support environment without requiring the interrupt vectors to be reprogrammed. This feature also enables switching between applications for evaluation of different software algorithms at run time. If the AIVT is not needed, the AIVT should be programmed with the same addresses used in the IVT.

7.2 Reset Sequence

A device Reset is not a true exception because the interrupt controller is not involved in the Reset process. The dsPIC33FJXXXGPX06A/X08A/X10A device clears its registers in response to a Reset, which forces the PC to zero. The digital signal controller then begins program execution at location 0x000000. The user programs a `GOTO` instruction at the Reset address which redirects program execution to the appropriate start-up routine.

Note: Any unimplemented or unused vector locations in the IVT and AIVT should be programmed with the address of a default interrupt handler routine that contains a `RESET` instruction.

FIGURE 7-1: dsPIC33FJXXXGPX06A/X08A/X10A INTERRUPT VECTOR TABLE

Decreasing Natural Order Priority

Reset – GOTO Instruction	0x000000	
Reset – GOTO Address	0x000002	
Reserved	0x000004	
Oscillator Fail Trap Vector		
Address Error Trap Vector		
Stack Error Trap Vector		
Math Error Trap Vector		
DMA Error Trap Vector		
Reserved		
Reserved		
Interrupt Vector 0	0x000014	Interrupt Vector Table (IVT)(1)
Interrupt Vector 1		
~		
~		
~		
Interrupt Vector 52	0x00007C	
Interrupt Vector 53	0x00007E	
Interrupt Vector 54	0x000080	
~		
~		
~		
Interrupt Vector 116	0x0000FC	
Interrupt Vector 117	0x0000FE	
Reserved	0x000100	
Reserved	0x000102	
Reserved		
Oscillator Fail Trap Vector		
Address Error Trap Vector		
Stack Error Trap Vector		
Math Error Trap Vector		
DMA Error Trap Vector		
Reserved		Alternate Interrupt Vector Table (AIVT)(1)
Reserved		
Interrupt Vector 0	0x000114	
Interrupt Vector 1		
~		
~		
~		
Interrupt Vector 52	0x00017C	
Interrupt Vector 53	0x00017E	
Interrupt Vector 54	0x000180	
~		
~		
~		
Interrupt Vector 116		
Interrupt Vector 117	0x0001FE	
Start of Code	0x000200	

Note 1: See Table 7-1 for the list of implemented interrupt vectors.

© 2009-2012 Microchip Technology Inc.

TABLE 7-1: INTERRUPT VECTORS

Vector Number	Interrupt Request (IRQ) Number	IVT Address	AIVT Address	Interrupt Source
8	0	0x000014	0x000114	INT0 – External Interrupt 0
9	1	0x000016	0x000116	IC1 – Input Capture 1
10	2	0x000018	0x000118	OC1 – Output Compare 1
11	3	0x00001A	0x00011A	T1 – Timer1
12	4	0x00001C	0x00011C	DMA0 – DMA Channel 0
13	5	0x00001E	0x00011E	IC2 – Input Capture 2
14	6	0x000020	0x000120	OC2 – Output Compare 2
15	7	0x000022	0x000122	T2 – Timer2
16	8	0x000024	0x000124	T3 – Timer3
17	9	0x000026	0x000126	SPI1E – SPI1 Error
18	10	0x000028	0x000128	SPI1 – SPI1 Transfer Done
19	11	0x00002A	0x00012A	U1RX – UART1 Receiver
20	12	0x00002C	0x00012C	U1TX – UART1 Transmitter
21	13	0x00002E	0x00012E	ADC1 – ADC 1
22	14	0x000030	0x000130	DMA1 – DMA Channel 1
23	15	0x000032	0x000132	Reserved
24	16	0x000034	0x000134	SI2C1 – I2C1 Slave Events
25	17	0x000036	0x000136	MI2C1 – I2C1 Master Events
26	18	0x000038	0x000138	Reserved
27	19	0x00003A	0x00013A	Change Notification Interrupt
28	20	0x00003C	0x00013C	INT1 – External Interrupt 1
29	21	0x00003E	0x00013E	ADC2 – ADC 2
30	22	0x000040	0x000140	IC7 – Input Capture 7
31	23	0x000042	0x000142	IC8 – Input Capture 8
32	24	0x000044	0x000144	DMA2 – DMA Channel 2
33	25	0x000046	0x000146	OC3 – Output Compare 3
34	26	0x000048	0x000148	OC4 – Output Compare 4
35	27	0x00004A	0x00014A	T4 – Timer4
36	28	0x00004C	0x00014C	T5 – Timer5
37	29	0x00004E	0x00014E	INT2 – External Interrupt 2
38	30	0x000050	0x000150	U2RX – UART2 Receiver
39	31	0x000052	0x000152	U2TX – UART2 Transmitter
40	32	0x000054	0x000154	SPI2E – SPI2 Error
41	33	0x000056	0x000156	SPI1 – SPI1 Transfer Done
42	34	0x000058	0x000158	C1RX – ECAN1 Receive Data Ready
43	35	0x00005A	0x00015A	C1 – ECAN1 Event
44	36	0x00005C	0x00015C	DMA3 – DMA Channel 3
45	37	0x00005E	0x00015E	IC3 – Input Capture 3
46	38	0x000060	0x000160	IC4 – Input Capture 4
47	39	0x000062	0x000162	IC5 – Input Capture 5
48	40	0x000064	0x000164	IC6 – Input Capture 6
49	41	0x000066	0x000166	OC5 – Output Compare 5
50	42	0x000068	0x000168	OC6 – Output Compare 6
51	43	0x00006A	0x00016A	OC7 – Output Compare 7
52	44	0x00006C	0x00016C	OC8 – Output Compare 8
53	45	0x00006E	0x00016E	Reserved

TABLE 7-1: INTERRUPT VECTORS (CONTINUED)

Vector Number	Interrupt Request (IRQ) Number	IVT Address	AIVT Address	Interrupt Source
54	46	0x000070	0x000170	DMA4 – DMA Channel 4
55	47	0x000072	0x000172	T6 – Timer6
56	48	0x000074	0x000174	T7 – Timer7
57	49	0x000076	0x000176	SI2C2 – I2C2 Slave Events
58	50	0x000078	0x000178	MI2C2 – I2C2 Master Events
59	51	0x00007A	0x00017A	T8 – Timer8
60	52	0x00007C	0x00017C	T9 – Timer9
61	53	0x00007E	0x00017E	INT3 – External Interrupt 3
62	54	0x000080	0x000180	INT4 – External Interrupt 4
63	55	0x000082	0x000182	C2RX – ECAN2 Receive Data Ready
64	56	0x000084	0x000184	C2 – ECAN2 Event
65	57	0x000086	0x000186	Reserved
66	58	0x000088	0x000188	Reserved
67	59	0x00008A	0x00018A	DCIE – DCI Error
68	60	0x00008C	0x00018C	DCID – DCI Transfer Done
69	61	0x00008E	0x00018E	DMA5 – DMA Channel 5
70	62	0x000090	0x000190	Reserved
71	63	0x000092	0x000192	Reserved
72	64	0x000094	0x000194	Reserved
73	65	0x000096	0x000196	U1E – UART1 Error
74	66	0x000098	0x000198	U2E – UART2 Error
75	67	0x00009A	0x00019A	Reserved
76	68	0x00009C	0x00019C	DMA6 – DMA Channel 6
77	69	0x00009E	0x00019E	DMA7 – DMA Channel 7
78	70	0x0000A0	0x0001A0	C1TX – ECAN1 Transmit Data Request
79	71	0x0000A2	0x0001A2	C2TX – ECAN2 Transmit Data Request
80-125	72-117	0x0000A4-0x0000FE	0x0001A4-0x0001FE	Reserved

TABLE 7-2: TRAP VECTORS

Vector Number	IVT Address	AIVT Address	Trap Source
0	0x000004	0x000104	Reserved
1	0x000006	0x000106	Oscillator Failure
2	0x000008	0x000108	Address Error
3	0x00000A	0x00010A	Stack Error
4	0x00000C	0x00010C	Math Error
5	0x00000E	0x00010E	DMA Error Trap
6	0x000010	0x000110	Reserved
7	0x000012	0x000112	Reserved

© 2009-2012 Microchip Technology Inc.

7.3 Interrupt Control and Status Registers

dsPIC33FJXXXGPX06A/X08A/X10A devices implement a total of 30 registers for the interrupt controller:

- INTCON1
- INTCON2
- IFS0 through IFS4
- IEC0 through IEC4
- IPC0 through IPC17
- INTTREG

Global interrupt control functions are controlled from INTCON1 and INTCON2. INTCON1 contains the Interrupt Nesting Disable (NSTDIS) bit as well as the control and status flags for the processor trap sources. The INTCON2 register controls the external interrupt request signal behavior and the use of the Alternate Interrupt Vector Table.

The IFS registers maintain all of the interrupt request flags. Each source of interrupt has a Status bit, which is set by the respective peripherals or external signal and is cleared via software.

The IEC registers maintain all of the interrupt enable bits. These control bits are used to individually enable interrupts from the peripherals or external signals.

The IPC registers are used to set the interrupt priority level for each source of interrupt. Each user interrupt source can be assigned to one of eight priority levels.

The INTTREG register contains the associated interrupt vector number and the new CPU interrupt priority level, which are latched into vector number (VECNUM<6:0>) and Interrupt level bits (ILR<3:0>) in the INTTREG register. The new interrupt priority level is the priority of the pending interrupt.

The interrupt sources are assigned to the IFSx, IECx and IPCx registers in the same sequence that they are listed in Table 7-1. For example, the INT0 (External Interrupt 0) is shown as having vector number 8 and a natural order priority of 0. Thus, the INT0IF bit is found in IFS0<0>, the INT0IE bit in IEC0<0>, and the INT0IP bits in the first position of IPC0 (IPC0<2:0>).

Although they are not specifically part of the interrupt control hardware, two of the CPU Control registers contain bits that control interrupt functionality. The CPU STATUS register, SR, contains the IPL<2:0> bits (SR<7:5>). These bits indicate the current CPU interrupt priority level. The user can change the current CPU priority level by writing to the IPL bits.

The CORCON register contains the IPL3 bit which, together with IPL<2:0>, also indicates the current CPU priority level. IPL3 is a read-only bit so that trap events cannot be masked by the user software.

All Interrupt registers are described in Register 7-1 through Register 7-32.

REGISTER 7-1: SR: CPU STATUS REGISTER(1)

R-0	R-0	R/C-0	R/C-0	R-0	R/C-0	R -0	R/W-0
OA	OB	SA	SB	OAB	SAB	DA	DC
bit 15							bit 8

R/W-0(3)	R/W-0(3)	R/W-0(3)	R-0	R/W-0	R/W-0	R/W-0	R/W-0
IPL2(2)	**IPL1(2)**	**IPL0(2)**	RA	N	OV	Z	C
bit 7							bit 0

Legend:		
C = Clear only bit	R = Readable bit	U = Unimplemented bit, read as ‘0’
S = Set only bit	W = Writable bit	-n = Value at POR
‘1’ = Bit is set	‘0’ = Bit is cleared	x = Bit is unknown

bit 7-5 **IPL<2:0>:** CPU Interrupt Priority Level Status bits(2)
`111` = CPU Interrupt Priority Level is 7 (15), user interrupts disabled
`110` = CPU Interrupt Priority Level is 6 (14)
`101` = CPU Interrupt Priority Level is 5 (13)
`100` = CPU Interrupt Priority Level is 4 (12)
`011` = CPU Interrupt Priority Level is 3 (11)
`010` = CPU Interrupt Priority Level is 2 (10)
`001` = CPU Interrupt Priority Level is 1 (9)
`000` = CPU Interrupt Priority Level is 0 (8)

Note 1: For complete register details, see Register 3-1.
2: The IPL<2:0> bits are concatenated with the IPL<3> bit (CORCON<3>) to form the CPU Interrupt Priority Level. The value in parentheses indicates the IPL if IPL<3> = `1`. User interrupts are disabled when IPL<3> = `1`.
3: The IPL<2:0> Status bits are read-only when NSTDIS (INTCON1<15>) = `1`.

REGISTER 7-2: CORCON: CORE CONTROL REGISTER(1)

U-0	U-0	U-0	R/W-0	R/W-0	R-0	R-0	R-0
—	—	—	US	EDT	DL<2:0>		
bit 15							bit 8

R/W-0	R/W-0	R/W-1	R/W-0	R/C-0	R/W-0	R/W-0	R/W-0
SATA	SATB	SATDW	ACCSAT	**IPL3(2)**	PSV	RND	IF
bit 7							bit 0

Legend:	C = Clear only bit		
R = Readable bit	W = Writable bit	-n = Value at POR	‘1’ = Bit is set
0’ = Bit is cleared	‘x = Bit is unknown	U = Unimplemented bit, read as ‘0’	

bit 3 **IPL3:** CPU Interrupt Priority Level Status bit 3(2)
`1` = CPU interrupt priority level is greater than 7
`0` = CPU interrupt priority level is 7 or less

Note 1: For complete register details, see Register 3-2.
2: The IPL3 bit is concatenated with the IPL<2:0> bits (SR<7:5>) to form the CPU Interrupt Priority Level.

© 2009-2012 Microchip Technology Inc.

REGISTER 7-3: INTCON1: INTERRUPT CONTROL REGISTER 1

R/W-0	R/W-0	R/W-0	R/W-0	R/W-0	R/W-0	R/W-0	R/W-0
NSTDIS	OVAERR	OVBERR	COVAERR	COVBERR	OVATE	OVBTE	COVTE
bit 15							bit 8

R/W-0	R/W-0	R/W-0	R/W-0	R/W-0	R/W-0	R/W-0	U-0
SFTACERR	DIV0ERR	DMACERR	MATHERR	ADDRERR	STKERR	OSCFAIL	—
bit 7							bit 0

Legend:			
R = Readable bit	W = Writable bit	U = Unimplemented bit, read as ‘0’	
-n = Value at POR	‘1’ = Bit is set	‘0’ = Bit is cleared	x = Bit is unknown

bit 15 **NSTDIS:** Interrupt Nesting Disable bit
1 = Interrupt nesting is disabled
0 = Interrupt nesting is enabled

bit 14 **OVAERR:** Accumulator A Overflow Trap Flag bit
1 = Trap was caused by overflow of Accumulator A
0 = Trap was not caused by overflow of Accumulator A

bit 13 **OVBERR:** Accumulator B Overflow Trap Flag bit
1 = Trap was caused by overflow of Accumulator B
0 = Trap was not caused by overflow of Accumulator B

bit 12 **COVAERR:** Accumulator A Catastrophic Overflow Trap Flag bit
1 = Trap was caused by catastrophic overflow of Accumulator A
0 = Trap was not caused by catastrophic overflow of Accumulator A

bit 11 **COVBERR:** Accumulator B Catastrophic Overflow Trap Flag bit
1 = Trap was caused by catastrophic overflow of Accumulator B
0 = Trap was not caused by catastrophic overflow of Accumulator B

bit 10 **OVATE:** Accumulator A Overflow Trap Enable bit
1 = Trap overflow of Accumulator A
0 = Trap disabled

bit 9 **OVBTE:** Accumulator B Overflow Trap Enable bit
1 = Trap overflow of Accumulator B
0 = Trap disabled

bit 8 **COVTE:** Catastrophic Overflow Trap Enable bit
1 = Trap on catastrophic overflow of Accumulator A or B enabled
0 = Trap disabled

bit 7 **SFTACERR:** Shift Accumulator Error Status bit
1 = Math error trap was caused by an invalid accumulator shift
0 = Math error trap was not caused by an invalid accumulator shift

bit 6 **DIV0ERR:** Arithmetic Error Status bit
1 = Math error trap was caused by a divide by zero
0 = Math error trap was not caused by a divide by zero

bit 5 **DMACERR:** DMA Controller Error Status bit
1 = DMA controller error trap has occurred
0 = DMA controller error trap has not occurred

bit 4 **MATHERR:** Arithmetic Error Status bit
1 = Math error trap has occurred
0 = Math error trap has not occurred

REGISTER 7-3: INTCON1: INTERRUPT CONTROL REGISTER 1 (CONTINUED)

bit 3 **ADDRERR:** Address Error Trap Status bit
1 = Address error trap has occurred
0 = Address error trap has not occurred

bit 2 **STKERR:** Stack Error Trap Status bit
1 = Stack error trap has occurred
0 = Stack error trap has not occurred

bit 1 **OSCFAIL:** Oscillator Failure Trap Status bit
1 = Oscillator failure trap has occurred
0 = Oscillator failure trap has not occurred

bit 0 **Unimplemented:** Read as '0'

© 2009-2012 Microchip Technology Inc.

REGISTER 7-4: INTCON2: INTERRUPT CONTROL REGISTER 2

R/W-0	R-0	U-0	U-0	U-0	U-0	U-0	U-0
ALTIVT	DISI	—	—	—	—	—	—
bit 15							bit 8

U-0	U-0	U-0	R/W-0	R/W-0	R/W-0	R/W-0	R/W-0
—	—	—	INT4EP	INT3EP	INT2EP	INT1EP	INT0EP
bit 7							bit 0

Legend:			
R = Readable bit	W = Writable bit	U = Unimplemented bit, read as ‘0’	
-n = Value at POR	‘1’ = Bit is set	‘0’ = Bit is cleared	x = Bit is unknown

bit 15 **ALTIVT:** Enable Alternate Interrupt Vector Table bit
1 = Use alternate vector table
0 = Use standard (default) vector table

bit 14 **DISI:** DISI Instruction Status bit
1 = DISI instruction is active
0 = DISI instruction is not active

bit 13-5 **Unimplemented:** Read as ‘0’

bit 4 **INT4EP:** External Interrupt 4 Edge Detect Polarity Select bit
1 = Interrupt on negative edge
0 = Interrupt on positive edge

bit 3 **INT3EP:** External Interrupt 3 Edge Detect Polarity Select bit
1 = Interrupt on negative edge
0 = Interrupt on positive edge

bit 2 **INT2EP:** External Interrupt 2 Edge Detect Polarity Select bit
1 = Interrupt on negative edge
0 = Interrupt on positive edge

bit 1 **INT1EP:** External Interrupt 1 Edge Detect Polarity Select bit
1 = Interrupt on negative edge
0 = Interrupt on positive edge

bit 0 **INT0EP:** External Interrupt 0 Edge Detect Polarity Select bit
1 = Interrupt on negative edge
0 = Interrupt on positive edge

REGISTER 7-5: IFS0: INTERRUPT FLAG STATUS REGISTER 0

U-0	R/W-0	R/W-0	R/W-0	R/W-0	R/W-0	R/W-0	R/W-0
—	DMA1IF	AD1IF	U1TXIF	U1RXIF	SPI1IF	SPI1EIF	T3IF
bit 15							bit 8

R/W-0	R/W-0	R/W-0	R/W-0	R/W-0	R/W-0	R/W-0	R/W-0
T2IF	OC2IF	IC2IF	DMA01IF	T1IF	OC1IF	IC1IF	INT0IF
bit 7							bit 0

Legend:			
R = Readable bit	W = Writable bit	U = Unimplemented bit, read as ‘0’	
-n = Value at POR	‘1’ = Bit is set	‘0’ = Bit is cleared	x = Bit is unknown

bit 15 **Unimplemented:** Read as ‘0’

bit 14 **DMA1IF:** DMA Channel 1 Data Transfer Complete Interrupt Flag Status bit
1 = Interrupt request has occurred
0 = Interrupt request has not occurred

bit 13 **AD1IF:** ADC1 Conversion Complete Interrupt Flag Status bit
1 = Interrupt request has occurred
0 = Interrupt request has not occurred

bit 12 **U1TXIF:** UART1 Transmitter Interrupt Flag Status bit
1 = Interrupt request has occurred
0 = Interrupt request has not occurred

bit 11 **U1RXIF:** UART1 Receiver Interrupt Flag Status bit
1 = Interrupt request has occurred
0 = Interrupt request has not occurred

bit 10 **SPI1IF:** SPI1 Event Interrupt Flag Status bit
1 = Interrupt request has occurred
0 = Interrupt request has not occurred

bit 9 **SPI1EIF:** SPI1 Fault Interrupt Flag Status bit
1 = Interrupt request has occurred
0 = Interrupt request has not occurred

bit 8 **T3IF:** Timer3 Interrupt Flag Status bit
1 = Interrupt request has occurred
0 = Interrupt request has not occurred

bit 7 **T2IF:** Timer2 Interrupt Flag Status bit
1 = Interrupt request has occurred
0 = Interrupt request has not occurred

bit 6 **OC2IF:** Output Compare Channel 2 Interrupt Flag Status bit
1 = Interrupt request has occurred
0 = Interrupt request has not occurred

bit 5 **IC2IF:** Input Capture Channel 2 Interrupt Flag Status bit
1 = Interrupt request has occurred
0 = Interrupt request has not occurred

bit 4 **DMA01IF:** DMA Channel 0 Data Transfer Complete Interrupt Flag Status bit
1 = Interrupt request has occurred
0 = Interrupt request has not occurred

bit 3 **T1IF:** Timer1 Interrupt Flag Status bit
1 = Interrupt request has occurred
0 = Interrupt request has not occurred

© 2009-2012 Microchip Technology Inc.

REGISTER 7-5: IFS0: INTERRUPT FLAG STATUS REGISTER 0 (CONTINUED)

bit 2 **OC1IF:** Output Compare Channel 1 Interrupt Flag Status bit
1 = Interrupt request has occurred
0 = Interrupt request has not occurred

bit 1 **IC1IF:** Input Capture Channel 1 Interrupt Flag Status bit
1 = Interrupt request has occurred
0 = Interrupt request has not occurred

bit 0 **INT0IF:** External Interrupt 0 Flag Status bit
1 = Interrupt request has occurred
0 = Interrupt request has not occurred

REGISTER 7-6: IFS1: INTERRUPT FLAG STATUS REGISTER 1

R/W-0	R/W-0	R/W-0	R/W-0	R/W-0	R/W-0	R/W-0	R/W-0
U2TXIF	U2RXIF	INT2IF	T5IF	T4IF	OC4IF	OC3IF	DMA21IF
bit 15							bit 8

R/W-0	R/W-0	R/W-0	R/W-0	R/W-0	U-0	R/W-0	R/W-0
IC8IF	IC7IF	AD2IF	INT1IF	CNIF	—	MI2C1IF	SI2C1IF
bit 7							bit 0

Legend:			
R = Readable bit	W = Writable bit	U = Unimplemented bit, read as ‘0’	
-n = Value at POR	‘1’ = Bit is set	‘0’ = Bit is cleared	x = Bit is unknown

bit 15 **U2TXIF:** UART2 Transmitter Interrupt Flag Status bit
1 = Interrupt request has occurred
0 = Interrupt request has not occurred

bit 14 **U2RXIF:** UART2 Receiver Interrupt Flag Status bit
1 = Interrupt request has occurred
0 = Interrupt request has not occurred

bit 13 **INT2IF:** External Interrupt 2 Flag Status bit
1 = Interrupt request has occurred
0 = Interrupt request has not occurred

bit 12 **T5IF:** Timer5 Interrupt Flag Status bit
1 = Interrupt request has occurred
0 = Interrupt request has not occurred

bit 11 **T4IF:** Timer4 Interrupt Flag Status bit
1 = Interrupt request has occurred
0 = Interrupt request has not occurred

bit 10 **OC4IF:** Output Compare Channel 4 Interrupt Flag Status bit
1 = Interrupt request has occurred
0 = Interrupt request has not occurred

bit 9 **OC3IF:** Output Compare Channel 3 Interrupt Flag Status bit
1 = Interrupt request has occurred
0 = Interrupt request has not occurred

bit 8 **DMA21IF:** DMA Channel 2 Data Transfer Complete Interrupt Flag Status bit
1 = Interrupt request has occurred
0 = Interrupt request has not occurred

bit 7 **IC8IF:** Input Capture Channel 8 Interrupt Flag Status bit
1 = Interrupt request has occurred
0 = Interrupt request has not occurred

bit 6 **IC7IF:** Input Capture Channel 7 Interrupt Flag Status bit
1 = Interrupt request has occurred
0 = Interrupt request has not occurred

bit 5 **AD2IF:** ADC2 Conversion Complete Interrupt Flag Status bit
1 = Interrupt request has occurred
0 = Interrupt request has not occurred

bit 4 **INT1IF:** External Interrupt 1 Flag Status bit
1 = Interrupt request has occurred
0 = Interrupt request has not occurred

© 2009-2012 Microchip Technology Inc.

REGISTER 7-6: IFS1: INTERRUPT FLAG STATUS REGISTER 1 (CONTINUED)

bit 3	**CNIF:** Input Change Notification Interrupt Flag Status bit 1 = Interrupt request has occurred 0 = Interrupt request has not occurred
bit 2	**Unimplemented:** Read as '0'
bit 1	**MI2C1IF:** I2C1 Master Events Interrupt Flag Status bit 1 = Interrupt request has occurred 0 = Interrupt request has not occurred
bit 0	**SI2C1IF:** I2C1 Slave Events Interrupt Flag Status bit 1 = Interrupt request has occurred 0 = Interrupt request has not occurred

REGISTER 7-7: IFS2: INTERRUPT FLAG STATUS REGISTER 2

R/W-0	R/W-0	U-0	R/W-0	R/W-0	R/W-0	R/W-0	R/W-0
T6IF	DMA4IF	—	OC8IF	OC7IF	OC6IF	OC5IF	IC6IF
bit 15							bit 8

R/W-0	R/W-0	R/W-0	R/W-0	R/W-0	R/W-0	R/W-0	R/W-0
IC5IF	IC4IF	IC3IF	DMA3IF	C1IF	C1RXIF	SPI2IF	SPI2EIF
bit 7							bit 0

Legend:			
R = Readable bit	W = Writable bit	U = Unimplemented bit, read as ‘0’	
-n = Value at POR	‘1’ = Bit is set	‘0’ = Bit is cleared	x = Bit is unknown

bit 15 **T6IF:** Timer6 Interrupt Flag Status bit
1 = Interrupt request has occurred
0 = Interrupt request has not occurred

bit 14 **DMA4IF:** DMA Channel 4 Data Transfer Complete Interrupt Flag Status bit
1 = Interrupt request has occurred
0 = Interrupt request has not occurred

bit 13 **Unimplemented:** Read as ‘0’

bit 12 **OC8IF:** Output Compare Channel 8 Interrupt Flag Status bit
1 = Interrupt request has occurred
0 = Interrupt request has not occurred

bit 11 **OC7IF:** Output Compare Channel 7 Interrupt Flag Status bit
1 = Interrupt request has occurred
0 = Interrupt request has not occurred

bit 10 **OC6IF:** Output Compare Channel 6 Interrupt Flag Status bit
1 = Interrupt request has occurred
0 = Interrupt request has not occurred

bit 9 **OC5IF:** Output Compare Channel 5 Interrupt Flag Status bit
1 = Interrupt request has occurred
0 = Interrupt request has not occurred

bit 8 **IC6IF:** Input Capture Channel 6 Interrupt Flag Status bit
1 = Interrupt request has occurred
0 = Interrupt request has not occurred

bit 7 **IC5IF:** Input Capture Channel 5 Interrupt Flag Status bit
1 = Interrupt request has occurred
0 = Interrupt request has not occurred

bit 6 **IC4IF:** Input Capture Channel 4 Interrupt Flag Status bit
1 = Interrupt request has occurred
0 = Interrupt request has not occurred

bit 5 **IC3IF:** Input Capture Channel 3 Interrupt Flag Status bit
1 = Interrupt request has occurred
0 = Interrupt request has not occurred

bit 4 **DMA3IF:** DMA Channel 3 Data Transfer Complete Interrupt Flag Status bit
1 = Interrupt request has occurred
0 = Interrupt request has not occurred

bit 3 **C1IF:** ECAN1 Event Interrupt Flag Status bit
1 = Interrupt request has occurred
0 = Interrupt request has not occurred

© 2009-2012 Microchip Technology Inc.

REGISTER 7-7: IFS2: INTERRUPT FLAG STATUS REGISTER 2 (CONTINUED)

bit 2	**C1RXIF:** ECAN1 Receive Data Ready Interrupt Flag Status bit 1 = Interrupt request has occurred 0 = Interrupt request has not occurred
bit 1	**SPI2IF:** SPI2 Event Interrupt Flag Status bit 1 = Interrupt request has occurred 0 = Interrupt request has not occurred
bit 0	**SPI2EIF:** SPI2 Error Interrupt Flag Status bit 1 = Interrupt request has occurred 0 = Interrupt request has not occurred

REGISTER 7-8: IFS3: INTERRUPT FLAG STATUS REGISTER 3

U-0	U-0	R/W-0	R/W-0	R/W-0	U-0	U-0	R/W-0
—	—	DMA5IF	DCIIF	DCIEIF	—	—	C2IF
bit 15							bit 8

R/W-0	R/W-0	R/W-0	R/W-0	R/W-0	R/W-0	R/W-0	R/W-0
C2RXIF	INT4IF	INT3IF	T9IF	T8IF	MI2C2IF	SI2C2IF	T7IF
bit 7							bit 0

Legend:			
R = Readable bit	W = Writable bit	U = Unimplemented bit, read as ‘0’	
-n = Value at POR	‘1’ = Bit is set	‘0’ = Bit is cleared	x = Bit is unknown

bit 15-14 **Unimplemented:** Read as ‘0’

bit 13 **DMA5IF:** DMA Channel 5 Data Transfer Complete Interrupt Flag Status bit
1 = Interrupt request has occurred
0 = Interrupt request has not occurred

bit 12 **DCIIF:** DCI Event Interrupt Flag Status bit
1 = Interrupt request has occurred
0 = Interrupt request has not occurred

bit 11 **DCIEIF:** DCI Error Interrupt Flag Status bit
1 = Interrupt request has occurred
0 = Interrupt request has not occurred

bit 10-9 **Unimplemented:** Read as ‘0’

bit 8 **C2IF:** ECAN2 Event Interrupt Flag Status bit
1 = Interrupt request has occurred
0 = Interrupt request has not occurred

bit 7 **C2RXIF:** ECAN2 Receive Data Ready Interrupt Flag Status bit
1 = Interrupt request has occurred
0 = Interrupt request has not occurred

bit 6 **INT4IF:** External Interrupt 4 Flag Status bit
1 = Interrupt request has occurred
0 = Interrupt request has not occurred

bit 5 **INT3IF:** External Interrupt 3 Flag Status bit
1 = Interrupt request has occurred
0 = Interrupt request has not occurred

bit 4 **T9IF:** Timer9 Interrupt Flag Status bit
1 = Interrupt request has occurred
0 = Interrupt request has not occurred

bit 3 **T8IF:** Timer8 Interrupt Flag Status bit
1 = Interrupt request has occurred
0 = Interrupt request has not occurred

bit 2 **MI2C2IF:** I2C2 Master Events Interrupt Flag Status bit
1 = Interrupt request has occurred
0 = Interrupt request has not occurred

bit 1 **SI2C2IF:** I2C2 Slave Events Interrupt Flag Status bit
1 = Interrupt request has occurred
0 = Interrupt request has not occurred

bit 0 **T7IF:** Timer7 Interrupt Flag Status bit
1 = Interrupt request has occurred
0 = Interrupt request has not occurred

© 2009-2012 Microchip Technology Inc.

REGISTER 7-9: IFS4: INTERRUPT FLAG STATUS REGISTER 4

U-0	U-0	U-0	U-0	U-0	U-0	U-0	U-0
—	—	—	—	—	—	—	—
bit 15							bit 8

R/W-0	R/W-0	R/W-0	R/W-0	U-0	R/W-0	R/W-0	U-0
C2TXIF	C1TXIF	DMA7IF	DMA6IF	—	U2EIF	U1EIF	—
bit 7							bit 0

Legend:			
R = Readable bit	W = Writable bit	U = Unimplemented bit, read as ‘0’	
-n = Value at POR	‘1’ = Bit is set	‘0’ = Bit is cleared	x = Bit is unknown

bit 15-8 **Unimplemented:** Read as ‘0’

bit 7 **C2TXIF:** ECAN2 Transmit Data Request Interrupt Flag Status bit
1 = Interrupt request has occurred
0 = Interrupt request has not occurred

bit 6 **C1TXIF:** ECAN1 Transmit Data Request Interrupt Flag Status bit
1 = Interrupt request has occurred
0 = Interrupt request has not occurred

bit 5 **DMA7IF:** DMA Channel 7 Data Transfer Complete Interrupt Flag Status bit
1 = Interrupt request has occurred
0 = Interrupt request has not occurred

bit 4 **DMA6IF:** DMA Channel 6 Data Transfer Complete Interrupt Flag Status bit
1 = Interrupt request has occurred
0 = Interrupt request has not occurred

bit 3 **Unimplemented:** Read as ‘0’

bit 2 **U2EIF:** UART2 Interrupt Flag Status bit
1 = Interrupt request has occurred
0 = Interrupt request has not occurred

bit 1 **U1EIF:** UART1 Interrupt Flag Status bit
1 = Interrupt request has occurred
0 = Interrupt request has not occurred

bit 0 **Unimplemented:** Read as ‘0’

REGISTER 7-10: IEC0: INTERRUPT ENABLE CONTROL REGISTER 0

U-0	R/W-0	R/W-0	R/W-0	R/W-0	R/W-0	R/W-0	R/W-0
—	DMA1IE	AD1IE	U1TXIE	U1RXIE	SPI1IE	SPI1EIE	T3IE
bit 15							bit 8

R/W-0	R/W-0	R/W-0	R/W-0	R/W-0	R/W-0	R/W-0	R/W-0
T2IE	OC2IE	IC2IE	DMA0IE	T1IE	OC1IE	IC1IE	INT0IE
bit 7							bit 0

Legend:			
R = Readable bit	W = Writable bit	U = Unimplemented bit, read as ‘0’	
-n = Value at POR	‘1’ = Bit is set	‘0’ = Bit is cleared	x = Bit is unknown

bit 15 **Unimplemented:** Read as ‘0’

bit 14 **DMA1IE:** DMA Channel 1 Data Transfer Complete Interrupt Enable bit
1 = Interrupt request enabled
0 = Interrupt request not enabled

bit 13 **AD1IE:** ADC1 Conversion Complete Interrupt Enable bit
1 = Interrupt request enabled
0 = Interrupt request not enabled

bit 12 **U1TXIE:** UART1 Transmitter Interrupt Enable bit
1 = Interrupt request enabled
0 = Interrupt request not enabled

bit 11 **U1RXIE:** UART1 Receiver Interrupt Enable bit
1 = Interrupt request enabled
0 = Interrupt request not enabled

bit 10 **SPI1IE:** SPI1 Event Interrupt Enable bit
1 = Interrupt request enabled
0 = Interrupt request not enabled

bit 9 **SPI1EIE:** SPI1 Error Interrupt Enable bit
1 = Interrupt request enabled
0 = Interrupt request not enabled

bit 8 **T3IE:** Timer3 Interrupt Enable bit
1 = Interrupt request enabled
0 = Interrupt request not enabled

bit 7 **T2IE:** Timer2 Interrupt Enable bit
1 = Interrupt request enabled
0 = Interrupt request not enabled

bit 6 **OC2IE:** Output Compare Channel 2 Interrupt Enable bit
1 = Interrupt request enabled
0 = Interrupt request not enabled

bit 5 **IC2IE:** Input Capture Channel 2 Interrupt Enable bit
1 = Interrupt request enabled
0 = Interrupt request not enabled

bit 4 **DMA0IE:** DMA Channel 0 Data Transfer Complete Interrupt Enable bit
1 = Interrupt request enabled
0 = Interrupt request not enabled

bit 3 **T1IE:** Timer1 Interrupt Enable bit
1 = Interrupt request enabled
0 = Interrupt request not enabled

© 2009-2012 Microchip Technology Inc.

REGISTER 7-10: IEC0: INTERRUPT ENABLE CONTROL REGISTER 0 (CONTINUED)

bit 2	**OC1IE:** Output Compare Channel 1 Interrupt Enable bit 1 = Interrupt request enabled 0 = Interrupt request not enabled
bit 1	**IC1IE:** Input Capture Channel 1 Interrupt Enable bit 1 = Interrupt request enabled 0 = Interrupt request not enabled
bit 0	**INT0IE:** External Interrupt 0 Enable bit 1 = Interrupt request enabled 0 = Interrupt request not enabled

REGISTER 7-11: IEC1: INTERRUPT ENABLE CONTROL REGISTER 1

R/W-0	R/W-0	R/W-0	R/W-0	R/W-0	R/W-0	R/W-0	R/W-0
U2TXIE	U2RXIE	INT2IE	T5IE	T4IE	OC4IE	OC3IE	DMA2IE
bit 15							bit 8

R/W-0	R/W-0	R/W-0	R/W-0	R/W-0	U-0	R/W-0	R/W-0
IC8IE	IC7IE	AD2IE	INT1IE	CNIE	—	MI2C1IE	SI2C1IE
bit 7							bit 0

Legend:			
R = Readable bit	W = Writable bit	U = Unimplemented bit, read as ‘0’	
-n = Value at POR	‘1’ = Bit is set	‘0’ = Bit is cleared	x = Bit is unknown

bit 15 **U2TXIE:** UART2 Transmitter Interrupt Enable bit
1 = Interrupt request enabled
0 = Interrupt request not enabled

bit 14 **U2RXIE:** UART2 Receiver Interrupt Enable bit
1 = Interrupt request enabled
0 = Interrupt request not enabled

bit 13 **INT2IE:** External Interrupt 2 Enable bit
1 = Interrupt request enabled
0 = Interrupt request not enabled

bit 12 **T5IE:** Timer5 Interrupt Enable bit
1 = Interrupt request enabled
0 = Interrupt request not enabled

bit 11 **T4IE:** Timer4 Interrupt Enable bit
1 = Interrupt request enabled
0 = Interrupt request not enabled

bit 10 **OC4IE:** Output Compare Channel 4 Interrupt Enable bit
1 = Interrupt request enabled
0 = Interrupt request not enabled

bit 9 **OC3IE:** Output Compare Channel 3 Interrupt Enable bit
1 = Interrupt request enabled
0 = Interrupt request not enabled

bit 8 **DMA2IE:** DMA Channel 2 Data Transfer Complete Interrupt Enable bit
1 = Interrupt request enabled
0 = Interrupt request not enabled

bit 7 **IC8IE:** Input Capture Channel 8 Interrupt Enable bit
1 = Interrupt request enabled
0 = Interrupt request not enabled

bit 6 **IC7IE:** Input Capture Channel 7 Interrupt Enable bit
1 = Interrupt request enabled
0 = Interrupt request not enabled

bit 5 **AD2IE:** ADC2 Conversion Complete Interrupt Enable bit
1 = Interrupt request enabled
0 = Interrupt request not enabled

bit 4 **INT1IE:** External Interrupt 1 Enable bit
1 = Interrupt request enabled
0 = Interrupt request not enabled

© 2009-2012 Microchip Technology Inc.

REGISTER 7-11: IEC1: INTERRUPT ENABLE CONTROL REGISTER 1 (CONTINUED)

bit 3	**CNIE:** Input Change Notification Interrupt Enable bit 1 = Interrupt request enabled 0 = Interrupt request not enabled
bit 2	**Unimplemented:** Read as '0'
bit 1	**MI2C1IE:** I2C1 Master Events Interrupt Enable bit 1 = Interrupt request enabled 0 = Interrupt request not enabled
bit 0	**SI2C1IE:** I2C1 Slave Events Interrupt Enable bit 1 = Interrupt request enabled 0 = Interrupt request not enabled

REGISTER 7-12: IEC2: INTERRUPT ENABLE CONTROL REGISTER 2

R/W-0	R/W-0	U-0	R/W-0	R/W-0	R/W-0	R/W-0	R/W-0
T6IE	DMA4IE	—	OC8IE	OC7IE	OC6IE	OC5IE	IC6IE
bit 15							bit 8

R/W-0	R/W-0	R/W-0	R/W-0	R/W-0	R/W-0	R/W-0	R/W-0
IC5IE	IC4IE	IC3IE	DMA3IE	C1IE	C1RXIE	SPI2IE	SPI2EIE
bit 7							bit 0

Legend:			
R = Readable bit	W = Writable bit	U = Unimplemented bit, read as ‘0’	
-n = Value at POR	‘1’ = Bit is set	‘0’ = Bit is cleared	x = Bit is unknown

bit 15 **T6IE:** Timer6 Interrupt Enable bit
1 = Interrupt request enabled
0 = Interrupt request not enabled

bit 14 **DMA4IE:** DMA Channel 4 Data Transfer Complete Interrupt Enable bit
1 = Interrupt request enabled
0 = Interrupt request not enabled

bit 13 **Unimplemented:** Read as ‘0’

bit 12 **OC8IE:** Output Compare Channel 8 Interrupt Enable bit
1 = Interrupt request enabled
0 = Interrupt request not enabled

bit 11 **OC7IE:** Output Compare Channel 7 Interrupt Enable bit
1 = Interrupt request enabled
0 = Interrupt request not enabled

bit 10 **OC6IE:** Output Compare Channel 6 Interrupt Enable bit
1 = Interrupt request enabled
0 = Interrupt request not enabled

bit 9 **OC5IE:** Output Compare Channel 5 Interrupt Enable bit
1 = Interrupt request enabled
0 = Interrupt request not enabled

bit 8 **IC6IE:** Input Capture Channel 6 Interrupt Enable bit
1 = Interrupt request enabled
0 = Interrupt request not enabled

bit 7 **IC5IE:** Input Capture Channel 5 Interrupt Enable bit
1 = Interrupt request enabled
0 = Interrupt request not enabled

bit 6 **IC4IE:** Input Capture Channel 4 Interrupt Enable bit
1 = Interrupt request enabled
0 = Interrupt request not enabled

bit 5 **IC3IE:** Input Capture Channel 3 Interrupt Enable bit
1 = Interrupt request enabled
0 = Interrupt request not enabled

bit 4 **DMA3IE:** DMA Channel 3 Data Transfer Complete Interrupt Enable bit
1 = Interrupt request enabled
0 = Interrupt request not enabled

bit 3 **C1IE:** ECAN1 Event Interrupt Enable bit
1 = Interrupt request enabled
0 = Interrupt request not enabled

© 2009-2012 Microchip Technology Inc.

REGISTER 7-12: IEC2: INTERRUPT ENABLE CONTROL REGISTER 2 (CONTINUED)

bit 2	**C1RXIE:** ECAN1 Receive Data Ready Interrupt Enable bit 1 = Interrupt request enabled 0 = Interrupt request not enabled
bit 1	**SPI2IE:** SPI2 Event Interrupt Enable bit 1 = Interrupt request enabled 0 = Interrupt request not enabled
bit 0	**SPI2EIE:** SPI2 Error Interrupt Enable bit 1 = Interrupt request enabled 0 = Interrupt request not enabled

REGISTER 7-13: IEC3: INTERRUPT ENABLE CONTROL REGISTER 3

U-0	U-0	R/W-0	R/W-0	R/W-0	U-0	U-0	R/W-0
—	—	DMA5IE	DCIIE	DCIEIE	—	—	C2IE
bit 15							bit 8

R/W-0	R/W-0	R/W-0	R/W-0	R/W-0	R/W-0	R/W-0	R/W-0
C2RXIE	INT4IE	INT3IE	T9IE	T8IE	MI2C2IE	SI2C2IE	T7IE
bit 7							bit 0

Legend:			
R = Readable bit	W = Writable bit	U = Unimplemented bit, read as ‘0’	
-n = Value at POR	‘1’ = Bit is set	‘0’ = Bit is cleared	x = Bit is unknown

bit 15-14 **Unimplemented:** Read as ‘0’

bit 13 **DMA5IE:** DMA Channel 5 Data Transfer Complete Interrupt Enable bit
1 = Interrupt request enabled
0 = Interrupt request not enabled

bit 12 **DCIIE:** DCI Event Interrupt Enable bit
1 = Interrupt request enabled
0 = Interrupt request not enabled

bit 11 **DCIEIE:** DCI Error Interrupt Enable bit
1 = Interrupt request enabled
0 = Interrupt request not enabled

bit 10-9 **Unimplemented:** Read as ‘0’

bit 8 **C2IE:** ECAN2 Event Interrupt Enable bit
1 = Interrupt request enabled
0 = Interrupt request not enabled

bit 7 **C2RXIE:** ECAN2 Receive Data Ready Interrupt Enable bit
1 = Interrupt request enabled
0 = Interrupt request not enabled

bit 6 **INT4IE:** External Interrupt 4 Enable bit
1 = Interrupt request enabled
0 = Interrupt request not enabled

bit 5 **INT3IE:** External Interrupt 3 Enable bit
1 = Interrupt request enabled
0 = Interrupt request not enabled

bit 4 **T9IE:** Timer9 Interrupt Enable bit
1 = Interrupt request enabled
0 = Interrupt request not enabled

bit 3 **T8IE:** Timer8 Interrupt Enable bit
1 = Interrupt request enabled
0 = Interrupt request not enabled

bit 2 **MI2C2IE:** I2C2 Master Events Interrupt Enable bit
1 = Interrupt request enabled
0 = Interrupt request not enabled

bit 1 **SI2C2IE:** I2C2 Slave Events Interrupt Enable bit
1 = Interrupt request enabled
0 = Interrupt request not enabled

bit 0 **T7IE:** Timer7 Interrupt Enable bit
1 = Interrupt request enabled
0 = Interrupt request not enabled

© 2009-2012 Microchip Technology Inc.

REGISTER 7-14: IEC4: INTERRUPT ENABLE CONTROL REGISTER 4

U-0	U-0	U-0	U-0	U-0	U-0	U-0	U-0
—	—	—	—	—	—	—	—
bit 15							bit 8

R/W-0	R/W-0	R/W-0	R/W-0	U-0	R/W-0	R/W-0	U-0
C2TXIE	C1TXIE	DMA7IE	DMA6IE	—	U2EIE	U1EIE	—
bit 7							bit 0

Legend:			
R = Readable bit	W = Writable bit	U = Unimplemented bit, read as ‘0’	
-n = Value at POR	‘1’ = Bit is set	‘0’ = Bit is cleared	x = Bit is unknown

bit 15-8 **Unimplemented:** Read as ‘0’

bit 7 **C2TXIE:** ECAN2 Transmit Data Request Interrupt Enable bit
1 = Interrupt request enabled
0 = Interrupt request not enabled

bit 6 **C1TXIE:** ECAN1 Transmit Data Request Interrupt Enable bit
1 = Interrupt request enabled
0 = Interrupt request not enabled

bit 5 **DMA7IE:** DMA Channel 7 Data Transfer Complete Enable Status bit
1 = Interrupt request enabled
0 = Interrupt request not enabled

bit 4 **DMA6IE:** DMA Channel 6 Data Transfer Complete Enable Status bit
1 = Interrupt request enabled
0 = Interrupt request not enabled

bit 3 **Unimplemented:** Read as ‘0’

bit 2 **U2EIE:** UART2 Error Interrupt Enable bit
1 = Interrupt request enabled
0 = Interrupt request not enabled

bit 1 **U1EIE:** UART1 Error Interrupt Enable bit
1 = Interrupt request enabled
0 = Interrupt request not enabled

bit 0 **Unimplemented:** Read as ‘0’

REGISTER 7-15: IPC0: INTERRUPT PRIORITY CONTROL REGISTER 0

U-0	R/W-1	R/W-0	R/W-0	U-0	R/W-1	R/W-0	R/W-0
—	T1IP<2:0>			—	OC1IP<2:0>		
bit 15							bit 8

U-0	R/W-1	R/W-0	R/W-0	U-0	R/W-1	R/W-0	R/W-0
—	IC1IP<2:0>			—	INT0IP<2:0>		
bit 7							bit 0

Legend:			
R = Readable bit	W = Writable bit	U = Unimplemented bit, read as ‘0’	
-n = Value at POR	‘1’ = Bit is set	‘0’ = Bit is cleared	x = Bit is unknown

bit 15 **Unimplemented:** Read as ‘0’

bit 14-12 **T1IP<2:0>:** Timer1 Interrupt Priority bits
111 = Interrupt is priority 7 (highest priority interrupt)
•
•
•
001 = Interrupt is priority 1
000 = Interrupt source is disabled

bit 11 **Unimplemented:** Read as ‘0’

bit 10-8 **OC1IP<2:0>:** Output Compare Channel 1 Interrupt Priority bits
111 = Interrupt is priority 7 (highest priority interrupt)
•
•
•
001 = Interrupt is priority 1
000 = Interrupt source is disabled

bit 7 **Unimplemented:** Read as ‘0’

bit 6-4 **IC1IP<2:0>:** Input Capture Channel 1 Interrupt Priority bits
111 = Interrupt is priority 7 (highest priority interrupt)
•
•
•
001 = Interrupt is priority 1
000 = Interrupt source is disabled

bit 3 **Unimplemented:** Read as ‘0’

bit 2-0 **INT0IP<2:0>:** External Interrupt 0 Priority bits
111 = Interrupt is priority 7 (highest priority interrupt)
•
•
•
001 = Interrupt is priority 1
000 = Interrupt source is disabled

© 2009-2012 Microchip Technology Inc.

REGISTER 7-16: IPC1: INTERRUPT PRIORITY CONTROL REGISTER 1

U-0	R/W-1	R/W-0	R/W-0	U-0	R/W-1	R/W-0	R/W-0
—	T2IP<2:0>			—	OC2IP<2:0>		
bit 15							bit 8

U-0	R/W-1	R/W-0	R/W-0	U-0	R/W-1	R/W-0	R/W-0
—	IC2IP<2:0>			—	DMA0IP<2:0>		
bit 7							bit 0

Legend:			
R = Readable bit	W = Writable bit	U = Unimplemented bit, read as ‘0’	
-n = Value at POR	‘1’ = Bit is set	‘0’ = Bit is cleared	x = Bit is unknown

bit 15 **Unimplemented:** Read as ‘0’

bit 14-12 **T2IP<2:0>:** Timer2 Interrupt Priority bits
111 = Interrupt is priority 7 (highest priority interrupt)
•
•
•
001 = Interrupt is priority 1
000 = Interrupt source is disabled

bit 11 **Unimplemented:** Read as ‘0’

bit 10-8 **OC2IP<2:0>:** Output Compare Channel 2 Interrupt Priority bits
111 = Interrupt is priority 7 (highest priority interrupt)
•
•
•
001 = Interrupt is priority 1
000 = Interrupt source is disabled

bit 7 **Unimplemented:** Read as ‘0’

bit 6-4 **IC2IP<2:0>:** Input Capture Channel 2 Interrupt Priority bits
111 = Interrupt is priority 7 (highest priority interrupt)
•
•
•
001 = Interrupt is priority 1
000 = Interrupt source is disabled

bit 3 **Unimplemented:** Read as ‘0’

bit 2-0 **DMA0IP<2:0>:** DMA Channel 0 Data Transfer Complete Interrupt Priority bits
111 = Interrupt is priority 7 (highest priority interrupt)
•
•
•
001 = Interrupt is priority 1
000 = Interrupt source is disabled

REGISTER 7-17: IPC2: INTERRUPT PRIORITY CONTROL REGISTER 2

U-0	R/W-1	R/W-0	R/W-0	U-0	R/W-1	R/W-0	R/W-0
—	U1RXIP<2:0>			—	SPI1IP<2:0>		
bit 15							bit 8

U-0	R/W-1	R/W-0	R/W-0	U-0	R/W-1	R/W-0	R/W-0
—	SPI1EIP<2:0>			—	T3IP<2:0>		
bit 7							bit 0

Legend:			
R = Readable bit	W = Writable bit	U = Unimplemented bit, read as ‘0’	
-n = Value at POR	‘1’ = Bit is set	‘0’ = Bit is cleared	x = Bit is unknown

bit 15 **Unimplemented:** Read as ‘0’

bit 14-12 **U1RXIP<2:0>:** UART1 Receiver Interrupt Priority bits
111 = Interrupt is priority 7 (highest priority interrupt)
•
•
•
001 = Interrupt is priority 1
000 = Interrupt source is disabled

bit 11 **Unimplemented:** Read as ‘0’

bit 10-8 **SPI1IP<2:0>:** SPI1 Event Interrupt Priority bits
111 = Interrupt is priority 7 (highest priority interrupt)
•
•
•
001 = Interrupt is priority 1
000 = Interrupt source is disabled

bit 7 **Unimplemented:** Read as ‘0’

bit 6-4 **SPI1EIP<2:0>:** SPI1 Error Interrupt Priority bits
111 = Interrupt is priority 7 (highest priority interrupt)
•
•
•
001 = Interrupt is priority 1
000 = Interrupt source is disabled

bit 3 **Unimplemented:** Read as ‘0’

bit 2-0 **T3IP<2:0>:** Timer3 Interrupt Priority bits
111 = Interrupt is priority 7 (highest priority interrupt)
•
•
•
001 = Interrupt is priority 1
000 = Interrupt source is disabled

© 2009-2012 Microchip Technology Inc.

REGISTER 7-18: IPC3: INTERRUPT PRIORITY CONTROL REGISTER 3

U-0	U-0	U-0	U-0	U-0	R/W-1	R/W-0	R/W-0
—	—	—	—	—	DMA1IP<2:0>		
bit 15							bit 8

U-0	R/W-1	R/W-0	R/W-0	U-0	R/W-1	R/W-0	R/W-0
—	AD1IP<2:0>			—	U1TXIP<2:0>		
bit 7							bit 0

Legend:			
R = Readable bit	W = Writable bit	U = Unimplemented bit, read as ‘0’	
-n = Value at POR	‘1’ = Bit is set	‘0’ = Bit is cleared	x = Bit is unknown

bit 15-11 **Unimplemented:** Read as ‘0’

bit 10-8 **DMA1IP<2:0>:** DMA Channel 1 Data Transfer Complete Interrupt Priority bits
111 = Interrupt is priority 7 (highest priority interrupt)
•
•
•
001 = Interrupt is priority 1
000 = Interrupt source is disabled

bit 7 **Unimplemented:** Read as ‘0’

bit 6-4 **AD1IP<2:0>:** ADC1 Conversion Complete Interrupt Priority bits
111 = Interrupt is priority 7 (highest priority interrupt)
•
•
•
001 = Interrupt is priority 1
000 = Interrupt source is disabled

bit 3 **Unimplemented:** Read as ‘0’

bit 2-0 **U1TXIP<2:0>:** UART1 Transmitter Interrupt Priority bits
111 = Interrupt is priority 7 (highest priority interrupt)
•
•
•
001 = Interrupt is priority 1
000 = Interrupt source is disabled

REGISTER 7-19: IPC4: INTERRUPT PRIORITY CONTROL REGISTER 4

U-0	R/W-1	R/W-0	R/W-0	U-0	U-0	U-0	U-0
—	CNIP<2:0>			—	—	—	—
bit 15							bit 8

U-0	R/W-1	R/W-0	R/W-0	U-0	R/W-1	R/W-0	R/W-0
—	MI2C1IP<2:0>			—	SI2C1IP<2:0>		
bit 7							bit 0

Legend:			
R = Readable bit	W = Writable bit	U = Unimplemented bit, read as ‘0’	
-n = Value at POR	‘1’ = Bit is set	‘0’ = Bit is cleared	x = Bit is unknown

bit 15 **Unimplemented:** Read as ‘0’

bit 14-12 **CNIP<2:0>:** Change Notification Interrupt Priority bits
111 = Interrupt is priority 7 (highest priority interrupt)
•
•
•
001 = Interrupt is priority 1
000 = Interrupt source is disabled

bit 11-7 **Unimplemented:** Read as ‘0’

bit 6-4 **MI2C1IP<2:0>:** I2C1 Master Events Interrupt Priority bits
111 = Interrupt is priority 7 (highest priority interrupt)
•
•
•
001 = Interrupt is priority 1
000 = Interrupt source is disabled

bit 3 **Unimplemented:** Read as ‘0’

bit 2-0 **SI2C1IP<2:0>:** I2C1 Slave Events Interrupt Priority bits
111 = Interrupt is priority 7 (highest priority interrupt)
•
•
•
001 = Interrupt is priority 1
000 = Interrupt source is disabled

© 2009-2012 Microchip Technology Inc.

REGISTER 7-20: IPC5: INTERRUPT PRIORITY CONTROL REGISTER 5

U-0	R/W-1	R/W-0	R/W-0	U-0	R/W-1	R/W-0	R/W-0
—	IC8IP<2:0>			—	IC7IP<2:0>		
bit 15							bit 8

U-0	R/W-1	R/W-0	R/W-0	U-0	R/W-1	R/W-0	R/W-0
—	AD2IP<2:0>			—	INT1IP<2:0>		
bit 7							bit 0

Legend:			
R = Readable bit	W = Writable bit	U = Unimplemented bit, read as ‘0’	
-n = Value at POR	‘1’ = Bit is set	‘0’ = Bit is cleared	x = Bit is unknown

bit 15 **Unimplemented:** Read as ‘0’

bit 14-12 **IC8IP<2:0>:** Input Capture Channel 8 Interrupt Priority bits
111 = Interrupt is priority 7 (highest priority interrupt)
•
•
•
001 = Interrupt is priority 1
000 = Interrupt source is disabled

bit 11 **Unimplemented:** Read as ‘0’

bit 10-8 **IC7IP<2:0>:** Input Capture Channel 7 Interrupt Priority bits
111 = Interrupt is priority 7 (highest priority interrupt)
•
•
•
001 = Interrupt is priority 1
000 = Interrupt source is disabled

bit 7 **Unimplemented:** Read as ‘0’

bit 6-4 **AD2IP<2:0>:** ADC2 Conversion Complete Interrupt Priority bits
111 = Interrupt is priority 7 (highest priority interrupt)
•
•
•
001 = Interrupt is priority 1
000 = Interrupt source is disabled

bit 3 **Unimplemented:** Read as ‘0’

bit 2-0 **INT1IP<2:0>:** External Interrupt 1 Priority bits
111 = Interrupt is priority 7 (highest priority interrupt)
•
•
•
001 = Interrupt is priority 1
000 = Interrupt source is disabled

REGISTER 7-21: IPC6: INTERRUPT PRIORITY CONTROL REGISTER 6

U-0	R/W-1	R/W-0	R/W-0	U-0	R/W-1	R/W-0	R/W-0
—	T4IP<2:0>			—	OC4IP<2:0>		
bit 15							bit 8

U-0	R/W-1	R/W-0	R/W-0	U-0	R/W-1	R/W-0	R/W-0
—	OC3IP<2:0>			—	DMA2IP<2:0>		
bit 7							bit 0

Legend:			
R = Readable bit	W = Writable bit	U = Unimplemented bit, read as ‘0’	
-n = Value at POR	‘1’ = Bit is set	‘0’ = Bit is cleared	x = Bit is unknown

bit 15 **Unimplemented:** Read as ‘0’

bit 14-12 **T4IP<2:0>:** Timer4 Interrupt Priority bits
111 = Interrupt is priority 7 (highest priority interrupt)
•
•
•
001 = Interrupt is priority 1
000 = Interrupt source is disabled

bit 11 **Unimplemented:** Read as ‘0’

bit 10-8 **OC4IP<2:0>:** Output Compare Channel 4 Interrupt Priority bits
111 = Interrupt is priority 7 (highest priority interrupt)
•
•
•
001 = Interrupt is priority 1
000 = Interrupt source is disabled

bit 7 **Unimplemented:** Read as ‘0’

bit 6-4 **OC3IP<2:0>:** Output Compare Channel 3 Interrupt Priority bits
111 = Interrupt is priority 7 (highest priority interrupt)
•
•
•
001 = Interrupt is priority 1
000 = Interrupt source is disabled

bit 3 **Unimplemented:** Read as ‘0’

bit 2-0 **DMA2IP<2:0>:** DMA Channel 2 Data Transfer Complete Interrupt Priority bits
111 = Interrupt is priority 7 (highest priority interrupt)
•
•
•
001 = Interrupt is priority 1
000 = Interrupt source is disabled

© 2009-2012 Microchip Technology Inc.

REGISTER 7-22: IPC7: INTERRUPT PRIORITY CONTROL REGISTER 7

U-0	R/W-1	R/W-0	R/W-0	U-0	R/W-1	R/W-0	R/W-0
—	U2TXIP<2:0>			—	U2RXIP<2:0>		
bit 15							bit 8

U-0	R/W-1	R/W-0	R/W-0	U-0	R/W-1	R/W-0	R/W-0
—	INT2IP<2:0>			—	T5IP<2:0>		
bit 7							bit 0

Legend:			
R = Readable bit	W = Writable bit	U = Unimplemented bit, read as ‘0’	
-n = Value at POR	‘1’ = Bit is set	‘0’ = Bit is cleared	x = Bit is unknown

bit 15 **Unimplemented:** Read as ‘0’

bit 14-12 **U2TXIP<2:0>:** UART2 Transmitter Interrupt Priority bits
111 = Interrupt is priority 7 (highest priority interrupt)
•
•
•
001 = Interrupt is priority 1
000 = Interrupt source is disabled

bit 11 **Unimplemented:** Read as ‘0’

bit 10-8 **U2RXIP<2:0>:** UART2 Receiver Interrupt Priority bits
111 = Interrupt is priority 7 (highest priority interrupt)
•
•
•
001 = Interrupt is priority 1
000 = Interrupt source is disabled

bit 7 **Unimplemented:** Read as ‘0’

bit 6-4 **INT2IP<2:0>:** External Interrupt 2 Priority bits
111 = Interrupt is priority 7 (highest priority interrupt)
•
•
•
001 = Interrupt is priority 1
000 = Interrupt source is disabled

bit 3 **Unimplemented:** Read as ‘0’

bit 2-0 **T5IP<2:0>:** Timer5 Interrupt Priority bits
111 = Interrupt is priority 7 (highest priority interrupt)
•
•
•
001 = Interrupt is priority 1
000 = Interrupt source is disabled

REGISTER 7-23: IPC8: INTERRUPT PRIORITY CONTROL REGISTER 8

U-0	R/W-1	R/W-0	R/W-0	U-0	R/W-1	R/W-0	R/W-0
—	C1IP<2:0>			—	C1RXIP<2:0>		
bit 15							bit 8

U-0	R/W-1	R/W-0	R/W-0	U-0	R/W-1	R/W-0	R/W-0
—	SPI2IP<2:0>			—	SPI2EIP<2:0>		
bit 7							bit 0

Legend:			
R = Readable bit	W = Writable bit	U = Unimplemented bit, read as ‘0’	
-n = Value at POR	‘1’ = Bit is set	‘0’ = Bit is cleared	x = Bit is unknown

bit 15 **Unimplemented:** Read as ‘0’

bit 14-12 **C1IP<2:0>:** ECAN1 Event Interrupt Priority bits
111 = Interrupt is priority 7 (highest priority interrupt)
•
•
•
001 = Interrupt is priority 1
000 = Interrupt source is disabled

bit 11 **Unimplemented:** Read as ‘0’

bit 10-8 **C1RXIP<2:0>:** ECAN1 Receive Data Ready Interrupt Priority bits
111 = Interrupt is priority 7 (highest priority interrupt)
•
•
•
001 = Interrupt is priority 1
000 = Interrupt source is disabled

bit 7 **Unimplemented:** Read as ‘0’

bit 6-4 **SPI2IP<2:0>:** SPI2 Event Interrupt Priority bits
111 = Interrupt is priority 7 (highest priority interrupt)
•
•
•
001 = Interrupt is priority 1
000 = Interrupt source is disabled

bit 3 **Unimplemented:** Read as ‘0’

bit 2-0 **SPI2EIP<2:0>:** SPI2 Error Interrupt Priority bits
111 = Interrupt is priority 7 (highest priority interrupt)
•
•
•
001 = Interrupt is priority 1
000 = Interrupt source is disabled

© 2009-2012 Microchip Technology Inc.

REGISTER 7-24: IPC9: INTERRUPT PRIORITY CONTROL REGISTER 9

U-0	R/W-1	R/W-0	R/W-0	U-0	R/W-1	R/W-0	R/W-0
—	IC5IP<2:0>			—	IC4IP<2:0>		
bit 15							bit 8

U-0	R/W-1	R/W-0	R/W-0	U-0	R/W-1	R/W-0	R/W-0
—	IC3IP<2:0>			—	DMA3IP<2:0>		
bit 7							bit 0

Legend:			
R = Readable bit	W = Writable bit	U = Unimplemented bit, read as ‘0’	
-n = Value at POR	‘1’ = Bit is set	‘0’ = Bit is cleared	x = Bit is unknown

bit 15 **Unimplemented:** Read as ‘0’

bit 14-12 **IC5IP<2:0>:** Input Capture Channel 5 Interrupt Priority bits
111 = Interrupt is priority 7 (highest priority interrupt)
•
•
•
001 = Interrupt is priority 1
000 = Interrupt source is disabled

bit 11 **Unimplemented:** Read as ‘0’

bit 10-8 **IC4IP<2:0>:** Input Capture Channel 4 Interrupt Priority bits
111 = Interrupt is priority 7 (highest priority interrupt)
•
•
•
001 = Interrupt is priority 1
000 = Interrupt source is disabled

bit 7 **Unimplemented:** Read as ‘0’

bit 6-4 **IC3IP<2:0>:** Input Capture Channel 3 Interrupt Priority bits
111 = Interrupt is priority 7 (highest priority interrupt)
•
•
•
001 = Interrupt is priority 1
000 = Interrupt source is disabled

bit 3 **Unimplemented:** Read as ‘0’

bit 2-0 **DMA3IP<2:0>:** DMA Channel 3 Data Transfer Complete Interrupt Priority bits
111 = Interrupt is priority 7 (highest priority interrupt)
•
•
•
001 = Interrupt is priority 1
000 = Interrupt source is disabled

REGISTER 7-25: IPC10: INTERRUPT PRIORITY CONTROL REGISTER 10

U-0	R/W-1	R/W-0	R/W-0	U-0	R/W-1	R/W-0	R/W-0
—	OC7IP<2:0>			—	OC6IP<2:0>		
bit 15							bit 8

U-0	R/W-1	R/W-0	R/W-0	U-0	R/W-1	R/W-0	R/W-0
—	OC5IP<2:0>			—	IC6IP<2:0>		
bit 7							bit 0

Legend:			
R = Readable bit	W = Writable bit	U = Unimplemented bit, read as ‘0’	
-n = Value at POR	‘1’ = Bit is set	‘0’ = Bit is cleared	x = Bit is unknown

bit 15 **Unimplemented:** Read as ‘0’

bit 14-12 **OC7IP<2:0>:** Output Compare Channel 7 Interrupt Priority bits
111 = Interrupt is priority 7 (highest priority interrupt)
•
•
•
001 = Interrupt is priority 1
000 = Interrupt source is disabled

bit 11 **Unimplemented:** Read as ‘0’

bit 10-8 **OC6IP<2:0>:** Output Compare Channel 6 Interrupt Priority bits
111 = Interrupt is priority 7 (highest priority interrupt)
•
•
•
001 = Interrupt is priority 1
000 = Interrupt source is disabled

bit 7 **Unimplemented:** Read as ‘0’

bit 6-4 **OC5IP<2:0>:** Output Compare Channel 5 Interrupt Priority bits
111 = Interrupt is priority 7 (highest priority interrupt)
•
•
•
001 = Interrupt is priority 1
000 = Interrupt source is disabled

bit 3 **Unimplemented:** Read as ‘0’

bit 2-0 **IC6IP<2:0>:** Input Capture Channel 6 Interrupt Priority bits
111 = Interrupt is priority 7 (highest priority interrupt)
•
•
•
001 = Interrupt is priority 1
000 = Interrupt source is disabled

© 2009-2012 Microchip Technology Inc.

REGISTER 7-26: IPC11: INTERRUPT PRIORITY CONTROL REGISTER 11

U-0	R/W-1	R/W-0	R/W-0	U-0	R/W-1	R/W-0	R/W-0
—	T6IP<2:0>			—	DMA4IP<2:0>		
bit 15							bit 8

U-0	U-0	U-0	U-0	U-0	R/W-1	R/W-0	R/W-0
—	—	—	—	—	OC8IP<2:0>		
bit 7							bit 0

Legend:			
R = Readable bit	W = Writable bit	U = Unimplemented bit, read as ‘0’	
-n = Value at POR	‘1’ = Bit is set	‘0’ = Bit is cleared	x = Bit is unknown

bit 15 **Unimplemented:** Read as ‘0’

bit 14-12 **T6IP<2:0>:** Timer6 Interrupt Priority bits
111 = Interrupt is priority 7 (highest priority interrupt)
•
•
•
001 = Interrupt is priority 1
000 = Interrupt source is disabled

bit 11 **Unimplemented:** Read as ‘0’

bit 10-8 **DMA4IP<2:0>:** DMA Channel 4 Data Transfer Complete Interrupt Priority bits
111 = Interrupt is priority 7 (highest priority interrupt)
•
•
•
001 = Interrupt is priority 1
000 = Interrupt source is disabled

bit 7-3 **Unimplemented:** Read as ‘0’

bit 2-0 **OC8IP<2:0>:** Output Compare Channel 8 Interrupt Priority bits
111 = Interrupt is priority 7 (highest priority interrupt)
•
•
•
001 = Interrupt is priority 1
000 = Interrupt source is disabled

REGISTER 7-27: IPC12: INTERRUPT PRIORITY CONTROL REGISTER 12

U-0	R/W-1	R/W-0	R/W-0	U-0	R/W-1	R/W-0	R/W-0
—	T8IP<2:0>			—	MI2C2IP<2:0>		
bit 15							bit 8

U-0	R/W-1	R/W-0	R/W-0	U-0	R/W-1	R/W-0	R/W-0
—	SI2C2IP<2:0>			—	T7IP<2:0>		
bit 7							bit 0

Legend:			
R = Readable bit	W = Writable bit	U = Unimplemented bit, read as ‘0’	
-n = Value at POR	‘1’ = Bit is set	‘0’ = Bit is cleared	x = Bit is unknown

bit 15 **Unimplemented:** Read as ‘0’

bit 14-12 **T8IP<2:0>:** Timer8 Interrupt Priority bits
111 = Interrupt is priority 7 (highest priority interrupt)
•
•
•
001 = Interrupt is priority 1
000 = Interrupt source is disabled

bit 11 **Unimplemented:** Read as ‘0’

bit 10-8 **MI2C2IP<2:0>:** I2C2 Master Events Interrupt Priority bits
111 = Interrupt is priority 7 (highest priority interrupt)
•
•
•
001 = Interrupt is priority 1
000 = Interrupt source is disabled

bit 7 **Unimplemented:** Read as ‘0’

bit 6-4 **SI2C2IP<2:0>:** I2C2 Slave Events Interrupt Priority bits
111 = Interrupt is priority 7 (highest priority interrupt)
•
•
•
001 = Interrupt is priority 1
000 = Interrupt source is disabled

bit 3 **Unimplemented:** Read as ‘0’

bit 2-0 **T7IP<2:0>:** Timer7 Interrupt Priority bits
111 = Interrupt is priority 7 (highest priority interrupt)
•
•
•
001 = Interrupt is priority 1
000 = Interrupt source is disabled

© 2009-2012 Microchip Technology Inc.

REGISTER 7-28: IPC13: INTERRUPT PRIORITY CONTROL REGISTER 13

U-0	R/W-1	R/W-0	R/W-0	U-0	R/W-1	R/W-0	R/W-0
—	C2RXIP<2:0>			—	INT4IP<2:0>		
bit 15							bit 8

U-0	R/W-1	R/W-0	R/W-0	U-0	R/W-1	R/W-0	R/W-0
—	INT3IP<2:0>			—	T9IP<2:0>		
bit 7							bit 0

Legend:			
R = Readable bit	W = Writable bit	U = Unimplemented bit, read as ‘0’	
-n = Value at POR	‘1’ = Bit is set	‘0’ = Bit is cleared	x = Bit is unknown

bit 15 **Unimplemented:** Read as ‘0’

bit 14-12 **C2RXIP<2:0>:** ECAN2 Receive Data Ready Interrupt Priority bits
111 = Interrupt is priority 7 (highest priority interrupt)
•
•
•
001 = Interrupt is priority 1
000 = Interrupt source is disabled

bit 11 **Unimplemented:** Read as ‘0’

bit 10-8 **INT4IP<2:0>:** External Interrupt 4 Priority bits
111 = Interrupt is priority 7 (highest priority interrupt)
•
•
•
001 = Interrupt is priority 1
000 = Interrupt source is disabled

bit 7 **Unimplemented:** Read as ‘0’

bit 6-4 **INT3IP<2:0>:** External Interrupt 3 Priority bits
111 = Interrupt is priority 7 (highest priority interrupt)
•
•
•
001 = Interrupt is priority 1
000 = Interrupt source is disabled

bit 3 **Unimplemented:** Read as ‘0’

bit 2-0 **T9IP<2:0>:** Timer9 Interrupt Priority bits
111 = Interrupt is priority 7 (highest priority interrupt)
•
•
•
001 = Interrupt is priority 1
000 = Interrupt source is disabled

REGISTER 7-29: IPC14: INTERRUPT PRIORITY CONTROL REGISTER 14

U-0	R/W-1	R/W-0	R/W-0	U-0	U-0	U-0	U-0
—	DCIEIP<2:0>			—	—	—	—
bit 15							bit 8

U-0	U-0	U-0	U-0	U-0	R/W-1	R/W-0	R/W-0
—	—	—	—	—	C2IP<2:0>		
bit 7							bit 0

Legend:			
R = Readable bit	W = Writable bit	U = Unimplemented bit, read as ‘0’	
-n = Value at POR	‘1’ = Bit is set	‘0’ = Bit is cleared	x = Bit is unknown

bit 15 **Unimplemented:** Read as ‘0’

bit 14-12 **DCIEIP<2:0>:** DCI Error Interrupt Priority bits
111 = Interrupt is priority 7 (highest priority interrupt)
•
•
•
001 = Interrupt is priority 1
000 = Interrupt source is disabled

bit 11-3 **Unimplemented:** Read as ‘0’

bit 2-0 **C2IP<2:0>:** ECAN2 Event Interrupt Priority bits
111 = Interrupt is priority 7 (highest priority interrupt)
•
•
•
001 = Interrupt is priority 1
000 = Interrupt source is disabled

© 2009-2012 Microchip Technology Inc.

REGISTER 7-30: IPC15: INTERRUPT PRIORITY CONTROL REGISTER 15

U-0	U-0	U-0	U-0	U-0	U-0	U-0	U-0
—	—	—	—	—	—	—	—
bit 15							bit 8

U-0	R/W-1	R/W-0	R/W-0	U-0	R/W-1	R/W-0	R/W-0
—	DMA5IP<2:0>			—	DCIIP<2:0>		
bit 7							bit 0

Legend:			
R = Readable bit	W = Writable bit	U = Unimplemented bit, read as ‘0’	
-n = Value at POR	‘1’ = Bit is set	‘0’ = Bit is cleared	x = Bit is unknown

bit 15-7 **Unimplemented:** Read as ‘0’

bit 6-4 **DMA5IP<2:0>:** DMA Channel 5 Data Transfer Complete Interrupt Priority bits
111 = Interrupt is priority 7 (highest priority interrupt)
•
•
•
001 = Interrupt is priority 1
000 = Interrupt source is disabled

bit 3 **Unimplemented:** Read as ‘0’

bit 2-0 **DCIIP<2:0>:** DCI Event Interrupt Priority bits
111 = Interrupt is priority 7 (highest priority interrupt)
•
•
•
001 = Interrupt is priority 1
000 = Interrupt source is disabled

REGISTER 7-31: IPC16: INTERRUPT PRIORITY CONTROL REGISTER 16

U-0	U-0	U-0	U-0	U-0	R/W-1	R/W-0	R/W-0
—	—	—	—	—	U2EIP<2:0>		
bit 15							bit 8

U-0	R/W-1	R/W-0	R/W-0	U-0	U-0	U-0	U-0
—	U1EIP<2:0>			—	—	—	—
bit 7							bit 0

Legend:			
R = Readable bit	W = Writable bit	U = Unimplemented bit, read as ‘0’	
-n = Value at POR	‘1’ = Bit is set	‘0’ = Bit is cleared	x = Bit is unknown

bit 15-11 **Unimplemented:** Read as ‘0’

bit 10-8 **U2EIP<2:0>:** UART2 Error Interrupt Priority bits
111 = Interrupt is priority 7 (highest priority interrupt)
•
•
•
001 = Interrupt is priority 1
000 = Interrupt source is disabled

bit 7 **Unimplemented:** Read as ‘0’

bit 6-4 **U1EIP<2:0>:** UART1 Error Interrupt Priority bits
111 = Interrupt is priority 7 (highest priority interrupt)
•
•
•
001 = Interrupt is priority 1
000 = Interrupt source is disabled

bit 3-0 **Unimplemented:** Read as ‘0’

© 2009-2012 Microchip Technology Inc.

REGISTER 7-32: IPC17: INTERRUPT PRIORITY CONTROL REGISTER 17

U-0	R/W-1	R/W-0	R/W-0	U-0	R/W-1	R/W-0	R/W-0
—	C2TXIP<2:0>			—	C1TXIP<2:0>		
bit 15							bit 8

U-0	R/W-1	R/W-0	R/W-0	U-0	R/W-1	R/W-0	R/W-0
—	DMA7IP<2:0>			—	DMA6IP<2:0>		
bit 7							bit 0

Legend:			
R = Readable bit	W = Writable bit	U = Unimplemented bit, read as ‘0’	
-n = Value at POR	‘1’ = Bit is set	‘0’ = Bit is cleared	x = Bit is unknown

bit 15 **Unimplemented:** Read as ‘0’

bit 14-12 **C2TXIP<2:0>:** ECAN2 Transmit Data Request Interrupt Priority bits
111 = Interrupt is priority 7 (highest priority interrupt)
•
•
•
001 = Interrupt is priority 1
000 = Interrupt source is disabled

bit 11 **Unimplemented:** Read as ‘0’

bit 10-8 **C1TXIP<2:0>:** ECAN1 Transmit Data Request Interrupt Priority bits
111 = Interrupt is priority 7 (highest priority interrupt)
•
•
•
001 = Interrupt is priority 1
000 = Interrupt source is disabled

bit 7 **Unimplemented:** Read as ‘0’

bit 6-4 **DMA7IP<2:0>:** DMA Channel 7 Data Transfer Complete Interrupt Priority bits
111 = Interrupt is priority 7 (highest priority interrupt)
•
•
•
001 = Interrupt is priority 1
000 = Interrupt source is disabled

bit 3 **Unimplemented:** Read as ‘0’

bit 2-0 **DMA6IP<2:0>:** DMA Channel 6 Data Transfer Complete Interrupt Priority bits
111 = Interrupt is priority 7 (highest priority interrupt)
•
•
•
001 = Interrupt is priority 1
000 = Interrupt source is disabled

REGISTER 7-33: INTTREG: INTERRUPT CONTROL AND STATUS REGISTER

U-0	U-0	U-0	U-0	R-0	R-0	R-0	R-0
—	—	—	—	ILR<3:0>			
bit 15							bit 8

U-0	R-0	R-0	R-0	R-0	R-0	R-0	R-0
—	VECNUM<6:0>						
bit 7							bit 0

Legend:			
R = Readable bit	W = Writable bit	U = Unimplemented bit, read as ‘0’	
-n = Value at POR	‘1’ = Bit is set	‘0’ = Bit is cleared	x = Bit is unknown

bit 15-12 **Unimplemented:** Read as ‘0’

bit 11-8 **ILR<3:0>:** New CPU Interrupt Priority Level bits
1111 = CPU Interrupt Priority Level is 15
•
•
•
0001 = CPU Interrupt Priority Level is 1
0000 = CPU Interrupt Priority Level is 0

bit 7 **Unimplemented:** Read as ‘0’

bit 6-0 **VECNUM<6:0>:** Vector Number of Pending Interrupt bits
0111111 = Interrupt Vector pending is number 135
•
•
•
0000001 = Interrupt Vector pending is number 9
0000000 = Interrupt Vector pending is number 8

© 2009-2012 Microchip Technology Inc.

7.4 Interrupt Setup Procedures

7.4.1 INITIALIZATION

To configure an interrupt source:

1. Set the NSTDIS bit (INTCON1<15>) if nested interrupts are not desired.
2. Select the user-assigned priority level for the interrupt source by writing the control bits in the appropriate IPCx register. The priority level will depend on the specific application and type of interrupt source. If multiple priority levels are not desired, the IPCx register control bits for all enabled interrupt sources may be programmed to the same non-zero value.

Note:	At a device Reset, the IPCx registers are initialized, such that all user interrupt sources are assigned to priority level 4.

3. Clear the interrupt flag status bit associated with the peripheral in the associated IFSx register.
4. Enable the interrupt source by setting the interrupt enable control bit associated with the source in the appropriate IECx register.

7.4.2 INTERRUPT SERVICE ROUTINE

The method that is used to declare an ISR and initialize the IVT with the correct vector address will depend on the programming language (i.e., C or assembler) and the language development toolsuite that is used to develop the application. In general, the user must clear the interrupt flag in the appropriate IFSx register for the source of interrupt that the ISR handles. Otherwise, the ISR will be re-entered immediately after exiting the routine. If the ISR is coded in assembly language, it must be terminated using a `RETFIE` instruction to unstack the saved PC value, SRL value and old CPU priority level.

7.4.3 TRAP SERVICE ROUTINE

A Trap Service Routine (TSR) is coded like an ISR, except that the appropriate trap status flag in the INTCON1 register must be cleared to avoid re-entry into the TSR.

7.4.4 INTERRUPT DISABLE

All user interrupts can be disabled using the following procedure:

1. Push the current SR value onto the software stack using the `PUSH` instruction.
2. Force the CPU to priority level 7 by inclusive ORing the value OEh with SRL.

To enable user interrupts, the `POP` instruction may be used to restore the previous SR value.

Note that only user interrupts with a priority level of 7 or less can be disabled. Trap sources (level 8-level 15) cannot be disabled.

The `DISI` instruction provides a convenient way to disable interrupts of priority levels 1-6 for a fixed period of time. Level 7 interrupt sources are not disabled by the `DISI` instruction.

NOTES:

© 2009-2012 Microchip Technology Inc.

8.0 DIRECT MEMORY ACCESS (DMA)

Note 1: This data sheet summarizes the features of the dsPIC33FJXXXGPX06A/X08A/X10A family of devices. However, it is not intended to be a comprehensive reference source. To complement the information in this data sheet, refer to **Section 22. "Direct Memory Access (DMA)"** (DS70182) in the *"dsPIC33F/PIC24H Family Reference Manual"*, which is available from the Microchip web site (www.microchip.com).

2: Some registers and associated bits described in this section may not be available on all devices. Refer to **Section 4.0 "Memory Organization"** in this data sheet for device-specific register and bit information.

Direct Memory Access (DMA) is a very efficient mechanism of copying data between peripheral SFRs (e.g., UART Receive register, Input Capture 1 buffer), and buffers or variables stored in RAM, with minimal CPU intervention. The DMA controller can automatically copy entire blocks of data without requiring the user software to read or write the peripheral Special Function Registers (SFRs) every time a peripheral interrupt occurs. The DMA controller uses a dedicated bus for data transfers and therefore, does not steal cycles from the code execution flow of the CPU. To exploit the DMA capability, the corresponding user buffers or variables must be located in DMA RAM.

The dsPIC33FJXXXGPX06A/X08A/X10A peripherals that can utilize DMA are listed in Table 8-1 along with their associated Interrupt Request (IRQ) numbers.

TABLE 8-1: PERIPHERALS WITH DMA SUPPORT

Peripheral	IRQ Number
INT0	0
Input Capture 1	1
Input Capture 2	5
Output Compare 1	2
Output Compare 2	6
Timer2	7
Timer3	8
SPI1	10
SPI2	33
UART1 Reception	11
UART1 Transmission	12
UART2 Reception	30
UART2 Transmission	31
ADC1	13
ADC2	21
DCI	60
ECAN1 Reception	34
ECAN1 Transmission	70
ECAN2 Reception	55
ECAN2 Transmission	71

The DMA controller features eight identical data transfer channels.

Each channel has its own set of control and status registers. Each DMA channel can be configured to copy data either from buffers stored in dual port DMA RAM to peripheral SFRs, or from peripheral SFRs to buffers in DMA RAM.

The DMA controller supports the following features:

- Word or byte sized data transfers
- Transfers from peripheral to DMA RAM or DMA RAM to peripheral
- Indirect Addressing of DMA RAM locations with or without automatic post-increment
- Peripheral Indirect Addressing – In some peripherals, the DMA RAM read/write addresses may be partially derived from the peripheral
- One-Shot Block Transfers – Terminating DMA transfer after one block transfer
- Continuous Block Transfers – Reloading DMA RAM buffer start address after every block transfer is complete
- Ping-Pong Mode – Switching between two DMA RAM start addresses between successive block transfers, thereby filling two buffers alternately
- Automatic or manual initiation of block transfers
- Each channel can select from 20 possible sources of data sources or destinations

For each DMA channel, a DMA interrupt request is generated when a block transfer is complete. Alternatively, an interrupt can be generated when half of the block has been filled.

FIGURE 8-1: TOP LEVEL SYSTEM ARCHITECTURE USING A DEDICATED TRANSACTION BUS

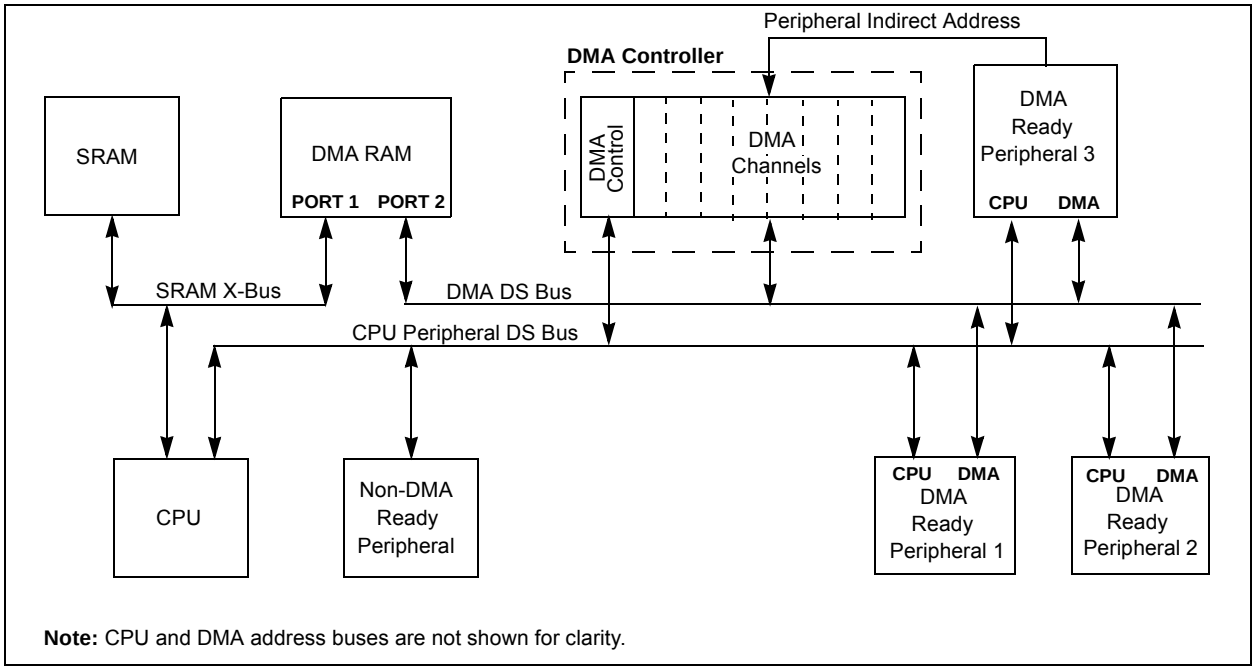

Note: CPU and DMA address buses are not shown for clarity.

8.1 DMAC Registers

Each DMAC Channel x (x = 0, 1, 2, 3, 4, 5, 6 or 7) contains the following registers:

- A 16-bit DMA Channel Control register (DMAxCON)
- A 16-bit DMA Channel IRQ Select register (DMAxREQ)
- A 16-bit DMA RAM Primary Start Address Offset register (DMAxSTA)
- A 16-bit DMA RAM Secondary Start Address Offset register (DMAxSTB)
- A 16-bit DMA Peripheral Address register (DMAxPAD)
- A 10-bit DMA Transfer Count register (DMAxCNT)

An additional pair of status registers, DMACS0 and DMACS1, are common to all DMAC channels.

© 2009-2012 Microchip Technology Inc.

REGISTER 8-1: DMAxCON: DMA CHANNEL x CONTROL REGISTER

R/W-0	R/W-0	R/W-0	R/W-0	R/W-0	U-0	U-0	U-0
CHEN	SIZE	DIR	HALF	NULLW	—	—	—
bit 15							bit 8

U-0	U-0	R/W-0	R/W-0	U-0	U-0	R/W-0	R/W-0
—	—	AMODE<1:0>		—	—	MODE<1:0>	
bit 7							bit 0

Legend:			
R = Readable bit	W = Writable bit	U = Unimplemented bit, read as ‘0’	
-n = Value at POR	‘1’ = Bit is set	‘0’ = Bit is cleared	x = Bit is unknown

bit 15 **CHEN:** Channel Enable bit
1 = Channel enabled
0 = Channel disabled

bit 14 **SIZE:** Data Transfer Size bit
1 = Byte
0 = Word

bit 13 **DIR**: Transfer Direction bit (source/destination bus select)
1 = Read from DMA RAM address, write to peripheral address
0 = Read from peripheral address, write to DMA RAM address

bit 12 **HALF:** Early Block Transfer Complete Interrupt Select bit
1 = Initiate block transfer complete interrupt when half of the data has been moved
0 = Initiate block transfer complete interrupt when all of the data has been moved

bit 11 **NULLW:** Null Data Peripheral Write Mode Select bit
1 = Null data write to peripheral in addition to DMA RAM write (DIR bit must also be clear)
0 = Normal operation

bit 10-6 **Unimplemented:** Read as ‘0’

bit 5-4 **AMODE<1:0>:** DMA Channel Operating Mode Select bits
11 = Reserved
10 = Peripheral Indirect Addressing mode
01 = Register Indirect without Post-Increment mode
00 = Register Indirect with Post-Increment mode

bit 3-2 **Unimplemented:** Read as ‘0’

bit 1-0 **MODE<1:0>:** DMA Channel Operating Mode Select bits
11 = One-Shot, Ping-Pong modes enabled (one block transfer from/to each DMA RAM buffer)
10 = Continuous, Ping-Pong modes enabled
01 = One-Shot, Ping-Pong modes disabled
00 = Continuous, Ping-Pong modes disabled

REGISTER 8-2: DMAxREQ: DMA CHANNEL x IRQ SELECT REGISTER

R/W-0	U-0	U-0	U-0	U-0	U-0	U-0	U-0
FORCE(1)	—	—	—	—	—	—	—
bit 15							bit 8

U-0	R/W-0	R/W-0	R/W-0	R/W-0	R/W-0	R/W-0	R/W-0
—	IRQSEL6(2)	IRQSEL5(2)	IRQSEL4(2)	IRQSEL3(2)	IRQSEL2(2)	IRQSEL1(2)	IRQSEL0(2)
bit 7							bit 0

Legend:			
R = Readable bit	W = Writable bit	U = Unimplemented bit, read as ‘0’	
-n = Value at POR	‘1’ = Bit is set	‘0’ = Bit is cleared	x = Bit is unknown

bit 15 **FORCE:** Force DMA Transfer bit(1)
`1` = Force a single DMA transfer (Manual mode)
`0` = Automatic DMA transfer initiation by DMA request

bit 14-7 **Unimplemented:** Read as ‘`0`’

bit 6-0 **IRQSEL<6:0>:** DMA Peripheral IRQ Number Select bits(2)
`1111111` = DMAIRQ127 selected to be Channel DMAREQ
•
•
•
0000000 = DMAIRQ0 selected to be Channel DMAREQ

Note 1: The FORCE bit cannot be cleared by the user. The FORCE bit is cleared by hardware when the forced DMA transfer is complete.

2: Please see Table 8-1 for a complete listing of IRQ numbers for all interrupt sources.

© 2009-2012 Microchip Technology Inc.

REGISTER 8-3: DMAxSTA: DMA CHANNEL x RAM START ADDRESS OFFSET REGISTER A

R/W-0	R/W-0	R/W-0	R/W-0	R/W-0	R/W-0	R/W-0	R/W-0
STA<15:8>							
bit 15							bit 8

R/W-0	R/W-0	R/W-0	R/W-0	R/W-0	R/W-0	R/W-0	R/W-0
STA<7:0>							
bit 7							bit 0

Legend:			
R = Readable bit	W = Writable bit	U = Unimplemented bit, read as ‘0’	
-n = Value at POR	‘1’ = Bit is set	‘0’ = Bit is cleared	x = Bit is unknown

bit 15-0 **STA<15:0>:** Primary DMA RAM Start Address bits (source or destination)

REGISTER 8-4: DMAxSTB: DMA CHANNEL x RAM START ADDRESS OFFSET REGISTER B

R/W-0	R/W-0	R/W-0	R/W-0	R/W-0	R/W-0	R/W-0	R/W-0
STB<15:8>							
bit 15							bit 8

R/W-0	R/W-0	R/W-0	R/W-0	R/W-0	R/W-0	R/W-0	R/W-0
STB<7:0>							
bit 7							bit 0

Legend:			
R = Readable bit	W = Writable bit	U = Unimplemented bit, read as ‘0’	
-n = Value at POR	‘1’ = Bit is set	‘0’ = Bit is cleared	x = Bit is unknown

bit 15-0 **STB<15:0>:** Secondary DMA RAM Start Address bits (source or destination)

REGISTER 8-5: DMAxPAD: DMA CHANNEL x PERIPHERAL ADDRESS REGISTER(1)

R/W-0	R/W-0	R/W-0	R/W-0	R/W-0	R/W-0	R/W-0	R/W-0
PAD<15:8>							
bit 15							bit 8

R/W-0	R/W-0	R/W-0	R/W-0	R/W-0	R/W-0	R/W-0	R/W-0
PAD<7:0>							
bit 7							bit 0

Legend:			
R = Readable bit	W = Writable bit	U = Unimplemented bit, read as ‘0’	
-n = Value at POR	‘1’ = Bit is set	‘0’ = Bit is cleared	x = Bit is unknown

bit 15-0 **PAD<15:0>:** Peripheral Address Register bits

Note 1: If the channel is enabled (i.e., active), writes to this register may result in unpredictable behavior of the DMA channel and should be avoided.

REGISTER 8-6: DMAxCNT: DMA CHANNEL x TRANSFER COUNT REGISTER(1)

U-0	U-0	U-0	U-0	U-0	U-0	R/W-0	R/W-0
—	—	—	—	—	—	CNT<9:8>(2)	
bit 15							bit 8

R/W-0	R/W-0	R/W-0	R/W-0	R/W-0	R/W-0	R/W-0	R/W-0
CNT<7:0>(2)							
bit 7							bit 0

Legend:			
R = Readable bit	W = Writable bit	U = Unimplemented bit, read as ‘0’	
-n = Value at POR	‘1’ = Bit is set	‘0’ = Bit is cleared	x = Bit is unknown

bit 15-10 **Unimplemented:** Read as ‘0’

bit 9-0 **CNT<9:0>:** DMA Transfer Count Register bits(2)

Note 1: If the channel is enabled (i.e., active), writes to this register may result in unpredictable behavior of the DMA channel and should be avoided.

2: Number of DMA transfers = CNT<9:0> + 1.

© 2009-2012 Microchip Technology Inc.

REGISTER 8-7: DMACS0: DMA CONTROLLER STATUS REGISTER 0

R/C-0	R/C-0	R/C-0	R/C-0	R/C-0	R/C-0	R/C-0	R/C-0
PWCOL7	PWCOL6	PWCOL5	PWCOL4	PWCOL3	PWCOL2	PWCOL1	PWCOL0
bit 15							bit 8

R/C-0	R/C-0	R/C-0	R/C-0	R/C-0	R/C-0	R/C-0	R/C-0
XWCOL7	XWCOL6	XWCOL5	XWCOL4	XWCOL3	XWCOL2	XWCOL1	XWCOL0
bit 7							bit 0

Legend:	C = Clear only bit		
R = Readable bit	W = Writable bit	U = Unimplemented bit, read as ‘0’	
-n = Value at POR	‘1’ = Bit is set	‘0’ = Bit is cleared	x = Bit is unknown

bit 15 **PWCOL7:** Channel 7 Peripheral Write Collision Flag bit
1 = Write collision detected
0 = No write collision detected

bit 14 **PWCOL6:** Channel 6 Peripheral Write Collision Flag bit
1 = Write collision detected
0 = No write collision detected

bit 13 **PWCOL5:** Channel 5 Peripheral Write Collision Flag bit
1 = Write collision detected
0 = No write collision detected

bit 12 **PWCOL4:** Channel 4 Peripheral Write Collision Flag bit
1 = Write collision detected
0 = No write collision detected

bit 11 **PWCOL3:** Channel 3 Peripheral Write Collision Flag bit
1 = Write collision detected
0 = No write collision detected

bit 10 **PWCOL2:** Channel 2 Peripheral Write Collision Flag bit
1 = Write collision detected
0 = No write collision detected

bit 9 **PWCOL1:** Channel 1 Peripheral Write Collision Flag bit
1 = Write collision detected
0 = No write collision detected

bit 8 **PWCOL0:** Channel 0 Peripheral Write Collision Flag bit
1 = Write collision detected
0 = No write collision detected

bit 7 **XWCOL7:** Channel 7 DMA RAM Write Collision Flag bit
1 = Write collision detected
0 = No write collision detected

bit 6 **XWCOL6:** Channel 6 DMA RAM Write Collision Flag bit
1 = Write collision detected
0 = No write collision detected

bit 5 **XWCOL5:** Channel 5 DMA RAM Write Collision Flag bit
1 = Write collision detected
0 = No write collision detected

bit 4 **XWCOL4:** Channel 4 DMA RAM Write Collision Flag bit
1 = Write collision detected
0 = No write collision detected

REGISTER 8-7: DMACS0: DMA CONTROLLER STATUS REGISTER 0 (CONTINUED)

bit 3 **XWCOL3:** Channel 3 DMA RAM Write Collision Flag bit
1 = Write collision detected
0 = No write collision detected

bit 2 **XWCOL2:** Channel 2 DMA RAM Write Collision Flag bit
1 = Write collision detected
0 = No write collision detected

bit 1 **XWCOL1:** Channel 1 DMA RAM Write Collision Flag bit
1 = Write collision detected
0 = No write collision detected

bit 0 **XWCOL0:** Channel 0 DMA RAM Write Collision Flag bit
1 = Write collision detected
0 = No write collision detected

© 2009-2012 Microchip Technology Inc.

REGISTER 8-8: DMACS1: DMA CONTROLLER STATUS REGISTER 1

U-0	U-0	U-0	U-0	R-1	R-1	R-1	R-1
—	—	—	—	LSTCH<3:0>			
bit 15							bit 8

R-0	R-0	R-0	R-0	R-0	R-0	R-0	R-0
PPST7	PPST6	PPST5	PPST4	PPST3	PPST2	PPST1	PPST0
bit 7							bit 0

Legend:			
R = Readable bit	W = Writable bit	U = Unimplemented bit, read as ‘0’	
-n = Value at POR	‘1’ = Bit is set	‘0’ = Bit is cleared	x = Bit is unknown

bit 15-12 **Unimplemented:** Read as ‘0’

bit 11-8 **LSTCH<3:0>:** Last DMA Channel Active bits
1111 = No DMA transfer has occurred since system Reset
1110-1000 = Reserved
0111 = Last data transfer was by DMA Channel 7
0110 = Last data transfer was by DMA Channel 6
0101 = Last data transfer was by DMA Channel 5
0100 = Last data transfer was by DMA Channel 4
0011 = Last data transfer was by DMA Channel 3
0010 = Last data transfer was by DMA Channel 2
0001 = Last data transfer was by DMA Channel 1
0000 = Last data transfer was by DMA Channel 0

bit 7 **PPST7:** Channel 7 Ping-Pong Mode Status Flag bit
1 = DMA7STB register selected
0 = DMA7STA register selected

bit 6 **PPST6:** Channel 6 Ping-Pong Mode Status Flag bit
1 = DMA6STB register selected
0 = DMA6STA register selected

bit 5 **PPST5:** Channel 5 Ping-Pong Mode Status Flag bit
1 = DMA5STB register selected
0 = DMA5STA register selected

bit 4 **PPST4:** Channel 4 Ping-Pong Mode Status Flag bit
1 = DMA4STB register selected
0 = DMA4STA register selected

bit 3 **PPST3:** Channel 3 Ping-Pong Mode Status Flag bit
1 = DMA3STB register selected
0 = DMA3STA register selected

bit 2 **PPST2:** Channel 2 Ping-Pong Mode Status Flag bit
1 = DMA2STB register selected
0 = DMA2STA register selected

bit 1 **PPST1:** Channel 1 Ping-Pong Mode Status Flag bit
1 = DMA1STB register selected
0 = DMA1STA register selected

bit 0 **PPST0:** Channel 0 Ping-Pong Mode Status Flag bit
1 = DMA0STB register selected
0 = DMA0STA register selected

REGISTER 8-9: DSADR: MOST RECENT DMA RAM ADDRESS

R-0	R-0	R-0	R-0	R-0	R-0	R-0	R-0
DSADR<15:8>							
bit 15							bit 8

R-0	R-0	R-0	R-0	R-0	R-0	R-0	R-0
DSADR<7:0>							
bit 7							bit 0

Legend:			
R = Readable bit	W = Writable bit	U = Unimplemented bit, read as ‘0’	
-n = Value at POR	‘1’ = Bit is set	‘0’ = Bit is cleared	x = Bit is unknown

bit 15-0 **DSADR<15:0>:** Most Recent DMA RAM Address Accessed by DMA Controller bits

© 2009-2012 Microchip Technology Inc.

9.0 OSCILLATOR CONFIGURATION

Note 1: This data sheet summarizes the features of the dsPIC33FJXXXGPX06A/X08A/X10A family of devices. However, it is not intended to be a comprehensive reference source. To complement the information in this data sheet, refer to **Section 7. "Oscillator"** (DS70186) in the *"dsPIC33F/PIC24H Family Reference Manual"*, which is available from the Microchip web site (www.microchip.com).

2: Some registers and associated bits described in this section may not be available on all devices. Refer to **Section 4.0 "Memory Organization"** in this data sheet for device-specific register and bit information.

The dsPIC33FJXXXGPX06A/X08A/X10A oscillator system provides:

- Various external and internal oscillator options as clock sources
- An on-chip PLL to scale the internal operating frequency to the required system clock frequency
- The internal FRC oscillator can also be used with the PLL, thereby allowing full-speed operation without any external clock generation hardware
- Clock switching between various clock sources
- Programmable clock postscaler for system power savings
- A Fail-Safe Clock Monitor (FSCM) that detects clock failure and takes fail-safe measures
- An Oscillator Control register (OSCCON)
- Nonvolatile Configuration bits for main oscillator selection

A simplified diagram of the oscillator system is shown in Figure 9-1.

FIGURE 9-1: dsPIC33FJXXXGPX06A/X08A/X10A OSCILLATOR SYSTEM DIAGRAM

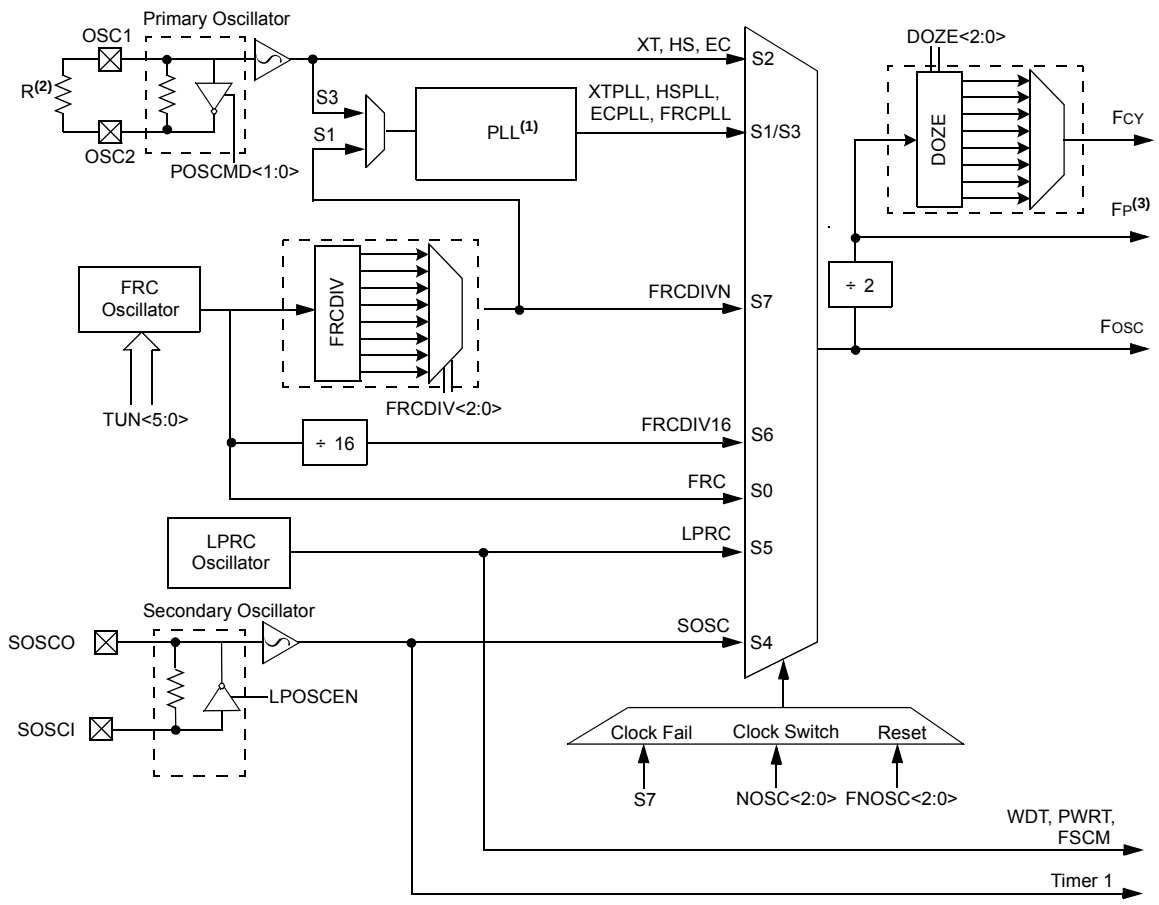

Note 1: See Figure 9-2 for PLL details.

2: If the Oscillator is used with XT or HS modes, an extended parallel resistor with the value of 1 MΩ must be connected.

3: The term, FP refers to the clock source for all the peripherals, while FCY refers to the clock source for the CPU. Throughout this document FP and FCY are used interchangeably, except in the case of Doze mode. FP and FCY will be different when Doze mode is used in any ratio other than 1:1, which is the default.

9.1 CPU Clocking System

There are seven system clock options provided by the dsPIC33FJXXXGPX06A/X08A/X10A:

- FRC Oscillator
- FRC Oscillator with PLL
- Primary (XT, HS or EC) Oscillator
- Primary Oscillator with PLL
- Secondary (LP) Oscillator
- LPRC Oscillator
- FRC Oscillator with postscaler

9.1.1 SYSTEM CLOCK SOURCES

The FRC (Fast RC) internal oscillator runs at a nominal frequency of 7.37 MHz. The user software can tune the FRC frequency. User software can optionally specify a factor (ranging from 1:2 to 1:256) by which the FRC clock frequency is divided. This factor is selected using the FRCDIV<2:0> (CLKDIV<10:8>) bits.

The primary oscillator can use one of the following as its clock source:

- XT (Crystal): Crystals and ceramic resonators in the range of 3 MHz to 10 MHz. The crystal is connected to the OSC1 and OSC2 pins.
- HS (High-Speed Crystal): Crystals in the range of 10 MHz to 40 MHz. The crystal is connected to the OSC1 and OSC2 pins.
- EC (External Clock): External clock signal is directly applied to the OSC1 pin.

The secondary (LP) oscillator is designed for low power and uses a 32.768 kHz crystal or ceramic resonator. The LP oscillator uses the SOSCI and SOSCO pins.

The LPRC (Low-Power RC) internal oscillator runs at a nominal frequency of 32.768 kHz. It is also used as a reference clock by the Watchdog Timer (WDT) and Fail-Safe Clock Monitor (FSCM).

The clock signals generated by the FRC and primary oscillators can be optionally applied to an on-chip Phase-Locked Loop (PLL) to provide a wide range of output frequencies for device operation. PLL configuration is described in **Section 9.1.3 "PLL Configuration"**.

The FRC frequency depends on the FRC accuracy (see Table 25-19) and the value of the FRC Oscillator Tuning register (see Register 9-4).

9.1.2 SYSTEM CLOCK SELECTION

The oscillator source that is used at a device Power-on Reset event is selected using Configuration bit settings. The oscillator Configuration bit settings are located in the Configuration registers in the program memory. (Refer to **Section 22.1 "Configuration Bits"** for further details.) The Initial Oscillator Selection Configuration bits, FNOSC<2:0> (FOSCSEL<2:0>), and the Primary Oscillator Mode Select Configuration bits, POSCMD<1:0> (FOSC<1:0>), select the oscillator source that is used at a Power-on Reset. The FRC primary oscillator is the default (unprogrammed) selection.

The Configuration bits allow users to choose between twelve different clock modes, shown in Table 9-1.

The output of the oscillator (or the output of the PLL if a PLL mode has been selected) FOSC is divided by 2 to generate the device instruction clock (FCY) and the peripheral clock time base (FP). FCY defines the operating speed of the device, and speeds up to 40 MHz are supported by the dsPIC33FJXXXGPX06A/X08A/X10A architecture.

Instruction execution speed or device operating frequency, FCY, is given by:

EQUATION 9-1: DEVICE OPERATING FREQUENCY

$$F_{CY} = \frac{F_{OSC}}{2}$$

9.1.3 PLL CONFIGURATION

The primary oscillator and internal FRC oscillator can optionally use an on-chip PLL to obtain higher speeds of operation. The PLL provides a significant amount of flexibility in selecting the device operating speed. A block diagram of the PLL is shown in Figure 9-2.

The output of the primary oscillator or FRC, denoted as 'FIN', is divided down by a prescale factor (N1) of 2, 3, ... or 33 before being provided to the PLL's Voltage Controlled Oscillator (VCO). The input to the VCO must be selected to be in the range of 0.8 MHz to 8 MHz. Since the minimum prescale factor is 2, this implies that FIN must be chosen to be in the range of 1.6 MHz to 16 MHz. The prescale factor 'N1' is selected using the PLLPRE<4:0> bits (CLKDIV<4:0>).

The PLL Feedback Divisor, selected using the PLLDIV<8:0> bits (PLLFBD<8:0>), provides a factor 'M', by which the input to the VCO is multiplied. This factor must be selected such that the resulting VCO output frequency is in the range of 100 MHz to 200 MHz.

The VCO output is further divided by a postscale factor 'N2'. This factor is selected using the PLLPOST<1:0> bits (CLKDIV<7:6>). 'N2' can be either 2, 4 or 8, and must be selected such that the PLL output frequency (FOSC) is in the range of 12.5 MHz to 80 MHz, which generates device operating speeds of 6.25-40 MIPS.

For a primary oscillator or FRC oscillator, output 'FIN', the PLL output 'FOSC' is given by:

EQUATION 9-2: FOSC CALCULATION

$$F_{OSC} = F_{IN} \cdot \left(\frac{M}{N1 \cdot N2}\right)$$

© 2009-2012 Microchip Technology Inc.

For example, suppose a 10 MHz crystal is being used, with “XT with PLL” being the selected oscillator mode. If PLLPRE<4:0> = 0, then N1 = 2. This yields a VCO input of 10/2 = 5 MHz, which is within the acceptable range of 0.8-8 MHz. If PLLDIV<8:0> = 0x1E, then M = 32. This yields a VCO output of 5 x 32 = 160 MHz, which is within the 100-200 MHz range needed.

If PLLPOST<1:0> = 0, then N2 = 2. This provides a Fosc of 160/2 = 80 MHz. The resultant device operating speed is 80/2 = 40 MIPS.

EQUATION 9-3: XT WITH PLL MODE EXAMPLE

$$F_{CY} = \frac{F_{OSC}}{2} = \frac{1}{2}\left(\frac{10000000 \cdot 32}{2 \cdot 2}\right) = 40 \text{ MIPS}$$

FIGURE 9-2: dsPIC33FJXXXGPX06A/X08A/X10A PLL BLOCK DIAGRAM

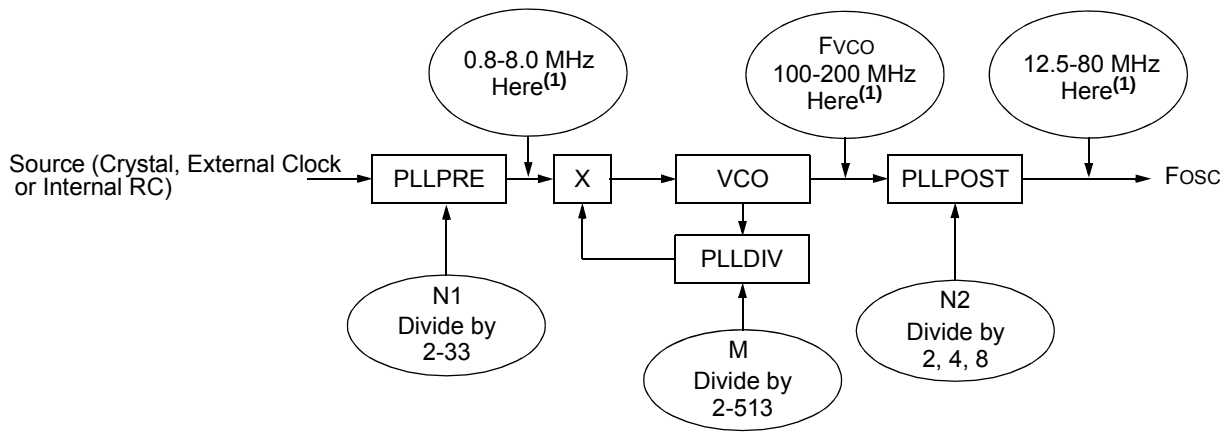

Note 1: This frequency range must be satisfied at all times.

TABLE 9-1: CONFIGURATION BIT VALUES FOR CLOCK SELECTION

Oscillator Mode	Oscillator Source	POSCMD<1:0>	FNOSC<2:0>	See Note
Fast RC Oscillator with Divide-by-N (FRCDIVN)	Internal	xx	111	**1, 2**
Fast RC Oscillator with Divide-by-16 (FRCDIV16)	Internal	xx	110	**1**
Low-Power RC Oscillator (LPRC)	Internal	xx	101	**1**
Secondary (Timer1) Oscillator (Sosc)	Secondary	xx	100	**1**
Primary Oscillator (HS) with PLL (HSPLL)	Primary	10	011	**—**
Primary Oscillator (XT) with PLL (XTPLL)	Primary	01	011	**—**
Primary Oscillator (EC) with PLL (ECPLL)	Primary	00	011	**1**
Primary Oscillator (HS)	Primary	10	010	**—**
Primary Oscillator (XT)	Primary	01	010	**—**
Primary Oscillator (EC)	Primary	00	010	**1**
Fast RC Oscillator with PLL (FRCPLL)	Internal	xx	001	**1**
Fast RC Oscillator (FRC)	Internal	xx	000	**1**

Note 1: OSC2 pin function is determined by the OSCIOFNC Configuration bit.

2: This is the default oscillator mode for an unprogrammed (erased) device.

REGISTER 9-1: OSCCON: OSCILLATOR CONTROL REGISTER(1,3)

U-0	R-0	R-0	R-0	U-0	R/W-y	R/W-y	R/W-y
—	COSC<2:0>			—	NOSC<2:0>(2)		
bit 15							bit 8

R/W-0	U-0	R-0	U-0	R/C-0	U-0	R/W-0	R/W-0
CLKLOCK	—	LOCK	—	CF	—	LPOSCEN	OSWEN
bit 7							bit 0

Legend:	y = Value set from Configuration bits on POR		C = Clear only bit
R = Readable bit	W = Writable bit	U = Unimplemented bit, read as ‘0’	
-n = Value at POR	‘1’ = Bit is set	‘0’ = Bit is cleared	x = Bit is unknown

bit 15 **Unimplemented:** Read as ‘0’

bit 14-12 **COSC<2:0>:** Current Oscillator Selection bits (read-only)
111 = Fast RC oscillator (FRC) with Divide-by-N
110 = Fast RC oscillator (FRC) with Divide-by-16
101 = Low-Power RC oscillator (LPRC)
100 = Secondary oscillator (Sosc)
011 = Primary oscillator (XT, HS, EC) with PLL
010 = Primary oscillator (XT, HS, EC)
001 = Fast RC Oscillator (FRC) with Divide-by-N and PLL (FRCDIVN + PLL)
000 = Fast RC oscillator (FRC)

bit 11 **Unimplemented:** Read as ‘0’

bit 10-8 **NOSC<2:0>:** New Oscillator Selection bits(2)
111 = Fast RC oscillator (FRC) with Divide-by-N
110 = Fast RC oscillator (FRC) with Divide-by-16
101 = Low-Power RC oscillator (LPRC)
100 = Secondary oscillator (Sosc)
011 = Primary oscillator (XT, HS, EC) with PLL
010 = Primary oscillator (XT, HS, EC)
001 = Fast RC Oscillator (FRC) with Divide-by-N and PLL (FRCDIVN + PLL)
000 = Fast RC oscillator (FRC)

bit 7 **CLKLOCK:** Clock Lock Enable bit
1 = If (FCKSM0 = 1), then clock and PLL configurations are locked
If (FCKSM0 = 0), then clock and PLL configurations may be modified
0 = Clock and PLL selections are not locked, configurations may be modified

bit 6 **Unimplemented:** Read as ‘0’

bit 5 **LOCK:** PLL Lock Status bit (read-only)
1 = Indicates that PLL is in lock, or PLL start-up timer is satisfied
0 = Indicates that PLL is out of lock, start-up timer is in progress or PLL is disabled

bit 4 **Unimplemented:** Read as ‘0’

bit 3 **CF:** Clock Fail Detect bit (read/clear by application)
1 = FSCM has detected clock failure
0 = FSCM has not detected clock failure

bit 2 **Unimplemented:** Read as ‘0’

Note 1: Writes to this register require an unlock sequence. Refer to **Section 7. “Oscillator”** (DS70186) in the *“dsPIC33F/PIC24H Family Reference Manual”* for details.

2: Direct clock switches between any primary oscillator mode with PLL and FRCPLL mode are not permitted. This applies to clock switches in either direction. In these instances, the application must switch to FRC mode as a transition clock source between the two PLL modes.

3: This is register is reset only on a Power-on Reset (POR).

© 2009-2012 Microchip Technology Inc.

REGISTER 9-1: OSCCON: OSCILLATOR CONTROL REGISTER(1,3) (CONTINUED)

bit 1 **LPOSCEN:** Secondary (LP) Oscillator Enable bit
`1` = Enable secondary oscillator
`0` = Disable secondary oscillator

bit 0 **OSWEN:** Oscillator Switch Enable bit
`1` = Request oscillator switch to selection specified by NOSC<2:0> bits
`0` = Oscillator switch is complete

Note 1: Writes to this register require an unlock sequence. Refer to **Section 7. "Oscillator"** (DS70186) in the *"dsPIC33F/PIC24H Family Reference Manual"* for details.

2: Direct clock switches between any primary oscillator mode with PLL and FRCPLL mode are not permitted. This applies to clock switches in either direction. In these instances, the application must switch to FRC mode as a transition clock source between the two PLL modes.

3: This is register is reset only on a Power-on Reset (POR).

REGISTER 9-2: CLKDIV: CLOCK DIVISOR REGISTER(2)

R/W-0	R/W-0	R/W-1	R/W-1	R/W-0	R/W-0	R/W-0	R/W-0
ROI	DOZE<2:0>			DOZEN(1)	FRCDIV<2:0>		
bit 15							bit 8

R/W-0	R/W-1	U-0	R/W-0	R/W-0	R/W-0	R/W-0	R/W-0
PLLPOST<1:0>		—	PLLPRE<4:0>				
bit 7							bit 0

Legend:	y = Value set from Configuration bits on POR		
R = Readable bit	W = Writable bit	U = Unimplemented bit, read as ‘0’	
-n = Value at POR	‘1’ = Bit is set	‘0’ = Bit is cleared	x = Bit is unknown

bit 15 **ROI:** Recover on Interrupt bit
1 = Interrupts will clear the DOZEN bit and the processor clock/peripheral clock ratio is set to 1:1
0 = Interrupts have no effect on the DOZEN bit

bit 14-12 **DOZE<2:0>:** Processor Clock Reduction Select bits
111 = FCY/128
110 = FCY/64
101 = FCY/32
100 = FCY/16
011 = FCY/8 (default)
010 = FCY/4
001 = FCY/2
000 = FCY/1

bit 11 **DOZEN:** DOZE Mode Enable bit(1)
1 = DOZE<2:0> field specifies the ratio between the peripheral clocks and the processor clocks
0 = Processor clock/peripheral clock ratio forced to 1:1

bit 10-8 **FRCDIV<2:0>:** Internal Fast RC Oscillator Postscaler bits
111 = FRC divide by 256
110 = FRC divide by 64
101 = FRC divide by 32
100 = FRC divide by 16
011 = FRC divide by 8
010 = FRC divide by 4
001 = FRC divide by 2
000 = FRC divide by 1 (default)

bit 7-6 **PLLPOST<1:0>:** PLL VCO Output Divider Select bits (also denoted as ‘N2’, PLL postscaler)
11 = Output/8
10 = Reserved
01 = Output/4 (default)
00 = Output/2

bit 5 **Unimplemented:** Read as ‘0’

bit 4-0 **PLLPRE<4:0>:** PLL Phase Detector Input Divider bits (also denoted as ‘N1’, PLL prescaler)
11111 = Input/33
•
•
•
00001 = Input/3
00000 = Input/2 (default)

Note 1: This bit is cleared when the ROI bit is set and an interrupt occurs.
2: This is register is reset only on a Power-on Reset (POR).

© 2009-2012 Microchip Technology Inc.

REGISTER 9-3: PLLFBD: PLL FEEDBACK DIVISOR REGISTER(1)

U-0	U-0	U-0	U-0	U-0	U-0	U-0	R/W-0(1)
—	—	—	—	—	—	—	PLLDIV<8>
bit 15							bit 8

R/W-0	R/W-0	R/W-1	R/W-1	R/W-0	R/W-0	R/W-0	R/W-0
PLLDIV<7:0>							
bit 7							bit 0

Legend:			
R = Readable bit	W = Writable bit	U = Unimplemented bit, read as ‘0’	
-n = Value at POR	‘1’ = Bit is set	‘0’ = Bit is cleared	x = Bit is unknown

bit 15-9 **Unimplemented:** Read as ‘0’

bit 8-0 **PLLDIV<8:0>:** PLL Feedback Divisor bits (also denoted as ‘M’, PLL multiplier)

111111111 = 513
•
•
•
000110000 = 50 (default)
•
•
•
000000010 = 4
000000001 = 3
000000000 = 2

Note 1: This is register is reset only on a Power-on Reset (POR).

REGISTER 9-4: OSCTUN: FRC OSCILLATOR TUNING REGISTER(2)

U-0	U-0	U-0	U-0	U-0	U-0	U-0	U-0
—	—	—	—	—	—	—	—
bit 15							bit 8

U-0	U-0	R/W-0	R/W-0	R/W-0	R/W-0	R/W-0	R/W-0
—	—	TUN<5:0>(1)					
bit 7							bit 0

Legend:			
R = Readable bit	W = Writable bit	U = Unimplemented bit, read as ‘0’	
-n = Value at POR	‘1’ = Bit is set	‘0’ = Bit is cleared	x = Bit is unknown

bit 15-6 **Unimplemented:** Read as ‘0’

bit 5-0 **TUN<5:0>:** FRC Oscillator Tuning bits(1)

111111 = Center frequency - 0.375% (7.345 MHz)
•
•
•
100001 = Center frequency - 11.625% (6.52 MHz)
100000 = Center frequency - 12% (6.49 MHz)
011111 = Center frequency + 11.625% (8.23 MHz)
011110 = Center frequency + 11.25% (8.20 MHz)
•
•
•
000001 = Center frequency + 0.375% (7.40 MHz)
000000 = Center frequency (7.37 MHz nominal)

Note 1: OSCTUN functionality has been provided to help customers compensate for temperature effects on the FRC frequency over a wide range of temperatures. The tuning step size is an approximation and is neither characterized nor tested.

2: This is register is reset only on a Power-on Reset (POR).

© 2009-2012 Microchip Technology Inc.

9.2 Clock Switching Operation

Applications are free to switch between any of the four clock sources (Primary, LP, FRC and LPRC) under software control at any time. To limit the possible side effects that could result from this flexibility, dsPIC33FJXXXGPX06A/X08A/X10A devices have a safeguard lock built into the switch process.

Note:	Primary Oscillator mode has three different submodes (XT, HS and EC) which are determined by the POSCMD<1:0> Configuration bits. While an application can switch to and from Primary Oscillator mode in software, it cannot switch between the different primary submodes without reprogramming the device.

9.2.1 ENABLING CLOCK SWITCHING

To enable clock switching, the FCKSM1 Configuration bit in the Configuration register must be programmed to '0'. (Refer to **Section 22.1 "Configuration Bits"** for further details.) If the FCKSM1 Configuration bit is unprogrammed ('1'), the clock switching function and Fail-Safe Clock Monitor function are disabled. This is the default setting.

The NOSC control bits (OSCCON<10:8>) do not control the clock selection when clock switching is disabled. However, the COSC bits (OSCCON<14:12>) reflect the clock source selected by the FNOSC Configuration bits.

The OSWEN control bit (OSCCON<0>) has no effect when clock switching is disabled. It is held at '0' at all times.

9.2.2 OSCILLATOR SWITCHING SEQUENCE

At a minimum, performing a clock switch requires this basic sequence:

1. If desired, read the COSC bits (OSCCON<14:12>) to determine the current oscillator source.
2. Perform the unlock sequence to allow a write to the OSCCON register high byte.
3. Write the appropriate value to the NOSC control bits (OSCCON<10:8>) for the new oscillator source.
4. Perform the unlock sequence to allow a write to the OSCCON register low byte.
5. Set the OSWEN bit to initiate the oscillator switch.

Once the basic sequence is completed, the system clock hardware responds automatically as follows:

1. The clock switching hardware compares the COSC status bits with the new value of the NOSC control bits. If they are the same, then the clock switch is a redundant operation. In this case, the OSWEN bit is cleared automatically and the clock switch is aborted.
2. If a valid clock switch has been initiated, the status bits, LOCK (OSCCON<5>) and CF (OSCCON<3>) are cleared.
3. The new oscillator is turned on by the hardware if it is not currently running. If a crystal oscillator must be turned on, the hardware waits until the Oscillator Start-up Timer (OST) expires. If the new source is using the PLL, the hardware waits until a PLL lock is detected (LOCK = 1).
4. The hardware waits for 10 clock cycles from the new clock source and then performs the clock switch.
5. The hardware clears the OSWEN bit to indicate a successful clock transition. In addition, the NOSC bit values are transferred to the COSC status bits.
6. The old clock source is turned off at this time, with the exception of LPRC (if WDT or FSCM are enabled) or LP (if LPOSCEN remains set).

Note 1:	The processor continues to execute code throughout the clock switching sequence. Timing sensitive code should not be executed during this time.
2:	Direct clock switches between any primary oscillator mode with PLL and FRC-PLL mode are not permitted. This applies to clock switches in either direction. In these instances, the application must switch to FRC mode as a transition clock source between the two PLL modes.
3:	Refer to **Section 7. "Oscillator"** (DS70186) in the *"dsPIC33F/PIC24H Family Reference Manual"* for details.

9.3 Fail-Safe Clock Monitor (FSCM)

The Fail-Safe Clock Monitor (FSCM) allows the device to continue to operate even in the event of an oscillator failure. The FSCM function is enabled by programming. If the FSCM function is enabled, the LPRC internal oscillator runs at all times (except during Sleep mode) and is not subject to control by the Watchdog Timer.

In the event of an oscillator failure, the FSCM generates a clock failure trap event and switches the system clock over to the FRC oscillator. Then the application program can either attempt to restart the oscillator or execute a controlled shutdown. The trap can be treated as a warm Reset by simply loading the Reset address into the oscillator fail trap vector.

If the PLL multiplier is used to scale the system clock, the internal FRC is also multiplied by the same factor on clock failure. Essentially, the device switches to FRC with PLL on a clock failure.

NOTES:

© 2009-2012 Microchip Technology Inc.

10.0 POWER-SAVING FEATURES

Note 1: This data sheet summarizes the features of the dsPIC33FJXXXGPX06A/X08A/X10A family of devices. However, it is not intended to be a comprehensive reference source. To complement the information in this data sheet, refer to **Section 9. "Watchdog Timer and Power-Saving Modes"** (DS70196) in the *"dsPIC33F/PIC24H Family Reference Manual"*, which is available from the Microchip web site (www.microchip.com).

2: Some registers and associated bits described in this section may not be available on all devices. Refer to **Section 4.0 "Memory Organization"** in this data sheet for device-specific register and bit information.

The dsPIC33FJXXXGPX06A/X08A/X10A devices provide the ability to manage power consumption by selectively managing clocking to the CPU and the peripherals. In general, a lower clock frequency and a reduction in the number of circuits being clocked constitutes lower consumed power. dsPIC33FJXXXGPX06A/X08A/X10A devices can manage power consumption in four different ways:

- Clock frequency
- Instruction-based Sleep and Idle modes
- Software-controlled Doze mode
- Selective peripheral control in software

Combinations of these methods can be used to selectively tailor an application's power consumption while still maintaining critical application features, such as timing-sensitive communications.

10.1 Clock Frequency and Clock Switching

dsPIC33FJXXXGPX06A/X08A/X10A devices allow a wide range of clock frequencies to be selected under application control. If the system clock configuration is not locked, users can choose low-power or high-precision oscillators by simply changing the NOSC bits (OSCCON<10:8>). The process of changing a system clock during operation, as well as limitations to the process, are discussed in more detail in **Section 9.0 "Oscillator Configuration"**.

10.2 Instruction-Based Power-Saving Modes

dsPIC33FJXXXGPX06A/X08A/X10A devices have two special power-saving modes that are entered through the execution of a special `PWRSAV` instruction. Sleep mode stops clock operation and halts all code execution. Idle mode halts the CPU and code execution, but allows peripheral modules to continue operation. The assembly syntax of the `PWRSAV` instruction is shown in Example 10-1.

Note: `SLEEP_MODE` and `IDLE_MODE` are constants defined in the assembler include file for the selected device.

Sleep and Idle modes can be exited as a result of an enabled interrupt, WDT time-out or a device Reset. When the device exits these modes, it is said to "wake-up".

10.2.1 SLEEP MODE

Sleep mode has these features:

- The system clock source is shut down. If an on-chip oscillator is used, it is turned off.
- The device current consumption is reduced to a minimum, provided that no I/O pin is sourcing current
- The Fail-Safe Clock Monitor does not operate during Sleep mode since the system clock source is disabled
- The LPRC clock continues to run in Sleep mode if the WDT is enabled
- The WDT, if enabled, is automatically cleared prior to entering Sleep mode
- Some device features or peripherals may continue to operate in Sleep mode. This includes items such as the input change notification on the I/O ports, or peripherals that use an external clock input. Any peripheral that requires the system clock source for its operation is disabled in Sleep mode.

The device will wake-up from Sleep mode on any of these events:

- Any interrupt source that is individually enabled
- Any form of device Reset
- A WDT time-out

On wake-up from Sleep, the processor restarts with the same clock source that was active when Sleep mode was entered.

EXAMPLE 10-1: PWRSAV INSTRUCTION SYNTAX

```
PWRSAV  #SLEEP_MODE    ; Put the device into SLEEP mode
PWRSAV  #IDLE_MODE     ; Put the device into IDLE mode
```

10.2.2 IDLE MODE

Idle mode has these features:

- The CPU stops executing instructions
- The WDT is automatically cleared
- The system clock source remains active. By default, all peripheral modules continue to operate normally from the system clock source, but can also be selectively disabled (see **Section 10.4 "Peripheral Module Disable"**).
- If the WDT or FSCM is enabled, the LPRC also remains active

The device will wake from Idle mode on any of these events:

- Any interrupt that is individually enabled
- Any device Reset
- A WDT time-out

On wake-up from Idle, the clock is reapplied to the CPU and instruction execution will begin (2-4 clock cycles later), starting with the instruction following the PWRSAV instruction, or the first instruction in the ISR.

10.2.3 INTERRUPTS COINCIDENT WITH POWER SAVE INSTRUCTIONS

Any interrupt that coincides with the execution of a PWRSAV instruction is held off until entry into Sleep or Idle mode has completed. The device then wakes up from Sleep or Idle mode.

10.3 Doze Mode

Generally, changing clock speed and invoking one of the power-saving modes are the preferred strategies for reducing power consumption. There may be circumstances, however, where this is not practical. For example, it may be necessary for an application to maintain uninterrupted synchronous communication, even while it is doing nothing else. Reducing system clock speed may introduce communication errors, while using a power-saving mode may stop communications completely.

Doze mode is a simple and effective alternative method to reduce power consumption while the device is still executing code. In this mode, the system clock continues to operate from the same source and at the same speed. Peripheral modules continue to be clocked at the same speed, while the CPU clock speed is reduced. Synchronization between the two clock domains is maintained, allowing the peripherals to access the SFRs while the CPU executes code at a slower rate.

Doze mode is enabled by setting the DOZEN bit (CLKDIV<11>). The ratio between peripheral and core clock speed is determined by the DOZE<2:0> bits (CLKDIV<14:12>). There are eight possible configurations, from 1:1 to 1:128, with 1:1 being the default setting.

It is also possible to use Doze mode to selectively reduce power consumption in event-driven applications. This allows clock-sensitive functions, such as synchronous communications, to continue without interruption while the CPU idles, waiting for something to invoke an interrupt routine. Enabling the automatic return to full-speed CPU operation on interrupts is enabled by setting the ROI bit (CLKDIV<15>). By default, interrupt events have no effect on Doze mode operation.

For example, suppose the device is operating at 20 MIPS and the CAN module has been configured for 500 kbps based on this device operating speed. If the device is now placed in Doze mode with a clock frequency ratio of 1:4, the CAN module continues to communicate at the required bit rate of 500 kbps, but the CPU now starts executing instructions at a frequency of 5 MIPS.

10.4 Peripheral Module Disable

The Peripheral Module Disable (PMD) registers provide a method to disable a peripheral module by stopping all clock sources supplied to that module. When a peripheral is disabled via the appropriate PMD control bit, the peripheral is in a minimum power consumption state. The control and status registers associated with the peripheral are also disabled, so writes to those registers will have no effect and read values will be invalid.

A peripheral module is only enabled if both the associated bit in the PMD register is cleared and the peripheral is supported by the specific dsPIC® DSC variant. If the peripheral is present in the device, it is enabled in the PMD register by default.

Note:	If a PMD bit is set, the corresponding module is disabled after a delay of 1 instruction cycle. Similarly, if a PMD bit is cleared, the corresponding module is enabled after a delay of 1 instruction cycle (assuming the module control registers are already configured to enable module operation).

© 2009-2012 Microchip Technology Inc.

REGISTER 10-1: PMD1: PERIPHERAL MODULE DISABLE CONTROL REGISTER 1

R/W-0	R/W-0	R/W-0	R/W-0	R/W-0	U-0	U-0	R/W-0
T5MD	T4MD	T3MD	T2MD	T1MD	—	—	DCIMD
bit 15							bit 8

R/W-0	R/W-0	R/W-0	R/W-0	R/W-0	R/W-0	R/W-0	R/W-0
I2C1MD	U2MD	U1MD	SPI2MD	SPI1MD	C2MD	C1MD	AD1MD(1)
bit 7							bit 0

Legend:			
R = Readable bit	W = Writable bit	U = Unimplemented bit, read as ‘0’	
-n = Value at POR	‘1’ = Bit is set	‘0’ = Bit is cleared	x = Bit is unknown

bit 15 **T5MD:** Timer5 Module Disable bit
1 = Timer5 module is disabled
0 = Timer5 module is enabled

bit 14 **T4MD:** Timer4 Module Disable bit
1 = Timer4 module is disabled
0 = Timer4 module is enabled

bit 13 **T3MD:** Timer3 Module Disable bit
1 = Timer3 module is disabled
0 = Timer3 module is enabled

bit 12 **T2MD:** Timer2 Module Disable bit
1 = Timer2 module is disabled
0 = Timer2 module is enabled

bit 11 **T1MD:** Timer1 Module Disable bit
1 = Timer1 module is disabled
0 = Timer1 module is enabled

bit 10-9 **Unimplemented:** Read as ‘0’

bit 8 **DCIMD:** DCI Module Disable bit
1 = DCI module is disabled
0 = DCI module is enabled

bit 7 **I2C1MD:** I^2C1 Module Disable bit
1 = I^2C1 module is disabled
0 = I^2C1 module is enabled

bit 6 **U2MD:** UART2 Module Disable bit
1 = UART2 module is disabled
0 = UART2 module is enabled

bit 5 **U1MD:** UART1 Module Disable bit
1 = UART1 module is disabled
0 = UART1 module is enabled

bit 4 **SPI2MD:** SPI2 Module Disable bit
1 = SPI2 module is disabled
0 = SPI2 module is enabled

bit 3 **SPI1MD:** SPI1 Module Disable bit
1 = SPI1 module is disabled
0 = SPI1 module is enabled

Note 1: PCFGx bits have no effect if ADC module is disabled by setting this bit. In this case all port pins multiplexed with ANx will be in Digital mode.

REGISTER 10-1: PMD1: PERIPHERAL MODULE DISABLE CONTROL REGISTER 1 (CONTINUED)

bit 2 **C2MD:** ECAN2 Module Disable bit
1 = ECAN2 module is disabled
0 = ECAN2 module is enabled

bit 1 **C1MD:** ECAN2 Module Disable bit
1 = ECAN1 module is disabled
0 = ECAN1 module is enabled

bit 0 **AD1MD:** ADC1 Module Disable bit(1)
1 = ADC1 module is disabled
0 = ADC1 module is enabled

Note 1: PCFGx bits have no effect if ADC module is disabled by setting this bit. In this case all port pins multiplexed with ANx will be in Digital mode.

© 2009-2012 Microchip Technology Inc.

REGISTER 10-2: PMD2: PERIPHERAL MODULE DISABLE CONTROL REGISTER 2

R/W-0	R/W-0	R/W-0	R/W-0	R/W-0	R/W-0	R/W-0	R/W-0
IC8MD	IC7MD	IC6MD	IC5MD	IC4MD	IC3MD	IC2MD	IC1MD
bit 15							bit 8

R/W-0	R/W-0	R/W-0	R/W-0	R/W-0	R/W-0	R/W-0	R/W-0
OC8MD	OC7MD	OC6MD	OC5MD	OC4MD	OC3MD	OC2MD	OC1MD
bit 7							bit 0

Legend:			
R = Readable bit	W = Writable bit	U = Unimplemented bit, read as ‘0’	
-n = Value at POR	‘1’ = Bit is set	‘0’ = Bit is cleared	x = Bit is unknown

bit 15 **IC8MD:** Input Capture 8 Module Disable bit
1 = Input Capture 8 module is disabled
0 = Input Capture 8 module is enabled

bit 14 **IC7MD:** Input Capture 7 Module Disable bit
1 = Input Capture 7 module is disabled
0 = Input Capture 7 module is enabled

bit 13 **IC6MD:** Input Capture 6 Module Disable bit
1 = Input Capture 6 module is disabled
0 = Input Capture 6 module is enabled

bit 12 **IC5MD:** Input Capture 5 Module Disable bit
1 = Input Capture 5 module is disabled
0 = Input Capture 5 module is enabled

bit 11 **IC4MD:** Input Capture 4 Module Disable bit
1 = Input Capture 4 module is disabled
0 = Input Capture 4 module is enabled

bit 10 **IC3MD:** Input Capture 3 Module Disable bit
1 = Input Capture 3 module is disabled
0 = Input Capture 3 module is enabled

bit 9 **IC2MD:** Input Capture 2 Module Disable bit
1 = Input Capture 2 module is disabled
0 = Input Capture 2 module is enabled

bit 8 **IC1MD:** Input Capture 1 Module Disable bit
1 = Input Capture 1 module is disabled
0 = Input Capture 1 module is enabled

bit 7 **OC8MD:** Output Compare 8 Module Disable bit
1 = Output Compare 8 module is disabled
0 = Output Compare 8 module is enabled

bit 6 **OC7MD:** Output Compare 4 Module Disable bit
1 = Output Compare 7 module is disabled
0 = Output Compare 7 module is enabled

bit 5 **OC6MD:** Output Compare 6 Module Disable bit
1 = Output Compare 6 module is disabled
0 = Output Compare 6 module is enabled

bit 4 **OC5MD:** Output Compare 5 Module Disable bit
1 = Output Compare 5 module is disabled
0 = Output Compare 5 module is enabled

REGISTER 10-2: PMD2: PERIPHERAL MODULE DISABLE CONTROL REGISTER 2 (CONTINUED)

bit 3 **OC4MD:** Output Compare 4 Module Disable bit
1 = Output Compare 4 module is disabled
0 = Output Compare 4 module is enabled

bit 2 **OC3MD:** Output Compare 3 Module Disable bit
1 = Output Compare 3 module is disabled
0 = Output Compare 3 module is enabled

bit 1 **OC2MD:** Output Compare 2 Module Disable bit
1 = Output Compare 2 module is disabled
0 = Output Compare 2 module is enabled

bit 0 **OC1MD:** Output Compare 1 Module Disable bit
1 = Output Compare 1 module is disabled
0 = Output Compare 1 module is enabled

© 2009-2012 Microchip Technology Inc.

REGISTER 10-3: PMD3: PERIPHERAL MODULE DISABLE CONTROL REGISTER 3

R/W-0	R/W-0	R/W-0	R/W-0	U-0	U-0	U-0	U-0
T9MD	T8MD	T7MD	T6MD	—	—	—	—
bit 15							bit 8

U-0	U-0	U-0	U-0	U-0	U-0	R/W-0	R/W-0
—	—	—	—	—	—	I2C2MD	AD2MD(1)
bit 7							bit 0

Legend:			
R = Readable bit	W = Writable bit	U = Unimplemented bit, read as ‘0’	
-n = Value at POR	‘1’ = Bit is set	‘0’ = Bit is cleared	x = Bit is unknown

bit 15 **T9MD:** Timer9 Module Disable bit
1 = Timer9 module is disabled
0 = Timer9 module is enabled

bit 14 **T8MD:** Timer8 Module Disable bit
1 = Timer8 module is disabled
0 = Timer8 module is enabled

bit 13 **T7MD:** Timer7 Module Disable bit
1 = Timer7 module is disabled
0 = Timer7 module is enabled

bit 12 **T6MD:** Timer6 Module Disable bit
1 = Timer6 module is disabled
0 = Timer6 module is enabled

bit 11-2 **Unimplemented:** Read as ‘0’

bit 1 **I2C2MD:** I2C2 Module Disable bit
1 = I2C2 module is disabled
0 = I2C2 module is enabled

bit 0 **AD2MD:** AD2 Module Disable bit(1)
1 = AD2 module is disabled
0 = AD2 module is enabled

Note 1: PCFGx bits have no effect if ADC module is disabled by setting this bit. In this case all port pins multiplexed with ANx will be in Digital mode.

NOTES:

© 2009-2012 Microchip Technology Inc.

11.0 I/O PORTS

Note 1: This data sheet summarizes the features of the dsPIC33FJXXXGPX06A/X08A/X10A family of devices. However, it is not intended to be a comprehensive reference source. To complement the information in this data sheet, refer to **Section 10. "I/O Ports"** (DS70193) in the *"dsPIC33F/PIC24H Family Reference Manual"*, which is available from the Microchip web site (www.microchip.com).

2: Some registers and associated bits described in this section may not be available on all devices. Refer to **Section 4.0 "Memory Organization"** in this data sheet for device-specific register and bit information.

All of the device pins (except VDD, VSS, $\overline{\text{MCLR}}$ and OSC1/CLKIN) are shared between the peripherals and the parallel I/O ports. All I/O input ports feature Schmitt Trigger inputs for improved noise immunity.

11.1 Parallel I/O (PIO) Ports

A parallel I/O port that shares a pin with a peripheral is, in general, subservient to the peripheral. The peripheral's output buffer data and control signals are provided to a pair of multiplexers. The multiplexers select whether the peripheral or the associated port has ownership of the output data and control signals of the I/O pin. The logic also prevents "loop through", in which a port's digital output can drive the input of a peripheral that shares the same pin. Figure 11-1 illustrates how ports are shared with other peripherals and the associated I/O pin to which they are connected.

When a peripheral is enabled and actively driving an associated pin, the use of the pin as a general purpose output pin is disabled. The I/O pin may be read, but the output driver for the parallel port bit will be disabled. If a peripheral is enabled, but the peripheral is not actively driving a pin, that pin may be driven by a port.

All port pins have three registers directly associated with their operation as digital I/O. The data direction register (TRISx) determines whether the pin is an input or an output. If the data direction bit is a '1', then the pin is an input. All port pins are defined as inputs after a Reset. Reads from the latch (LATx), read the latch. Writes to the latch, write the latch. Reads from the port (PORTx), read the port pins, while writes to the port pins, write the latch.

Any bit and its associated data and control registers that are not valid for a particular device will be disabled. That means the corresponding LATx and TRISx registers and the port pins will read as zeros.

When a pin is shared with another peripheral or function that is defined as an input only, it is nevertheless regarded as a dedicated port because there is no other competing source of outputs. An example is the INT4 pin.

FIGURE 11-1: BLOCK DIAGRAM OF A TYPICAL SHARED PORT STRUCTURE

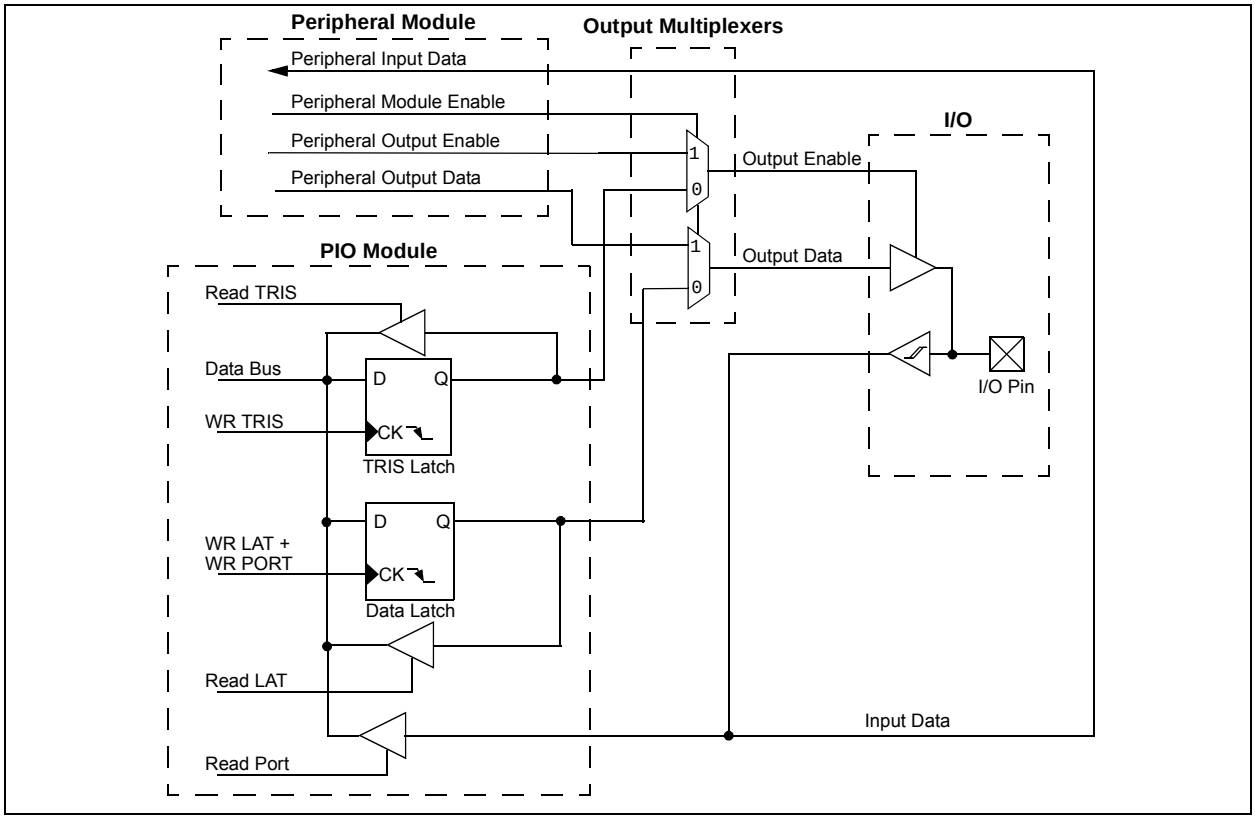

11.2 Open-Drain Configuration

In addition to the PORT, LAT and TRIS registers for data control, some port pins can also be individually configured for either digital or open-drain output. This is controlled by the Open-Drain Control register, ODCx, associated with each port. Setting any of the bits configures the corresponding pin to act as an open-drain output.

The open-drain feature allows the generation of outputs higher than VDD (e.g., 5V) on any desired 5V tolerant pins by using external pull-up resistors. The maximum open-drain voltage allowed is the same as the maximum VIH specification.

See the **"Pin Diagrams"** section for the available pins and their functionality.

11.3 Configuring Analog Port Pins

The use of the ADxPCFGH, ADxPCFGL and TRIS registers control the operation of the ADC port pins. The port pins that are desired as analog inputs must have their corresponding TRIS bit set (input). If the TRIS bit is cleared (output), the digital output level (VOH or VOL) is converted.

Clearing any bit in the ADxPCFGH or ADxPCFGL register configures the corresponding bit to be an analog pin. This is also the Reset state of any I/O pin that has an analog (ANx) function associated with it.

Note:	In devices with two ADC modules, if the corresponding PCFG bit in either AD1PCFGH(L) and AD2PCFGH(L) is cleared, the pin is configured as an analog input.

When reading the PORT register, all pins configured as analog input channels will read as cleared (a low level).

Pins configured as digital inputs will not convert an analog input. Analog levels on any pin that is defined as a digital input (including the ANx pins) can cause the input buffer to consume current that exceeds the device specifications.

Note:	The voltage on an analog input pin can be between -0.3V to (VDD + 0.3 V).

11.4 I/O Port Write/Read Timing

One instruction cycle is required between a port direction change or port write operation and a read operation of the same port. Typically, this instruction would be a NOP.

11.5 Input Change Notification

The input change notification function of the I/O ports allows the dsPIC33FJXXXGPX06A/X08A/X10A devices to generate interrupt requests to the processor in response to a change-of-state on selected input pins. This feature is capable of detecting input change-of-states even in Sleep mode, when the clocks are disabled. Depending on the device pin count, there are up to 24 external signals (CN0 through CN23) that can be selected (enabled) for generating an interrupt request on a change-of-state.

There are four control registers associated with the CN module. The CNEN1 and CNEN2 registers contain the CN interrupt enable (CNxIE) control bits for each of the CN input pins. Setting any of these bits enables a CN interrupt for the corresponding pins.

Each CN pin also has a weak pull-up connected to it. The pull-ups act as a current source that is connected to the pin and eliminate the need for external resistors when push button or keypad devices are connected. The pull-ups are enabled separately using the CNPU1 and CNPU2 registers, which contain the weak pull-up enable (CNxPUE) bits for each of the CN pins. Setting any of the control bits enables the weak pull-ups for the corresponding pins.

Note:	Pull-ups on change notification pins should always be disabled whenever the port pin is configured as a digital output.

EXAMPLE 11-1: PORT WRITE/READ EXAMPLE

```
MOV   0xFF00, W0          ; Configure PORTB<15:8> as inputs
MOV   W0, TRISBB          ; and PORTB<7:0> as outputs
NOP                       ; Delay 1 cycle
btss  PORTB, #13          ; Next Instruction
```


© 2009-2012 Microchip Technology Inc.

11.6 I/O Helpful Tips

1. In some cases, certain pins as defined in **TABLE 25-9: "DC Characteristics: I/O Pin Input Specifications"** under "Injection Current", have internal protection diodes to VDD and VSS. The term "Injection Current" is also referred to as "Clamp Current". On designated pins, with sufficient external current limiting precautions by the user, I/O pin input voltages are allowed to be greater or less than the data sheet absolute maximum ratings with nominal VDD with respect to the VSS and VDD supplies. Note that when the user application forward biases either of the high or low side internal input clamp diodes, that the resulting current being injected into the device that is clamped internally by the VDD and VSS power rails, may affect the ADC accuracy by four to six counts.
2. I/O pins that are shared with any analog input pin, (i.e., ANx), are always analog pins by default after any reset. Consequently, any pin(s) configured as an analog input pin, automatically disables the digital input pin buffer. As such, any attempt to read a digital input pin will always return a '0' regardless of the digital logic level on the pin if the analog pin is configured. To use a pin as a digital I/O pin on a shared ANx pin, the user application needs to configure the analog pin configuration registers in the ADC module, (i.e., ADxPCFGL, AD1PCFGH), by setting the appropriate bit that corresponds to that I/O port pin to a '1'. On devices with more than one ADC, both analog pin configurations for both ADC modules must be configured as a digital I/O pin for that pin to function as a digital I/O pin.

Note:	Although it is not possible to use a digital input pin when its analog function is enabled, it is possible to use the digital I/O output function, TRISx = 0x0, while the analog function is also enabled. However, this is not recommended, particularly if the analog input is connected to an external analog voltage source, which would create signal contention between the analog signal and the output pin driver.

3. Most I/O pins have multiple functions. Referring to the device pin diagrams in the data sheet, the priorities of the functions allocated to any pins are indicated by reading the pin name from left-to-right. The left most function name takes precedence over any function to its right in the naming convention. For example: AN16/T2CK/T7CK/RC1. This indicates that AN16 is the highest priority in this example and will supersede all other functions to its right in the list. Those other functions to its right, even if enabled, would not work as long as any other function to its left was enabled. This rule applies to all of the functions listed for a given pin.
4. Each CN pin has a configurable internal weak pull-up resistor. The pull-ups act as a current source connected to the pin, and eliminates the need for external resistors in certain applications. The internal pull-up is to ~(VDD-0.8) not VDD. This is still above the minimum VIH of CMOS and TTL devices.
5. When driving LEDs directly, the I/O pin can source or sink more current than what is specified in the VOH/IOH and VOL/IOL DC characteristic specification. The respective IOH and IOL current rating only applies to maintaining the corresponding output at or above the VOH and at or below the VOL levels. However, for LEDs unlike digital inputs of an externally connected device, they are not governed by the same minimum VIH/VIL levels. An I/O pin output can safely sink or source any current less than that listed in the absolute maximum rating section of the data sheet. For example:

   VOH = 2.4v @ IOH = -8 mA and VDD = 3.3V

   The maximum output current sourced by any 8 mA I/O pin = 12 mA.

   LED source current < 12 mA is technically permitted. Refer to the VOH/IOH graphs in **Section 25.0 "Electrical Characteristics"** for additional information.

11.7 I/O Resources

Many useful resources related to I/O are provided on the main product page of the Microchip web site for the devices listed in this data sheet. This product page, which can be accessed using this link, contains the latest updates and additional information.

Note:	In the event you are not able to access the product page using the link above, enter this URL in your browser: http://www.microchip.com/wwwproducts/Devices.aspx?dDocName=en546064

11.7.1 KEY RESOURCES

- **Section 10. "I/O Ports"** (DS70193)
- Code Samples
- Application Notes
- Software Libraries
- Webinars
- All related dsPIC33F/PIC24H Family Reference Manuals Sections
- Development Tools

NOTES:

© 2009-2012 Microchip Technology Inc.

12.0 TIMER1

Note 1: This data sheet summarizes the features of the dsPIC33FJXXXGPX06A/X08A/X10A family of devices. However, it is not intended to be a comprehensive reference source. To complement the information in this data sheet, refer to **Section 11. "Timers"** (DS70205) in the *"dsPIC33F/PIC24H Family Reference Manual"*, which is available from the Microchip web site (www.microchip.com).

2: Some registers and associated bits described in this section may not be available on all devices. Refer to **Section 4.0 "Memory Organization"** in this data sheet for device-specific register and bit information.

The Timer1 module is a 16-bit timer, which can serve as the time counter for the real-time clock, or operate as a free-running interval timer/counter. Timer1 can operate in three modes:

- 16-bit Timer
- 16-bit Synchronous Counter
- 16-bit Asynchronous Counter

Timer1 also supports these features:

- Timer gate operation
- Selectable prescaler settings
- Timer operation during CPU Idle and Sleep modes
- Interrupt on 16-bit Period register match or falling edge of external gate signal

Figure 12-1 presents a block diagram of the 16-bit timer module.

To configure Timer1 for operation:

1. Set the TON bit (= 1) in the T1CON register.
2. Select the timer prescaler ratio using the TCKPS<1:0> bits in the T1CON register.
3. Set the Clock and Gating modes using the TCS and TGATE bits in the T1CON register.
4. Set or clear the TSYNC bit in T1CON to select synchronous or asynchronous operation.
5. Load the timer period value into the PR1 register.
6. If interrupts are required, set the interrupt enable bit, T1IE. Use the priority bits, T1IP<2:0>, to set the interrupt priority.

FIGURE 12-1: 16-BIT TIMER1 MODULE BLOCK DIAGRAM

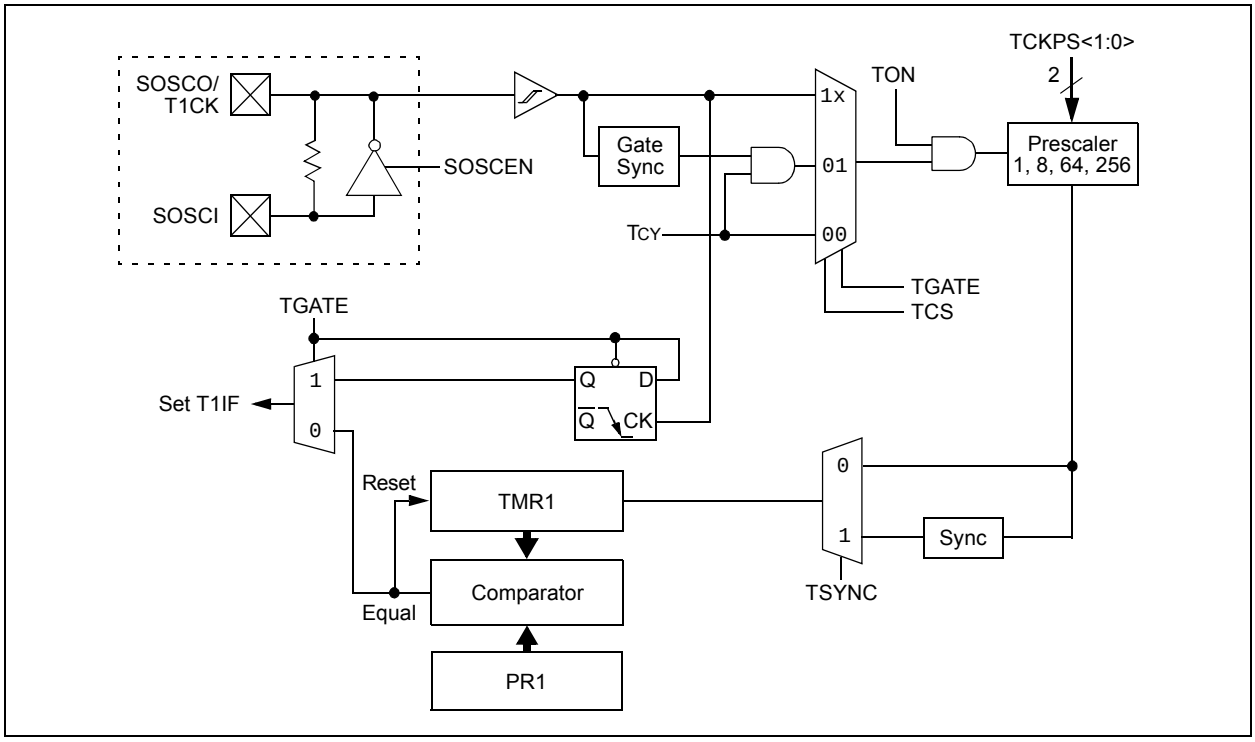

REGISTER 12-1: T1CON: TIMER1 CONTROL REGISTER

R/W-0	U-0	R/W-0	U-0	U-0	U-0	U-0	U-0
TON	—	TSIDL	—	—	—	—	—
bit 15							bit 8

U-0	R/W-0	R/W-0	R/W-0	U-0	R/W-0	R/W-0	U-0
—	TGATE	TCKPS<1:0>		—	TSYNC	TCS	—
bit 7							bit 0

Legend:			
R = Readable bit	W = Writable bit	U = Unimplemented bit, read as ‘0’	
-n = Value at POR	‘1’ = Bit is set	‘0’ = Bit is cleared	x = Bit is unknown

bit 15 **TON:** Timer1 On bit
1 = Starts 16-bit Timer1
0 = Stops 16-bit Timer1

bit 14 **Unimplemented:** Read as ‘0’

bit 13 **TSIDL:** Stop in Idle Mode bit
1 = Discontinue module operation when device enters Idle mode
0 = Continue module operation in Idle mode

bit 12-7 **Unimplemented:** Read as ‘0’

bit 6 **TGATE:** Timer1 Gated Time Accumulation Enable bit
When TCS = 1:
This bit is ignored.
When TCS = 0:
1 = Gated time accumulation enabled
0 = Gated time accumulation disabled

bit 5-4 **TCKPS<1:0>:** Timer1 Input Clock Prescale Select bits
11 = 1:256
10 = 1:64
01 = 1:8
00 = 1:1

bit 3 **Unimplemented:** Read as ‘0’

bit 2 **TSYNC:** Timer1 External Clock Input Synchronization Select bit
When TCS = 1:
1 = Synchronize external clock input
0 = Do not synchronize external clock input
When TCS = 0:
This bit is ignored.

bit 1 **TCS:** Timer1 Clock Source Select bit
1 = External clock from pin T1CK (on the rising edge)
0 = Internal clock (FCY)

bit 0 **Unimplemented:** Read as ‘0’

© 2009-2012 Microchip Technology Inc.

13.0 TIMER2/3, TIMER4/5, TIMER6/7 AND TIMER8/9

Note 1: This data sheet summarizes the features of the dsPIC33FJXXXGPX06A/X08A/X10A family of devices. However, it is not intended to be a comprehensive reference source. To complement the information in this data sheet, refer to **Section 11. "Timers"** (DS70205) in the *"dsPIC33F/PIC24H Family Reference Manual"*, which is available from the Microchip web site (www.microchip.com).

2: Some registers and associated bits described in this section may not be available on all devices. Refer to **Section 4.0 "Memory Organization"** in this data sheet for device-specific register and bit information.

The Timer2/3, Timer4/5, Timer6/7 and Timer8/9 modules are 32-bit timers, which can also be configured as four independent 16-bit timers with selectable operating modes.

As a 32-bit timer, Timer2/3, Timer4/5, Timer6/7 and Timer8/9 operate in three modes:

- Two Independent 16-bit Timers (e.g., Timer2 and Timer3) with all 16-bit operating modes (except Asynchronous Counter mode)
- Single 32-bit Timer
- Single 32-bit Synchronous Counter

They also support these features:

- Timer Gate Operation
- Selectable Prescaler Settings
- Timer Operation during Idle and Sleep modes
- Interrupt on a 32-bit Period Register Match
- Time Base for Input Capture and Output Compare Modules (Timer2 and Timer3 only)
- ADC1 Event Trigger (Timer2/3 only)
- ADC2 Event Trigger (Timer4/5 only)

Individually, all eight of the 16-bit timers can function as synchronous timers or counters. They also offer the features listed above, except for the event trigger; this is implemented only with Timer2/3. The operating modes and enabled features are determined by setting the appropriate bit(s) in the T2CON, T3CON, T4CON, T5CON, T6CON, T7CON, T8CON and T9CON registers. T2CON, T4CON, T6CON and T8CON are shown in generic form in Register 13-1. T3CON, T5CON, T7CON and T9CON are shown in Register 13-2.

For 32-bit timer/counter operation, Timer2, Timer4, Timer6 or Timer8 is the least significant word; Timer3, Timer5, Timer7 or Timer9 is the most significant word of the 32-bit timers.

Note: For 32-bit operation, T3CON, T5CON, T7CON and T9CON control bits are ignored. Only T2CON, T4CON, T6CON and T8CON control bits are used for setup and control. Timer2, Timer4, Timer6 and Timer8 clock and gate inputs are utilized for the 32-bit timer modules, but an interrupt is generated with the Timer3, Timer5, Ttimer7 and Timer9 interrupt flags.

To configure Timer2/3, Timer4/5, Timer6/7 or Timer8/9 for 32-bit operation:

1. Set the corresponding T32 control bit.
2. Select the prescaler ratio for Timer2, Timer4, Timer6 or Timer8 using the TCKPS<1:0> bits.
3. Set the Clock and Gating modes using the corresponding TCS and TGATE bits.
4. Load the timer period value. PR3, PR5, PR7 or PR9 contains the most significant word of the value, while PR2, PR4, PR6 or PR8 contains the least significant word.
5. If interrupts are required, set the interrupt enable bit, T3IE, T5IE, T7IE or T9IE. Use the priority bits, T3IP<2:0>, T5IP<2:0>, T7IP<2:0> or T9IP<2:0>, to set the interrupt priority. While Timer2, Timer4, Timer6 or Timer8 control the timer, the interrupt appears as a Timer3, Timer5, Timer7 or Timer9 interrupt.
6. Set the corresponding TON bit.

The timer value at any point is stored in the register pair, TMR3:TMR2, TMR5:TMR4, TMR7:TMR6 or TMR9:TMR8. TMR3, TMR5, TMR7 or TMR9 always contains the most significant word of the count, while TMR2, TMR4, TMR6 or TMR8 contains the least significant word.

To configure any of the timers for individual 16-bit operation:

1. Clear the T32 bit corresponding to that timer.
2. Select the timer prescaler ratio using the TCKPS<1:0> bits.
3. Set the Clock and Gating modes using the TCS and TGATE bits.
4. Load the timer period value into the PRx register.
5. If interrupts are required, set the interrupt enable bit, TxIE. Use the priority bits, TxIP<2:0>, to set the interrupt priority.
6. Set the TON bit.

A block diagram for a 32-bit timer pair (Timer4/5) example is shown in Figure 13-1 and a timer (Timer4) operating in 16-bit mode example is shown in Figure 13-2.

Note: Only Timer2 and Timer3 can trigger a DMA data transfer.

FIGURE 13-1: TIMER2/3 (32-BIT) BLOCK DIAGRAM(1)

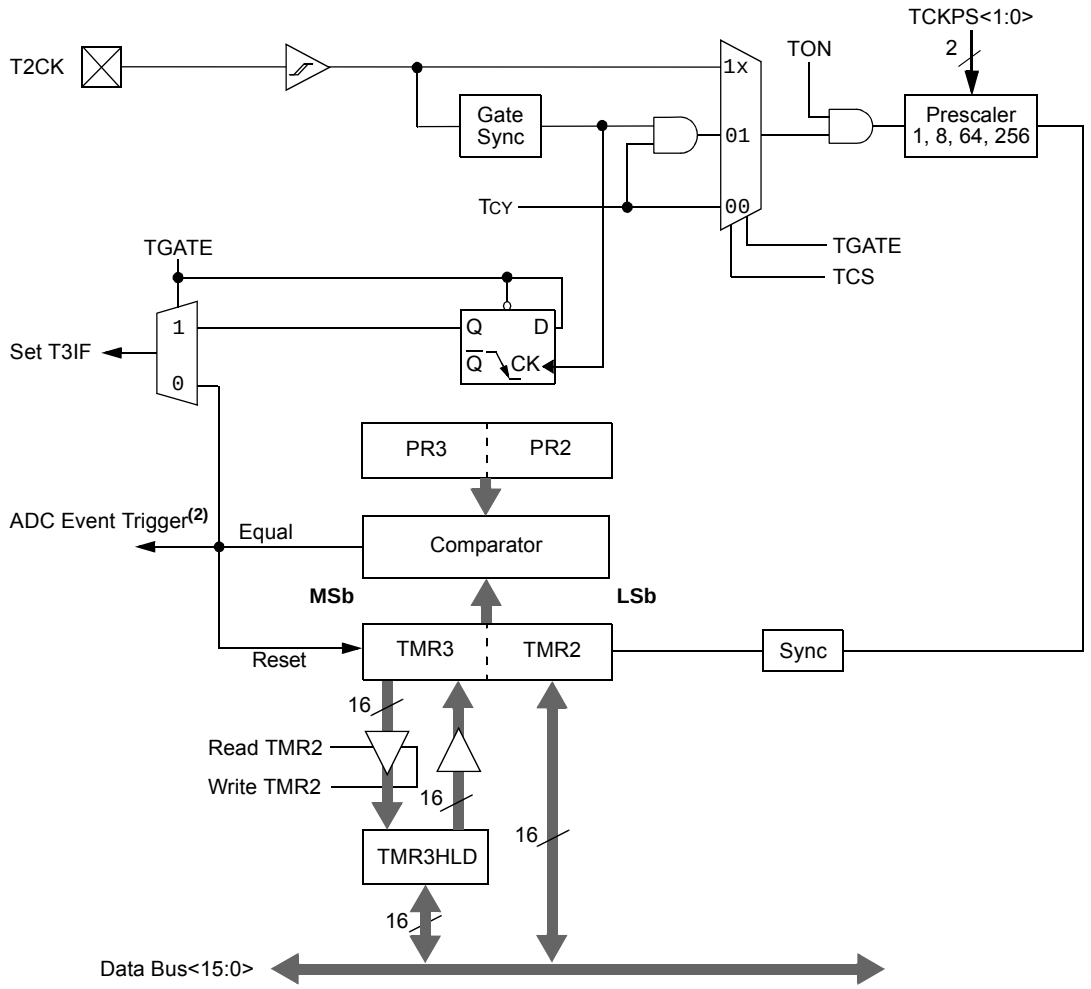

Note 1: The 32-bit timer control bit, T32, must be set for 32-bit timer/counter operation. All control bits are respective to the T2CON register.

2: The ADC event trigger is available only on Timer2/3.

© 2009-2012 Microchip Technology Inc.

FIGURE 13-2: TIMER2 (16-BIT) BLOCK DIAGRAM

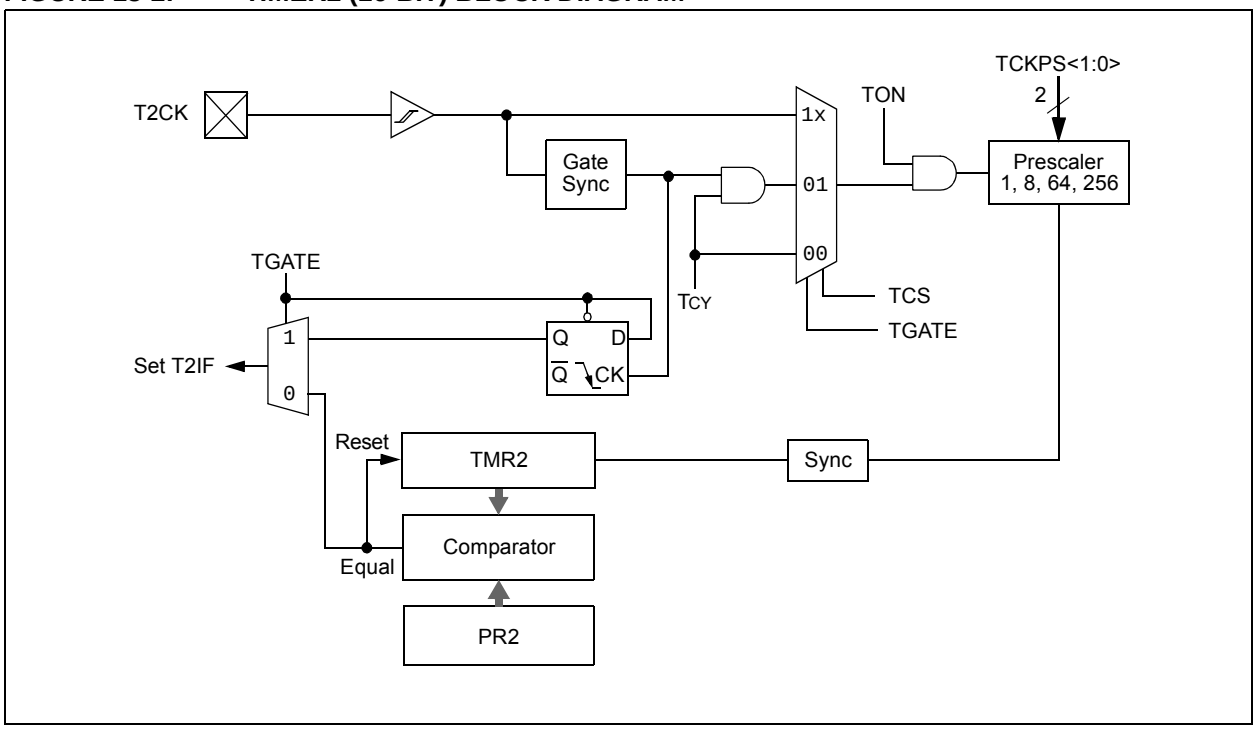

REGISTER 13-1: TxCON (T2CON, T4CON, T6CON OR T8CON) CONTROL REGISTER

R/W-0	U-0	R/W-0	U-0	U-0	U-0	U-0	U-0
TON	—	TSIDL	—	—	—	—	—
bit 15							bit 8

U-0	R/W-0	R/W-0	R/W-0	R/W-0	U-0	R/W-0	U-0
—	TGATE	TCKPS<1:0>		T32	—	TCS(1)	—
bit 7							bit 0

Legend:			
R = Readable bit	W = Writable bit	U = Unimplemented bit, read as ‘0’	
-n = Value at POR	‘1’ = Bit is set	‘0’ = Bit is cleared	x = Bit is unknown

bit 15 **TON:** Timerx On bit
When T32 = 1:
1 = Starts 32-bit Timerx/y
0 = Stops 32-bit Timerx/y
When T32 = 0:
1 = Starts 16-bit Timerx
0 = Stops 16-bit Timerx

bit 14 **Unimplemented:** Read as ‘0’

bit 13 **TSIDL:** Stop in Idle Mode bit
1 = Discontinue module operation when device enters Idle mode
0 = Continue module operation in Idle mode

bit 12-7 **Unimplemented:** Read as ‘0’

bit 6 **TGATE:** Timerx Gated Time Accumulation Enable bit
When TCS = 1:
This bit is ignored.
When TCS = 0:
1 = Gated time accumulation enabled
0 = Gated time accumulation disabled

bit 5-4 **TCKPS<1:0>:** Timerx Input Clock Prescale Select bits
11 = 1:256
10 = 1:64
01 = 1:8
00 = 1:1

bit 3 **T32:** 32-bit Timer Mode Select bit
1 = Timerx and Timery form a single 32-bit timer
0 = Timerx and Timery act as two 16-bit timers

bit 2 **Unimplemented:** Read as ‘0’

bit 1 **TCS:** Timerx Clock Source Select bit(1)
1 = External clock from pin TxCK (on the rising edge)
0 = Internal clock (FCY)

bit 0 **Unimplemented:** Read as ‘0’

Note 1: The TxCK pin is not available on all timers. Refer to the **“Pin Diagrams”** section for the available pins.

© 2009-2012 Microchip Technology Inc.

REGISTER 13-2: TyCON (T3CON, T5CON, T7CON OR T9CON) CONTROL REGISTER

R/W-0	U-0	R/W-0	U-0	U-0	U-0	U-0	U-0
TON(1)	—	TSIDL(2)	—	—	—	—	—
bit 15							bit 8

U-0	R/W-0	R/W-0	R/W-0	U-0	U-0	R/W-0	U-0
—	TGATE(1)	TCKPS<1:0>(1)		—	—	TCS(1,3)	—
bit 7							bit 0

Legend:			
R = Readable bit	W = Writable bit	U = Unimplemented bit, read as ‘0’	
-n = Value at POR	‘1’ = Bit is set	‘0’ = Bit is cleared	x = Bit is unknown

bit 15 **TON:** Timery On bit(1)
1 = Starts 16-bit Timery
0 = Stops 16-bit Timery

bit 14 **Unimplemented:** Read as ‘0’

bit 13 **TSIDL:** Stop in Idle Mode bit(2)
1 = Discontinue module operation when device enters Idle mode
0 = Continue module operation in Idle mode

bit 12-7 **Unimplemented:** Read as ‘0’

bit 6 **TGATE:** Timery Gated Time Accumulation Enable bit(1)
When TCS = 1:
This bit is ignored.
When TCS = 0:
1 = Gated time accumulation enabled
0 = Gated time accumulation disabled

bit 5-4 **TCKPS<1:0>:** Timer3 Input Clock Prescale Select bits(1)
11 = 1:256
10 = 1:64
01 = 1:8
00 = 1:1

bit 3-2 **Unimplemented:** Read as ‘0’

bit 1 **TCS:** Timery Clock Source Select bit(1,3)
1 = External clock from pin TyCK (on the rising edge)
0 = Internal clock (FCY)

bit 0 **Unimplemented:** Read as ‘0’

Note 1: When 32-bit operation is enabled (T2CON<3> = 1), these bits have no effect on Timery operation; all timer functions are set through T2CON.

2: When 32-bit timer operation is enabled (T32 = 1) in the Timer Control register (TxCON<3>), the TSIDL bit must be cleared to operate the 32-bit timer in Idle mode.

3: The TyCK pin is not available on all timers. Refer to the **“Pin Diagrams”** section for the available pins.

NOTES:

© 2009-2012 Microchip Technology Inc.

14.0 INPUT CAPTURE

Note 1: This data sheet summarizes the features of the dsPIC33FJXXXGPX06A/X08A/X10A family of devices. However, it is not intended to be a comprehensive reference source. To complement the information in this data sheet, refer to **Section 12. "Input Capture"** (DS70198) in the *"dsPIC33F/PIC24H Family Reference Manual"*, which is available from the Microchip web site (www.microchip.com).

2: Some registers and associated bits described in this section may not be available on all devices. Refer to **Section 4.0 "Memory Organization"** in this data sheet for device-specific register and bit information.

The input capture module is useful in applications requiring frequency (period) and pulse measurement. The dsPIC33FJXXXGPX06A/X08A/X10A devices support up to eight input capture channels.

The input capture module captures the 16-bit value of the selected Time Base register when an event occurs at the ICx pin. The events that cause a capture event are listed below in three categories:

- Simple Capture Event modes:
  - Capture timer value on every falling edge of input at ICx pin
  - Capture timer value on every rising edge of input at ICx pin
- Capture timer value on every edge (rising and falling)
- Prescaler Capture Event modes:
  - Capture timer value on every 4th rising edge of input at ICx pin
  - Capture timer value on every 16th rising edge of input at ICx pin

Each input capture channel can select between one of two 16-bit timers (Timer2 or Timer3) for the time base. The selected timer can use either an internal or external clock.

Other operational features include:

- Device wake-up from capture pin during CPU Sleep and Idle modes
- Interrupt on input capture event
- 4-word FIFO buffer for capture values
  - Interrupt optionally generated after 1, 2, 3 or 4 buffer locations are filled
- Input capture can also be used to provide additional sources of external interrupts

Note: Only IC1 and IC2 can trigger a DMA data transfer. If DMA data transfers are required, the FIFO buffer size must be set to 1 (ICI<1:0> = 00).

FIGURE 14-1: INPUT CAPTURE BLOCK DIAGRAM

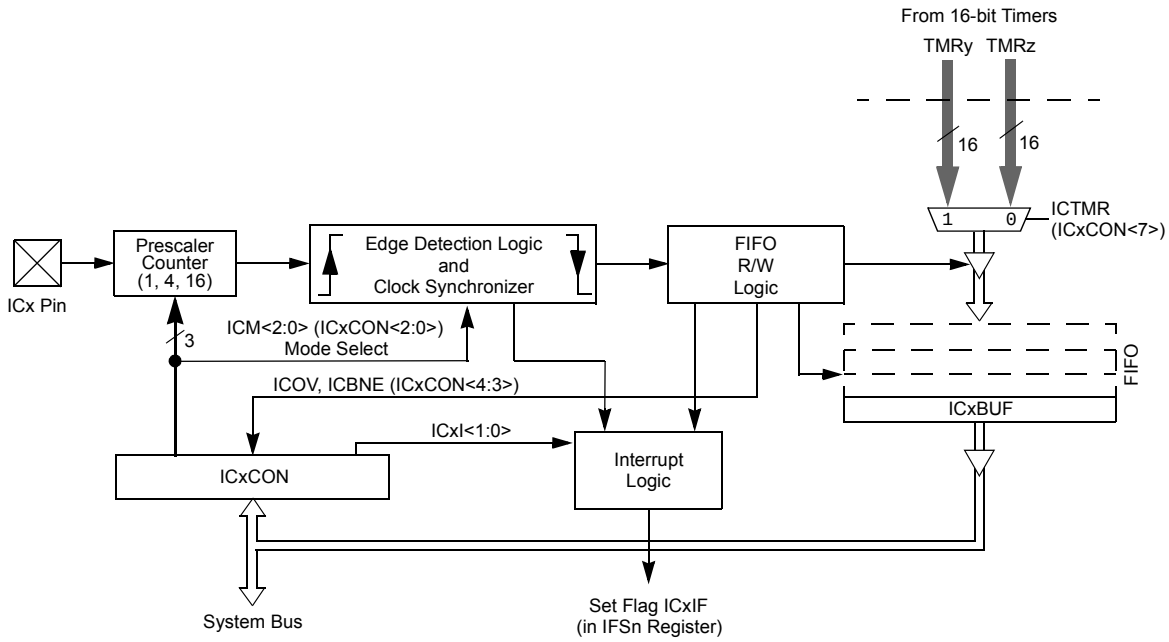

Note: An 'x' in a signal, register or bit name denotes the number of the capture channel.

14.1 Input Capture Registers

REGISTER 14-1: ICxCON: INPUT CAPTURE x CONTROL REGISTER

U-0	U-0	R/W-0	U-0	U-0	U-0	U-0	U-0
—	—	ICSIDL	—	—	—	—	—
bit 15							bit 8

R/W-0	R/W-0	R/W-0	R-0, HC	R-0, HC	R/W-0	R/W-0	R/W-0
ICTMR(1)	ICI<1:0>		ICOV	ICBNE	ICM<2:0>		
bit 7							bit 0

Legend:			
R = Readable bit	W = Writable bit	U = Unimplemented bit, read as ‘0’	
-n = Value at POR	‘1’ = Bit is set	‘0’ = Bit is cleared	x = Bit is unknown

bit 15-14 **Unimplemented:** Read as ‘0’

bit 13 **ICSIDL:** Input Capture Module Stop in Idle Control bit
1 = Input capture module will halt in CPU Idle mode
0 = Input capture module will continue to operate in CPU Idle mode

bit 12-8 **Unimplemented:** Read as ‘0’

bit 7 **ICTMR:** Input Capture Timer Select bits(1)
1 = TMR2 contents are captured on capture event
0 = TMR3 contents are captured on capture event

bit 6-5 **ICI<1:0>:** Select Number of Captures per Interrupt bits
11 = Interrupt on every fourth capture event
10 = Interrupt on every third capture event
01 = Interrupt on every second capture event
00 = Interrupt on every capture event

bit 4 **ICOV:** Input Capture Overflow Status Flag bit (read-only)
1 = Input capture overflow occurred
0 = No input capture overflow occurred

bit 3 **ICBNE:** Input Capture Buffer Empty Status bit (read-only)
1 = Input capture buffer is not empty, at least one more capture value can be read
0 = Input capture buffer is empty

bit 2-0 **ICM<2:0>:** Input Capture Mode Select bits
111 = Input capture functions as interrupt pin only when device is in Sleep or Idle mode
(Rising edge detect only, all other control bits are not applicable.)
110 = Unused (module disabled)
101 = Capture mode, every 16th rising edge
100 = Capture mode, every 4th rising edge
011 = Capture mode, every rising edge
010 = Capture mode, every falling edge
001 = Capture mode, every edge (rising and falling)
(ICI<1:0> bits do not control interrupt generation for this mode.)
000 = Input capture module turned off

© 2009-2012 Microchip Technology Inc.

15.0 OUTPUT COMPARE

Note 1: This data sheet summarizes the features of the dsPIC33FJXXXGPX06A/X08A/X10A families of devices. It is not intended to be a comprehensive reference source. To complement the information in this data sheet, refer to **Section 13. "Output Compare"** (DS70209) of the *"dsPIC33F/PIC24H Family Reference Manual"*, which is available from the Microchip web site (www.microchip.com).

2: Some registers and associated bits described in this section may not be available on all devices. Refer to **Section 4.0 "Memory Organization"** in this data sheet for device-specific register and bit information.

The output compare module can select either Timer2 or Timer3 for its time base. The module compares the value of the timer with the value of one or two Compare registers depending on the operating mode selected. The state of the output pin changes when the timer value matches the Compare register value. The output compare module generates either a single output pulse, or a sequence of output pulses, by changing the state of the output pin on the compare match events. The output compare module can also generate interrupts on compare match events.

The output compare module has multiple operating modes:

- Active-Low One-Shot mode
- Active-High One-Shot mode
- Toggle mode
- Delayed One-Shot mode
- Continuous Pulse mode
- PWM mode without Fault Protection
- PWM mode with Fault Protection

FIGURE 15-1: OUTPUT COMPARE MODULE BLOCK DIAGRAM

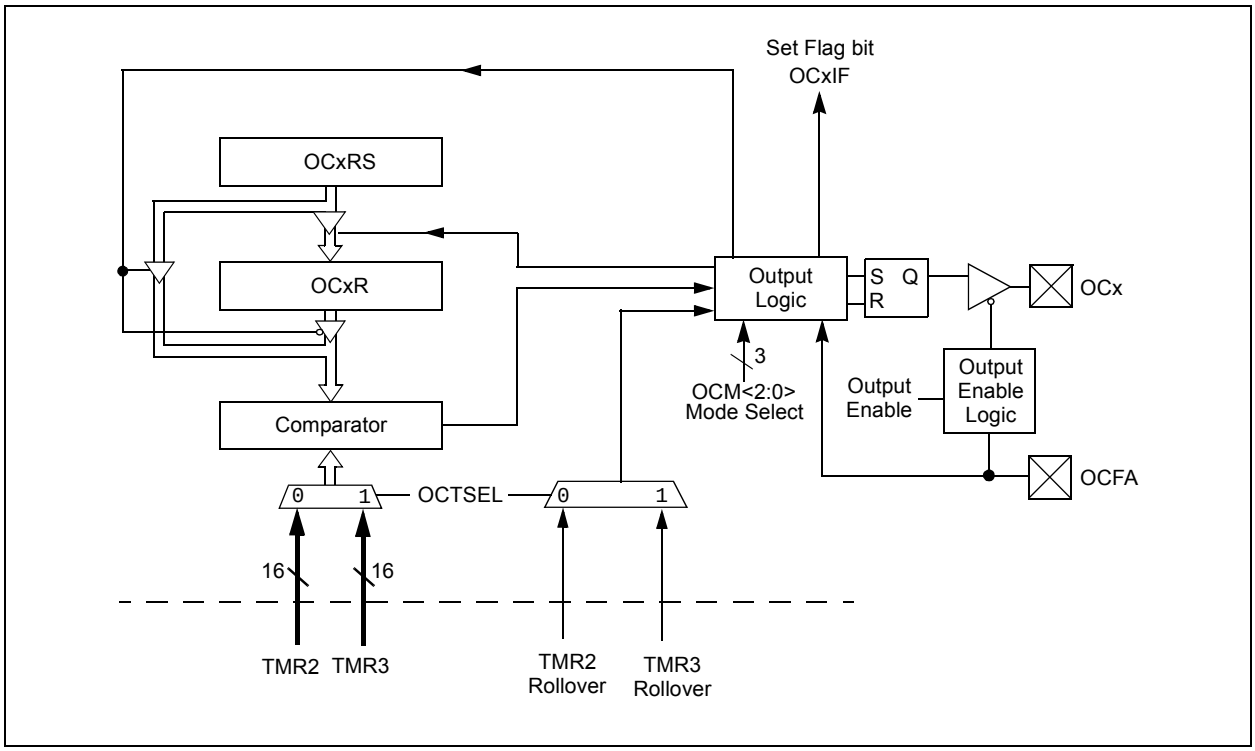

15.1 Output Compare Modes

Configure the Output Compare modes by setting the appropriate Output Compare Mode (OCM<2:0>) bits in the Output Compare Control (OCxCON<2:0>) register. Table 15-1 lists the different bit settings for the Output Compare modes. Figure 15-2 illustrates the output compare operation for various modes. The user application must disable the associated timer when writing to the Output Compare Control registers to avoid malfunctions.

> **Note:** See **Section 13. "Output Compare"** (DS70209) in the *"dsPIC33F/PIC24H Family Reference Manual"* for OCxR and OCxRS register restrictions.

TABLE 15-1: OUTPUT COMPARE MODES

OCM<2:0>	Mode	OCx Pin Initial State	OCx Interrupt Generation
000	Module Disabled	Controlled by GPIO register	—
001	Active-Low One-Shot	0	OCx rising edge
010	Active-High One-Shot	1	OCx falling edge
011	Toggle	Current output is maintained	OCx rising and falling edge
100	Delayed One-Shot	0	OCx falling edge
101	Continuous Pulse	0	OCx falling edge
110	PWM without Fault Protection	'0', if OCxR is zero '1', if OCxR is non-zero	No interrupt
111	PWM with Fault Protection	'0', if OCxR is zero '1', if OCxR is non-zero	OCFA falling edge for OC1 to OC4

FIGURE 15-2: OUTPUT COMPARE OPERATION

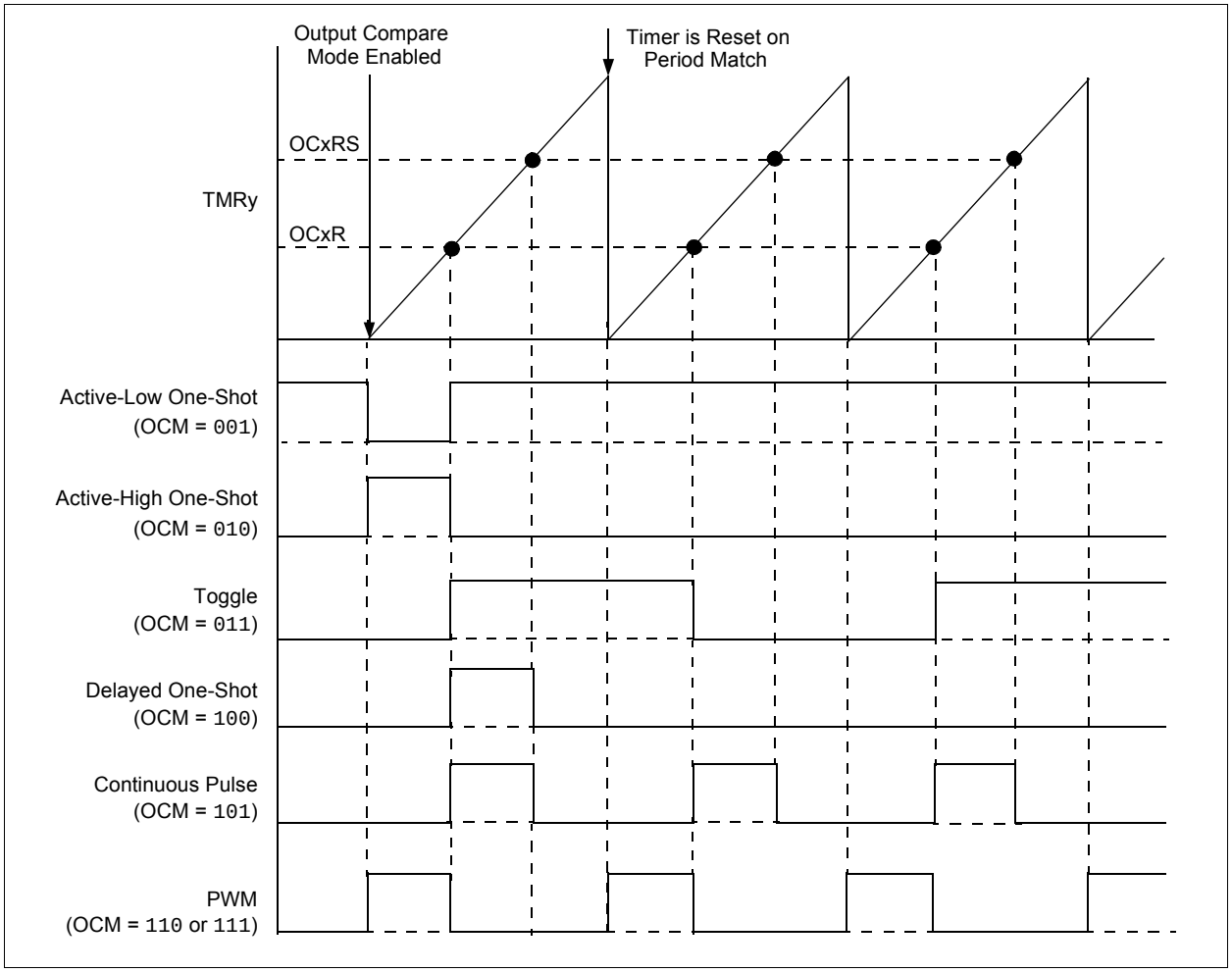

© 2009-2012 Microchip Technology Inc.

REGISTER 15-1: OCxCON: OUTPUT COMPARE x CONTROL REGISTER (x = 1, 2)

U-0	U-0	R/W-0	U-0	U-0	U-0	U-0	U-0
—	—	OCSIDL	—	—	—	—	—
bit 15							bit 8

U-0	U-0	U-0	R-0, HC	R/W-0	R/W-0	R/W-0	R/W-0
—	—	—	OCFLT	OCTSEL	OCM<2:0>		
bit 7							bit 0

Legend:	HC = Hardware Clearable bit		
R = Readable bit	W = Writable bit	U = Unimplemented bit, read as ‘0’	
-n = Value at POR	‘1’ = Bit is set	‘0’ = Bit is cleared	x = Bit is unknown

bit 15-14 **Unimplemented:** Read as ‘0’

bit 13 **OCSIDL:** Stop Output Compare in Idle Mode Control bit
1 = Output Compare x halts in CPU Idle mode
0 = Output Compare x continues to operate in CPU Idle mode

bit 12-5 **Unimplemented:** Read as ‘0’

bit 4 **OCFLT:** PWM Fault Condition Status bit
1 = PWM Fault condition has occurred (cleared in hardware only)
0 = No PWM Fault condition has occurred (this bit is only used when OCM<2:0> = 111)

bit 3 **OCTSEL:** Output Compare Timer Select bit
1 = Timer3 is the clock source for Compare x
0 = Timer2 is the clock source for Compare x

bit 2-0 **OCM<2:0>:** Output Compare Mode Select bits
111 = PWM mode on OCx, Fault pin enabled
110 = PWM mode on OCx, Fault pin disabled
101 = Initialize OCx pin low, generate continuous output pulses on OCx pin
100 = Initialize OCx pin low, generate single output pulse on OCx pin
011 = Compare event toggles OCx pin
010 = Initialize OCx pin high, compare event forces OCx pin low
001 = Initialize OCx pin low, compare event forces OCx pin high
000 = Output compare channel is disabled

NOTES:

© 2009-2012 Microchip Technology Inc.

16.0 SERIAL PERIPHERAL INTERFACE (SPI)

Note 1: This data sheet summarizes the features of the dsPIC33FJXXXGPX06A/X08A/X10A family of devices. However, it is not intended to be a comprehensive reference source. To complement the information in this data sheet, refer to **Section 18. "Serial Peripheral Interface (SPI)"** (DS70206) in the *"dsPIC33F/PIC24H Family Reference Manual"*, which is available from the Microchip web site (www.microchip.com).

2: Some registers and associated bits described in this section may not be available on all devices. Refer to **Section 4.0 "Memory Organization"** in this data sheet for device-specific register and bit information.

The Serial Peripheral Interface (SPI) module is a synchronous serial interface useful for communicating with other peripheral or microcontroller devices. These peripheral devices may be serial EEPROMs, shift registers, display drivers, Analog-to-Digital Converters (ADC), etc. The SPI module is compatible with SPI and SIOP from Motorola®.

Note: In this section, the SPI modules are referred to together as SPIx, or separately as SPI1 and SPI2. Special Function Registers will follow a similar notation. For example, SPIxCON refers to the control register for the SPI1 or SPI2 module.

Each SPI module consists of a 16-bit shift register, SPIxSR (where x = 1 or 2), used for shifting data in and out, and a buffer register, SPIxBUF. A control register, SPIxCON, configures the module. Additionally, a status register, SPIxSTAT, indicates various status conditions.

The serial interface consists of 4 pins: SDIx (serial data input), SDOx (serial data output), SCKx (shift clock input or output), and $\overline{SSx}$ (active-low slave select).

In Master mode operation, SCK is a clock output but in Slave mode, it is a clock input.

FIGURE 16-1: SPI MODULE BLOCK DIAGRAM

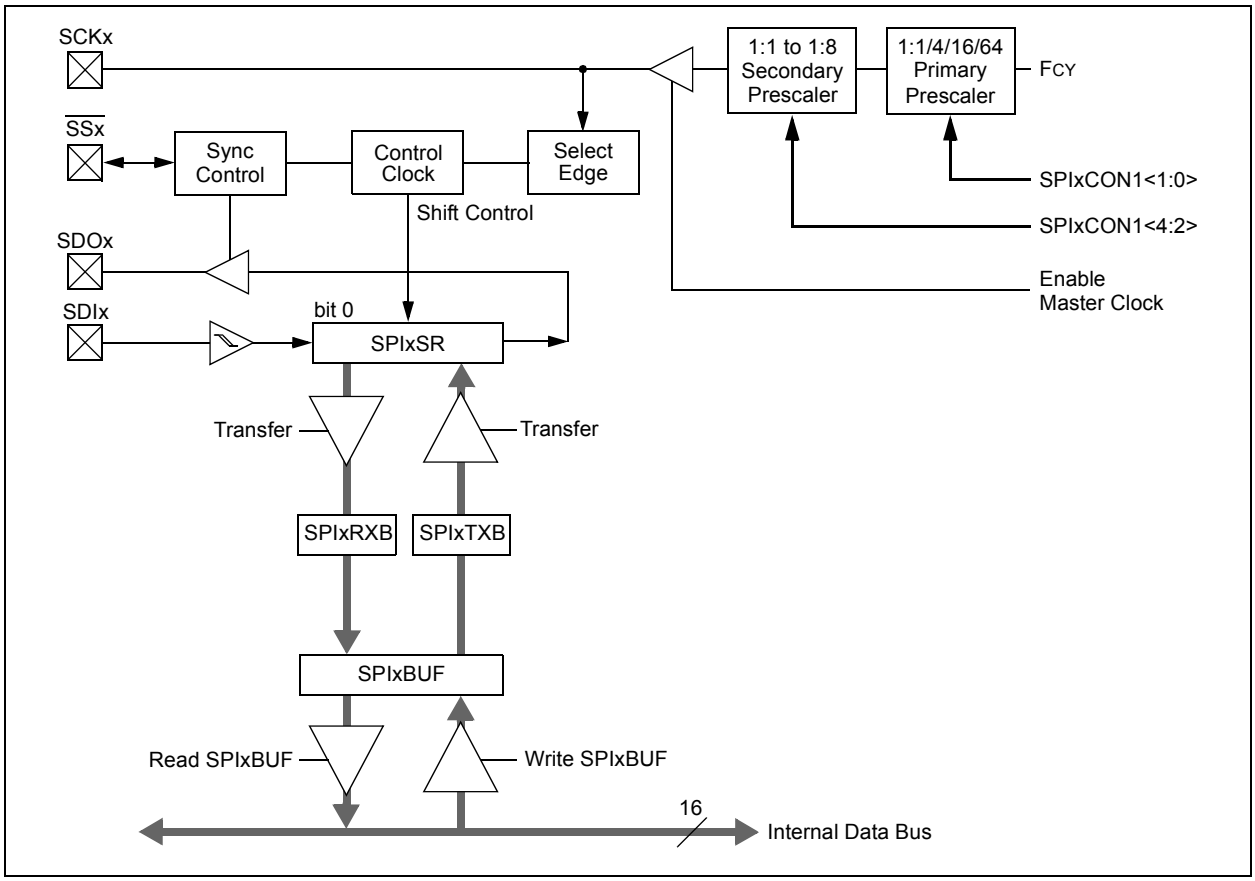

16.1 SPI Helpful Tips

1. In Frame mode, if there is a possibility that the master may not be initialized before the slave:
   a) If FRMPOL (SPIxCON2<13>) = 1, use a pull-down resistor on $\overline{SSx}$.
   b) If FRMPOL = 0, use a pull-up resistor on $\overline{SSx}$.

Note:	This insures that the first frame transmission after initialization is not shifted or corrupted.

2. In non-framed 3-wire mode, (i.e., not using $\overline{SSx}$ from a master):
   a) If CKP (SPIxCON1<6>) = 1, always place a pull-up resistor on $\overline{SSx}$.
   b) If CKP = 0, always place a pull-down resistor on $\overline{SSx}$.

Note:	This will insure that during power-up and initialization the master/slave will not lose sync due to an errant SCK transition that would cause the slave to accumulate data shift errors for both transmit and receive appearing as corrupted data.

3. FRMEN (SPIxCON2<15>) = 1 and SSEN (SPIxCON1<7>) = 1 are exclusive and invalid. In Frame mode, SCKx is continuous and the Frame sync pulse is active on the $\overline{SSx}$ pin, which indicates the start of a data frame.

Note:	Not all third-party devices support Frame mode timing. Refer to the SPI electrical characteristics for details.

4. In Master mode only, set the SMP bit (SPIxCON1<9>) to a '1' for the fastest SPI data rate possible. The SMP bit can only be set at the same time or after the MSTEN bit (SPIxCON1<5>) is set.
5. To avoid invalid slave read data to the master, the user's master software must guarantee enough time for slave software to fill its write buffer before the user application initiates a master write/read cycle. It is always advisable to preload the SPIxBUF transmit register in advance of the next master transaction cycle. SPIxBUF is transferred to the SPI shift register and is empty once the data transmission begins.

16.2 SPI Resources

Many useful resources related to SPI are provided on the main product page of the Microchip web site for the devices listed in this data sheet. This product page, which can be accessed using this link, contains the latest updates and additional information.

Note:	In the event you are not able to access the product page using the link above, enter this URL in your browser: http://www.microchip.com/wwwproducts/Devices.aspx?dDocName=en546064

16.2.1 KEY RESOURCES

- **Section 18. "Serial Peripheral Interface (SPI)"** (DS70206)
- Code Samples
- Application Notes
- Software Libraries
- Webinars
- All related dsPIC33F/PIC24H Family Reference Manuals Sections
- Development Tools

© 2009-2012 Microchip Technology Inc.

16.3 SPI Control Registers

REGISTER 16-1: SPIxSTAT: SPIx STATUS AND CONTROL REGISTER

R/W-0	U-0	R/W-0	U-0	U-0	U-0	U-0	U-0
SPIEN	—	SPISIDL	—	—	—	—	—
bit 15							bit 8

U-0	R/C-0	U-0	U-0	U-0	U-0	R-0	R-0
—	SPIROV	—	—	—	—	SPITBF	SPIRBF
bit 7							bit 0

Legend:	C = Clearable bit		
R = Readable bit	W = Writable bit	U = Unimplemented bit, read as ‘0’	
-n = Value at POR	‘1’ = Bit is set	‘0’ = Bit is cleared	x = Bit is unknown

bit 15 **SPIEN:** SPIx Enable bit
`1` = Enables module and configures SCKx, SDOx, SDIx and $\overline{\text{SSx}}$ as serial port pins
`0` = Disables module

bit 14 **Unimplemented:** Read as ‘`0`’

bit 13 **SPISIDL:** Stop in Idle Mode bit
`1` = Discontinue module operation when device enters Idle mode
`0` = Continue module operation in Idle mode

bit 12-7 **Unimplemented:** Read as ‘`0`’

bit 6 **SPIROV:** Receive Overflow Flag bit
`1` = A new byte/word is completely received and discarded. The user software has not read the previous data in the SPIxBUF register
`0` = No overflow has occurred

bit 5-2 **Unimplemented:** Read as ‘`0`’

bit 1 **SPITBF:** SPIx Transmit Buffer Full Status bit
`1` = Transmit not yet started, SPIxTXB is full
`0` = Transmit started, SPIxTXB is empty
Automatically set in hardware when CPU writes SPIxBUF location, loading SPIxTXB.
Automatically cleared in hardware when SPIx module transfers data from SPIxTXB to SPIxSR.

bit 0 **SPIRBF:** SPIx Receive Buffer Full Status bit
`1` = Receive complete, SPIxRXB is full
`0` = Receive is not complete, SPIxRXB is empty
Automatically set in hardware when SPIx transfers data from SPIxSR to SPIxRXB.
Automatically cleared in hardware when core reads SPIxBUF location, reading SPIxRXB.

REGISTER 16-2: SPIxCON1: SPIx CONTROL REGISTER 1

U-0	U-0	U-0	R/W-0	R/W-0	R/W-0	R/W-0	R/W-0
—	—	—	DISSCK	DISSDO	MODE16	SMP	CKE(1)
bit 15							bit 8

R/W-0	R/W-0	R/W-0	R/W-0	R/W-0	R/W-0	R/W-0	R/W-0
SSEN(3)	CKP	MSTEN	SPRE<2:0>(2)			PPRE<1:0>(2)	
bit 7							bit 0

Legend:			
R = Readable bit	W = Writable bit	U = Unimplemented bit, read as ‘0’	
-n = Value at POR	‘1’ = Bit is set	‘0’ = Bit is cleared	x = Bit is unknown

bit 15-13 **Unimplemented:** Read as ‘0’

bit 12 **DISSCK:** Disable SCKx pin bit (SPI Master modes only)
1 = Internal SPI clock is disabled, pin functions as I/O
0 = Internal SPI clock is enabled

bit 11 **DISSDO:** Disable SDOx pin bit
1 = SDOx pin is not used by module; pin functions as I/O
0 = SDOx pin is controlled by the module

bit 10 **MODE16:** Word/Byte Communication Select bit
1 = Communication is word-wide (16 bits)
0 = Communication is byte-wide (8 bits)

bit 9 **SMP:** SPIx Data Input Sample Phase bit
Master mode:
1 = Input data sampled at end of data output time
0 = Input data sampled at middle of data output time
Slave mode:
SMP must be cleared when SPIx is used in Slave mode.

bit 8 **CKE:** SPIx Clock Edge Select bit(1)
1 = Serial output data changes on transition from active clock state to Idle clock state (see bit 6)
0 = Serial output data changes on transition from Idle clock state to active clock state (see bit 6)

bit 7 **SSEN:** Slave Select Enable bit (Slave mode)(3)
1 = $\overline{\text{SSx}}$ pin used for Slave mode
0 = $\overline{\text{SSx}}$ pin not used by module. Pin controlled by port function

bit 6 **CKP:** Clock Polarity Select bit
1 = Idle state for clock is a high level; active state is a low level
0 = Idle state for clock is a low level; active state is a high level

bit 5 **MSTEN:** Master Mode Enable bit
1 = Master mode
0 = Slave mode

Note 1: The CKE bit is not used in the Framed SPI modes. The user should program this bit to ‘0’ for the Framed SPI modes (FRMEN = 1).
2: Do not set both Primary and Secondary prescalers to a value of 1:1.
3: This bit must be cleared when FRMEN = 1.

© 2009-2012 Microchip Technology Inc.

REGISTER 16-2: SPIxCON1: SPIx CONTROL REGISTER 1 (CONTINUED)

bit 4-2 **SPRE<2:0>:** Secondary Prescale bits (Master mode)[(2)]
111 = Secondary prescale 1:1
110 = Secondary prescale 2:1
•
•
•
000 = Secondary prescale 8:1

bit 1-0 **PPRE<1:0>:** Primary Prescale bits (Master mode)[(2)]
11 = Primary prescale 1:1
10 = Primary prescale 4:1
01 = Primary prescale 16:1
00 = Primary prescale 64:1

Note 1: The CKE bit is not used in the Framed SPI modes. The user should program this bit to '0' for the Framed SPI modes (FRMEN = 1).

2: Do not set both Primary and Secondary prescalers to a value of 1:1.

3: This bit must be cleared when FRMEN = 1.

REGISTER 16-3: SPIxCON2: SPIx CONTROL REGISTER 2

R/W-0	R/W-0	R/W-0	U-0	U-0	U-0	U-0	U-0
FRMEN	SPIFSD	FRMPOL	—	—	—	—	—
bit 15							bit 8

U-0	U-0	U-0	U-0	U-0	U-0	R/W-0	U-0
—	—	—	—	—	—	FRMDLY	—
bit 7							bit 0

Legend:			
R = Readable bit	W = Writable bit	U = Unimplemented bit, read as ‘0’	
-n = Value at POR	‘1’ = Bit is set	‘0’ = Bit is cleared	x = Bit is unknown

bit 15 **FRMEN:** Framed SPIx Support bit
1 = Framed SPIx support enabled ($\overline{SS}$x pin used as frame sync pulse input/output)
0 = Framed SPIx support disabled

bit 14 **SPIFSD:** Frame Sync Pulse Direction Control bit
1 = Frame sync pulse input (slave)
0 = Frame sync pulse output (master)

bit 13 **FRMPOL:** Frame Sync Pulse Polarity bit
1 = Frame sync pulse is active-high
0 = Frame sync pulse is active-low

bit 12-2 **Unimplemented:** Read as ‘0’

bit 1 **FRMDLY:** Frame Sync Pulse Edge Select bit
1 = Frame sync pulse coincides with first bit clock
0 = Frame sync pulse precedes first bit clock

bit 0 **Unimplemented:** Read as ‘0’
This bit must not be set to ‘1’ by the user application.

© 2009-2012 Microchip Technology Inc.

17.0 INTER-INTEGRATED CIRCUIT™ (I^2C™)

Note 1: This data sheet summarizes the features of the dsPIC33FJXXXGPX06A/X08A/X10A family of devices. However, it is not intended to be a comprehensive reference source. To complement the information in this data sheet, refer to **Section 19. "Inter-Integrated Circuit™ (I^2C™)"** (DS70195) in the *"dsPIC33F/PIC24H Family Reference Manual"*, which is available from the Microchip web site (www.microchip.com).

2: Some registers and associated bits described in this section may not be available on all devices. Refer to **Section 4.0 "Memory Organization"** in this data sheet for device-specific register and bit information.

The Inter-Integrated Circuit (I^2C) module provides complete hardware support for both Slave and Multi-Master modes of the I^2C serial communication standard, with a 16-bit interface.

The dsPIC33FJXXXGPX06A/X08A/X10A devices have up to two I^2C interface modules, denoted as I2C1 and I2C2. Each I^2C module has a 2-pin interface: the SCLx pin is clock and the SDAx pin is data.

Each I^2C module 'x' (x = 1 or 2) offers the following key features:

- I^2C interface supporting both master and slave operation
- I^2C Slave mode supports 7-bit and 10-bit addressing
- I^2C Master mode supports 7-bit and 10-bit addressing
- I^2C Port allows bidirectional transfers between master and slaves
- Serial clock synchronization for I^2C port can be used as a handshake mechanism to suspend and resume serial transfer (SCLREL control)
- I^2C supports multi-master operation; detects bus collision and will arbitrate accordingly

17.1 Operating Modes

The hardware fully implements all the master and slave functions of the I^2C Standard and Fast mode specifications, as well as 7 and 10-bit addressing.

The I^2C module can operate either as a slave or a master on an I^2C bus.

The following types of I^2C operation are supported:

- I^2C slave operation with 7-bit addressing
- I^2C slave operation with 10-bit addressing
- I^2C master operation with 7-bit or 10-bit addressing

For details about the communication sequence in each of these modes, please refer to the "*dsPIC33F/PIC24H Family Reference Manual*".

FIGURE 17-1: I²C™ BLOCK DIAGRAM (x = 1 OR 2)

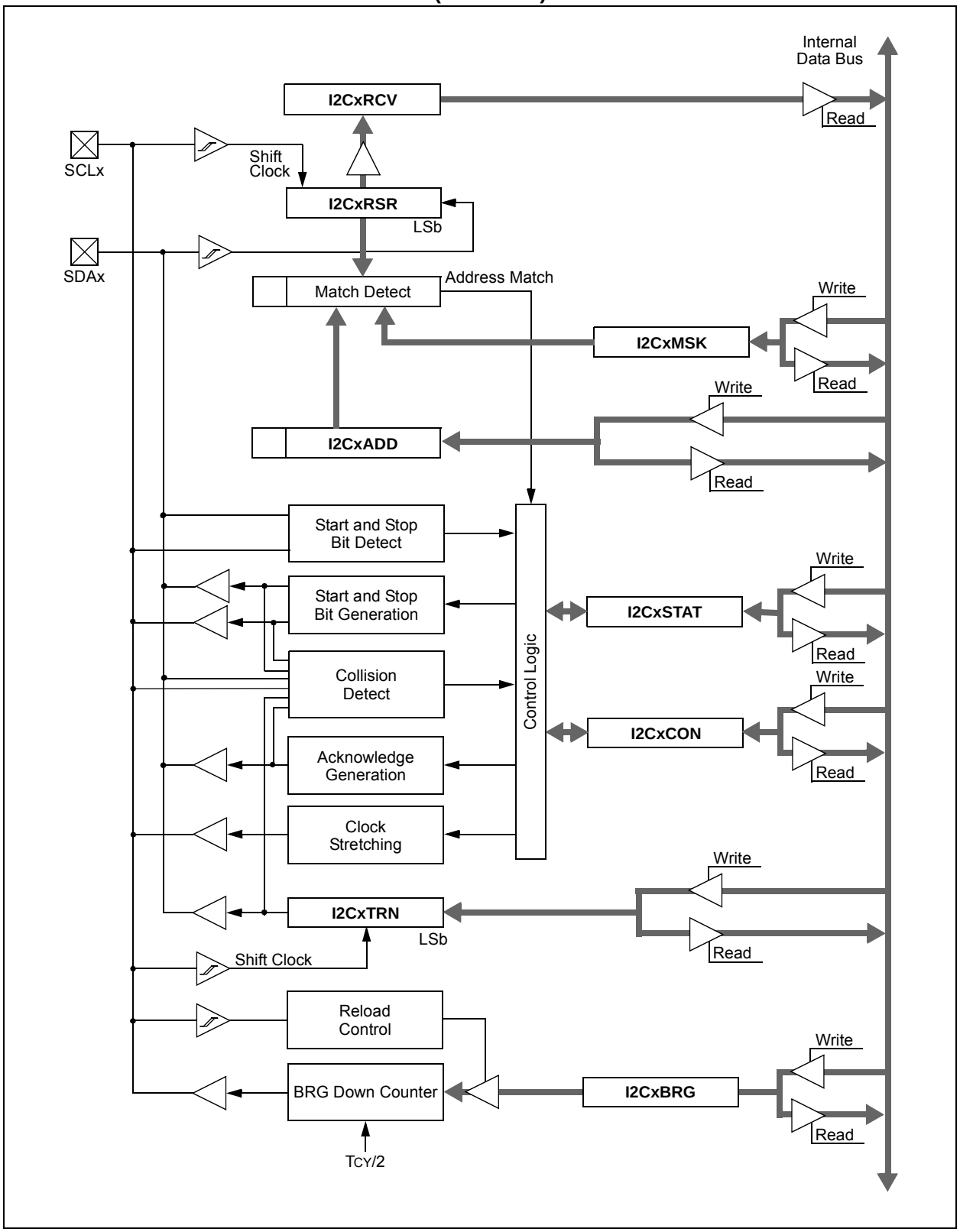

© 2009-2012 Microchip Technology Inc.

17.2 ^{2}C Resources

Many useful resources related to I^{2}C are provided on the main product page of the Microchip web site for the devices listed in this data sheet. This product page, which can be accessed using this link, contains the latest updates and additional information.

Note: In the event you are not able to access the product page using the link above, enter this URL in your browser: http://www.microchip.com/wwwproducts/Devices.aspx?dDocName=en546064

17.2.1 KEY RESOURCES

- **Section 11. "Inter-Integrated Circuit™ (I^{2}C™)"** (DS70195)
- Code Samples
- Application Notes
- Software Libraries
- Webinars
- All related dsPIC33F/PIC24H Family Reference Manuals Sections
- Development Tools

17.3 I^{2}C Control Registers

I2CxCON and I2CxSTAT are control and status registers, respectively. The I2CxCON register is readable and writable. The lower six bits of I2CxSTAT are read-only. The remaining bits of the I2CSTAT are read/write.

I2CxRSR is the shift register used for shifting data, whereas I2CxRCV is the buffer register to which data bytes are written, or from which data bytes are read. I2CxRCV is the receive buffer. I2CxTRN is the transmit register to which bytes are written during a transmit operation.

The I2CxADD register holds the slave address. A status bit, ADD10, indicates 10-bit Address mode. The I2CxBRG acts as the Baud Rate Generator (BRG) reload value.

In receive operations, I2CxRSR and I2CxRCV together form a double-buffered receiver. When I2CxRSR receives a complete byte, it is transferred to I2CxRCV and an interrupt pulse is generated.

REGISTER 17-1: I2CxCON: I2Cx CONTROL REGISTER

R/W-0	U-0	R/W-0	R/W-1 HC	R/W-0	R/W-0	R/W-0	R/W-0
I2CEN	—	I2CSIDL	SCLREL	IPMIEN	A10M	DISSLW	SMEN
bit 15							bit 8

R/W-0	R/W-0	R/W-0	R/W-0 HC	R/W-0 HC	R/W-0 HC	R/W-0 HC	R/W-0 HC
GCEN	STREN	ACKDT	ACKEN	RCEN	PEN	RSEN	SEN
bit 7							bit 0

Legend:	U = Unimplemented bit, read as ‘0’		
R = Readable bit	W = Writable bit	HS = Set in hardware	HC = Cleared in hardware
-n = Value at POR	‘1’ = Bit is set	‘0’ = Bit is cleared	x = Bit is unknown

bit 15 **I2CEN:** I2Cx Enable bit
1 = Enables the I2Cx module and configures the SDAx and SCLx pins as serial port pins
0 = Disables the I2Cx module. All I^2C pins are controlled by port functions

bit 14 **Unimplemented:** Read as ‘0’

bit 13 **I2CSIDL:** Stop in Idle Mode bit
1 = Discontinue module operation when device enters an Idle mode
0 = Continue module operation in Idle mode

bit 12 **SCLREL:** SCLx Release Control bit (when operating as I^2C slave)
1 = Release SCLx clock
0 = Hold SCLx clock low (clock stretch)
If STREN = 1:
Bit is R/W (i.e., software may write ‘0’ to initiate stretch and write ‘1’ to release clock). Hardware clear at beginning of slave transmission. Hardware clear at end of slave reception.
If STREN = 0:
Bit is R/S (i.e., software may only write ‘1’ to release clock). Hardware clear at beginning of slave transmission.

bit 11 **IPMIEN:** Intelligent Peripheral Management Interface (IPMI) Enable bit
1 = IPMI mode is enabled; all addresses Acknowledged
0 = IPMI mode disabled

bit 10 **A10M:** 10-bit Slave Address bit
1 = I2CxADD is a 10-bit slave address
0 = I2CxADD is a 7-bit slave address

bit 9 **DISSLW:** Disable Slew Rate Control bit
1 = Slew rate control disabled
0 = Slew rate control enabled

bit 8 **SMEN:** SMBus Input Levels bit
1 = Enable I/O pin thresholds compliant with SMBus specification
0 = Disable SMBus input thresholds

bit 7 **GCEN:** General Call Enable bit (when operating as I^2C slave)
1 = Enable interrupt when a general call address is received in the I2CxRSR (module is enabled for reception)
0 = General call address disabled

bit 6 **STREN:** SCLx Clock Stretch Enable bit (when operating as I^2C slave)
Used in conjunction with SCLREL bit.
1 = Enable software or receive clock stretching
0 = Disable software or receive clock stretching

© 2009-2012 Microchip Technology Inc.

REGISTER 17-1: I2CxCON: I2Cx CONTROL REGISTER (CONTINUED)

bit 5 **ACKDT:** Acknowledge Data bit (when operating as I^2C master, applicable during master receive)
Value that will be transmitted when the software initiates an Acknowledge sequence.
1 = Send NACK during Acknowledge
0 = Send ACK during Acknowledge

bit 4 **ACKEN:** Acknowledge Sequence Enable bit
(when operating as I^2C master, applicable during master receive)
1 = Initiate Acknowledge sequence on SDAx and SCLx pins and transmit ACKDT data bit. Hardware clear at end of master Acknowledge sequence
0 = Acknowledge sequence not in progress

bit 3 **RCEN:** Receive Enable bit (when operating as I^2C master)
1 = Enables Receive mode for I^2C. Hardware clear at end of eighth bit of master receive data byte
0 = Receive sequence not in progress

bit 2 **PEN:** Stop Condition Enable bit (when operating as I^2C master)
1 = Initiate Stop condition on SDAx and SCLx pins. Hardware clear at end of master Stop sequence
0 = Stop condition not in progress

bit 1 **RSEN:** Repeated Start Condition Enable bit (when operating as I^2C master)
1 = Initiate Repeated Start condition on SDAx and SCLx pins. Hardware clear at end of master Repeated Start sequence
0 = Repeated Start condition not in progress

bit 0 **SEN:** Start Condition Enable bit (when operating as I^2C master)
1 = Initiate Start condition on SDAx and SCLx pins. Hardware clear at end of master Start sequence
0 = Start condition not in progress

REGISTER 17-2: I2CxSTAT: I2Cx STATUS REGISTER

R-0 HSC	R-0 HSC	U-0	U-0	U-0	R/C-0 HS	R-0 HSC	R-0 HSC
ACKSTAT	TRSTAT	—	—	—	BCL	GCSTAT	ADD10
bit 15							bit 8

R/C-0 HS	R/C-0 HS	R-0 HSC	R/C-0 HSC	R/C-0 HSC	R-0 HSC	R-0 HSC	R-0 HSC
IWCOL	I2COV	D_A	P	S	R_W	RBF	TBF
bit 7							bit 0

Legend:	U = Unimplemented bit, read as ‘0’		C = Clear only bit
R = Readable bit	W = Writable bit	HS = Set in hardware	HSC = Hardware set/cleared
-n = Value at POR	‘1’ = Bit is set	‘0’ = Bit is cleared	x = Bit is unknown

bit 15 **ACKSTAT:** Acknowledge Status bit
(when operating as I^2C master, applicable to master transmit operation)
1 = NACK received from slave
0 = ACK received from slave
Hardware set or clear at end of slave Acknowledge.

bit 14 **TRSTAT:** Transmit Status bit (when operating as I^2C master, applicable to master transmit operation)
1 = Master transmit is in progress (8 bits + ACK)
0 = Master transmit is not in progress
Hardware set at beginning of master transmission. Hardware clear at end of slave Acknowledge.

bit 13-11 **Unimplemented:** Read as ‘0’

bit 10 **BCL:** Master Bus Collision Detect bit
1 = A bus collision has been detected during a master operation
0 = No collision
Hardware set at detection of bus collision.

bit 9 **GCSTAT:** General Call Status bit
1 = General call address was received
0 = General call address was not received
Hardware set when address matches general call address. Hardware clear at Stop detection.

bit 8 **ADD10:** 10-Bit Address Status bit
1 = 10-bit address was matched
0 = 10-bit address was not matched
Hardware set at match of 2nd byte of matched 10-bit address. Hardware clear at Stop detection.

bit 7 **IWCOL:** Write Collision Detect bit
1 = An attempt to write the I2CxTRN register failed because the I^2C module is busy
0 = No collision
Hardware set at occurrence of write to I2CxTRN while busy (cleared by software).

bit 6 **I2COV:** Receive Overflow Flag bit
1 = A byte was received while the I2CxRCV register is still holding the previous byte
0 = No overflow
Hardware set at attempt to transfer I2CxRSR to I2CxRCV (cleared by software).

bit 5 **D_A:** Data/Address bit (when operating as I^2C slave)
1 = Indicates that the last byte received was data
0 = Indicates that the last byte received was device address
Hardware clear at device address match. Hardware set by reception of slave byte.

bit 4 **P:** Stop bit
1 = Indicates that a Stop bit has been detected last
0 = Stop bit was not detected last
Hardware set or clear when Start, Repeated Start or Stop detected.

© 2009-2012 Microchip Technology Inc.

REGISTER 17-2: I2CxSTAT: I2Cx STATUS REGISTER (CONTINUED)

bit 3 **S:** Start bit

1 = Indicates that a Start (or Repeated Start) bit has been detected last
0 = Start bit was not detected last
Hardware set or clear when Start, Repeated Start or Stop detected.

bit 2 **R_W:** Read/Write Information bit (when operating as I^2C slave)

1 = Read - indicates data transfer is output from slave
0 = Write - indicates data transfer is input to slave
Hardware set or clear after reception of I^2C device address byte.

bit 1 **RBF:** Receive Buffer Full Status bit

1 = Receive complete, I2CxRCV is full
0 = Receive not complete, I2CxRCV is empty
Hardware set when I2CxRCV is written with received byte. Hardware clear when software reads I2CxRCV.

bit 0 **TBF:** Transmit Buffer Full Status bit

1 = Transmit in progress, I2CxTRN is full
0 = Transmit complete, I2CxTRN is empty
Hardware set when software writes I2CxTRN. Hardware clear at completion of data transmission.

REGISTER 17-3: I2CxMSK: I2Cx SLAVE MODE ADDRESS MASK REGISTER

U-0	U-0	U-0	U-0	U-0	U-0	R/W-0	R/W-0
—	—	—	—	—	—	AMSK9	AMSK8
bit 15							bit 8

R/W-0	R/W-0	R/W-0	R/W-0	R/W-0	R/W-0	R/W-0	R/W-0
AMSK7	AMSK6	AMSK5	AMSK4	AMSK3	AMSK2	AMSK1	AMSK0
bit 7							bit 0

Legend:			
R = Readable bit	W = Writable bit	U = Unimplemented bit, read as ‘0’	
-n = Value at POR	‘1’ = Bit is set	‘0’ = Bit is cleared	x = Bit is unknown

bit 15-10 **Unimplemented:** Read as ‘0’

bit 9-0 **AMSKx:** Mask for Address Bit x Select bit

1 = Enable masking for bit x of incoming message address; bit match not required in this position
0 = Disable masking for bit x; bit match required in this position

© 2009-2012 Microchip Technology Inc.

18.0 UNIVERSAL ASYNCHRONOUS RECEIVER TRANSMITTER (UART)

Note 1: This data sheet summarizes the features of the dsPIC33FJXXXGPX06A/X08A/X10A family of devices. However, it is not intended to be a comprehensive reference source. To complement the information in this data sheet, refer to **Section 17. "UART"** (DS70188) in the *"dsPIC33F/PIC24H Family Reference Manual"*, which is available from the Microchip web site (www.microchip.com).

2: Some registers and associated bits described in this section may not be available on all devices. Refer to **Section 4.0 "Memory Organization"** in this data sheet for device-specific register and bit information.

The Universal Asynchronous Receiver Transmitter (UART) module is one of the serial I/O modules available in the dsPIC33FJXXXGPX06A/X08A/X10A device family. The UART is a full-duplex asynchronous system that can communicate with peripheral devices, such as personal computers, LIN, RS-232 and RS-485 interfaces. The module also supports a hardware flow control option with the $\overline{\text{UxCTS}}$ and $\overline{\text{UxRTS}}$ pins and also includes an IrDA® encoder and decoder.

The primary features of the UART module are:

- Full-Duplex, 8 or 9-bit Data Transmission through the UxTX and UxRX pins
- Even, Odd or No Parity Options (for 8-bit data)
- One or Two Stop bits
- Hardware Flow Control Option with $\overline{\text{UxCTS}}$ and $\overline{\text{UxRTS}}$ pins
- Fully Integrated Baud Rate Generator with 16-bit Prescaler
- Baud rates ranging from 10 Mbps to 38 bps at 40 MIPS
- 4-deep First-In-First-Out (FIFO) Transmit Data Buffer
- 4-Deep FIFO Receive Data Buffer
- Parity, Framing and Buffer Overrun Error Detection
- Support for 9-bit mode with Address Detect (9th bit = 1)
- Transmit and Receive Interrupts
- A Separate Interrupt for all UART Error Conditions
- Loopback mode for Diagnostic Support
- Support for Sync and Break Characters
- Supports Automatic Baud Rate Detection
- IrDA® Encoder and Decoder Logic
- 16x Baud Clock Output for IrDA® Support

A simplified block diagram of the UART is shown in Figure 18-1. The UART module consists of the key important hardware elements:

- Baud Rate Generator
- Asynchronous Transmitter
- Asynchronous Receiver

FIGURE 18-1: UART SIMPLIFIED BLOCK DIAGRAM

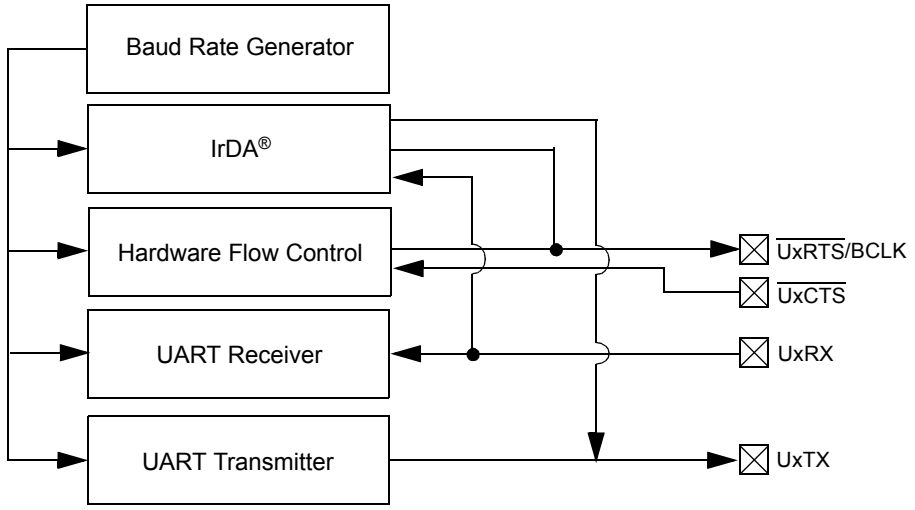

Note 1: Both UART1 and UART2 can trigger a DMA data transfer. If U1TX, U1RX, U2TX or U2RX is selected as a DMA IRQ source, a DMA transfer occurs when the U1TXIF, U1RXIF, U2TXIF or U2RXIF bit gets set as a result of a UART1 or UART2 transmission or reception.

2: If DMA transfers are required, the UART TX/RX FIFO buffer must be set to a size of 1 byte/word (i.e., UTXISEL<1:0> = 00 and URXISEL<1:0> = 00).

18.1 UART Helpful Tips

1. In multi-node direct-connect UART networks, UART receive inputs react to the complementary logic level defined by the URXINV bit (UxMODE<4>), which defines the idle state, the default of which is logic high, (i.e., URXINV = 0). Because remote devices do not initialize at the same time, it is likely that one of the devices, because the RX line is floating, will trigger a start bit detection and will cause the first byte received after the device has been initialized to be invalid. To avoid this situation, the user should use a pull-up or pull-down resistor on the RX pin depending on the value of the URXINV bit.
   a) If URXINV = 0, use a pull-up resistor on the RX pin.
   b) If URXINV = 1, use a pull-down resistor on the RX pin.
2. The first character received on a wake-up from Sleep mode caused by activity on the UxRX pin of the UART module will be invalid. In Sleep mode, peripheral clocks are disabled. By the time the oscillator system has restarted and stabilized from Sleep mode, the baud rate bit sampling clock relative to the incoming UxRX bit timing is no longer synchronized, resulting in the first character being invalid. This is to be expected.

18.2 UART Resources

Many useful resources related to UART are provided on the main product page of the Microchip web site for the devices listed in this data sheet. This product page, which can be accessed using this link, contains the latest updates and additional information.

Note:	In the event you are not able to access the product page using the link above, enter this URL in your browser: http://www.microchip.com/wwwproducts/Devices.aspx?dDocName=en546064

18.2.1 KEY RESOURCES

- **Section 17. "UART"** (DS70188)
- Code Samples
- Application Notes
- Software Libraries
- Webinars
- All related dsPIC33F/PIC24H Family Reference Manuals Sections
- Development Tools

© 2009-2012 Microchip Technology Inc.

18.3 UART Control Registers

REGISTER 18-1: UxMODE: UARTx MODE REGISTER

R/W-0	U-0	R/W-0	R/W-0	R/W-0	U-0	R/W-0	R/W-0
UARTEN(1)	—	USIDL	IREN(2)	RTSMD	—	UEN<1:0>	
bit 15							bit 8

R/W-0 HC	R/W-0	R/W-0 HC	R/W-0	R/W-0	R/W-0	R/W-0	R/W-0
WAKE	LPBACK	ABAUD	URXINV	BRGH	PDSEL<1:0>		STSEL
bit 7							bit 0

Legend:	HC = Hardware cleared		
R = Readable bit	W = Writable bit	U = Unimplemented bit, read as ‘0’	
-n = Value at POR	‘1’ = Bit is set	‘0’ = Bit is cleared	x = Bit is unknown

bit 15 **UARTEN:** UARTx Enable bit(1)
- 1 = UARTx is enabled; all UARTx pins are controlled by UARTx as defined by UEN<1:0>
- 0 = UARTx is disabled; all UARTx pins are controlled by port latches; UARTx power consumption minimal

bit 14 **Unimplemented:** Read as ‘0’

bit 13 **USIDL:** Stop in Idle Mode bit
- 1 = Discontinue module operation when device enters Idle mode
- 0 = Continue module operation in Idle mode

bit 12 **IREN:** IrDA® Encoder and Decoder Enable bit(2)
- 1 = IrDA® encoder and decoder enabled
- 0 = IrDA® encoder and decoder disabled

bit 11 **RTSMD:** Mode Selection for $\overline{\text{UxRTS}}$ Pin bit
- 1 = $\overline{\text{UxRTS}}$ pin in Simplex mode
- 0 = $\overline{\text{UxRTS}}$ pin in Flow Control mode

bit 10 **Unimplemented:** Read as ‘0’

bit 9-8 **UEN<1:0>:** UARTx Pin Enable bits
- 11 = UxTX, UxRX and BCLK pins are enabled and used; $\overline{\text{UxCTS}}$ pin controlled by port latches
- 10 = UxTX, UxRX, $\overline{\text{UxCTS}}$ and $\overline{\text{UxRTS}}$ pins are enabled and used
- 01 = UxTX, UxRX and $\overline{\text{UxRTS}}$ pins are enabled and used; $\overline{\text{UxCTS}}$ pin controlled by port latches
- 00 = UxTX and UxRX pins are enabled and used; $\overline{\text{UxCTS}}$ and $\overline{\text{UxRTS}}$/BCLK pins controlled by port latches

bit 7 **WAKE:** Wake-up on Start bit Detect During Sleep Mode Enable bit
- 1 = UARTx will continue to sample the UxRX pin; interrupt generated on falling edge; bit cleared in hardware on following rising edge
- 0 = No wake-up enabled

bit 6 **LPBACK:** UARTx Loopback Mode Select bit
- 1 = Enable Loopback mode
- 0 = Loopback mode is disabled

bit 5 **ABAUD:** Auto-Baud Enable bit
- 1 = Enable baud rate measurement on the next character - requires reception of a Sync field (55h) before other data; cleared in hardware upon completion
- 0 = Baud rate measurement disabled or completed

Note 1: Refer to **Section 17. “UART”** (DS70188) in the *“dsPIC33F/PIC24H Family Reference Manual”* for information on enabling the UART module for receive or transmit operation.

2: This feature is only available for the 16x BRG mode (BRGH = 0).

REGISTER 18-1: UxMODE: UARTx MODE REGISTER (CONTINUED)

bit 4 **URXINV:** Receive Polarity Inversion bit
1 = UxRX Idle state is '0'
0 = UxRX Idle state is '1'

bit 3 **BRGH:** High Baud Rate Enable bit
1 = BRG generates 4 clocks per bit period (4x baud clock, High-Speed mode)
0 = BRG generates 16 clocks per bit period (16x baud clock, Standard mode)

bit 2-1 **PDSEL<1:0>:** Parity and Data Selection bits
11 = 9-bit data, no parity
10 = 8-bit data, odd parity
01 = 8-bit data, even parity
00 = 8-bit data, no parity

bit 0 **STSEL:** Stop Bit Selection bit
1 = Two Stop bits
0 = One Stop bit

Note 1: Refer to **Section 17. "UART"** (DS70188) in the *"dsPIC33F/PIC24H Family Reference Manual"* for information on enabling the UART module for receive or transmit operation.

2: This feature is only available for the 16x BRG mode (BRGH = 0).

© 2009-2012 Microchip Technology Inc.

REGISTER 18-2: UxSTA: UARTx STATUS AND CONTROL REGISTER

R/W-0	R/W-0	R/W-0	U-0	R/W-0 HC	R/W-0	R-0	R-1
UTXISEL1	UTXINV	UTXISEL0	—	UTXBRK	UTXEN(1)	UTXBF	TRMT
bit 15							bit 8

R/W-0	R/W-0	R/W-0	R-1	R-0	R-0	R/C-0	R-0
URXISEL<1:0>		ADDEN	RIDLE	PERR	FERR	OERR	URXDA
bit 7							bit 0

Legend:	HC = Hardware cleared	C = Clear only bit	
R = Readable bit	W = Writable bit	U = Unimplemented bit, read as ‘0’	
-n = Value at POR	‘1’ = Bit is set	‘0’ = Bit is cleared	x = Bit is unknown

bit 15,13 **UTXISEL<1:0>:** Transmission Interrupt Mode Selection bits
- 11 = Reserved; do not use
- 10 = Interrupt when a character is transferred to the Transmit Shift Register, and as a result, the transmit buffer becomes empty
- 01 = Interrupt when the last character is shifted out of the Transmit Shift Register; all transmit operations are completed
- 00 = Interrupt when a character is transferred to the Transmit Shift Register (this implies there is at least one character open in the transmit buffer)

bit 14 **UTXINV:** Transmit Polarity Inversion bit

If IREN = 0:
- 1 = UxTX Idle state is ‘0’
- 0 = UxTX Idle state is ‘1’

If IREN = 1:
- 1 = IrDA® encoded UxTX Idle state is ‘1’
- 0 = IrDA® encoded UxTX Idle state is ‘0’

bit 12 **Unimplemented:** Read as ‘0’

bit 11 **UTXBRK:** Transmit Break bit
- 1 = Send Sync Break on next transmission - Start bit, followed by twelve ‘0’ bits, followed by Stop bit; cleared by hardware upon completion
- 0 = Sync Break transmission disabled or completed

bit 10 **UTXEN:** Transmit Enable bit(1)
- 1 = Transmit enabled, UxTX pin controlled by UARTx
- 0 = Transmit disabled, any pending transmission is aborted and buffer is reset. UxTX pin controlled by port

bit 9 **UTXBF:** Transmit Buffer Full Status bit (read-only)
- 1 = Transmit buffer is full
- 0 = Transmit buffer is not full, at least one more character can be written

bit 8 **TRMT:** Transmit Shift Register Empty bit (read-only)
- 1 = Transmit Shift Register is empty and transmit buffer is empty (the last transmission has completed)
- 0 = Transmit Shift Register is not empty, a transmission is in progress or queued

bit 7-6 **URXISEL<1:0>:** Receive Interrupt Mode Selection bits
- 11 = Interrupt is set on UxRSR transfer making the receive buffer full (i.e., has 4 data characters)
- 10 = Interrupt is set on UxRSR transfer making the receive buffer 3/4 full (i.e., has 3 data characters)
- 0x = Interrupt is set when any character is received and transferred from the UxRSR to the receive buffer. Receive buffer has one or more characters

Note 1: Refer to **Section 17. “UART”** (DS70188) in the *“dsPIC33F/PIC24H Family Reference Manual”* for information on enabling the UART module for transmit operation.

REGISTER 18-2: UxSTA: UARTx STATUS AND CONTROL REGISTER (CONTINUED)

bit 5 **ADDEN:** Address Character Detect bit (bit 8 of received data = 1)
- 1 = Address Detect mode enabled. If 9-bit mode is not selected, this does not take effect
- 0 = Address Detect mode disabled

bit 4 **RIDLE:** Receiver Idle bit (read-only)
- 1 = Receiver is Idle
- 0 = Receiver is active

bit 3 **PERR:** Parity Error Status bit (read-only)
- 1 = Parity error has been detected for the current character (character at the top of the receive FIFO)
- 0 = Parity error has not been detected

bit 2 **FERR:** Framing Error Status bit (read-only)
- 1 = Framing error has been detected for the current character (character at the top of the receive FIFO)
- 0 = Framing error has not been detected

bit 1 **OERR:** Receive Buffer Overrun Error Status bit (read/clear only)
- 1 = Receive buffer has overflowed
- 0 = Receive buffer has not overflowed. Clearing a previously set OERR bit (1 → 0 transition) will reset the receiver buffer and the UxRSR to the empty state

bit 0 **URXDA:** Receive Buffer Data Available bit (read-only)
- 1 = Receive buffer has data, at least one more character can be read
- 0 = Receive buffer is empty

Note 1: Refer to **Section 17. "UART"** (DS70188) in the *"dsPIC33F/PIC24H Family Reference Manual"* for information on enabling the UART module for transmit operation.

© 2009-2012 Microchip Technology Inc.

19.0 ENHANCED CAN (ECAN™) MODULE

Note 1: This data sheet summarizes the features of the dsPIC33FJXXXGPX06A/X08A/X10A family of devices. However, it is not intended to be a comprehensive reference source. To complement the information in this data sheet, refer to **Section 21. "Enhanced Controller Area Network (ECAN™)"** (DS70185) in the *"dsPIC33F/PIC24H Family Reference Manual"*, which is available from the Microchip web site (www.microchip.com).

2: Some registers and associated bits described in this section may not be available on all devices. Refer to **Section 4.0 "Memory Organization"** in this data sheet for device-specific register and bit information.

19.1 Overview

The Enhanced Controller Area Network (ECAN) module is a serial interface, useful for communicating with other CAN modules or microcontroller devices. This interface/protocol was designed to allow communications within noisy environments. The dsPIC33FJXXXGPX06A/X08A/X10A devices contain up to two ECAN modules.

The CAN module is a communication controller implementing the CAN 2.0 A/B protocol, as defined in the BOSCH specification. The module will support CAN 1.2, CAN 2.0A, CAN 2.0B Passive and CAN 2.0B Active versions of the protocol. The module implementation is a full CAN system. The CAN specification is not covered within this data sheet. The reader may refer to the BOSCH CAN specification for further details.

The module features are as follows:

- Implementation of the CAN protocol, CAN 1.2, CAN 2.0A and CAN 2.0B
- Standard and extended data frames
- 0-8 bytes data length
- Programmable bit rate up to 1 Mbit/sec
- Automatic response to remote transmission requests
- Up to eight transmit buffers with application specified prioritization and abort capability (each buffer may contain up to 8 bytes of data)
- Up to 32 receive buffers (each buffer may contain up to 8 bytes of data)
- Up to 16 full (standard/extended identifier) acceptance filters
- Three full acceptance filter masks
- DeviceNet™ addressing support
- Programmable wake-up functionality with integrated low-pass filter
- Programmable Loopback mode supports self-test operation
- Signaling via interrupt capabilities for all CAN receiver and transmitter error states
- Programmable clock source
- Programmable link to input capture module (IC2 for both CAN1 and CAN2) for time-stamping and network synchronization
- Low-power Sleep and Idle mode

The CAN bus module consists of a protocol engine and message buffering/control. The CAN protocol engine handles all functions for receiving and transmitting messages on the CAN bus. Messages are transmitted by first loading the appropriate data registers. Status and errors can be checked by reading the appropriate registers. Any message detected on the CAN bus is checked for errors and then matched against filters to see if it should be received and stored in one of the receive registers.

19.2 Frame Types

The CAN module transmits various types of frames which include data messages, or remote transmission requests initiated by the user, as other frames that are automatically generated for control purposes. The following frame types are supported:

- Standard Data Frame:

  A standard data frame is generated by a node when the node wishes to transmit data. It includes an 11-bit Standard Identifier (SID), but not an 18-bit Extended Identifier (EID).

- Extended Data Frame:

  An extended data frame is similar to a standard data frame, but also includes an extended identifier.

- Remote Frame:

  It is possible for a destination node to request the data from the source. For this purpose, the destination node sends a remote frame with an identifier that matches the identifier of the required data frame. The appropriate data source node will then send a data frame as a response to this remote request.

- Error Frame:

  An error frame is generated by any node that detects a bus error. An error frame consists of two fields: an error flag field and an error delimiter field.

- Overload Frame:

  An overload frame can be generated by a node as a result of two conditions. First, the node detects a dominant bit during interframe space which is an illegal condition. Second, due to internal conditions, the node is not yet able to start reception of the next message. A node may generate a maximum of two sequential overload frames to delay the start of the next message.

- Interframe Space:

  Interframe space separates a proceeding frame (of whatever type) from a following data or remote frame.

FIGURE 19-1: ECAN™ MODULE BLOCK DIAGRAM

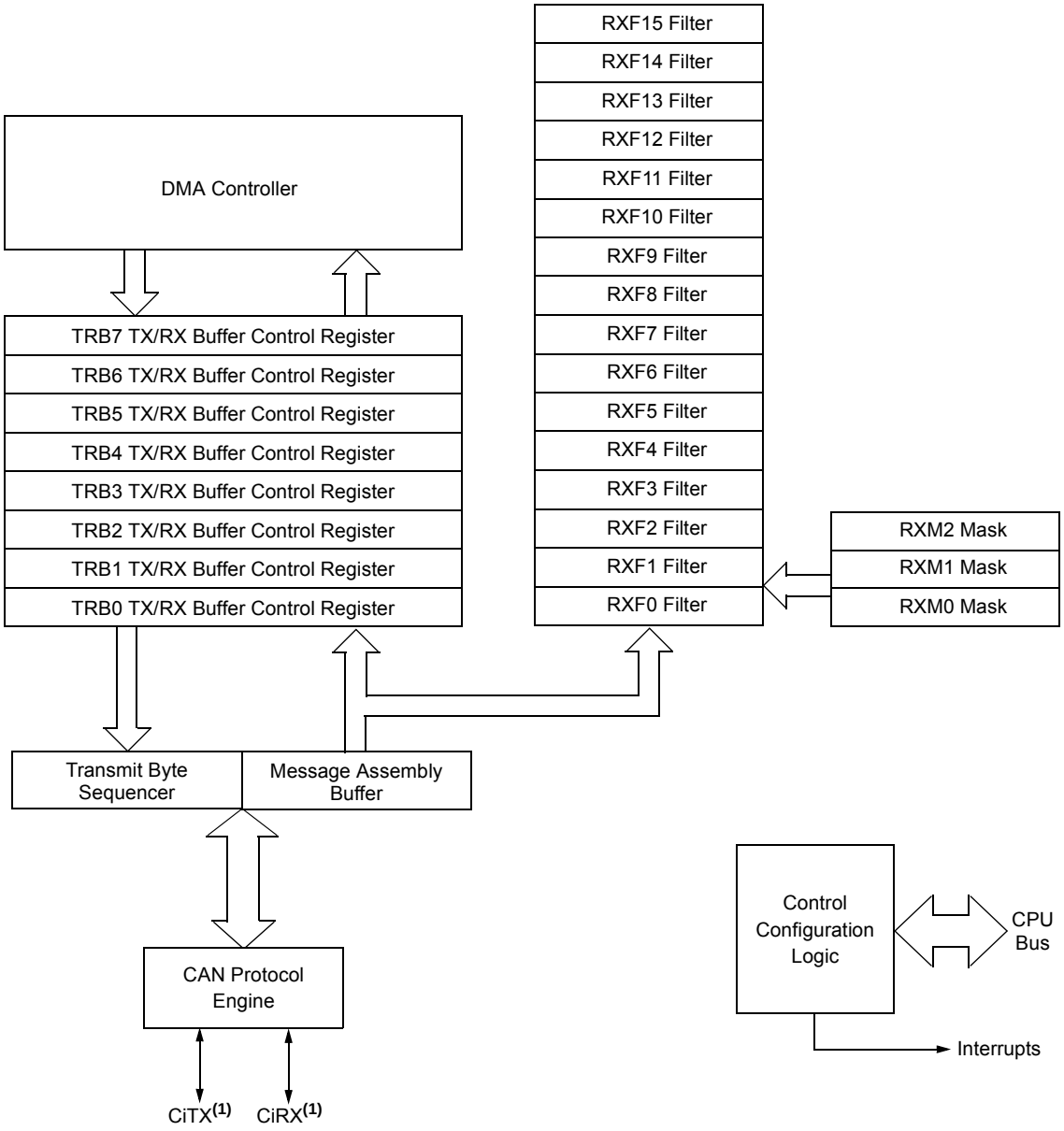

Note 1: i = 1 or 2 refers to a particular ECAN™ module (ECAN1 or ECAN2).

© 2009-2012 Microchip Technology Inc.

19.3 Modes of Operation

The CAN module can operate in one of several operation modes selected by the user. These modes include:

- Initialization Mode
- Disable Mode
- Normal Operation Mode
- Listen Only Mode
- Listen All Messages Mode
- Loopback Mode

Modes are requested by setting the REQOP<2:0> bits (CiCTRL1<10:8>). Entry into a mode is Acknowledged by monitoring the OPMODE<2:0> bits (CiCTRL1<7:5>). The module will not change the mode and the OPMODE bits until a change in mode is acceptable, generally during bus Idle time, which is defined as at least 11 consecutive recessive bits.

19.3.1 INITIALIZATION MODE

In the Initialization mode, the module will not transmit or receive. The error counters are cleared and the interrupt flags remain unchanged. The programmer will have access to Configuration registers that are access restricted in other modes. The module will protect the user from accidentally violating the CAN protocol through programming errors. All registers which control the configuration of the module cannot be modified while the module is on-line. The CAN module will not be allowed to enter the Configuration mode while a transmission is taking place. The Configuration mode serves as a lock to protect the following registers:

- All Module Control Registers
- Baud Rate and Interrupt Configuration Registers
- Bus Timing Registers
- Identifier Acceptance Filter Registers
- Identifier Acceptance Mask Registers

19.3.2 DISABLE MODE

In Disable mode, the module will not transmit or receive. The module has the ability to set the WAKIF bit due to bus activity, however, any pending interrupts will remain and the error counters will retain their value.

If the REQOP<2:0> bits (CiCTRL1<10:8>) = `001`, the module will enter the Module Disable mode. If the module is active, the module will wait for 11 recessive bits on the CAN bus, detect that condition as an Idle bus, then accept the module disable command. When the OPMODE<2:0> bits (CiCTRL1<7:5>) = `001`, that indicates whether the module successfully went into Module Disable mode. The I/O pins will revert to normal I/O function when the module is in the Module Disable mode.

The module can be programmed to apply a low-pass filter function to the CiRX input line while the module or the CPU is in Sleep mode. The WAKFIL bit (CiCFG2<14>) enables or disables the filter.

Note:	Typically, if the CAN module is allowed to transmit in a particular mode of operation and a transmission is requested immediately after the CAN module has been placed in that mode of operation, the module waits for 11 consecutive recessive bits on the bus before starting transmission. If the user switches to Disable mode within this 11-bit period, then this transmission is aborted and the corresponding TXABT bit is set and TXREQ bit is cleared.

19.3.3 NORMAL OPERATION MODE

Normal Operation mode is selected when REQOP<2:0> = `000`. In this mode, the module is activated and the I/O pins will assume the CAN bus functions. The module will transmit and receive CAN bus messages via the CiTX and CiRX pins.

19.3.4 LISTEN ONLY MODE

If the Listen Only mode is activated, the module on the CAN bus is passive. The transmitter buffers revert to the port I/O function. The receive pins remain inputs. For the receiver, no error flags or Acknowledge signals are sent. The error counters are deactivated in this state. The Listen Only mode can be used for detecting the baud rate on the CAN bus. To use this, it is necessary that there are at least two further nodes that communicate with each other.

19.3.5 LISTEN ALL MESSAGES MODE

The module can be set to ignore all errors and receive any message. The Listen All Messages mode is activated by setting REQOP<2:0> = ‘`111`’. In this mode, the data which is in the message assembly buffer, until the time an error occurred, is copied in the receive buffer and can be read via the CPU interface.

19.3.6 LOOPBACK MODE

If the Loopback mode is activated, the module will connect the internal transmit signal to the internal receive signal at the module boundary. The transmit and receive pins revert to their port I/O function.

REGISTER 19-1: CiCTRL1: ECAN™ CONTROL REGISTER 1

U-0	U-0	R/W-0	R/W-0	r-0	R/W-1	R/W-0	R/W-0
—	—	CSIDL	ABAT	—	REQOP<2:0>		
bit 15							bit 8

R-1	R-0	R-0	U-0	R/W-0	U-0	U-0	R/W-0
OPMODE<2:0>			—	CANCAP	—	—	WIN
bit 7							bit 0

Legend:			
R = Readable bit	W = Writable bit	U = Unimplemented bit, read as ‘0’	
-n = Value at POR	‘1’ = Bit is set	‘0’ = Bit is cleared	r = Bit is Reserved

bit 15-14 **Unimplemented:** Read as ‘0’

bit 13 **CSIDL:** Stop in Idle Mode bit
1 = Discontinue module operation when device enters Idle mode
0 = Continue module operation in Idle mode

bit 12 **ABAT:** Abort All Pending Transmissions bit
1 = Signal all transmit buffers to abort transmission
0 = Module will clear this bit when all transmissions are aborted

bit 11 **Reserved:** Do not use

bit 10-8 **REQOP<2:0>:** Request Operation Mode bits
111 = Set Listen All Messages mode
110 = Reserved - do not use
101 = Reserved - do not use
100 = Set Configuration mode
011 = Set Listen Only Mode
010 = Set Loopback mode
001 = Set Disable mode
000 = Set Normal Operation mode

bit 7-5 **OPMODE<2:0>:** Operation Mode bits
111 = Module is in Listen All Messages mode
110 = Reserved
101 = Reserved
100 = Module is in Configuration mode
011 = Module is in Listen Only mode
010 = Module is in Loopback mode
001 = Module is in Disable mode
000 = Module is in Normal Operation mode

bit 4 **Unimplemented:** Read as ‘0’

bit 3 **CANCAP:** CAN Message Receive Timer Capture Event Enable bit
1 = Enable input capture based on CAN message receive
0 = Disable CAN capture

bit 2-1 **Unimplemented:** Read as ‘0’

bit 0 **WIN:** SFR Map Window Select bit
1 = Use filter window
0 = Use buffer window

© 2009-2012 Microchip Technology Inc.

REGISTER 19-2: CiCTRL2: ECAN™ CONTROL REGISTER 2

U-0	U-0	U-0	U-0	U-0	U-0	U-0	U-0
—	—	—	—	—	—	—	—
bit 15							bit 8

U-0	U-0	U-0	R-0	R-0	R-0	R-0	R-0
—	—	—	DNCNT<4:0>				
bit 7							bit 0

Legend:			
R = Readable bit	W = Writable bit	U = Unimplemented bit, read as ‘0’	
-n = Value at POR	‘1’ = Bit is set	‘0’ = Bit is cleared	x = Bit is unknown

bit 15-5 **Unimplemented:** Read as ‘0’

bit 4-0 **DNCNT<4:0>:** DeviceNet™ Filter Bit Number bits

11111 = Invalid selection
•
•
•
10010 = Invalid selection
10001 = Compare up to data byte 3, bit 6 with EID<17>
•
•
•
00001 = Compare up to data byte 1, bit 7 with EID<0>
00000 = Do not compare data bytes

REGISTER 19-3: CiVEC: ECAN™ INTERRUPT CODE REGISTER

U-0	U-0	U-0	R-0	R-0	R-0	R-0	R-0
—	—	—	FILHIT<4:0>				
bit 15							bit 8

U-0	R-1	R-0	R-0	R-0	R-0	R-0	R-0
—	ICODE<6:0>						
bit 7							bit 0

Legend:			
R = Readable bit	W = Writable bit	U = Unimplemented bit, read as ‘0’	
-n = Value at POR	‘1’ = Bit is set	‘0’ = Bit is cleared	x = Bit is unknown

bit 15-13 **Unimplemented:** Read as ‘0’

bit 12-8 **FILHIT<4:0>:** Filter Hit Number bits

10000-11111 = Reserved
01111 = Filter 15
•
•
•
00001 = Filter 1
00000 = Filter 0

bit 7 **Unimplemented:** Read as ‘0’

bit 6-0 **ICODE<6:0>:** Interrupt Flag Code bits

1000101-1111111 = Reserved
1000100 = FIFO almost full interrupt
1000011 = Receiver overflow interrupt
1000010 = Wake-up interrupt
1000001 = Error interrupt
1000000 = No interrupt
0010000-0111111 = Reserved
0001111 = RB15 buffer Interrupt
•
•
•
0001001 = RB9 buffer interrupt
0001000 = RB8 buffer interrupt
0000111 = TRB7 buffer interrupt
0000110 = TRB6 buffer interrupt
0000101 = TRB5 buffer interrupt
0000100 = TRB4 buffer interrupt
0000011 = TRB3 buffer interrupt
0000010 = TRB2 buffer interrupt
0000001 = TRB1 buffer interrupt
0000000 = TRB0 Buffer interrupt

© 2009-2012 Microchip Technology Inc.

REGISTER 19-4: CiFCTRL: ECAN™ FIFO CONTROL REGISTER

R/W-0	R/W-0	R/W-0	U-0	U-0	U-0	U-0	U-0
DMABS<2:0>			—	—	—	—	—
bit 15							bit 8

U-0	U-0	U-0	R/W-0	R/W-0	R/W-0	R/W-0	R/W-0
—	—	—	FSA<4:0>				
bit 7							bit 0

Legend:			
R = Readable bit	W = Writable bit	U = Unimplemented bit, read as ‘0’	
-n = Value at POR	‘1’ = Bit is set	‘0’ = Bit is cleared	x = Bit is unknown

bit 15-13 **DMABS<2:0>:** DMA Buffer Size bits
111 = Reserved; do not use
110 = 32 buffers in DMA RAM
101 = 24 buffers in DMA RAM
100 = 16 buffers in DMA RAM
011 = 12 buffers in DMA RAM
010 = 8 buffers in DMA RAM
001 = 6 buffers in DMA RAM
000 = 4 buffers in DMA RAM

bit 12-5 **Unimplemented:** Read as ‘0’

bit 4-0 **FSA<4:0>:** FIFO Area Starts with Buffer bits
11111 = RB31 buffer
11110 = RB30 buffer
•
•
•
00001 = TRB1 buffer
00000 = TRB0 buffer

REGISTER 19-5: CiFIFO: ECAN™ FIFO STATUS REGISTER

U-0	U-0	R-0	R-0	R-0	R-0	R-0	R-0
—	—	FBP<5:0>					
bit 15							bit 8

U-0	U-0	R-0	R-0	R-0	R-0	R-0	R-0
—	—	FNRB<5:0>					
bit 7							bit 0

Legend:			
R = Readable bit	W = Writable bit	U = Unimplemented bit, read as ‘0’	
-n = Value at POR	‘1’ = Bit is set	‘0’ = Bit is cleared	x = Bit is unknown

bit 15-14 **Unimplemented:** Read as ‘0’

bit 13-8 **FBP<5:0>:** FIFO Write Buffer Pointer bits
011111 = RB31 buffer
011110 = RB30 buffer
•
•
•
000001 = TRB1 buffer
000000 = TRB0 buffer

bit 7-6 **Unimplemented:** Read as ‘0’

bit 5-0 **FNRB<5:0>:** FIFO Next Read Buffer Pointer bits
011111 = RB31 buffer
011110 = RB30 buffer
•
•
•
000001 = TRB1 buffer
000000 = TRB0 buffer

© 2009-2012 Microchip Technology Inc.

REGISTER 19-6: CiINTF: ECAN™ INTERRUPT FLAG REGISTER

U-0	U-0	R-0	R-0	R-0	R-0	R-0	R-0
—	—	TXBO	TXBP	RXBP	TXWAR	RXWAR	EWARN
bit 15							bit 8

R/C-0	R/C-0	R/C-0	U-0	R/C-0	R/C-0	R/C-0	R/C-0
IVRIF	WAKIF	ERRIF	—	FIFOIF	RBOVIF	RBIF	TBIF
bit 7							bit 0

Legend:	C = Clear only bit		
R = Readable bit	W = Writable bit	U = Unimplemented bit, read as ‘0’	
-n = Value at POR	‘1’ = Bit is set	‘0’ = Bit is cleared	x = Bit is unknown

bit 15-14 **Unimplemented:** Read as ‘0’

bit 13 **TXBO:** Transmitter in Error State Bus Off bit
1 = Transmitter is in Bus Off state
0 = Transmitter is not in Bus Off state

bit 12 **TXBP:** Transmitter in Error State Bus Passive bit
1 = Transmitter is in Bus Passive state
0 = Transmitter is not in Bus Passive state

bit 11 **RXBP:** Receiver in Error State Bus Passive bit
1 = Receiver is in Bus Passive state
0 = Receiver is not in Bus Passive state

bit 10 **TXWAR:** Transmitter in Error State Warning bit
1 = Transmitter is in Error Warning state
0 = Transmitter is not in Error Warning state

bit 9 **RXWAR:** Receiver in Error State Warning bit
1 = Receiver is in Error Warning state
0 = Receiver is not in Error Warning state

bit 8 **EWARN:** Transmitter or Receiver in Error State Warning bit
1 = Transmitter or receiver is in Error Warning state
0 = Transmitter or receiver is not in Error Warning state

bit 7 **IVRIF:** Invalid Message Received Interrupt Flag bit
1 = Interrupt request has occurred
0 = Interrupt request has not occurred

bit 6 **WAKIF:** Bus Wake-up Activity Interrupt Flag bit
1 = Interrupt request has occurred
0 = Interrupt request has not occurred

bit 5 **ERRIF:** Error Interrupt Flag bit (multiple sources in CiINTF<13:8> register)
1 = Interrupt request has occurred
0 = Interrupt request has not occurred

bit 4 **Unimplemented:** Read as ‘0’

bit 3 **FIFOIF:** FIFO Almost Full Interrupt Flag bit
1 = Interrupt request has occurred
0 = Interrupt request has not occurred

bit 2 **RBOVIF:** RX Buffer Overflow Interrupt Flag bit
1 = Interrupt request has occurred
0 = Interrupt request has not occurred

bit 1 **RBIF:** RX Buffer Interrupt Flag bit
1 = Interrupt request has occurred
0 = Interrupt request has not occurred

bit 0 **TBIF:** TX Buffer Interrupt Flag bit
1 = Interrupt request has occurred
0 = Interrupt request has not occurred

REGISTER 19-7: CiINTE: ECAN™ INTERRUPT ENABLE REGISTER

U-0	U-0	U-0	U-0	U-0	U-0	U-0	U-0
—	—	—	—	—	—	—	—
bit 15							bit 8

R/W-0	R/W-0	R/W-0	U-0	R/W-0	R/W-0	R/W-0	R/W-0
IVRIE	WAKIE	ERRIE	—	FIFOIE	RBOVIE	RBIE	TBIE
bit 7							bit 0

Legend:			
R = Readable bit	W = Writable bit	U = Unimplemented bit, read as ‘0’	
-n = Value at POR	‘1’ = Bit is set	‘0’ = Bit is cleared	x = Bit is unknown

bit 15-8 **Unimplemented:** Read as ‘0’

bit 7 **IVRIE:** Invalid Message Interrupt Enable bit
1 = Interrupt request enabled
0 = Interrupt request not enabled

bit 6 **WAKIE:** Bus Wake-up Activity Interrupt Enable bit
1 = Interrupt request enabled
0 = Interrupt request not enabled

bit 5 **ERRIE:** Error Interrupt Enable bit
1 = Interrupt request enabled
0 = Interrupt request not enabled

bit 4 **Unimplemented:** Read as ‘0’

bit 3 **FIFOIE:** FIFO Almost Full Interrupt Enable bit
1 = Interrupt request enabled
0 = Interrupt request not enabled

bit 2 **RBOVIE:** RX Buffer Overflow Interrupt Enable bit
1 = Interrupt request enabled
0 = Interrupt request not enabled

bit 1 **RBIE:** RX Buffer Interrupt Enable bit
1 = Interrupt request enabled
0 = Interrupt request not enabled

bit 0 **TBIE:** TX Buffer Interrupt Enable bit
1 = Interrupt request enabled
0 = Interrupt request not enabled

© 2009-2012 Microchip Technology Inc.

REGISTER 19-8: CiEC: ECAN™ TRANSMIT/RECEIVE ERROR COUNT REGISTER

R-0	R-0	R-0	R-0	R-0	R-0	R-0	R-0
TERRCNT<7:0>							
bit 15							bit 8

R-0	R-0	R-0	R-0	R-0	R-0	R-0	R-0
RERRCNT<7:0>							
bit 7							bit 0

Legend:			
R = Readable bit	W = Writable bit	U = Unimplemented bit, read as ‘0’	
-n = Value at POR	‘1’ = Bit is set	‘0’ = Bit is cleared	x = Bit is unknown

bit 15-8 **TERRCNT<7:0>:** Transmit Error Count bits

bit 7-0 **RERRCNT<7:0>:** Receive Error Count bits

REGISTER 19-9: CiCFG1: ECAN™ BAUD RATE CONFIGURATION REGISTER 1

U-0	U-0	U-0	U-0	U-0	U-0	U-0	U-0
—	—	—	—	—	—	—	—
bit 15							bit 8

R/W-0	R/W-0	R/W-0	R/W-0	R/W-0	R/W-0	R/W-0	R/W-0
SJW<1:0>		BRP<5:0>					
bit 7							bit 0

Legend:			
R = Readable bit	W = Writable bit	U = Unimplemented bit, read as ‘0’	
-n = Value at POR	‘1’ = Bit is set	‘0’ = Bit is cleared	x = Bit is unknown

bit 15-8 **Unimplemented:** Read as ‘0’

bit 7-6 **SJW<1:0>:** Synchronization Jump Width bits

11 = Length is 4 x T_Q
10 = Length is 3 x T_Q
01 = Length is 2 x T_Q
00 = Length is 1 x T_Q

bit 5-0 **BRP<5:0>:** Baud Rate Prescaler bits

11 1111 = $T_Q = 2 \times 64 \times 1/F_{CAN}$
•
•
•
00 0010 = $T_Q = 2 \times 3 \times 1/F_{CAN}$
00 0001 = $T_Q = 2 \times 2 \times 1/F_{CAN}$
00 0000 = $T_Q = 2 \times 1 \times 1/F_{CAN}$

© 2009-2012 Microchip Technology Inc.

REGISTER 19-10: CiCFG2: ECAN™ BAUD RATE CONFIGURATION REGISTER 2

U-0	R/W-x	U-0	U-0	U-0	R/W-x	R/W-x	R/W-x
—	WAKFIL	—	—	—	SEG2PH<2:0>		
bit 15							bit 8

R/W-x	R/W-x	R/W-x	R/W-x	R/W-x	R/W-x	R/W-x	R/W-x
SEG2PHTS	SAM	SEG1PH<2:0>			PRSEG<2:0>		
bit 7							bit 0

Legend:			
R = Readable bit	W = Writable bit	U = Unimplemented bit, read as ‘0’	
-n = Value at POR	‘1’ = Bit is set	‘0’ = Bit is cleared	x = Bit is unknown

bit 15 **Unimplemented:** Read as ‘0’

bit 14 **WAKFIL:** Select CAN bus Line Filter for Wake-up bit
1 = Use CAN bus line filter for wake-up
0 = CAN bus line filter is not used for wake-up

bit 13-11 **Unimplemented:** Read as ‘0’

bit 10-8 **SEG2PH<2:0>:** Phase Buffer Segment 2 bits
111 = Length is 8 x TQ
000 = Length is 1 x TQ

bit 7 **SEG2PHTS:** Phase Segment 2 Time Select bit
1 = Freely programmable
0 = Maximum of SEG1PH bits or Information Processing Time (IPT), whichever is greater

bit 6 **SAM:** Sample of the CAN bus Line bit
1 = Bus line is sampled three times at the sample point
0 = Bus line is sampled once at the sample point

bit 5-3 **SEG1PH<2:0>:** Phase Buffer Segment 1 bits
111 = Length is 8 x TQ
000 = Length is 1 x TQ

bit 2-0 **PRSEG<2:0>:** Propagation Time Segment bits
111 = Length is 8 x TQ
000 = Length is 1 x TQ

REGISTER 19-11: CiFEN1: ECAN™ ACCEPTANCE FILTER ENABLE REGISTER

R/W-1	R/W-1	R/W-1	R/W-1	R/W-1	R/W-1	R/W-1	R/W-1
FLTEN15	FLTEN14	FLTEN13	FLTEN12	FLTEN11	FLTEN10	FLTEN9	FLTEN8
bit 15							bit 8

R/W-1	R/W-1	R/W-1	R/W-1	R/W-1	R/W-1	R/W-1	R/W-1
FLTEN7	FLTEN6	FLTEN5	FLTEN4	FLTEN3	FLTEN2	FLTEN1	FLTEN0
bit 7							bit 0

Legend:			
R = Readable bit	W = Writable bit	U = Unimplemented bit, read as ‘0’	
-n = Value at POR	‘1’ = Bit is set	‘0’ = Bit is cleared	x = Bit is unknown

bit 15-0 **FLTENn:** Enable Filter n to Accept Messages bits
`1` = Enable Filter n
`0` = Disable Filter n

© 2009-2012 Microchip Technology Inc.

REGISTER 19-12: CiBUFPNT1: ECAN™ FILTER 0-3 BUFFER POINTER REGISTER

R/W-0	R/W-0	R/W-0	R/W-0	R/W-0	R/W-0	R/W-0	R/W-0
F3BP<3:0>				F2BP<3:0>			
bit 15							bit 8

R/W-0	R/W-0	R/W-0	R/W-0	R/W-0	R/W-0	R/W-0	R/W-0
F1BP<3:0>				F0BP<3:0>			
bit 7							bit 0

Legend:			
R = Readable bit	W = Writable bit	U = Unimplemented bit, read as ‘0’	
-n = Value at POR	‘1’ = Bit is set	‘0’ = Bit is cleared	x = Bit is unknown

bit 15-12 **F3BP<3:0>:** RX Buffer Written when Filter 3 Hits bits
`1111` = Filter hits received in RX FIFO buffer
`1110` = Filter hits received in RX Buffer 14
•
•
•
`0001` = Filter hits received in RX Buffer 1
`0000` = Filter hits received in RX Buffer 0

bit 11-8 **F2BP<3:0>:** RX Buffer Written when Filter 2 Hits bits
`1111` = Filter hits received in RX FIFO buffer
`1110` = Filter hits received in RX Buffer 14
•
•
•
`0001` = Filter hits received in RX Buffer 1
`0000` = Filter hits received in RX Buffer 0

bit 7-4 **F1BP<3:0>:** RX Buffer Written when Filter 1 Hits bits
`1111` = Filter hits received in RX FIFO buffer
`1110` = Filter hits received in RX Buffer 14
•
•
•
`0001` = Filter hits received in RX Buffer 1
`0000` = Filter hits received in RX Buffer 0

bit 3-0 **F0BP<3:0>:** RX Buffer Written when Filter 0 Hits bits
`1111` = Filter hits received in RX FIFO buffer
`1110` = Filter hits received in RX Buffer 14
•
•
•
`0001` = Filter hits received in RX Buffer 1
`0000` = Filter hits received in RX Buffer 0

REGISTER 19-13: CiBUFPNT2: ECAN™ FILTER 4-7 BUFFER POINTER REGISTER

R/W-0	R/W-0	R/W-0	R/W-0	R/W-0	R/W-0	R/W-0	R/W-0
F7BP<3:0>				F6BP<3:0>			
bit 15							bit 8

R/W-0	R/W-0	R/W-0	R/W-0	R/W-0	R/W-0	R/W-0	R/W-0
F5BP<3:0>				F4BP<3:0>			
bit 7							bit 0

Legend:			
R = Readable bit	W = Writable bit	U = Unimplemented bit, read as ‘0’	
-n = Value at POR	‘1’ = Bit is set	‘0’ = Bit is cleared	x = Bit is unknown

bit 15-12 **F7BP<3:0>:** RX Buffer Written when Filter 7 Hits bits
`1111` = Filter hits received in RX FIFO buffer
`1110` = Filter hits received in RX Buffer 14
•
•
•
`0001` = Filter hits received in RX Buffer 1
`0000` = Filter hits received in RX Buffer 0

bit 11-8 **F6BP<3:0>:** RX Buffer Written when Filter 6 Hits bits
`1111` = Filter hits received in RX FIFO buffer
`1110` = Filter hits received in RX Buffer 14
•
•
•
`0001` = Filter hits received in RX Buffer 1
`0000` = Filter hits received in RX Buffer 0

bit 7-4 **F5BP<3:0>:** RX Buffer Written when Filter 5 Hits bits
`1111` = Filter hits received in RX FIFO buffer
`1110` = Filter hits received in RX Buffer 14
•
•
•
`0001` = Filter hits received in RX Buffer 1
`0000` = Filter hits received in RX Buffer 0

bit 3-0 **F4BP<3:0>:** RX Buffer Written when Filter 4 Hits bits
`1111` = Filter hits received in RX FIFO buffer
`1110` = Filter hits received in RX Buffer 14
•
•
•
`0001` = Filter hits received in RX Buffer 1
`0000` = Filter hits received in RX Buffer 0

© 2009-2012 Microchip Technology Inc.

REGISTER 19-14: CiBUFPNT3: ECAN™ FILTER 8-11 BUFFER POINTER REGISTER

R/W-0	R/W-0	R/W-0	R/W-0	R/W-0	R/W-0	R/W-0	R/W-0
F11BP<3:0>				F10BP<3:0>			
bit 15							bit 8

R/W-0	R/W-0	R/W-0	R/W-0	R/W-0	R/W-0	R/W-0	R/W-0
F9BP<3:0>				F8BP<3:0>			
bit 7							bit 0

Legend:			
R = Readable bit	W = Writable bit	U = Unimplemented bit, read as ‘0’	
-n = Value at POR	‘1’ = Bit is set	‘0’ = Bit is cleared	x = Bit is unknown

bit 15-12 **F11BP<3:0>:** RX Buffer Written when Filter 11 Hits bits
`1111` = Filter hits received in RX FIFO buffer
`1110` = Filter hits received in RX Buffer 14
•
•
•
`0001` = Filter hits received in RX Buffer 1
`0000` = Filter hits received in RX Buffer 0

bit 11-8 **F10BP<3:0>:** RX Buffer Written when Filter 10 Hits bits
`1111` = Filter hits received in RX FIFO buffer
`1110` = Filter hits received in RX Buffer 14
•
•
•
`0001` = Filter hits received in RX Buffer 1
`0000` = Filter hits received in RX Buffer 0

bit 7-4 **F9BP<3:0>:** RX Buffer Written when Filter 9 Hits bits
`1111` = Filter hits received in RX FIFO buffer
`1110` = Filter hits received in RX Buffer 14
•
•
•
`0001` = Filter hits received in RX Buffer 1
`0000` = Filter hits received in RX Buffer 0

bit 3-0 **F8BP<3:0>:** RX Buffer Written when Filter 8 Hits bits
`1111` = Filter hits received in RX FIFO buffer
`1110` = Filter hits received in RX Buffer 14
•
•
•
`0001` = Filter hits received in RX Buffer 1
`0000` = Filter hits received in RX Buffer 0

REGISTER 19-15: CiBUFPNT4: ECAN™ FILTER 12-15 BUFFER POINTER REGISTER

R/W-0	R/W-0	R/W-0	R/W-0	R/W-0	R/W-0	R/W-0	R/W-0
F15BP<3:0>				F14BP<3:0>			
bit 15							bit 8

R/W-0	R/W-0	R/W-0	R/W-0	R/W-0	R/W-0	R/W-0	R/W-0
F13BP<3:0>				F12BP<3:0>			
bit 7							bit 0

Legend:			
R = Readable bit	W = Writable bit	U = Unimplemented bit, read as ‘0’	
-n = Value at POR	‘1’ = Bit is set	‘0’ = Bit is cleared	x = Bit is unknown

bit 15-12 **F15BP<3:0>:** RX Buffer Written when Filter 15 Hits bits
`1111` = Filter hits received in RX FIFO buffer
`1110` = Filter hits received in RX Buffer 14
•
•
•
`0001` = Filter hits received in RX Buffer 1
`0000` = Filter hits received in RX Buffer 0

bit 11-8 **F14BP<3:0>:** RX Buffer Written when Filter 14 Hits bits
`1111` = Filter hits received in RX FIFO buffer
`1110` = Filter hits received in RX Buffer 14
•
•
•
`0001` = Filter hits received in RX Buffer 1
`0000` = Filter hits received in RX Buffer 0

bit 7-4 **F13BP<3:0>:** RX Buffer Written when Filter 13 Hits bits
`1111` = Filter hits received in RX FIFO buffer
`1110` = Filter hits received in RX Buffer 14
•
•
•
`0001` = Filter hits received in RX Buffer 1
`0000` = Filter hits received in RX Buffer 0

bit 3-0 **F12BP<3:0>:** RX Buffer Written when Filter 12 Hits bits
`1111` = Filter hits received in RX FIFO buffer
`1110` = Filter hits received in RX Buffer 14
•
•
•
`0001` = Filter hits received in RX Buffer 1
`0000` = Filter hits received in RX Buffer 0

© 2009-2012 Microchip Technology Inc.

REGISTER 19-16: CiRXFnSID: ECAN™ ACCEPTANCE FILTER n STANDARD IDENTIFIER (n = 0, 1, ..., 15)

R/W-x	R/W-x	R/W-x	R/W-x	R/W-x	R/W-x	R/W-x	R/W-x
SID<10:3>							
bit 15							bit 8

R/W-x	R/W-x	R/W-x	U-0	R/W-x	U-0	R/W-x	R/W-x
SID<2:0>			—	EXIDE	—	EID<17:16>	
bit 7							bit 0

Legend:			
R = Readable bit	W = Writable bit	U = Unimplemented bit, read as ‘0’	
-n = Value at POR	‘1’ = Bit is set	‘0’ = Bit is cleared	x = Bit is unknown

bit 15-5 **SID<10:0>:** Standard Identifier bits
1 = Message address bit SIDx must be ‘1’ to match filter
0 = Message address bit SIDx must be ‘0’ to match filter

bit 4 **Unimplemented:** Read as ‘0’

bit 3 **EXIDE:** Extended Identifier Enable bit
If MIDE = 1 then:
1 = Match only messages with extended identifier addresses
0 = Match only messages with standard identifier addresses
If MIDE = 0 then:
Ignore EXIDE bit.

bit 2 **Unimplemented:** Read as ‘0’

bit 1-0 **EID<17:16>:** Extended Identifier bits
1 = Message address bit EIDx must be ‘1’ to match filter
0 = Message address bit EIDx must be ‘0’ to match filter

REGISTER 19-17: CiRXFnEID: ECAN™ ACCEPTANCE FILTER n EXTENDED IDENTIFIER (n = 0, 1, ..., 15)

R/W-x	R/W-x	R/W-x	R/W-x	R/W-x	R/W-x	R/W-x	R/W-x
EID<15:8>							
bit 15							bit 8

R/W-x	R/W-x	R/W-x	R/W-x	R/W-x	R/W-x	R/W-x	R/W-x
EID<7:0>							
bit 7							bit 0

Legend:			
R = Readable bit	W = Writable bit	U = Unimplemented bit, read as ‘0’	
-n = Value at POR	‘1’ = Bit is set	‘0’ = Bit is cleared	x = Bit is unknown

bit 15-0 **EID<15:0>:** Extended Identifier bits
1 = Message address bit EIDx must be ‘1’ to match filter
0 = Message address bit EIDx must be ‘0’ to match filter

REGISTER 19-18: CiFMSKSEL1: ECAN™ FILTER 7-0 MASK SELECTION REGISTER

R/W-0	R/W-0	R/W-0	R/W-0	R/W-0	R/W-0	R/W-0	R/W-0
F7MSK<1:0>		F6MSK<1:0>		F5MSK<1:0>		F4MSK<1:0>	
bit 15							bit 8

R/W-0	R/W-0	R/W-0	R/W-0	R/W-0	R/W-0	R/W-0	R/W-0
F3MSK<1:0>		F2MSK<1:0>		F1MSK<1:0>		F0MSK<1:0>	
bit 7							bit 0

Legend:			
R = Readable bit	W = Writable bit	U = Unimplemented bit, read as ‘0’	
-n = Value at POR	‘1’ = Bit is set	‘0’ = Bit is cleared	x = Bit is unknown

bit 15-14 **F7MSK<1:0>:** Mask Source for Filter 7 bit
`11` = Reserved; do not use
`10` = Acceptance Mask 2 registers contain mask
`01` = Acceptance Mask 1 registers contain mask
`00` = Acceptance Mask 0 registers contain mask

bit 13-12 **F6MSK<1:0>:** Mask Source for Filter 6 bit
`11` = Reserved; do not use
`10` = Acceptance Mask 2 registers contain mask
`01` = Acceptance Mask 1 registers contain mask
`00` = Acceptance Mask 0 registers contain mask

bit 11-10 **F5MSK<1:0>:** Mask Source for Filter 5 bit
`11` = Reserved; do not use
`10` = Acceptance Mask 2 registers contain mask
`01` = Acceptance Mask 1 registers contain mask
`00` = Acceptance Mask 0 registers contain mask

bit 9-8 **F4MSK<1:0>:** Mask Source for Filter 4 bit
`11` = Reserved; do not use
`10` = Acceptance Mask 2 registers contain mask
`01` = Acceptance Mask 1 registers contain mask
`00` = Acceptance Mask 0 registers contain mask

bit 7-6 **F3MSK<1:0>:** Mask Source for Filter 3 bit
`11` = Reserved; do not use
`10` = Acceptance Mask 2 registers contain mask
`01` = Acceptance Mask 1 registers contain mask
`00` = Acceptance Mask 0 registers contain mask

bit 5-4 **F2MSK<1:0>:** Mask Source for Filter 2 bit
`11` = Reserved; do not use
`10` = Acceptance Mask 2 registers contain mask
`01` = Acceptance Mask 1 registers contain mask
`00` = Acceptance Mask 0 registers contain mask

bit 3-2 **F1MSK<1:0>:** Mask Source for Filter 1 bit
`11` = Reserved; do not use
`10` = Acceptance Mask 2 registers contain mask
`01` = Acceptance Mask 1 registers contain mask
`00` = Acceptance Mask 0 registers contain mask

bit 1-0 **F0MSK<1:0>:** Mask Source for Filter 0 bit
`11` = Reserved; do not use
`10` = Acceptance Mask 2 registers contain mask
`01` = Acceptance Mask 1 registers contain mask
`00` = Acceptance Mask 0 registers contain mask

© 2009-2012 Microchip Technology Inc.

REGISTER 19-19: CiFMSKSEL2: ECAN™ FILTER 15-8 MASK SELECTION REGISTER

R/W-0	R/W-0	R/W-0	R/W-0	R/W-0	R/W-0	R/W-0	R/W-0
F15MSK<1:0>		F14MSK<1:0>		F13MSK<1:0>		F12MSK<1:0>	
bit 15							bit 8

R/W-0	R/W-0	R/W-0	R/W-0	R/W-0	R/W-0	R/W-0	R/W-0
F11MSK<1:0>		F10MSK<1:0>		F9MSK<1:0>		F8MSK<1:0>	
bit 7							bit 0

Legend:			
R = Readable bit	W = Writable bit	U = Unimplemented bit, read as ‘0’	
-n = Value at POR	‘1’ = Bit is set	‘0’ = Bit is cleared	x = Bit is unknown

bit 15-14 **F15MSK<1:0>:** Mask Source for Filter 15 bit
11 = Reserved; do not use
10 = Acceptance Mask 2 registers contain mask
01 = Acceptance Mask 1 registers contain mask
00 = Acceptance Mask 0 registers contain mask

bit 13-12 **F14MSK<1:0>:** Mask Source for Filter 14 bit
11 = Reserved; do not use
10 = Acceptance Mask 2 registers contain mask
01 = Acceptance Mask 1 registers contain mask
00 = Acceptance Mask 0 registers contain mask

bit 11-10 **F13MSK<1:0>:** Mask Source for Filter 13 bit
11 = Reserved; do not use
10 = Acceptance Mask 2 registers contain mask
01 = Acceptance Mask 1 registers contain mask
00 = Acceptance Mask 0 registers contain mask

bit 9-8 **F12MSK<1:0>:** Mask Source for Filter 12 bit
11 = Reserved; do not use
10 = Acceptance Mask 2 registers contain mask
01 = Acceptance Mask 1 registers contain mask
00 = Acceptance Mask 0 registers contain mask

bit 7-6 **F11MSK<1:0>:** Mask Source for Filter 11 bit
11 = Reserved; do not use
10 = Acceptance Mask 2 registers contain mask
01 = Acceptance Mask 1 registers contain mask
00 = Acceptance Mask 0 registers contain mask

bit 5-4 **F10MSK<1:0>:** Mask Source for Filter 10 bit
11 = Reserved; do not use
10 = Acceptance Mask 2 registers contain mask
01 = Acceptance Mask 1 registers contain mask
00 = Acceptance Mask 0 registers contain mask

bit 3-2 **F9MSK<1:0>:** Mask Source for Filter 9 bit
11 = Reserved; do not use
10 = Acceptance Mask 2 registers contain mask
01 = Acceptance Mask 1 registers contain mask
00 = Acceptance Mask 0 registers contain mask

bit 1-0 **F8MSK<1:0>:** Mask Source for Filter 8 bit
11 = Reserved; do not use
10 = Acceptance Mask 2 registers contain mask
01 = Acceptance Mask 1 registers contain mask
00 = Acceptance Mask 0 registers contain mask

REGISTER 19-20: CiRXMnSID: ECAN™ ACCEPTANCE FILTER MASK n STANDARD IDENTIFIER

R/W-x	R/W-x	R/W-x	R/W-x	R/W-x	R/W-x	R/W-x	R/W-x
SID<10:3>							
bit 15							bit 8

R/W-x	R/W-x	R/W-x	U-0	R/W-x	U-0	R/W-x	R/W-x
SID<2:0>			—	MIDE	—	EID<17:16>	
bit 7							bit 0

Legend:			
R = Readable bit	W = Writable bit	U = Unimplemented bit, read as ‘0’	
-n = Value at POR	‘1’ = Bit is set	‘0’ = Bit is cleared	x = Bit is unknown

bit 15-5 **SID<10:0>:** Standard Identifier bits
`1` = Include bit SIDx in filter comparison
`0` = Bit SIDx is don’t care in filter comparison

bit 4 **Unimplemented:** Read as ‘`0`’

bit 3 **MIDE:** Identifier Receive Mode bit
`1` = Match only message types (standard or extended address) that correspond to EXIDE bit in filter
`0` = Match either standard or extended address message if filters match
(i.e., if (Filter SID) = (Message SID) or if (Filter SID/EID) = (Message SID/EID))

bit 2 **Unimplemented:** Read as ‘`0`’

bit 1-0 **EID<17:16>:** Extended Identifier bits
`1` = Include bit EIDx in filter comparison
`0` = Bit EIDx is don’t care in filter comparison

REGISTER 19-21: CiRXMnEID: ECAN™ ACCEPTANCE FILTER MASK n EXTENDED IDENTIFIER

R/W-x	R/W-x	R/W-x	R/W-x	R/W-x	R/W-x	R/W-x	R/W-x
EID<15:8>							
bit 15							bit 8

R/W-x	R/W-x	R/W-x	R/W-x	R/W-x	R/W-x	R/W-x	R/W-x
EID<7:0>							
bit 7							bit 0

Legend:			
R = Readable bit	W = Writable bit	U = Unimplemented bit, read as ‘0’	
-n = Value at POR	‘1’ = Bit is set	‘0’ = Bit is cleared	x = Bit is unknown

bit 15-0 **EID<15:0>:** Extended Identifier bits
`1` = Include bit EIDx in filter comparison
`0` = Bit EIDx is don’t care in filter comparison

© 2009-2012 Microchip Technology Inc.

REGISTER 19-22: CiRXFUL1: ECAN™ RECEIVE BUFFER FULL REGISTER 1

R/C-0	R/C-0	R/C-0	R/C-0	R/C-0	R/C-0	R/C-0	R/C-0
RXFUL15	RXFUL14	RXFUL13	RXFUL12	RXFUL11	RXFUL10	RXFUL9	RXFUL8
bit 15							bit 8

R/C-0	R/C-0	R/C-0	R/C-0	R/C-0	R/C-0	R/C-0	R/C-0
RXFUL7	RXFUL6	RXFUL5	RXFUL4	RXFUL3	RXFUL2	RXFUL1	RXFUL0
bit 7							bit 0

Legend:	C = Clear only bit		
R = Readable bit	W = Writable bit	U = Unimplemented bit, read as ‘0’	
-n = Value at POR	‘1’ = Bit is set	‘0’ = Bit is cleared	x = Bit is unknown

bit 15-0 **RXFUL15:RXFUL0:** Receive Buffer n Full bits
`1` = Buffer is full (set by module)
`0` = Buffer is empty (clear by application software)

REGISTER 19-23: CiRXFUL2: ECAN™ RECEIVE BUFFER FULL REGISTER 2

R/C-0	R/C-0	R/C-0	R/C-0	R/C-0	R/C-0	R/C-0	R/C-0
RXFUL31	RXFUL30	RXFUL29	RXFUL28	RXFUL27	RXFUL26	RXFUL25	RXFUL24
bit 15							bit 8

R/C-0	R/C-0	R/C-0	R/C-0	R/C-0	R/C-0	R/C-0	R/C-0
RXFUL23	RXFUL22	RXFUL21	RXFUL20	RXFUL19	RXFUL18	RXFUL17	RXFUL16
bit 7							bit 0

Legend:	C = Clear only bit		
R = Readable bit	W = Writable bit	U = Unimplemented bit, read as ‘0’	
-n = Value at POR	‘1’ = Bit is set	‘0’ = Bit is cleared	x = Bit is unknown

bit 15-0 **RXFUL31:RXFUL16:** Receive Buffer n Full bits
`1` = Buffer is full (set by module)
`0` = Buffer is empty (clear by application software)

REGISTER 19-24: CiRXOVF1: ECAN™ RECEIVE BUFFER OVERFLOW REGISTER 1

R/C-0	R/C-0	R/C-0	R/C-0	R/C-0	R/C-0	R/C-0	R/C-0
RXOVF15	RXOVF14	RXOVF13	RXOVF12	RXOVF11	RXOVF10	RXOVF9	RXOVF8
bit 15							bit 8

R/C-0	R/C-0	R/C-0	R/C-0	R/C-0	R/C-0	R/C-0	R/C-0
RXOVF7	RXOVF6	RXOVF5	RXOVF4	RXOVF3	RXOVF2	RXOVF1	RXOVF0
bit 7							bit 0

Legend:	C = Clear only bit		
R = Readable bit	W = Writable bit	U = Unimplemented bit, read as ‘0’	
-n = Value at POR	‘1’ = Bit is set	‘0’ = Bit is cleared	x = Bit is unknown

bit 15-0 **RXOVF15:RXOVF0:** Receive Buffer n Overflow bits
`1` = Module pointed a write to a full buffer (set by module)
`0` = Overflow is cleared (clear by application software)

REGISTER 19-25: CiRXOVF2: ECAN™ RECEIVE BUFFER OVERFLOW REGISTER 2

R/C-0	R/C-0	R/C-0	R/C-0	R/C-0	R/C-0	R/C-0	R/C-0
RXOVF31	RXOVF30	RXOVF29	RXOVF28	RXOVF27	RXOVF26	RXOVF25	RXOVF24
bit 15							bit 8

R/C-0	R/C-0	R/C-0	R/C-0	R/C-0	R/C-0	R/C-0	R/C-0
RXOVF23	RXOVF22	RXOVF21	RXOVF20	RXOVF19	RXOVF18	RXOVF17	RXOVF16
bit 7							bit 0

Legend:	C = Clear only bit		
R = Readable bit	W = Writable bit	U = Unimplemented bit, read as ‘0’	
-n = Value at POR	‘1’ = Bit is set	‘0’ = Bit is cleared	x = Bit is unknown

bit 15-0 **RXOVF31:RXOVF16:** Receive Buffer n Overflow bits
`1` = Module pointed a write to a full buffer (set by module)
`0` = Overflow is cleared (clear by application software)

© 2009-2012 Microchip Technology Inc.

REGISTER 19-26: CiTRmnCON: ECAN™ TX/RX BUFFER m CONTROL REGISTER (m = 0,2,4,6; n = 1,3,5,7)

R/W-0	R-0	R-0	R-0	R/W-0	R/W-0	R/W-0	R/W-0
TXENn	TXABTn	TXLARBn	TXERRn	TXREQn	RTRENn	TXnPRI<1:0>	
bit 15							bit 8

R/W-0	R-0	R-0	R-0	R/W-0	R/W-0	R/W-0	R/W-0
TXENm	TXABTm(1)	TXLARBm(1)	TXERRm(1)	TXREQm	RTRENm	TXmPRI<1:0>	
bit 7							bit 0

Legend:			
R = Readable bit	W = Writable bit	U = Unimplemented bit, read as ‘0’	
-n = Value at POR	‘1’ = Bit is set	‘0’ = Bit is cleared	x = Bit is unknown

bit 15-8 **See Definition for Bits 7-0, Controls Buffer n**

bit 7 **TXENm:** TX/RX Buffer Selection bit
1 = Buffer TRBn is a transmit buffer
0 = Buffer TRBn is a receive buffer

bit 6 **TXABTm:** Message Aborted bit(1)
1 = Message was aborted
0 = Message completed transmission successfully

bit 5 **TXLARBm:** Message Lost Arbitration bit(1)
1 = Message lost arbitration while being sent
0 = Message did not lose arbitration while being sent

bit 4 **TXERRm:** Error Detected During Transmission bit(1)
1 = A bus error occurred while the message was being sent
0 = A bus error did not occur while the message was being sent

bit 3 **TXREQm:** Message Send Request bit
Setting this bit to ‘1’ requests sending a message. The bit will automatically clear when the message is successfully sent. Clearing the bit to ‘0’ while set will request a message abort.

bit 2 **RTRENm:** Auto-Remote Transmit Enable bit
1 = When a remote transmit is received, TXREQ will be set
0 = When a remote transmit is received, TXREQ will be unaffected

bit 1-0 **TXmPRI<1:0>:** Message Transmission Priority bits
11 = Highest message priority
10 = High intermediate message priority
01 = Low intermediate message priority
00 = Lowest message priority

Note 1: This bit is cleared when TXREQ is set.

Note: The buffers, SID, EID, DLC, Data Field and Receive Status registers are located in DMA RAM.

REGISTER 19-27: CiTRBnSID: ECAN™ BUFFER n STANDARD IDENTIFIER (n = 0, 1, ..., 31)

U-0	U-0	U-0	R/W-x	R/W-x	R/W-x	R/W-x	R/W-x
—	—	—	SID<10:6>				
bit 15							bit 8

R/W-x	R/W-x	R/W-x	R/W-x	R/W-x	R/W-x	R/W-x	R/W-x
SID<5:0>						SRR	IDE
bit 7							bit 0

Legend:			
R = Readable bit	W = Writable bit	U = Unimplemented bit, read as ‘0’	
-n = Value at POR	‘1’ = Bit is set	‘0’ = Bit is cleared	x = Bit is unknown

bit 15-13 **Unimplemented:** Read as ‘0’

bit 12-2 **SID<10:0>:** Standard Identifier bits

bit 1 **SRR:** Substitute Remote Request bit
1 = Message will request remote transmission
0 = Normal message

bit 0 **IDE:** Extended Identifier bit
1 = Message will transmit extended identifier
0 = Message will transmit standard identifier

REGISTER 19-28: CiTRBnEID: ECAN™ BUFFER n EXTENDED IDENTIFIER (n = 0, 1, ..., 31)

U-0	U-0	U-0	U-0	R/W-x	R/W-x	R/W-x	R/W-x
—	—	—	—	EID<17:14>			
bit 15							bit 8

R/W-x	R/W-x	R/W-x	R/W-x	R/W-x	R/W-x	R/W-x	R/W-x
EID<13:6>							
bit 7							bit 0

Legend:			
R = Readable bit	W = Writable bit	U = Unimplemented bit, read as ‘0’	
-n = Value at POR	‘1’ = Bit is set	‘0’ = Bit is cleared	x = Bit is unknown

bit 15-12 **Unimplemented:** Read as ‘0’

bit 11-0 **EID<17:6>:** Extended Identifier bits

© 2009-2012 Microchip Technology Inc.

REGISTER 19-29: CiTRBnDLC: ECAN™ BUFFER n DATA LENGTH CONTROL (n = 0, 1, ..., 31)

R/W-x	R/W-x	R/W-x	R/W-x	R/W-x	R/W-x	R/W-x	R/W-x
EID<5:0>						RTR	RB1
bit 15							bit 8

U-0	U-0	U-0	R/W-x	R/W-x	R/W-x	R/W-x	R/W-x
—	—	—	RB0	DLC<3:0>			
bit 7							bit 0

Legend:			
R = Readable bit	W = Writable bit	U = Unimplemented bit, read as ‘0’	
-n = Value at POR	‘1’ = Bit is set	‘0’ = Bit is cleared	x = Bit is unknown

bit 15-10 **EID<5:0>:** Extended Identifier bits

bit 9 **RTR:** Remote Transmission Request bit
`1` = Message will request remote transmission
`0` = Normal message

bit 8 **RB1:** Reserved Bit 1
User must set this bit to ‘`0`’ per CAN protocol.

bit 7-5 **Unimplemented:** Read as ‘`0`’

bit 4 **RB0:** Reserved Bit 0
User must set this bit to ‘`0`’ per CAN protocol.

bit 3-0 **DLC<3:0>:** Data Length Code bits

REGISTER 19-30: CiTRBnDm: ECAN™ BUFFER n DATA FIELD BYTE m (n = 0, 1, ..., 31; m = 0, 1, ..., 7)(1)

R/W-x	R/W-x	R/W-x	R/W-x	R/W-x	R/W-x	R/W-x	R/W-x
TRBnDm<7:0>							
bit 7							bit 0

Legend:			
R = Readable bit	W = Writable bit	U = Unimplemented bit, read as ‘0’	
-n = Value at POR	‘1’ = Bit is set	‘0’ = Bit is cleared	x = Bit is unknown

bit 7-0 **TRBnDm<7:0>:** Data Field Buffer ‘n’ Byte ‘m’ bits

Note 1: The Most Significant Byte contains byte (m + 1) of the buffer.

REGISTER 19-31: CiTRBnSTAT: ECAN™ RECEIVE BUFFER n STATUS (n = 0, 1, ..., 31)

U-0	U-0	U-0	R/W-x	R/W-x	R/W-x	R/W-x	R/W-x
—	—	—	FILHIT<4:0>				
bit 15							bit 8

U-0	U-0	U-0	U-0	U-0	U-0	U-0	U-0
—	—	—	—	—	—	—	—
bit 7							bit 0

Legend:			
R = Readable bit	W = Writable bit	U = Unimplemented bit, read as ‘0’	
-n = Value at POR	‘1’ = Bit is set	‘0’ = Bit is cleared	x = Bit is unknown

bit 15-13 **Unimplemented:** Read as ‘0’

bit 12-8 **FILHIT<4:0>:** Filter Hit Code bits (only written by module for receive buffers, unused for transmit buffers)
Encodes number of filter that resulted in writing this buffer.

bit 7-0 **Unimplemented:** Read as ‘0’

© 2009-2012 Microchip Technology Inc.

20.0 DATA CONVERTER INTERFACE (DCI) MODULE

Note 1: This data sheet summarizes the features of the dsPIC33FJXXXGPX06A/X08A/X10A family of devices. However, it is not intended to be a comprehensive reference source. To complement the information in this data sheet, refer to **Section 20. "Data Converter Interface (DCI)"** (DS70288) in the *"dsPIC33F/PIC24H Family Reference Manual"*, which is available from the Microchip web site (www.microchip.com).

2: Some registers and associated bits described in this section may not be available on all devices. Refer to **Section 4.0 "Memory Organization"** in this data sheet for device-specific register and bit information.

20.1 Module Introduction

The dsPIC33FJXXXGPX06A/X08A/X10A Data Converter Interface (DCI) module allows simple interfacing of devices, such as audio coder/decoders (Codecs), ADC and D/A converters. The following interfaces are supported:

- Framed Synchronous Serial Transfer (Single or Multi-Channel)
- Inter-IC Sound (I^2S) Interface
- AC-Link Compliant mode

The DCI module provides the following general features:

- Programmable word size up to 16 bits
- Supports up to 16 time slots, for a maximum frame size of 256 bits
- Data buffering for up to 4 samples without CPU overhead

20.2 Module I/O Pins

There are four I/O pins associated with the module. When enabled, the module controls the data direction of each of the four pins.

20.2.1 CSCK PIN

The CSCK pin provides the serial clock for the DCI module. The CSCK pin may be configured as an input or output using the CSCKD control bit in the DCICON1 SFR. When configured as an output, the serial clock is provided by the dsPIC33FJXXXGPX06A/X08A/X10A. When configured as an input, the serial clock must be provided by an external device.

20.2.2 CSDO PIN

The Serial Data Output (CSDO) pin is configured as an output only pin when the module is enabled. The CSDO pin drives the serial bus whenever data is to be transmitted. The CSDO pin is tri-stated, or driven to '0', during CSCK periods when data is not transmitted depending on the state of the CSDOM control bit. This allows other devices to place data on the serial bus during transmission periods not used by the DCI module.

20.2.3 CSDI PIN

The Serial Data Input (CSDI) pin is configured as an input only pin when the module is enabled.

20.2.3.1 COFS Pin

The Codec Frame Synchronization (COFS) pin is used to synchronize data transfers that occur on the CSDO and CSDI pins. The COFS pin may be configured as an input or an output. The data direction for the COFS pin is determined by the COFSD control bit in the DCICON1 register.

The DCI module accesses the shadow registers while the CPU is in the process of accessing the memory mapped buffer registers.

20.2.4 BUFFER DATA ALIGNMENT

Data values are always stored left justified in the buffers since most Codec data is represented as a signed 2's complement fractional number. If the received word length is less than 16 bits, the unused Least Significant bits in the Receive Buffer registers are set to '0' by the module. If the transmitted word length is less than 16 bits, the unused LSbs in the Transmit Buffer register are ignored by the module. The word length setup is described in subsequent sections of this document.

20.2.5 TRANSMIT/RECEIVE SHIFT REGISTER

The DCI module has a 16-bit shift register for shifting serial data in and out of the module. Data is shifted in/out of the shift register, MSb first, since audio PCM data is transmitted in signed 2's complement format.

20.2.6 DCI BUFFER CONTROL

The DCI module contains a buffer control unit for transferring data between the shadow buffer memory and the Serial Shift register. The buffer control unit is a simple 2-bit address counter that points to word locations in the shadow buffer memory. For the receive memory space (high address portion of DCI buffer memory), the address counter is concatenated with a '0' in the MSb location to form a 3-bit address. For the transmit memory space (high portion of DCI buffer memory), the address counter is concatenated with a '1' in the MSb location.

Note: The DCI buffer control unit always accesses the same relative location in the transmit and receive buffers, so only one address counter is provided.

FIGURE 20-1: DCI MODULE BLOCK DIAGRAM

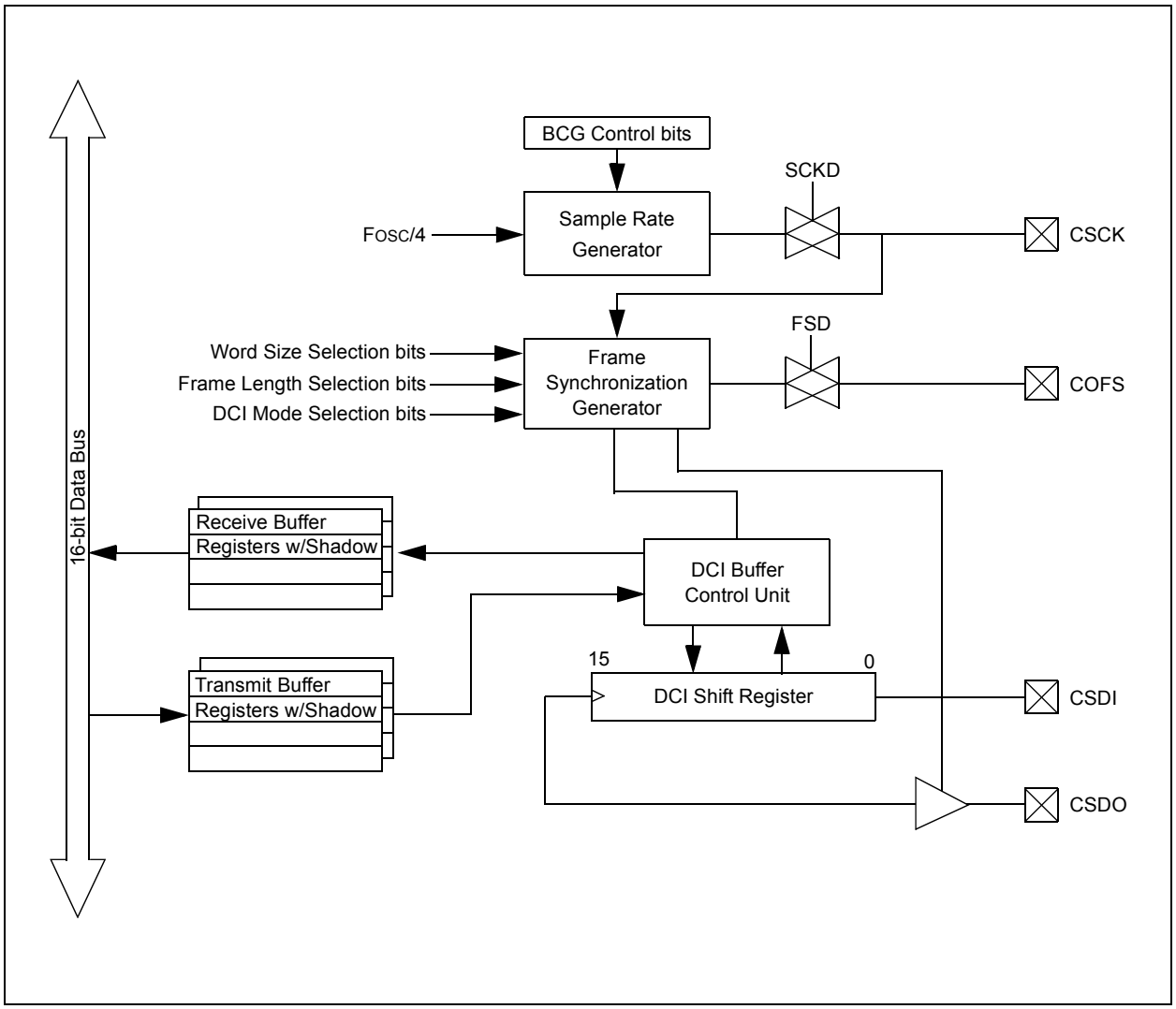

© 2009-2012 Microchip Technology Inc.

REGISTER 20-1: DCICON1: DCI CONTROL REGISTER 1

R/W-0	U-0	R/W-0	U-0	R/W-0	R/W-0	R/W-0	R/W-0
DCIEN	—	DCISIDL	—	DLOOP	CSCKD	CSCKE	COFSD
bit 15							bit 8

R/W-0	R/W-0	R/W-0	U-0	U-0	U-0	R/W-0	R/W-0
UNFM	CSDOM	DJST	—	—	—	COFSM<1:0>	
bit 7							bit 0

Legend:			
R = Readable bit	W = Writable bit	U = Unimplemented bit, read as ‘0’	
-n = Value at POR	‘1’ = Bit is set	‘0’ = Bit is cleared	x = Bit is unknown

bit 15 **DCIEN:** DCI Module Enable bit
1 = Module is enabled
0 = Module is disabled

bit 14 **Unimplemented:** Read as ‘0’

bit 13 **DCISIDL:** DCI Stop in Idle Control bit
1 = Module will halt in CPU Idle mode
0 = Module will continue to operate in CPU Idle mode

bit 12 **Unimplemented:** Read as ‘0’

bit 11 **DLOOP:** Digital Loopback Mode Control bit
1 = Digital Loopback mode is enabled. CSDI and CSDO pins internally connected
0 = Digital Loopback mode is disabled

bit 10 **CSCKD:** Sample Clock Direction Control bit
1 = CSCK pin is an input when DCI module is enabled
0 = CSCK pin is an output when DCI module is enabled

bit 9 **CSCKE:** Sample Clock Edge Control bit
1 = Data changes on serial clock falling edge, sampled on serial clock rising edge
0 = Data changes on serial clock rising edge, sampled on serial clock falling edge

bit 8 **COFSD:** Frame Synchronization Direction Control bit
1 = COFS pin is an input when DCI module is enabled
0 = COFS pin is an output when DCI module is enabled

bit 7 **UNFM:** Underflow Mode bit
1 = Transmit last value written to the transmit registers on a transmit underflow
0 = Transmit ‘0’s on a transmit underflow

bit 6 **CSDOM:** Serial Data Output Mode bit
1 = CSDO pin will be tri-stated during disabled transmit time slots
0 = CSDO pin drives ‘0’s during disabled transmit time slots

bit 5 **DJST:** DCI Data Justification Control bit
1 = Data transmission/reception is begun during the same serial clock cycle as the frame synchronization pulse
0 = Data transmission/reception is begun one serial clock cycle after frame synchronization pulse

bit 4-2 **Unimplemented:** Read as ‘0’

bit 1-0 **COFSM<1:0>:** Frame Sync Mode bits
11 = 20-bit AC-Link mode
10 = 16-bit AC-Link mode
01 = I^2S Frame Sync mode
00 = Multi-Channel Frame Sync mode

REGISTER 20-2: DCICON2: DCI CONTROL REGISTER 2

U-0	U-0	U-0	U-0	R/W-0	R/W-0	U-0	R/W-0
—	—	—	—	BLEN<1:0>		—	COFSG3
bit 15							bit 8

R/W-0	R/W-0	R/W-0	U-0	R/W-0	R/W-0	R/W-0	R/W-0
COFSG<2:0>			—	WS<3:0>			
bit 7							bit 0

Legend:			
R = Readable bit	W = Writable bit	U = Unimplemented bit, read as ‘0’	
-n = Value at POR	‘1’ = Bit is set	‘0’ = Bit is cleared	x = Bit is unknown

bit 15-12 **Unimplemented:** Read as ‘0’

bit 11-10 **BLEN<1:0>:** Buffer Length Control bits
11 = Four data words will be buffered between interrupts
10 = Three data words will be buffered between interrupts
01 = Two data words will be buffered between interrupts
00 = One data word will be buffered between interrupts

bit 9 **Unimplemented:** Read as ‘0’

bit 8-5 **COFSG<3:0>:** Frame Sync Generator Control bits
1111 = Data frame has 16 words
•
•
•
0010 = Data frame has 3 words
0001 = Data frame has 2 words
0000 = Data frame has 1 word

bit 4 **Unimplemented:** Read as ‘0’

bit 3-0 **WS<3:0>:** DCI Data Word Size bits
1111 = Data word size is 16 bits
•
•
•
0100 = Data word size is 5 bits
0011 = Data word size is 4 bits
0010 = **Invalid Selection**. Do not use. Unexpected results may occur
0001 = **Invalid Selection**. Do not use. Unexpected results may occur
0000 = **Invalid Selection**. Do not use. Unexpected results may occur

© 2009-2012 Microchip Technology Inc.

REGISTER 20-3: DCICON3: DCI CONTROL REGISTER 3

U-0	U-0	U-0	U-0	R/W-0	R/W-0	R/W-0	R/W-0
—	—	—	—	BCG<11:8>			
bit 15							bit 8

R/W-0	R/W-0	R/W-0	R/W-0	R/W-0	R/W-0	R/W-0	R/W-0
BCG<7:0>							
bit 7							bit 0

Legend:			
R = Readable bit	W = Writable bit	U = Unimplemented bit, read as ‘0’	
-n = Value at POR	‘1’ = Bit is set	‘0’ = Bit is cleared	x = Bit is unknown

bit 15-12 **Unimplemented:** Read as ‘0’

bit 11-0 **BCG<11:0>:** DCI Bit Clock Generator Control bits

REGISTER 20-4: DCISTAT: DCI STATUS REGISTER

U-0	U-0	U-0	U-0	R-0	R-0	R-0	R-0
—	—	—	—	SLOT<3:0>			
bit 15							bit 8

U-0	U-0	U-0	U-0	R-0	R-0	R-0	R-0
—	—	—	—	ROV	RFUL	TUNF	TMPTY
bit 7							bit 0

Legend:			
R = Readable bit	W = Writable bit	U = Unimplemented bit, read as ‘0’	
-n = Value at POR	‘1’ = Bit is set	‘0’ = Bit is cleared	x = Bit is unknown

bit 15-12 **Unimplemented:** Read as ‘0’

bit 11-8 **SLOT<3:0>:** DCI Slot Status bits
1111 = Slot #15 is currently active
•
•
•
0010 = Slot #2 is currently active
0001 = Slot #1 is currently active
0000 = Slot #0 is currently active

bit 7-4 **Unimplemented:** Read as ‘0’

bit 3 **ROV:** Receive Overflow Status bit
1 = A receive overflow has occurred for at least one receive register
0 = A receive overflow has not occurred

bit 2 **RFUL:** Receive Buffer Full Status bit
1 = New data is available in the receive registers
0 = The receive registers have old data

bit 1 **TUNF:** Transmit Buffer Underflow Status bit
1 = A transmit underflow has occurred for at least one transmit register
0 = A transmit underflow has not occurred

bit 0 **TMPTY:** Transmit Buffer Empty Status bit
1 = The transmit registers are empty
0 = The transmit registers are not empty

© 2009-2012 Microchip Technology Inc.

REGISTER 20-5: RSCON: DCI RECEIVE SLOT CONTROL REGISTER

R/W-0	R/W-0	R/W-0	R/W-0	R/W-0	R/W-0	R/W-0	R/W-0
RSE15	RSE14	RSE13	RSE12	RSE11	RSE10	RSE9	RSE8
bit 15							bit 8

R/W-0	R/W-0	R/W-0	R/W-0	R/W-0	R/W-0	R/W-0	R/W-0
RSE7	RSE6	RSE5	RSE4	RSE3	RSE2	RSE1	RSE0
bit 7							bit 0

Legend:			
R = Readable bit	W = Writable bit	U = Unimplemented bit, read as ‘0’	
-n = Value at POR	‘1’ = Bit is set	‘0’ = Bit is cleared	x = Bit is unknown

bit 15-0 **RSE<15:0>:** Receive Slot Enable bits
`1` = CSDI data is received during the individual time slot n
`0` = CSDI data is ignored during the individual time slot n

REGISTER 20-6: TSCON: DCI TRANSMIT SLOT CONTROL REGISTER

R/W-0	R/W-0	R/W-0	R/W-0	R/W-0	R/W-0	R/W-0	R/W-0
TSE15	TSE14	TSE13	TSE12	TSE11	TSE10	TSE9	TSE8
bit 15							bit 8

R/W-0	R/W-0	R/W-0	R/W-0	R/W-0	R/W-0	R/W-0	R/W-0
TSE7	TSE6	TSE5	TSE4	TSE3	TSE2	TSE1	TSE0
bit 7							bit 0

Legend:			
R = Readable bit	W = Writable bit	U = Unimplemented bit, read as ‘0’	
-n = Value at POR	‘1’ = Bit is set	‘0’ = Bit is cleared	x = Bit is unknown

bit 15-0 **TSE<15:0>:** Transmit Slot Enable Control bits
`1` = Transmit buffer contents are sent during the individual time slot n
`0` = CSDO pin is tri-stated or driven to logic ‘0’, during the individual time slot, depending on the state of the CSDOM bit

NOTES:

© 2009-2012 Microchip Technology Inc.

21.0 10-BIT/12-BIT ANALOG-TO-DIGITAL CONVERTER (ADC)

Note 1: This data sheet summarizes the features of the dsPIC33FJXXXGPX06A/X08A/X10A family of devices. However, it is not intended to be a comprehensive reference source. To complement the information in this data sheet, refer to **Section 16. "Analog-to-Digital Converter (ADC)"** (DS70183) in the *"dsPIC33F/PIC24H Family Reference Manual",* which is available from the Microchip web site (www.microchip.com).

2: Some registers and associated bits described in this section may not be available on all devices. Refer to **Section 4.0 "Memory Organization"** in this data sheet for device-specific register and bit information.

The dsPIC33FJXXXGPX06A/X08A/X10A devices have up to 32 ADC input channels. These devices also have up to 2 ADC modules (ADCx, where 'x' = 1 or 2), each with its own set of Special Function Registers.

The AD12B bit (ADxCON1<10>) allows each of the ADC modules to be configured by the user as either a 10-bit, 4-sample/hold ADC (default configuration) or a 12-bit, 1-sample/hold ADC.

Note: The ADC module needs to be disabled before modifying the AD12B bit.

21.1 Key Features

The 10-bit ADC configuration has the following key features:

- Successive Approximation (SAR) conversion
- Conversion speeds of up to 1.1 Msps
- Up to 32 analog input pins
- External voltage reference input pins
- Simultaneous sampling of up to four analog input pins
- Automatic Channel Scan mode
- Selectable conversion trigger source
- Selectable Buffer Fill modes
- Four result alignment options (signed/unsigned, fractional/integer)
- Operation during CPU Sleep and Idle modes

The 12-bit ADC configuration supports all the above features, except:

- In the 12-bit configuration, conversion speeds of up to 500 ksps are supported
- There is only 1 sample/hold amplifier in the 12-bit configuration, so simultaneous sampling of multiple channels is not supported.

Depending on the particular device pinout, the ADC can have up to 32 analog input pins, designated AN0 through AN31. In addition, there are two analog input pins for external voltage reference connections. These voltage reference inputs may be shared with other analog input pins. The actual number of analog input pins and external voltage reference input configuration will depend on the specific device.

A block diagram of the ADC is shown in Figure 21-1.

21.2 ADC Initialization

The following configuration steps should be performed.

1. Configure the ADC module:
   a) Select port pins as analog inputs (ADxPCFGH<15:0> or ADxPCFGL<15:0>).
   b) Select voltage reference source to match expected range on analog inputs (ADxCON2<15:13>).
   c) Select the analog conversion clock to match desired data rate with processor clock (ADxCON3<7:0>).
   d) Determine how many S/H channels will be used (ADxCON2<9:8> and ADxPCFGH<15:0> or ADxPCFGL<15:0>).
   e) Select the appropriate sample/conversion sequence (ADxCON1<7:5> and ADxCON3<12:8>).
   f) Select how conversion results are presented in the buffer (ADxCON1<9:8>).
   g) Turn on ADC module (ADxCON1<15>).
2. Configure ADC interrupt (if required):
   a) Clear the ADxIF bit.
   b) Select ADC interrupt priority.

21.3 ADC and DMA

If more than one conversion result needs to be buffered before triggering an interrupt, DMA data transfers can be used. Both ADC1 and ADC2 can trigger a DMA data transfer. If ADC1 or ADC2 is selected as the DMA IRQ source, a DMA transfer occurs when the AD1IF or AD2IF bit gets set as a result of an ADC1 or ADC2 sample conversion sequence.

The SMPI<3:0> bits (ADxCON2<5:2>) are used to select how often the DMA RAM buffer pointer is incremented.

The ADDMABM bit (ADxCON1<12>) determines how the conversion results are filled in the DMA RAM buffer area being used for ADC. If this bit is set, DMA buffers are written in the order of conversion. The module will provide an address to the DMA channel that is the same as the address used for the non-DMA stand-alone buffer. If the ADDMABM bit is cleared, then DMA buffers are written in Scatter/Gather mode. The module will provide a scatter/gather address to the DMA channel, based on the index of the analog input and the size of the DMA buffer.

© 2009-2012 Microchip Technology Inc.

FIGURE 21-1: ADCx MODULE BLOCK DIAGRAM

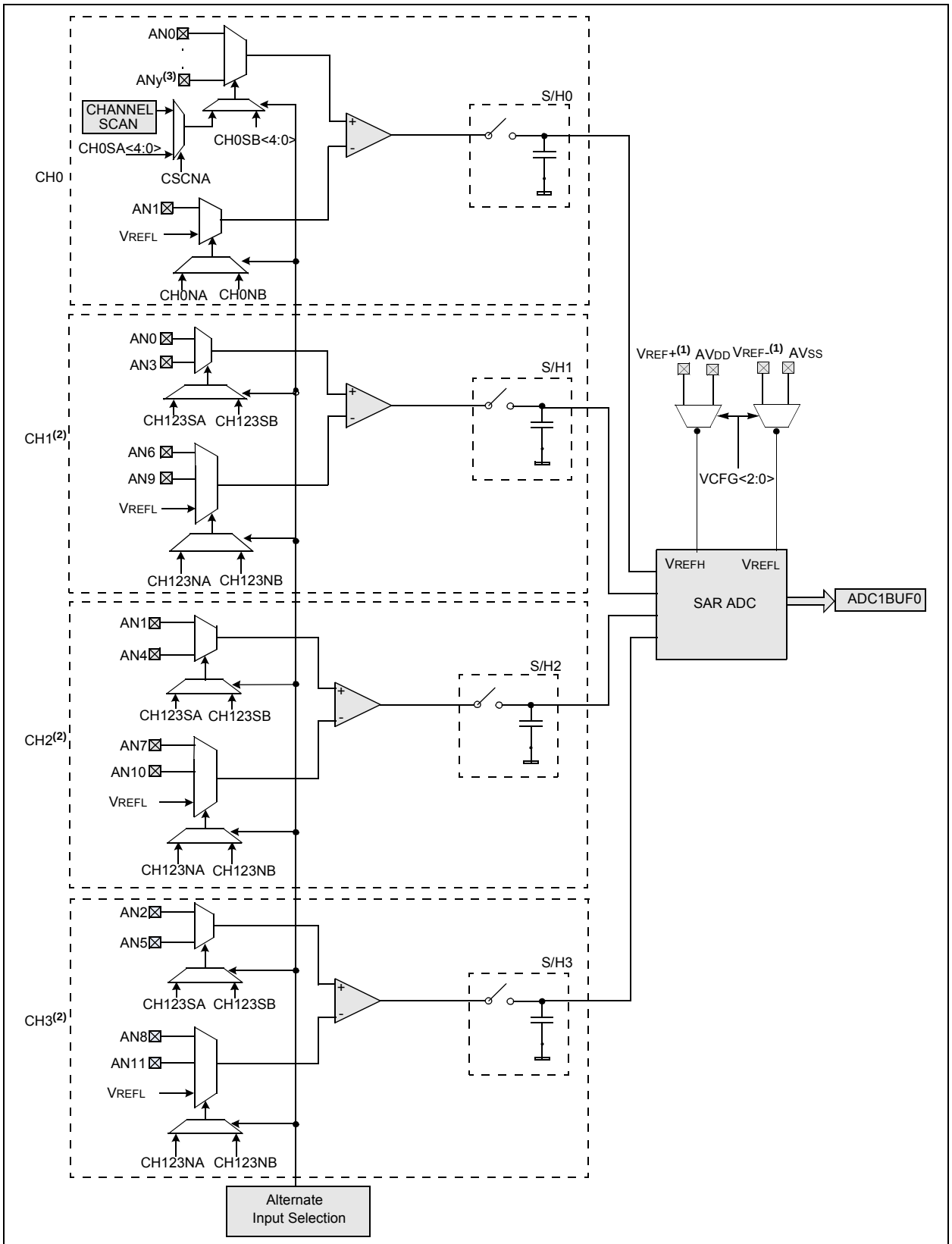

Note 1: VREF+, VREF- inputs can be multiplexed with other analog inputs.
2: Channels 1, 2 and 3 are not applicable for the 12-bit mode of operation.
3: For 64-pin devices, y = 17; for 80-pin devices, y = 23; for 100-pin devices, y = 31; for ADC2, y = 15.

© 2009-2012 Microchip Technology Inc.

FIGURE 21-2: ADC CONVERSION CLOCK PERIOD BLOCK DIAGRAM

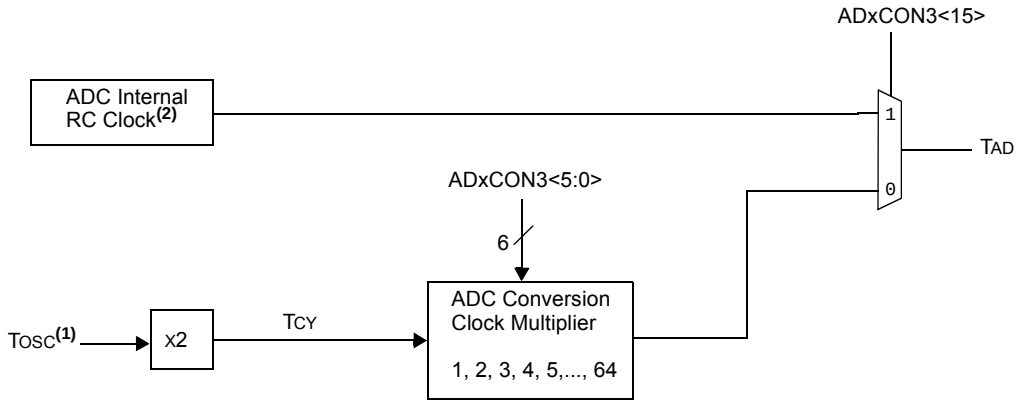

Note 1: Refer to Figure 9-2 for the derivation of FOSC when the PLL is enabled. If the PLL is not used, FOSC is equal to the clock source frequency. TOSC = 1/FOSC.

2: See the ADC electrical specifications for the exact RC clock value.

21.4 ADC Helpful Tips

1. The SMPI<3:0> (AD1CON2<5:2>) control bits:
   a) Determine when the ADC interrupt flag is set and an interrupt is generated if enabled.
   b) When the CSCNA bit (AD1CON2<10>) is set to ‘1’, determines when the ADC analog scan channel list defined in the AD1CSSL/AD1CSSH registers starts over from the beginning.
   c) On devices without a DMA peripheral, determines when ADC result buffer pointer to ADC1BUF0-ADC1BUFF, gets reset back to the beginning at ADC1BUF0.
2. On devices without a DMA module, the ADC has 16 result buffers. ADC conversion results are stored sequentially in ADC1BUF0-ADC1BUFF regardless of which analog inputs are being used subject to the SMPI<3:0> bits (AD1CON2<5:2>) and the condition described in 1c above. There is no relationship between the ANx input being measured and which ADC buffer (ADC1BUF0-ADC1BUFF) that the conversion results will be placed in.
3. On devices with a DMA module, the ADC module has only 1 ADC result buffer, (i.e., ADC1BUF0), per ADC peripheral and the ADC conversion result must be read either by the CPU or DMA controller before the next ADC conversion is complete to avoid overwriting the previous value.
4. The DONE bit (AD1CON1<0>) is only cleared at the start of each conversion and is set at the completion of the conversion, but remains set indefinitely even through the next sample phase until the next conversion begins. If application code is monitoring the DONE bit in any kind of software loop, the user must consider this behavior because the CPU code execution is faster than the ADC. As a result, in manual sample mode, particularly where the users code is setting the SAMP bit (AD1CON1<1>), the DONE bit should also be cleared by the user application just before setting the SAMP bit.
5. On devices with two ADC modules, the ADCxPCFG registers for both ADC modules must be set to a logic ‘1’ to configure a target I/O pin as a digital I/O pin. Failure to do so means that any alternate digital input function will always see only a logic ‘0’ as the digital input buffer is held in Disable mode.

21.5 ADC Resources

Many useful resources related to ADC are provided on the main product page of the Microchip web site for the devices listed in this data sheet. This product page, which can be accessed using this link, contains the latest updates and additional information.

Note:	In the event you are not able to access the product page using the link above, enter this URL in your browser: http://www.microchip.com/wwwproducts/Devices.aspx?dDocName=en546064

21.5.1 KEY RESOURCES

- **Section 16. “Analog-to-Digital Converter (ADC)”** (DS70183)
- Code Samples
- Application Notes
- Software Libraries
- Webinars
- All related dsPIC33F/PIC24H Family Reference Manuals Sections
- Development Tools

© 2009-2012 Microchip Technology Inc.

REGISTER 21-1: ADxCON1: ADCx CONTROL REGISTER 1 (where x = 1 or 2)

R/W-0	U-0	R/W-0	R/W-0	U-0	R/W-0	R/W-0	R/W-0
ADON	—	ADSIDL	ADDMABM	—	AD12B	FORM<1:0>	
bit 15							bit 8

R/W-0	R/W-0	R/W-0	U-0	R/W-0	R/W-0	R/W-0 HC,HS	R/C-0 HC, HS
SSRC<2:0>			—	SIMSAM	ASAM	SAMP	DONE
bit 7							bit 0

Legend:	HC = Cleared by hardware	HS = Set by hardware	C = Clear only bit
R = Readable bit	W = Writable bit	U = Unimplemented bit, read as ‘0’	
-n = Value at POR	‘1’ = Bit is set	‘0’ = Bit is cleared	x = Bit is unknown

bit 15 **ADON:** ADC Operating Mode bit
1 = ADC module is operating
0 = ADC is off

bit 14 **Unimplemented:** Read as ‘0’

bit 13 **ADSIDL:** Stop in Idle Mode bit
1 = Discontinue module operation when device enters Idle mode
0 = Continue module operation in Idle mode

bit 12 **ADDMABM:** DMA Buffer Build Mode bit
1 = DMA buffers are written in the order of conversion. The module will provide an address to the DMA channel that is the same as the address used for the non-DMA stand-alone buffer
0 = DMA buffers are written in Scatter/Gather mode. The module will provide a scatter/gather address to the DMA channel, based on the index of the analog input and the size of the DMA buffer

bit 11 **Unimplemented:** Read as ‘0’

bit 10 **AD12B:** 10-Bit or 12-Bit Operation Mode bit
1 = 12-bit, 1-channel ADC operation
0 = 10-bit, 4-channel ADC operation

bit 9-8 **FORM<1:0>:** Data Output Format bits
For 10-bit operation:
11 = Signed fractional (DOUT = sddd dddd dd00 0000, where s = .NOT.d<9>)
10 = Fractional (DOUT = dddd dddd dd00 0000)
01 = Signed integer (DOUT = ssss sssd dddd dddd, where s = .NOT.d<9>)
00 = Integer (DOUT = 0000 00dd dddd dddd)
For 12-bit operation:
11 = Signed fractional (DOUT = sddd dddd dddd 0000, where s = .NOT.d<11>)
10 = Fractional (DOUT = dddd dddd dddd 0000)
01 = Signed Integer (DOUT = ssss sddd dddd dddd, where s = .NOT.d<11>)
00 = Integer (DOUT = 0000 dddd dddd dddd)

bit 7-5 **SSRC<2:0>:** Sample Clock Source Select bits
111 = Internal counter ends sampling and starts conversion (auto-convert)
110 = Reserved
101 = Reserved
100 = GP timer (Timer5 for ADC1, Timer3 for ADC2) compare ends sampling and starts conversion
011 = Reserved
010 = GP timer (Timer3 for ADC1, Timer5 for ADC2) compare ends sampling and starts conversion
001 = Active transition on INT0 pin ends sampling and starts conversion
000 = Clearing sample bit ends sampling and starts conversion

bit 4 **Unimplemented:** Read as ‘0’

REGISTER 21-1: ADxCON1: ADCx CONTROL REGISTER 1 (where x = 1 or 2) (CONTINUED)

bit 3 **SIMSAM:** Simultaneous Sample Select bit (only applicable when CHPS<1:0> = 01 or 1x)
When AD12B = 1, SIMSAM is: U-0, Unimplemented, Read as '0'
1 = Samples CH0, CH1, CH2, CH3 simultaneously (when CHPS<1:0> = 1x); or
Samples CH0 and CH1 simultaneously (when CHPS<1:0> = 01)
0 = Samples multiple channels individually in sequence

bit 2 **ASAM:** ADC Sample Auto-Start bit
1 = Sampling begins immediately after last conversion. SAMP bit is auto-set
0 = Sampling begins when SAMP bit is set

bit 1 **SAMP:** ADC Sample Enable bit
1 = ADC sample/hold amplifiers are sampling
0 = ADC sample/hold amplifiers are holding
If ASAM = 0, software may write '1' to begin sampling. Automatically set by hardware if ASAM = 1.
If SSRC = 000, software may write '0' to end sampling and start conversion. If SSRC ≠ 000, automatically cleared by hardware to end sampling and start conversion.

bit 0 **DONE:** ADC Conversion Status bit
1 = ADC conversion cycle is completed
0 = ADC conversion not started or in progress
Automatically set by hardware when ADC conversion is complete. Software may write '0' to clear DONE status (software not allowed to write '1'). Clearing this bit will NOT affect any operation in progress. Automatically cleared by hardware at start of a new conversion.

© 2009-2012 Microchip Technology Inc.

REGISTER 21-2: ADxCON2: ADCx CONTROL REGISTER 2 (where x = 1 or 2)

R/W-0	R/W-0	R/W-0	U-0	U-0	R/W-0	R/W-0	R/W-0
VCFG<2:0>			—	—	CSCNA	CHPS<1:0>	
bit 15							bit 8

R-0	U-0	R/W-0	R/W-0	R/W-0	R/W-0	R/W-0	R/W-0
BUFS	—	SMPI<3:0>				BUFM	ALTS
bit 7							bit 0

Legend:			
R = Readable bit	W = Writable bit	U = Unimplemented bit, read as ‘0’	
-n = Value at POR	‘1’ = Bit is set	‘0’ = Bit is cleared	x = Bit is unknown

bit 15-13 **VCFG<2:0>:** Converter Voltage Reference Configuration bits

	VREF+	VREF-
000	AVDD	AVSS
001	External VREF+	AVSS
010	AVDD	External VREF-
011	External VREF+	External VREF-
1xx	AVDD	Avss

bit 12-11 **Unimplemented:** Read as ‘0’

bit 10 **CSCNA:** Scan Input Selections for CH0+ during Sample A bit
1 = Scan inputs
0 = Do not scan inputs

bit 9-8 **CHPS<1:0>:** Selects Channels Utilized bits
When AD12B = 1, CHPS<1:0> is: U-0, Unimplemented, Read as ‘0’
1x = Converts CH0, CH1, CH2 and CH3
01 = Converts CH0 and CH1
00 = Converts CH0

bit 7 **BUFS:** Buffer Fill Status bit (only valid when BUFM = 1)
1 = ADC is currently filling second half of buffer, user should access data in first half
0 = ADC is currently filling first half of buffer, user should access data in second half

bit 6 **Unimplemented:** Read as ‘0’

bit 5-2 **SMPI<3:0>:** Selects Increment Rate for DMA Addresses bits or number of sample/conversion operations per interrupt
1111 = Increments the DMA address or generates interrupt after completion of every 16th sample/conversion operation
1110 = Increments the DMA address or generates interrupt after completion of every 15th sample/conversion operation
•
•
•
0001 = Increments the DMA address or generates interrupt after completion of every 2nd sample/conversion operation
0000 = Increments the DMA address or generates interrupt after completion of every sample/conversion operation

bit 1 **BUFM:** Buffer Fill Mode Select bit
1 = Starts filling first half of buffer on first interrupt and second half of the buffer on next interrupt
0 = Always starts filling buffer from the beginning

bit 0 **ALTS:** Alternate Input Sample Mode Select bit
1 = Uses channel input selects for Sample A on first sample and Sample B on next sample
0 = Always uses channel input selects for Sample A

REGISTER 21-3: ADxCON3: ADCx CONTROL REGISTER 3

R/W-0	U-0	U-0	R/W-0	R/W-0	R/W-0	R/W-0	R/W-0
ADRC	—	—	SAMC<4:0>(1)				
bit 15							bit 8

R/W-0	R/W-0	R/W-0	R/W-0	R/W-0	R/W-0	R/W-0	R/W-0
ADCS<7:0>(2)							
bit 7							bit 0

Legend:			
R = Readable bit	W = Writable bit	U = Unimplemented bit, read as ‘0’	
-n = Value at POR	‘1’ = Bit is set	‘0’ = Bit is cleared	x = Bit is unknown

bit 15 **ADRC:** ADC Conversion Clock Source bit
1 = ADC internal RC clock
0 = Clock derived from system clock

bit 14-13 **Unimplemented:** Read as ‘0’

bit 12-8 **SAMC<4:0>:** Auto Sample Time bits(1)
11111 = 31 TAD
•
•
•
00001 = 1 TAD
00000 = 0 TAD

bit 7-0 **ADCS<7:0>:** ADC Conversion Clock Select bits(2)
11111111 = Reserved
•
•
•
01000000 = Reserved
00111111 = TCY · (ADCS<7:0> + 1) = 64 · TCY = TAD
•
•
•
00000010 = TCY · (ADCS<7:0> + 1) = 3 · TCY = TAD
00000001 = TCY · (ADCS<7:0> + 1) = 2 · TCY = TAD
00000000 = TCY · (ADCS<7:0> + 1) = 1 · TCY = TAD

Note 1: This bit only used if ADxCON1<7:5> (SSRC<2:0>) = 111.
2: This bit is not used if ADxCON3<15> (ADRC) = 1.

© 2009-2012 Microchip Technology Inc.

REGISTER 21-4: ADxCON4: ADCx CONTROL REGISTER 4

U-0	U-0	U-0	U-0	U-0	U-0	U-0	U-0
—	—	—	—	—	—	—	—
bit 15							bit 8

U-0	U-0	U-0	U-0	U-0	R/W-0	R/W-0	R/W-0
—	—	—	—	—	DMABL<2:0>		
bit 7							bit 0

Legend:			
R = Readable bit	W = Writable bit	U = Unimplemented bit, read as ‘0’	
-n = Value at POR	‘1’ = Bit is set	‘0’ = Bit is cleared	x = Bit is unknown

bit 15-3 **Unimplemented:** Read as ‘0’

bit 2-0 **DMABL<2:0>:** Selects Number of DMA Buffer Locations per Analog Input bits

111 = Allocates 128 words of buffer to each analog input
110 = Allocates 64 words of buffer to each analog input
101 = Allocates 32 words of buffer to each analog input
100 = Allocates 16 words of buffer to each analog input
011 = Allocates 8 words of buffer to each analog input
010 = Allocates 4 words of buffer to each analog input
001 = Allocates 2 words of buffer to each analog input
000 = Allocates 1 word of buffer to each analog input

REGISTER 21-5: ADxCHS123: ADCx INPUT CHANNEL 1, 2, 3 SELECT REGISTER

U-0	U-0	U-0	U-0	U-0	R/W-0	R/W-0	R/W-0
—	—	—	—	—	CH123NB<1:0>		CH123SB
bit 15							bit 8

U-0	U-0	U-0	U-0	U-0	R/W-0	R/W-0	R/W-0
—	—	—	—	—	CH123NA<1:0>		CH123SA
bit 7							bit 0

Legend:			
R = Readable bit	W = Writable bit	U = Unimplemented bit, read as ‘0’	
-n = Value at POR	‘1’ = Bit is set	‘0’ = Bit is cleared	x = Bit is unknown

bit 15-11 **Unimplemented:** Read as ‘0’

bit 10-9 **CH123NB<1:0>:** Channel 1, 2, 3 Negative Input Select for Sample B bits
When AD12B = 1, CHxNB is: U-0, Unimplemented, Read as ‘0’
11 = CH1 negative input is AN9, CH2 negative input is AN10, CH3 negative input is AN11
10 = CH1 negative input is AN6, CH2 negative input is AN7, CH3 negative input is AN8
0x = CH1, CH2, CH3 negative input is VREF-

bit 8 **CH123SB:** Channel 1, 2, 3 Positive Input Select for Sample B bit
When AD12B = 1, CHxSB is: U-0, Unimplemented, Read as ‘0’
1 = CH1 positive input is AN3, CH2 positive input is AN4, CH3 positive input is AN5
0 = CH1 positive input is AN0, CH2 positive input is AN1, CH3 positive input is AN2

bit 7-3 **Unimplemented:** Read as ‘0’

bit 2-1 **CH123NA<1:0>:** Channel 1, 2, 3 Negative Input Select for Sample A bits
When AD12B = 1, CHxNA is: U-0, Unimplemented, Read as ‘0’
11 = CH1 negative input is AN9, CH2 negative input is AN10, CH3 negative input is AN11
10 = CH1 negative input is AN6, CH2 negative input is AN7, CH3 negative input is AN8
0x = CH1, CH2, CH3 negative input is VREF-

bit 0 **CH123SA:** Channel 1, 2, 3 Positive Input Select for Sample A bit
When AD12B = 1, CHxSA is: U-0, Unimplemented, Read as ‘0’
1 = CH1 positive input is AN3, CH2 positive input is AN4, CH3 positive input is AN5
0 = CH1 positive input is AN0, CH2 positive input is AN1, CH3 positive input is AN2

© 2009-2012 Microchip Technology Inc.

REGISTER 21-6: ADxCHS0: ADCx INPUT CHANNEL 0 SELECT REGISTER

R/W-0	U-0	U-0	R/W-0	R/W-0	R/W-0	R/W-0	R/W-0
CH0NB	—	—	CH0SB<4:0>(1)				
bit 15							bit 8

R/W-0	U-0	U-0	R/W-0	R/W-0	R/W-0	R/W-0	R/W-0
CH0NA	—	—	CH0SA<4:0>(1)				
bit 7							bit 0

Legend:			
R = Readable bit	W = Writable bit	U = Unimplemented bit, read as ‘0’	
-n = Value at POR	‘1’ = Bit is set	‘0’ = Bit is cleared	x = Bit is unknown

bit 15 **CH0NB:** Channel 0 Negative Input Select for Sample B bit
Same definition as bit 7.

bit 14-13 **Unimplemented:** Read as ‘0’

bit 12-8 **CH0SB<4:0>:** Channel 0 Positive Input Select for Sample B bits(1)
11111 = Channel 0 positive input is AN31
11110 = Channel 0 positive input is AN30
•
•
•
00010 = Channel 0 positive input is AN2
00001 = Channel 0 positive input is AN1
00000 = Channel 0 positive input is AN0

bit 7 **CH0NA:** Channel 0 Negative Input Select for Sample A bit
1 = Channel 0 negative input is AN1
0 = Channel 0 negative input is V_{REF-}

bit 6-5 **Unimplemented:** Read as ‘0’

bit 4-0 **CH0SA<4:0>:** Channel 0 Positive Input Select for Sample A bits(1)
11111 = Channel 0 positive input is AN31
11110 = Channel 0 positive input is AN30
•
•
•
00010 = Channel 0 positive input is AN2
00001 = Channel 0 positive input is AN1
00000 = Channel 0 positive input is AN0

Note 1: ADC2 can only select AN0 through AN15 as positive input.

REGISTER 21-7: ADxCSSH: ADCx INPUT SCAN SELECT REGISTER HIGH(1,2)

R/W-0	R/W-0	R/W-0	R/W-0	R/W-0	R/W-0	R/W-0	R/W-0
CSS31	CSS30	CSS29	CSS28	CSS27	CSS26	CSS25	CSS24
bit 15							bit 8

R/W-0	R/W-0	R/W-0	R/W-0	R/W-0	R/W-0	R/W-0	R/W-0
CSS23	CSS22	CSS21	CSS20	CSS19	CSS18	CSS17	CSS16
bit 7							bit 0

Legend:			
R = Readable bit	W = Writable bit	U = Unimplemented bit, read as ‘0’	
-n = Value at POR	‘1’ = Bit is set	‘0’ = Bit is cleared	x = Bit is unknown

bit 15-0 **CSS<31:16>:** ADC Input Scan Selection bits
`1` = Select ANx for input scan
`0` = Skip ANx for input scan

Note 1: On devices without 32 analog inputs, all ADxCSSH bits may be selected by user. However, inputs selected for scan without a corresponding input on device will convert VREFL.

2: CSSx = ANx, where x = 16 through 31.

REGISTER 21-8: ADxCSSL: ADCx INPUT SCAN SELECT REGISTER LOW(1,2)

R/W-0	R/W-0	R/W-0	R/W-0	R/W-0	R/W-0	R/W-0	R/W-0
CSS15	CSS14	CSS13	CSS12	CSS11	CSS10	CSS9	CSS8
bit 15							bit 8

R/W-0	R/W-0	R/W-0	R/W-0	R/W-0	R/W-0	R/W-0	R/W-0
CSS7	CSS6	CSS5	CSS4	CSS3	CSS2	CSS1	CSS0
bit 7							bit 0

Legend:			
R = Readable bit	W = Writable bit	U = Unimplemented bit, read as ‘0’	
-n = Value at POR	‘1’ = Bit is set	‘0’ = Bit is cleared	x = Bit is unknown

bit 15-0 **CSS<15:0>:** ADC Input Scan Selection bits
`1` = Select ANx for input scan
`0` = Skip ANx for input scan

Note 1: On devices without 16 analog inputs, all ADxCSSL bits may be selected by user. However, inputs selected for scan without a corresponding input on device will convert VREF-.

2: CSSx = ANx, where x = 0 through 15.

© 2009-2012 Microchip Technology Inc.

REGISTER 21-9: AD1PCFGH: ADC1 PORT CONFIGURATION REGISTER HIGH(1,2,3,4)

R/W-0	R/W-0	R/W-0	R/W-0	R/W-0	R/W-0	R/W-0	R/W-0
PCFG31	PCFG30	PCFG29	PCFG28	PCFG27	PCFG26	PCFG25	PCFG24
bit 15							bit 8

R/W-0	R/W-0	R/W-0	R/W-0	R/W-0	R/W-0	R/W-0	R/W-0
PCFG23	PCFG22	PCFG21	PCFG20	PCFG19	PCFG18	PCFG17	PCFG16
bit 7							bit 0

Legend:			
R = Readable bit	W = Writable bit	U = Unimplemented bit, read as ‘0’	
-n = Value at POR	‘1’ = Bit is set	‘0’ = Bit is cleared	x = Bit is unknown

bit 15-0 **PCFG<31:16>:** ADC Port Configuration Control bits
`1` = Port pin in Digital mode, port read input enabled, ADC input multiplexer connected to AVSS
`0` = Port pin in Analog mode, port read input disabled, ADC samples pin voltage

Note 1: On devices without 32 analog inputs, all PCFG bits are R/W by user. However, PCFG bits are ignored on ports without a corresponding input on device.

2: ADC2 only supports analog inputs AN0-AN15; therefore, no ADC2 port Configuration register exists.

3: PCFGx = ANx, where x = 16 through 31.

4: PCFGx bits have no effect if ADC module is disabled by setting ADxMD bit in the PMDx register. In this case all port pins multiplexed with ANx will be in Digital mode.

REGISTER 21-10: ADxPCFGL: ADCx PORT CONFIGURATION REGISTER LOW(1,2,3,4)

R/W-0	R/W-0	R/W-0	R/W-0	R/W-0	R/W-0	R/W-0	R/W-0
PCFG15	PCFG14	PCFG13	PCFG12	PCFG11	PCFG10	PCFG9	PCFG8
bit 15							bit 8

R/W-0	R/W-0	R/W-0	R/W-0	R/W-0	R/W-0	R/W-0	R/W-0
PCFG7	PCFG6	PCFG5	PCFG4	PCFG3	PCFG2	PCFG1	PCFG0
bit 7							bit 0

Legend:			
R = Readable bit	W = Writable bit	U = Unimplemented bit, read as ‘0’	
-n = Value at POR	‘1’ = Bit is set	‘0’ = Bit is cleared	x = Bit is unknown

bit 15-0 **PCFG<15:0>:** ADC Port Configuration Control bits
`1` = Port pin in Digital mode, port read input enabled, ADC input multiplexer connected to AVSS
`0` = Port pin in Analog mode, port read input disabled, ADC samples pin voltage

Note 1: On devices without 16 analog inputs, all PCFG bits are R/W by user. However, PCFG bits are ignored on ports without a corresponding input on device.

2: On devices with two analog-to-digital modules, both AD1PCFGL and AD2PCFGL will affect the configuration of port pins multiplexed with AN0-AN15.

3: PCFGx = ANx, where x = 0 through 15.

4: PCFGx bits have no effect if ADC module is disabled by setting ADxMD bit in the PMDx register. In this case all port pins multiplexed with ANx will be in Digital mode

NOTES:

© 2009-2012 Microchip Technology Inc.

22.0 SPECIAL FEATURES

Note 1: This data sheet summarizes the features of the dsPIC33FJXXXGPX06A/X08A/X10A family of devices. However, it is not intended to be a comprehensive reference source. To complement the information in this data sheet, refer to **Section 23. "CodeGuard™ Security"** (DS70199), **Section 24. "Programming and Diagnostics"** (DS70207), and **Section 25. "Device Configuration"** (DS70194) in the *"dsPIC33F/PIC24H Family Reference Manual"*, which are available from the Microchip web site (www.microchip.com).

2: Some registers and associated bits described in this section may not be available on all devices. Refer to **Section 4.0 "Memory Organization"** in this data sheet for device-specific register and bit information.

dsPIC33FJXXXGPX06A/X08A/X10A devices include the following features intended to maximize application flexibility and reliability, and minimize cost through elimination of external components:

- Flexible Configuration
- Watchdog Timer (WDT)
- Code Protection and CodeGuard™ Security
- JTAG Boundary Scan Interface
- In-Circuit Serial Programming™ (ICSP™)
- In-Circuit Emulation

22.1 Configuration Bits

dsPIC33FJXXXGPX06A/X08A/X10A devices provide nonvolatile memory implementation for device configuration bits. Refer to **Section 25. "Device Configuration"** (DS70194) of the *"dsPIC33F/PIC24H Family Reference Manual"*, for more information on this implementation.

The Configuration bits can be programmed (read as '0'), or left unprogrammed (read as '1'), to select various device configurations. These bits are mapped starting at program memory location 0xF80000.

The device Configuration register map is shown in Table 22-1.

The individual Configuration bit descriptions for the Configuration registers are shown in Table 22-2.

Note that address 0xF80000 is beyond the user program memory space. In fact, it belongs to the configuration memory space (0x800000-0xFFFFFF) which can only be accessed using table reads and table writes.

TABLE 22-1: DEVICE CONFIGURATION REGISTER MAP

Address	Name	Bit 7	Bit 6	Bit 5	Bit 4	Bit 3	Bit 2	Bit 1	Bit 0
0xF80000	FBS	RBS<1:0>		—	—	BSS<2:0>			BWRP
0xF80002	FSS	RSS<1:0>		—	—	SSS<2:0>			SWRP
0xF80004	FGS	—	—	—	—	—	GSS1	GSS0	GWRP
0xF80006	FOSCSEL	IESO	Reserved(2)	—	—	—	FNOSC<2:0>		
0xF80008	FOSC	FCKSM<1:0>		—	—	—	OSCIOFNC	POSCMD<1:0>	
0xF8000A	FWDT	FWDTEN	WINDIS	PLLKEN(3)	WDTPRE	WDTPOST<3:0>			
0xF8000C	FPOR	Reserved(4)			—	—	FPWRT<2:0>		
0xF8000E	FICD	Reserved(1)		JTAGEN	—	—	—	ICS<1:0>	
0xF80010	FUID0	User Unit ID Byte 0							
0xF80012	FUID1	User Unit ID Byte 1							
0xF80014	FUID2	User Unit ID Byte 2							
0xF80016	FUID3	User Unit ID Byte 3							

Legend: — = unimplemented bit, read as '0'.

Note 1: These bits are reserved for use by development tools and must be programmed as '1'.

2: When read, this bit returns the current programmed value.

3: This bit is unimplemented on dsPIC33FJ64GPX06A/X08A/X10A and dsPIC33FJ128GPX06A/X08A/X10A devices and reads as '0'.

4: These bits are reserved and always read as '1'.

TABLE 22-2: CONFIGURATION BITS DESCRIPTION

Bit Field	Register	RTSP Effect	Description
BWRP	FBS	Immediate	Boot Segment Program Flash Write Protection 1 = Boot segment may be written 0 = Boot segment is write-protected
BSS<2:0>	FBS	Immediate	Boot Segment Program Flash Code Protection Size X11 = No Boot program Flash segment Boot space is 1K IW less VS 110 = Standard security; boot program Flash segment starts at End of VS, ends at 0007FEh 010 = High security; boot program Flash segment starts at End of VS, ends at 0007FEh Boot space is 4K IW less VS 101 = Standard security; boot program Flash segment starts at End of VS, ends at 001FFEh 001 = High security; boot program Flash segment starts at End of VS, ends at 001FFEh Boot space is 8K IW less VS 100 = Standard security; boot program Flash segment starts at End of VS, ends at 003FFEh 000 = High security; boot program Flash segment starts at End of VS, ends at 003FFEh
RBS<1:0>	FBS	Immediate	Boot Segment RAM Code Protection 11 = No Boot RAM defined 10 = Boot RAM is 128 Bytes 01 = Boot RAM is 256 Bytes 00 = Boot RAM is 1024 Bytes
SWRP	FSS	Immediate	Secure Segment Program Flash Write Protection 1 = Secure segment may be written 0 = Secure segment is write-protected

© 2009-2012 Microchip Technology Inc.

TABLE 22-2: CONFIGURATION BITS DESCRIPTION (CONTINUED)

Bit Field	Register	RTSP Effect	Description
SSS<2:0>	FSS	Immediate	Secure Segment Program Flash Code Protection Size **(FOR 128K and 256K DEVICES)** X11 = No Secure program Flash segment Secure space is 8K IW less BS 110 = Standard security; secure program Flash segment starts at End of BS, ends at 0x003FFE 010 = High security; secure program Flash segment starts at End of BS, ends at 0x003FFE Secure space is 16K IW less BS 101 = Standard security; secure program Flash segment starts at End of BS, ends at 0x007FFE 001 = High security; secure program Flash segment starts at End of BS, ends at 0x007FFE Secure space is 32K IW less BS 100 = Standard security; secure program Flash segment starts at End of BS, ends at 0x00FFFE 000 = High security; secure program Flash segment starts at End of BS, ends at 0x00FFFE **(FOR 64K DEVICES)** X11 = No Secure program Flash segment Secure space is 4K IW less BS 110 = Standard security; secure program Flash segment starts at End of BS, ends at 0x001FFE 010 = High security; secure program Flash segment starts at End of BS, ends at 0x001FFE Secure space is 8K IW less BS 101 = Standard security; secure program Flash segment starts at End of BS, ends at 0x003FFE 001 = High security; secure program Flash segment starts at End of BS, ends at 0x003FFE Secure space is 16K IW less BS 100 = Standard security; secure program Flash segment starts at End of BS, ends at 007FFEh 000 = High security; secure program Flash segment starts at End of BS, ends at 0x007FFE
RSS<1:0>	FSS	Immediate	Secure Segment RAM Code Protection 11 = No Secure RAM defined 10 = Secure RAM is 256 Bytes less BS RAM 01 = Secure RAM is 2048 Bytes less BS RAM 00 = Secure RAM is 4096 Bytes less BS RAM
GSS<1:0>	FGS	Immediate	General Segment Code-Protect bit 11 = User program memory is not code-protected 10 = Standard security; general program Flash segment starts at End of SS, ends at EOM 0x = High security; general program Flash segment starts at End of SS, ends at EOM

TABLE 22-2: CONFIGURATION BITS DESCRIPTION (CONTINUED)

Bit Field	Register	RTSP Effect	Description
GWRP	FGS	Immediate	General Segment Write-Protect bit 1 = User program memory is not write-protected 0 = User program memory is write-protected
IESO	FOSCSEL	Immediate	Two-speed Oscillator Start-up Enable bit 1 = Start-up device with FRC, then automatically switch to the user-selected oscillator source when ready 0 = Start-up device with user-selected oscillator source
FNOSC<2:0>	FOSCSEL	If clock switch is enabled, RTSP effect is on any device Reset; otherwise, Immediate	Initial Oscillator Source Selection bits 111 = Internal Fast RC (FRC) oscillator with postscaler 110 = Internal Fast RC (FRC) oscillator with divide-by-16 101 = LPRC oscillator 100 = Secondary (LP) oscillator 011 = Primary (XT, HS, EC) oscillator with PLL 010 = Primary (XT, HS, EC) oscillator 001 = Internal Fast RC (FRC) oscillator with PLL 000 = FRC oscillator
FCKSM<1:0>	FOSC	Immediate	Clock Switching Mode bits 1x = Clock switching is disabled, Fail-Safe Clock Monitor is disabled 01 = Clock switching is enabled, Fail-Safe Clock Monitor is disabled 00 = Clock switching is enabled, Fail-Safe Clock Monitor is enabled
OSCIOFNC	FOSC	Immediate	OSC2 Pin Function bit (except in XT and HS modes) 1 = OSC2 is clock output 0 = OSC2 is general purpose digital I/O pin
POSCMD<1:0>	FOSC	Immediate	Primary Oscillator Mode Select bits 11 = Primary oscillator disabled 10 = HS Crystal Oscillator mode 01 = XT Crystal Oscillator mode 00 = EC (External Clock) mode
FWDTEN	FWDT	Immediate	Watchdog Timer Enable bit 1 = Watchdog Timer always enabled (LPRC oscillator cannot be disabled. Clearing the SWDTEN bit in the RCON register will have no effect.) 0 = Watchdog Timer enabled/disabled by user software (LPRC can be disabled by clearing the SWDTEN bit in the RCON register)
WINDIS	FWDT	Immediate	Watchdog Timer Window Enable bit 1 = Watchdog Timer in Non-Window mode 0 = Watchdog Timer in Window mode
PLLKEN	FWDT	Immediate	PLL Lock Enable bit 1 = Clock switch to PLL source will wait until the PLL lock signal is valid. 0 = Clock switch will not wait for the PLL lock signal.
WDTPRE	FWDT	Immediate	Watchdog Timer Prescaler bit 1 = 1:128 0 = 1:32
WDTPOST	FWDT	Immediate	Watchdog Timer Postscaler bits 1111 = 1:32,768 1110 = 1:16,384 • • • 0001 = 1:2 0000 = 1:1

© 2009-2012 Microchip Technology Inc.

TABLE 22-2: CONFIGURATION BITS DESCRIPTION (CONTINUED)

Bit Field	Register	RTSP Effect	Description
FPWRT<2:0>	FPOR	Immediate	Power-on Reset Timer Value Select bits 111 = PWRT = 128 ms 110 = PWRT = 64 ms 101 = PWRT = 32 ms 100 = PWRT = 16 ms 011 = PWRT = 8 ms 010 = PWRT = 4 ms 001 = PWRT = 2 ms 000 = PWRT = Disabled
JTAGEN	FICD	Immediate	JTAG Enable bits 1 = JTAG enabled 0 = JTAG disabled
ICS<1:0>	FICD	Immediate	ICD Communication Channel Select bits 11 = Communicate on PGEC1 and PGED1 10 = Communicate on PGEC2 and PGED2 01 = Communicate on PGEC3 and PGED3 00 = Reserved

22.2 On-Chip Voltage Regulator

All of the dsPIC33FJXXXGPX06A/X08A/X10A devices power their core digital logic at a nominal 2.5V. This may create an issue for designs that are required to operate at a higher typical voltage, such as 3.3V. To simplify system design, all devices in the dsPIC33FJXXXGPX06A/X08A/X10A family incorporate an on-chip regulator that allows the device to run its core logic from VDD.

The regulator provides power to the core from the other VDD pins. The regulator requires that a low-ESR (less than 5 ohms) capacitor (such as tantalum or ceramic) be connected to the VCAP pin (Figure 22-1). This helps to maintain the stability of the regulator. The recommended value for the filter capacitor is provided in Table 25-13 of **Section 25.0 "Electrical Characteristics"**.

Note:	It is important for the low-ESR capacitor to be placed as close as possible to the VCAP pin.

On a POR, it takes approximately 20 µs for the on-chip voltage regulator to generate an output voltage. During this time, designated as TSTARTUP, code execution is disabled. TSTARTUP is applied every time the device resumes operation after any power-down.

FIGURE 22-1: CONNECTIONS FOR THE ON-CHIP VOLTAGE REGULATOR(1,2,3)

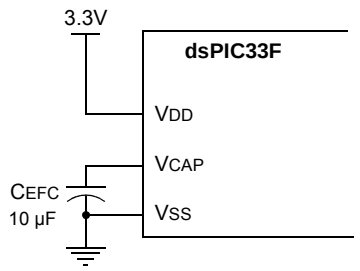

Note 1: These are typical operating voltages. Refer to Table 25-13 located in **Section 25.1 "DC Characteristics"** for the full operating ranges of VDD and VCAP.

2: It is important for the low-ESR capacitor to be placed as close as possible to the VCAP pin.

3: Typical VCAP pin voltage = 2.5V when VDD ≥ VDDMIN.

22.3 BOR: Brown-out Reset

The BOR (Brown-out Reset) module is based on an internal voltage reference circuit that monitors the regulated voltage VCAP. The main purpose of the BOR module is to generate a device Reset when a brown-out condition occurs. Brown-out conditions are generally caused by glitches on the AC mains (i.e., missing portions of the AC cycle waveform due to bad power transmission lines or voltage sags due to excessive current draw when a large inductive load is turned on).

A BOR will generate a Reset pulse which will reset the device. The BOR will select the clock source, based on the device Configuration bit values (FNOSC<2:0> and POSCMD<1:0>). Furthermore, if an oscillator mode is selected, the BOR will activate the Oscillator Start-up Timer (OST). The system clock is held until OST expires. If the PLL is used, then the clock will be held until the LOCK bit (OSCCON<5>) is '1'.

Concurrently, the PWRT time-out (TPWRT) will be applied before the internal Reset is released. If TPWRT = 0 and a crystal oscillator is being used, then a nominal delay of TFSCM = 100 is applied. The total delay in this case is TFSCM.

The BOR Status bit (RCON<1>) will be set to indicate that a BOR has occurred. The BOR circuit continues to operate while in Sleep or Idle modes and will reset the device should VDD fall below the BOR threshold voltage.

© 2009-2012 Microchip Technology Inc.

22.4 Watchdog Timer (WDT)

For dsPIC33FJXXXGPX06A/X08A/X10A devices, the WDT is driven by the LPRC oscillator. When the WDT is enabled, the clock source is also enabled.

The nominal WDT clock source from LPRC is 32 kHz. This feeds a prescaler and then can be configured for either 5-bit (divide-by-32) or 7-bit (divide-by-128) operation. The prescaler is set by the WDTPRE Configuration bit. With a 32 kHz input, the prescaler yields a nominal WDT time-out period (T_{WDT}) of 1 ms in 5-bit mode, or 4 ms in 7-bit mode.

A variable postscaler divides down the WDT prescaler output and allows for a wide range of time-out periods. The postscaler is controlled by the WDTPOST<3:0> Configuration bits (FWDT<3:0>) which allow the selection of a total of 16 settings, from 1:1 to 1:32,768. Using the prescaler and postscaler, time-out periods ranging from 1 ms to 131 seconds can be achieved.

The WDT, prescaler and postscaler are reset:

- On any device Reset
- On the completion of a clock switch, whether invoked by software (i.e., setting the OSWEN bit after changing the NOSC bits) or by hardware (i.e., Fail-Safe Clock Monitor)
- When a PWRSAV instruction is executed (i.e., Sleep or Idle mode is entered)
- When the device exits Sleep or Idle mode to resume normal operation
- By a CLRWDT instruction during normal execution

If the WDT is enabled, it will continue to run during Sleep or Idle modes. When the WDT time-out occurs, the device will wake the device and code execution will continue from where the PWRSAV instruction was executed. The corresponding SLEEP or IDLE bits (RCON<3,2>) will need to be cleared in software after the device wakes up.

The WDT flag bit, WDTO (RCON<4>), is not automatically cleared following a WDT time-out. To detect subsequent WDT events, the flag must be cleared in software.

> **Note:** The CLRWDT and PWRSAV instructions clear the prescaler and postscaler counts when executed.

The WDT is enabled or disabled by the FWDTEN Configuration bit in the FWDT Configuration register. When the FWDTEN Configuration bit is set, the WDT is always enabled.

The WDT can be optionally controlled in software when the FWDTEN Configuration bit has been programmed to '0'. The WDT is enabled in software by setting the SWDTEN control bit (RCON<5>). The SWDTEN control bit is cleared on any device Reset. The software WDT option allows the user to enable the WDT for critical code segments and disable the WDT during non-critical segments for maximum power savings.

> **Note:** If the WINDIS bit (FWDT<6>) is cleared, the CLRWDT instruction should be executed by the application software only during the last 1/4 of the WDT period. This CLRWDT window can be determined by using a timer. If a CLRWDT instruction is executed before this window, a WDT Reset occurs.

FIGURE 22-2: WDT BLOCK DIAGRAM

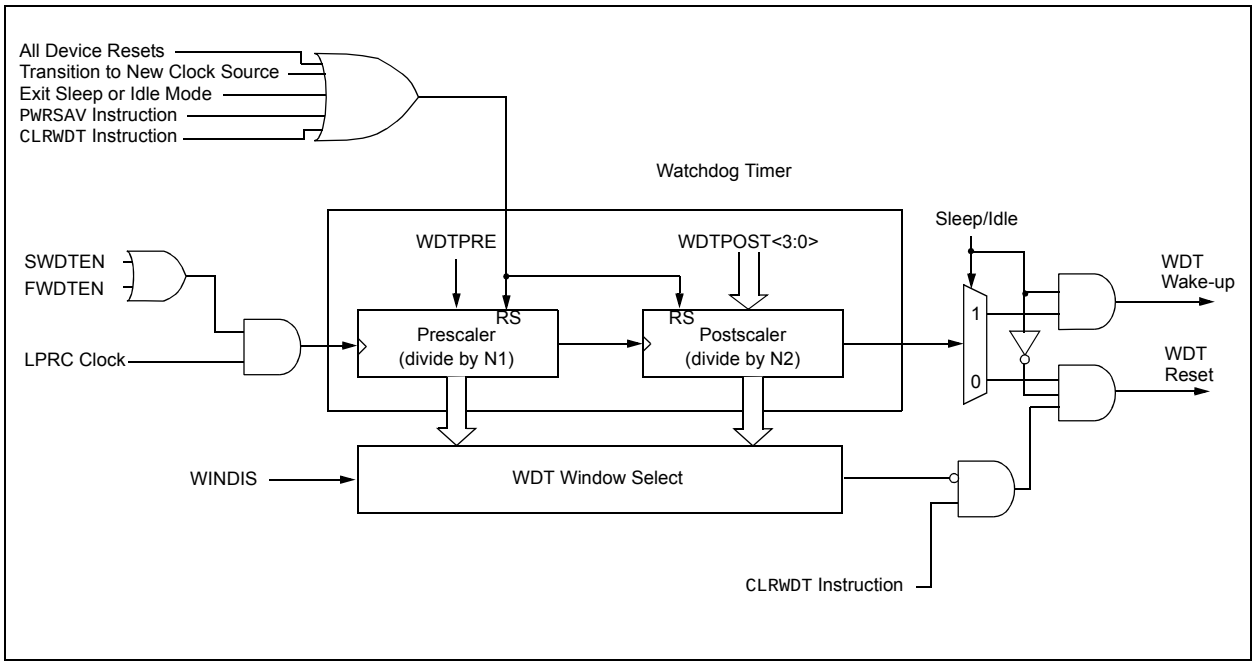

22.5 JTAG Interface

dsPIC33FJXXXGPX06A/X08A/X10A devices implement a JTAG interface, which supports boundary scan device testing, as well as in-circuit programming. Detailed information on the interface will be provided in future revisions of the document.

22.6 Code Protection and CodeGuard™ Security

The dsPIC33F product families offer the advanced implementation of CodeGuard™ Security. CodeGuard™ Security enables multiple parties to securely share resources (memory, interrupts and peripherals) on a single chip. This feature helps protect individual Intellectual Property in collaborative system designs.

When coupled with software encryption libraries, CodeGuard Security can be used to securely update Flash even when multiple IP are resident on the single chip. The code protection features vary depending on the actual dsPIC33F implemented. The following sections provide an overview of these features.

The code protection features are controlled by the Configuration registers: FBS, FSS and FGS.

Note:	Refer to **Section 23. "CodeGuard™ Security"** (DS70199) in the *"dsPIC33F/PIC24H Family Reference Manual"* for further information on usage, configuration and operation of CodeGuard™ Security.

22.7 In-Circuit Serial Programming

dsPIC33FJXXXGPX06A/X08A/X10A family digital signal controllers can be serially programmed while in the end application circuit. This is simply done with two lines for clock and data and three other lines for power, ground and the programming sequence. This allows customers to manufacture boards with unprogrammed devices and then program the digital signal controller just before shipping the product. This also allows the most recent firmware or a custom firmware, to be programmed. Please refer to the "*dsPIC33F/PIC24H Flash Programming Specification"* (DS70152) document for details about ICSP.

Any one out of three pairs of programming clock/data pins may be used:

- PGEC1 and PGED1
- PGEC2 and PGED2
- PGEC3 and PGED3

22.8 In-Circuit Debugger

When MPLAB® ICD 3 is selected as a debugger, the in-circuit debugging functionality is enabled. This function allows simple debugging functions when used with MPLAB IDE. Debugging functionality is controlled through the PGECx (Emulation/Debug Clock) and PGEDx (Emulation/Debug Data) pin functions.

Any one out of three pairs of debugging clock/data pins may be used:

- PGEC1 and PGED1
- PGEC2 and PGED2
- PGEC3 and PGED3

To use the in-circuit debugger function of the device, the design must implement ICSP connections to $\overline{MCLR}$, V_{DD}, V_{SS} and the PGEDx/PGECx pin pair. In addition, when the feature is enabled, some of the resources are not available for general use. These resources include the first 80 bytes of data RAM and two I/O pins.

© 2009-2012 Microchip Technology Inc.

23.0 INSTRUCTION SET SUMMARY

Note: This data sheet summarizes the features of the dsPIC33FJXXXGPX06A/X08A/X10A family of devices. However, it is not intended to be a comprehensive reference source. To complement the information in this data sheet, refer to the latest family reference sections of the *"dsPIC33F/PIC24H Family Reference Manual"*, which are available from the Microchip web site (www.microchip.com).

The dsPIC33F instruction set is identical to that of the dsPIC30F.

Most instructions are a single program memory word (24 bits). Only three instructions require two program memory locations.

Each single-word instruction is a 24-bit word, divided into an 8-bit opcode, which specifies the instruction type and one or more operands, which further specify the operation of the instruction.

The instruction set is highly orthogonal and is grouped into five basic categories:

- Word or byte-oriented operations
- Bit-oriented operations
- Literal operations
- DSP operations
- Control operations

Table 23-1 illustrates the general symbols used in describing the instructions.

The dsPIC33F instruction set summary in Table 23-2 provides all the instructions, along with the status flags affected by each instruction.

Most word or byte-oriented W register instructions (including barrel shift instructions) have three operands:

- The first source operand which is typically a register 'Wb' without any address modifier
- The second source operand which is typically a register 'Ws' with or without an address modifier
- The destination of the result which is typically a register 'Wd' with or without an address modifier

However, word or byte-oriented file register instructions have two operands:

- The file register specified by the value 'f'
- The destination, which could either be the file register 'f' or the W0 register, which is denoted as 'WREG'

Most bit-oriented instructions (including simple rotate/shift instructions) have two operands:

- The W register (with or without an address modifier) or file register (specified by the value of 'Ws' or 'f')
- The bit in the W register or file register (specified by a literal value or indirectly by the contents of register 'Wb')

The literal instructions that involve data movement may use some of the following operands:

- A literal value to be loaded into a W register or file register (specified by the value of 'k')
- The W register or file register where the literal value is to be loaded (specified by 'Wb' or 'f')

However, literal instructions that involve arithmetic or logical operations use some of the following operands:

- The first source operand which is a register 'Wb' without any address modifier
- The second source operand which is a literal value
- The destination of the result (only if not the same as the first source operand) which is typically a register 'Wd' with or without an address modifier

The MAC class of DSP instructions may use some of the following operands:

- The accumulator (A or B) to be used (required operand)
- The W registers to be used as the two operands
- The X and Y address space prefetch operations
- The X and Y address space prefetch destinations
- The accumulator write back destination

The other DSP instructions do not involve any multiplication and may include:

- The accumulator to be used (required)
- The source or destination operand (designated as Wso or Wdo, respectively) with or without an address modifier
- The amount of shift specified by a W register 'Wn' or a literal value

The control instructions may use some of the following operands:

- A program memory address
- The mode of the table read and table write instructions

All instructions are a single word, except for certain double-word instructions, which were made double-word instructions so that all the required information is available in these 48 bits. In the second word, the 8 MSbs are '0's. If this second word is executed as an instruction (by itself), it will execute as a NOP.

Most single-word instructions are executed in a single instruction cycle, unless a conditional test is true, or the program counter is changed as a result of the instruction. In these cases, the execution takes two instruction cycles with the additional instruction cycle(s) executed as a NOP. Notable exceptions are the BRA (unconditional/computed branch), indirect CALL/GOTO, all table reads and writes and RETURN/RETFIE instructions, which are single-word instructions but take two or three cycles. Certain instructions that involve skipping over the subsequent instruction require either two or three cycles if the skip is performed, depending on whether the instruction being skipped is a single-word or two-word instruction. Moreover, double-word moves require two cycles. The double-word instructions execute in two instruction cycles.

Note: For more details on the instruction set, refer to the *"16-bit MCU and DSC Programmer's Reference Manual"* (DS70157).

TABLE 23-1: SYMBOLS USED IN OPCODE DESCRIPTIONS

Field	Description
#text	Means literal defined by "text"
(text)	Means "content of text"
[text]	Means "the location addressed by text"
{ }	Optional field or operation
<n:m>	Register bit field
.b	Byte mode selection
.d	Double-Word mode selection
.S	Shadow register select
.w	Word mode selection (default)
Acc	One of two accumulators {A, B}
AWB	Accumulator write back destination address register ∈ {W13, [W13]+ = 2}
bit4	4-bit bit selection field (used in word addressed instructions) ∈ {0...15}
C, DC, N, OV, Z	MCU Status bits: Carry, Digit Carry, Negative, Overflow, Sticky Zero
Expr	Absolute address, label or expression (resolved by the linker)
f	File register address ∈ {0x0000...0x1FFF}
lit1	1-bit unsigned literal ∈ {0,1}
lit4	4-bit unsigned literal ∈ {0...15}
lit5	5-bit unsigned literal ∈ {0...31}
lit8	8-bit unsigned literal ∈ {0...255}
lit10	10-bit unsigned literal ∈ {0...255} for Byte mode, {0:1023} for Word mode
lit14	14-bit unsigned literal ∈ {0...16384}
lit16	16-bit unsigned literal ∈ {0...65535}
lit23	23-bit unsigned literal ∈ {0...8388608}; LSb must be '0'
None	Field does not require an entry, may be blank
OA, OB, SA, SB	DSP Status bits: AccA Overflow, AccB Overflow, AccA Saturate, AccB Saturate
PC	Program Counter
Slit10	10-bit signed literal ∈ {-512...511}
Slit16	16-bit signed literal ∈ {-32768...32767}
Slit6	6-bit signed literal ∈ {-16...16}
Wb	Base W register ∈ {W0..W15}
Wd	Destination W register ∈ { Wd, [Wd], [Wd++], [Wd--], [++Wd], [--Wd] }
Wdo	Destination W register ∈ { Wnd, [Wnd], [Wnd++], [Wnd--], [++Wnd], [--Wnd], [Wnd+Wb] }
Wm,Wn	Dividend, Divisor working register pair (direct addressing)

© 2009-2012 Microchip Technology Inc.

TABLE 23-1: SYMBOLS USED IN OPCODE DESCRIPTIONS (CONTINUED)

Field	Description
Wm*Wm	Multiplicand and Multiplier working register pair for Square instructions ∈ {W4 * W4,W5 * W5,W6 * W6,W7 * W7}
Wm*Wn	Multiplicand and Multiplier working register pair for DSP instructions ∈ {W4 * W5,W4 * W6,W4 * W7,W5 * W6,W5 * W7,W6 * W7}
Wn	One of 16 working registers ∈ {W0..W15}
Wnd	One of 16 destination working registers ∈ {W0...W15}
Wns	One of 16 source working registers ∈ {W0...W15}
WREG	W0 (working register used in file register instructions)
Ws	Source W register ∈ { Ws, [Ws], [Ws++], [Ws--], [++Ws], [--Ws] }
Wso	Source W register ∈ { Wns, [Wns], [Wns++], [Wns--], [++Wns], [--Wns], [Wns+Wb] }
Wx	X data space prefetch address register for DSP instructions ∈ {[W8]+ = 6, [W8]+ = 4, [W8]+ = 2, [W8], [W8]- = 6, [W8]- = 4, [W8]- = 2, [W9]+ = 6, [W9]+ = 4, [W9]+ = 2, [W9], [W9]- = 6, [W9]- = 4, [W9]- = 2, [W9 + W12], none}
Wxd	X data space prefetch destination register for DSP instructions ∈ {W4...W7}
Wy	Y data space prefetch address register for DSP instructions ∈ {[W10]+ = 6, [W10]+ = 4, [W10]+ = 2, [W10], [W10]- = 6, [W10]- = 4, [W10]- = 2, [W11]+ = 6, [W11]+ = 4, [W11]+ = 2, [W11], [W11]- = 6, [W11]- = 4, [W11]- = 2, [W11 + W12], none}
Wyd	Y data space prefetch destination register for DSP instructions ∈ {W4...W7}

TABLE 23-2: INSTRUCTION SET OVERVIEW

Base Instr #	Assembly Mnemonic	Assembly Syntax		Description	# of Words	# of Cycles	Status Flags Affected
1	ADD	ADD	Acc	Add Accumulators	1	1	OA,OB,SA,SB
		ADD	f	f = f + WREG	1	1	C,DC,N,OV,Z
		ADD	f,WREG	WREG = f + WREG	1	1	C,DC,N,OV,Z
		ADD	#lit10,Wn	Wd = lit10 + Wd	1	1	C,DC,N,OV,Z
		ADD	Wb,Ws,Wd	Wd = Wb + Ws	1	1	C,DC,N,OV,Z
		ADD	Wb,#lit5,Wd	Wd = Wb + lit5	1	1	C,DC,N,OV,Z
		ADD	Wso,#Slit4,Acc	16-bit Signed Add to Accumulator	1	1	OA,OB,SA,SB
2	ADDC	ADDC	f	f = f + WREG + (C)	1	1	C,DC,N,OV,Z
		ADDC	f,WREG	WREG = f + WREG + (C)	1	1	C,DC,N,OV,Z
		ADDC	#lit10,Wn	Wd = lit10 + Wd + (C)	1	1	C,DC,N,OV,Z
		ADDC	Wb,Ws,Wd	Wd = Wb + Ws + (C)	1	1	C,DC,N,OV,Z
		ADDC	Wb,#lit5,Wd	Wd = Wb + lit5 + (C)	1	1	C,DC,N,OV,Z
3	AND	AND	f	f = f .AND. WREG	1	1	N,Z
		AND	f,WREG	WREG = f .AND. WREG	1	1	N,Z
		AND	#lit10,Wn	Wd = lit10 .AND. Wd	1	1	N,Z
		AND	Wb,Ws,Wd	Wd = Wb .AND. Ws	1	1	N,Z
		AND	Wb,#lit5,Wd	Wd = Wb .AND. lit5	1	1	N,Z
4	ASR	ASR	f	f = Arithmetic Right Shift f	1	1	C,N,OV,Z
		ASR	f,WREG	WREG = Arithmetic Right Shift f	1	1	C,N,OV,Z
		ASR	Ws,Wd	Wd = Arithmetic Right Shift Ws	1	1	C,N,OV,Z
		ASR	Wb,Wns,Wnd	Wnd = Arithmetic Right Shift Wb by Wns	1	1	N,Z
		ASR	Wb,#lit5,Wnd	Wnd = Arithmetic Right Shift Wb by lit5	1	1	N,Z
5	BCLR	BCLR	f,#bit4	Bit Clear f	1	1	None
		BCLR	Ws,#bit4	Bit Clear Ws	1	1	None
6	BRA	BRA	C,Expr	Branch if Carry	1	1 (2)	None
		BRA	GE,Expr	Branch if greater than or equal	1	1 (2)	None
		BRA	GEU,Expr	Branch if unsigned greater than or equal	1	1 (2)	None
		BRA	GT,Expr	Branch if greater than	1	1 (2)	None
		BRA	GTU,Expr	Branch if unsigned greater than	1	1 (2)	None
		BRA	LE,Expr	Branch if less than or equal	1	1 (2)	None
		BRA	LEU,Expr	Branch if unsigned less than or equal	1	1 (2)	None
		BRA	LT,Expr	Branch if less than	1	1 (2)	None
		BRA	LTU,Expr	Branch if unsigned less than	1	1 (2)	None
		BRA	N,Expr	Branch if Negative	1	1 (2)	None
		BRA	NC,Expr	Branch if Not Carry	1	1 (2)	None
		BRA	NN,Expr	Branch if Not Negative	1	1 (2)	None
		BRA	NOV,Expr	Branch if Not Overflow	1	1 (2)	None
		BRA	NZ,Expr	Branch if Not Zero	1	1 (2)	None
		BRA	OA,Expr	Branch if Accumulator A overflow	1	1 (2)	None
		BRA	OB,Expr	Branch if Accumulator B overflow	1	1 (2)	None
		BRA	OV,Expr	Branch if Overflow	1	1 (2)	None
		BRA	SA,Expr	Branch if Accumulator A saturated	1	1 (2)	None
		BRA	SB,Expr	Branch if Accumulator B saturated	1	1 (2)	None
		BRA	Expr	Branch Unconditionally	1	2	None
		BRA	Z,Expr	Branch if Zero	1	1 (2)	None
		BRA	Wn	Computed Branch	1	2	None
7	BSET	BSET	f,#bit4	Bit Set f	1	1	None
		BSET	Ws,#bit4	Bit Set Ws	1	1	None
8	BSW	BSW.C	Ws,Wb	Write C bit to Ws<Wb>	1	1	None
		BSW.Z	Ws,Wb	Write Z bit to Ws<Wb>	1	1	None
9	BTG	BTG	f,#bit4	Bit Toggle f	1	1	None
		BTG	Ws,#bit4	Bit Toggle Ws	1	1	None

© 2009-2012 Microchip Technology Inc.

TABLE 23-2: INSTRUCTION SET OVERVIEW (CONTINUED)

Base Instr #	Assembly Mnemonic	Assembly Syntax		Description	# of Words	# of Cycles	Status Flags Affected
10	BTSC	BTSC	f,#bit4	Bit Test f, Skip if Clear	1	1 (2 or 3)	None
		BTSC	Ws,#bit4	Bit Test Ws, Skip if Clear	1	1 (2 or 3)	None
11	BTSS	BTSS	f,#bit4	Bit Test f, Skip if Set	1	1 (2 or 3)	None
		BTSS	Ws,#bit4	Bit Test Ws, Skip if Set	1	1 (2 or 3)	None
12	BTST	BTST	f,#bit4	Bit Test f	1	1	Z
		BTST.C	Ws,#bit4	Bit Test Ws to C	1	1	C
		BTST.Z	Ws,#bit4	Bit Test Ws to Z	1	1	Z
		BTST.C	Ws,Wb	Bit Test Ws<Wb> to C	1	1	C
		BTST.Z	Ws,Wb	Bit Test Ws<Wb> to Z	1	1	Z
13	BTSTS	BTSTS	f,#bit4	Bit Test then Set f	1	1	Z
		BTSTS.C	Ws,#bit4	Bit Test Ws to C, then Set	1	1	C
		BTSTS.Z	Ws,#bit4	Bit Test Ws to Z, then Set	1	1	Z
14	CALL	CALL	lit23	Call subroutine	2	2	None
		CALL	Wn	Call indirect subroutine	1	2	None
15	CLR	CLR	f	f = 0x0000	1	1	None
		CLR	WREG	WREG = 0x0000	1	1	None
		CLR	Ws	Ws = 0x0000	1	1	None
		CLR	Acc,Wx,Wxd,Wy,Wyd,AWB	Clear Accumulator	1	1	OA,OB,SA,SB
16	CLRWDT	CLRWDT		Clear Watchdog Timer	1	1	WDTO,Sleep
17	COM	COM	f	$f = \overline{f}$	1	1	N,Z
		COM	f,WREG	$WREG = \overline{f}$	1	1	N,Z
		COM	Ws,Wd	$Wd = \overline{Ws}$	1	1	N,Z
18	CP	CP	f	Compare f with WREG	1	1	C,DC,N,OV,Z
		CP	Wb,#lit5	Compare Wb with lit5	1	1	C,DC,N,OV,Z
		CP	Wb,Ws	Compare Wb with Ws (Wb – Ws)	1	1	C,DC,N,OV,Z
19	CP0	CP0	f	Compare f with 0x0000	1	1	C,DC,N,OV,Z
		CP0	Ws	Compare Ws with 0x0000	1	1	C,DC,N,OV,Z
20	CPB	CPB	f	Compare f with WREG, with Borrow	1	1	C,DC,N,OV,Z
		CPB	Wb,#lit5	Compare Wb with lit5, with Borrow	1	1	C,DC,N,OV,Z
		CPB	Wb,Ws	Compare Wb with Ws, with Borrow ($Wb - Ws - \overline{C}$)	1	1	C,DC,N,OV,Z
21	CPSEQ	CPSEQ	Wb, Wn	Compare Wb with Wn, skip if =	1	1 (2 or 3)	None
22	CPSGT	CPSGT	Wb, Wn	Compare Wb with Wn, skip if >	1	1 (2 or 3)	None
23	CPSLT	CPSLT	Wb, Wn	Compare Wb with Wn, skip if <	1	1 (2 or 3)	None
24	CPSNE	CPSNE	Wb, Wn	Compare Wb with Wn, skip if ≠	1	1 (2 or 3)	None
25	DAW	DAW	Wn	Wn = decimal adjust Wn	1	1	C
26	DEC	DEC	f	f = f – 1	1	1	C,DC,N,OV,Z
		DEC	f,WREG	WREG = f – 1	1	1	C,DC,N,OV,Z
		DEC	Ws,Wd	Wd = Ws – 1	1	1	C,DC,N,OV,Z
27	DEC2	DEC2	f	f = f – 2	1	1	C,DC,N,OV,Z
		DEC2	f,WREG	WREG = f – 2	1	1	C,DC,N,OV,Z
		DEC2	Ws,Wd	Wd = Ws – 2	1	1	C,DC,N,OV,Z
28	DISI	DISI	#lit14	Disable Interrupts for k instruction cycles	1	1	None

TABLE 23-2: INSTRUCTION SET OVERVIEW (CONTINUED)

Base Instr #	Assembly Mnemonic	Assembly Syntax		Description	# of Words	# of Cycles	Status Flags Affected
29	DIV	DIV.S	Wm,Wn	Signed 16/16-bit Integer Divide	1	18	N,Z,C,OV
		DIV.SD	Wm,Wn	Signed 32/16-bit Integer Divide	1	18	N,Z,C,OV
		DIV.U	Wm,Wn	Unsigned 16/16-bit Integer Divide	1	18	N,Z,C,OV
		DIV.UD	Wm,Wn	Unsigned 32/16-bit Integer Divide	1	18	N,Z,C,OV
30	DIVF	DIVF	Wm,Wn	Signed 16/16-bit Fractional Divide	1	18	N,Z,C,OV
31	DO	DO	#lit14,Expr	Do code to PC + Expr, lit14 + 1 times	2	2	None
		DO	Wn,Expr	Do code to PC + Expr, (Wn) + 1 times	2	2	None
32	ED	ED	Wm*Wm,Acc,Wx,Wy,Wxd	Euclidean Distance (no accumulate)	1	1	OA,OB,OAB, SA,SB,SAB
33	EDAC	EDAC	Wm*Wm,Acc,Wx,Wy,Wxd	Euclidean Distance	1	1	OA,OB,OAB, SA,SB,SAB
34	EXCH	EXCH	Wns,Wnd	Swap Wns with Wnd	1	1	None
35	FBCL	FBCL	Ws,Wnd	Find Bit Change from Left (MSb) Side	1	1	C
36	FF1L	FF1L	Ws,Wnd	Find First One from Left (MSb) Side	1	1	C
37	FF1R	FF1R	Ws,Wnd	Find First One from Right (LSb) Side	1	1	C
38	GOTO	GOTO	Expr	Go to address	2	2	None
		GOTO	Wn	Go to indirect	1	2	None
39	INC	INC	f	f = f + 1	1	1	C,DC,N,OV,Z
		INC	f,WREG	WREG = f + 1	1	1	C,DC,N,OV,Z
		INC	Ws,Wd	Wd = Ws + 1	1	1	C,DC,N,OV,Z
40	INC2	INC2	f	f = f + 2	1	1	C,DC,N,OV,Z
		INC2	f,WREG	WREG = f + 2	1	1	C,DC,N,OV,Z
		INC2	Ws,Wd	Wd = Ws + 2	1	1	C,DC,N,OV,Z
41	IOR	IOR	f	f = f .IOR. WREG	1	1	N,Z
		IOR	f,WREG	WREG = f .IOR. WREG	1	1	N,Z
		IOR	#lit10,Wn	Wd = lit10 .IOR. Wd	1	1	N,Z
		IOR	Wb,Ws,Wd	Wd = Wb .IOR. Ws	1	1	N,Z
		IOR	Wb,#lit5,Wd	Wd = Wb .IOR. lit5	1	1	N,Z
42	LAC	LAC	Wso,#Slit4,Acc	Load Accumulator	1	1	OA,OB,OAB, SA,SB,SAB
43	LNK	LNK	#lit14	Link Frame Pointer	1	1	None
44	LSR	LSR	f	f = Logical Right Shift f	1	1	C,N,OV,Z
		LSR	f,WREG	WREG = Logical Right Shift f	1	1	C,N,OV,Z
		LSR	Ws,Wd	Wd = Logical Right Shift Ws	1	1	C,N,OV,Z
		LSR	Wb,Wns,Wnd	Wnd = Logical Right Shift Wb by Wns	1	1	N,Z
		LSR	Wb,#lit5,Wnd	Wnd = Logical Right Shift Wb by lit5	1	1	N,Z
45	MAC	MAC	Wm*Wn,Acc,Wx,Wxd,Wy,Wyd , AWB	Multiply and Accumulate	1	1	OA,OB,OAB, SA,SB,SAB
		MAC	Wm*Wm,Acc,Wx,Wxd,Wy,Wyd	Square and Accumulate	1	1	OA,OB,OAB, SA,SB,SAB
46	MOV	MOV	f,Wn	Move f to Wn	1	1	None
		MOV	f	Move f to f	1	1	None
		MOV	f,WREG	Move f to WREG	1	1	N,Z
		MOV	#lit16,Wn	Move 16-bit literal to Wn	1	1	None
		MOV.b	#lit8,Wn	Move 8-bit literal to Wn	1	1	None
		MOV	Wn,f	Move Wn to f	1	1	None
		MOV	Wso,Wdo	Move Ws to Wd	1	1	None
		MOV	WREG,f	Move WREG to f	1	1	None
		MOV.D	Wns,Wd	Move Double from W(ns):W(ns + 1) to Wd	1	2	None
		MOV.D	Ws,Wnd	Move Double from Ws to W(nd + 1):W(nd)	1	2	None
47	MOVSAC	MOVSAC	Acc,Wx,Wxd,Wy,Wyd,AWB	Prefetch and store accumulator	1	1	None

© 2009-2012 Microchip Technology Inc.

TABLE 23-2: INSTRUCTION SET OVERVIEW (CONTINUED)

Base Instr #	Assembly Mnemonic	Assembly Syntax	Description	# of Words	# of Cycles	Status Flags Affected
48	MPY	MPY Wm*Wn,Acc,Wx,Wxd,Wy,Wyd	Multiply Wm by Wn to Accumulator	1	1	OA,OB,OAB, SA,SB,SAB
		MPY Wm*Wm,Acc,Wx,Wxd,Wy,Wyd	Square Wm to Accumulator	1	1	OA,OB,OAB, SA,SB,SAB
49	MPY.N	MPY.N Wm*Wn,Acc,Wx,Wxd,Wy,Wyd	-(Multiply Wm by Wn) to Accumulator	1	1	None
50	MSC	MSC Wm*Wm,Acc,Wx,Wxd,Wy,Wyd, AWB	Multiply and Subtract from Accumulator	1	1	OA,OB,OAB, SA,SB,SAB
51	MUL	MUL.SS Wb,Ws,Wnd	{Wnd + 1, Wnd} = signed(Wb) * signed(Ws)	1	1	None
		MUL.SU Wb,Ws,Wnd	{Wnd + 1, Wnd} = signed(Wb) * unsigned(Ws)	1	1	None
		MUL.US Wb,Ws,Wnd	{Wnd + 1, Wnd} = unsigned(Wb) * signed(Ws)	1	1	None
		MUL.UU Wb,Ws,Wnd	{Wnd + 1, Wnd} = unsigned(Wb) * unsigned(Ws)	1	1	None
		MUL.SU Wb,#lit5,Wnd	{Wnd + 1, Wnd} = signed(Wb) * unsigned(lit5)	1	1	None
		MUL.UU Wb,#lit5,Wnd	{Wnd + 1, Wnd} = unsigned(Wb) * unsigned(lit5)	1	1	None
		MUL f	W3:W2 = f * WREG	1	1	None
52	NEG	NEG Acc	Negate Accumulator	1	1	OA,OB,OAB, SA,SB,SAB
		NEG f	f = $\overline{f}$ + 1	1	1	C,DC,N,OV,Z
		NEG f,WREG	WREG = $\overline{f}$ + 1	1	1	C,DC,N,OV,Z
		NEG Ws,Wd	Wd = $\overline{Ws}$ + 1	1	1	C,DC,N,OV,Z
53	NOP	NOP	No Operation	1	1	None
		NOPR	No Operation	1	1	None
54	POP	POP f	Pop f from Top-of-Stack (TOS)	1	1	None
		POP Wdo	Pop from Top-of-Stack (TOS) to Wdo	1	1	None
		POP.D Wnd	Pop from Top-of-Stack (TOS) to W(nd):W(nd + 1)	1	2	None
		POP.S	Pop Shadow Registers	1	1	All
55	PUSH	PUSH f	Push f to Top-of-Stack (TOS)	1	1	None
		PUSH Wso	Push Wso to Top-of-Stack (TOS)	1	1	None
		PUSH.D Wns	Push W(ns):W(ns + 1) to Top-of-Stack (TOS)	1	2	None
		PUSH.S	Push Shadow Registers	1	1	None
56	PWRSAV	PWRSAV #lit1	Go into Sleep or Idle mode	1	1	WDTO,Sleep
57	RCALL	RCALL Expr	Relative Call	1	2	None
		RCALL Wn	Computed Call	1	2	None
58	REPEAT	REPEAT #lit14	Repeat Next Instruction lit14 + 1 times	1	1	None
		REPEAT Wn	Repeat Next Instruction (Wn) + 1 times	1	1	None
59	RESET	RESET	Software device Reset	1	1	None
60	RETFIE	RETFIE	Return from interrupt	1	3 (2)	None
61	RETLW	RETLW #lit10,Wn	Return with literal in Wn	1	3 (2)	None
62	RETURN	RETURN	Return from Subroutine	1	3 (2)	None
63	RLC	RLC f	f = Rotate Left through Carry f	1	1	C,N,Z
		RLC f,WREG	WREG = Rotate Left through Carry f	1	1	C,N,Z
		RLC Ws,Wd	Wd = Rotate Left through Carry Ws	1	1	C,N,Z
64	RLNC	RLNC f	f = Rotate Left (No Carry) f	1	1	N,Z
		RLNC f,WREG	WREG = Rotate Left (No Carry) f	1	1	N,Z
		RLNC Ws,Wd	Wd = Rotate Left (No Carry) Ws	1	1	N,Z
65	RRC	RRC f	f = Rotate Right through Carry f	1	1	C,N,Z
		RRC f,WREG	WREG = Rotate Right through Carry f	1	1	C,N,Z
		RRC Ws,Wd	Wd = Rotate Right through Carry Ws	1	1	C,N,Z

TABLE 23-2: INSTRUCTION SET OVERVIEW (CONTINUED)

Base Instr #	Assembly Mnemonic	Assembly Syntax		Description	# of Words	# of Cycles	Status Flags Affected
66	RRNC	RRNC	f	f = Rotate Right (No Carry) f	1	1	N,Z
		RRNC	f,WREG	WREG = Rotate Right (No Carry) f	1	1	N,Z
		RRNC	Ws,Wd	Wd = Rotate Right (No Carry) Ws	1	1	N,Z
67	SAC	SAC	Acc,#Slit4,Wdo	Store Accumulator	1	1	None
		SAC.R	Acc,#Slit4,Wdo	Store Rounded Accumulator	1	1	None
68	SE	SE	Ws,Wnd	Wnd = sign-extended Ws	1	1	C,N,Z
69	SETM	SETM	f	f = 0xFFFF	1	1	None
		SETM	WREG	WREG = 0xFFFF	1	1	None
		SETM	Ws	Ws = 0xFFFF	1	1	None
70	SFTAC	SFTAC	Acc,Wn	Arithmetic Shift Accumulator by (Wn)	1	1	OA,OB,OAB, SA,SB,SAB
		SFTAC	Acc,#Slit6	Arithmetic Shift Accumulator by Slit6	1	1	OA,OB,OAB, SA,SB,SAB
71	SL	SL	f	f = Left Shift f	1	1	C,N,OV,Z
		SL	f,WREG	WREG = Left Shift f	1	1	C,N,OV,Z
		SL	Ws,Wd	Wd = Left Shift Ws	1	1	C,N,OV,Z
		SL	Wb,Wns,Wnd	Wnd = Left Shift Wb by Wns	1	1	N,Z
		SL	Wb,#lit5,Wnd	Wnd = Left Shift Wb by lit5	1	1	N,Z
72	SUB	SUB	Acc	Subtract Accumulators	1	1	OA,OB,OAB, SA,SB,SAB
		SUB	f	f = f – WREG	1	1	C,DC,N,OV,Z
		SUB	f,WREG	WREG = f – WREG	1	1	C,DC,N,OV,Z
		SUB	#lit10,Wn	Wn = Wn – lit10	1	1	C,DC,N,OV,Z
		SUB	Wb,Ws,Wd	Wd = Wb – Ws	1	1	C,DC,N,OV,Z
		SUB	Wb,#lit5,Wd	Wd = Wb – lit5	1	1	C,DC,N,OV,Z
73	SUBB	SUBB	f	f = f – WREG – ($\overline{C}$)	1	1	C,DC,N,OV,Z
		SUBB	f,WREG	WREG = f – WREG – ($\overline{C}$)	1	1	C,DC,N,OV,Z
		SUBB	#lit10,Wn	Wn = Wn – lit10 – ($\overline{C}$)	1	1	C,DC,N,OV,Z
		SUBB	Wb,Ws,Wd	Wd = Wb – Ws – ($\overline{C}$)	1	1	C,DC,N,OV,Z
		SUBB	Wb,#lit5,Wd	Wd = Wb – lit5 – ($\overline{C}$)	1	1	C,DC,N,OV,Z
74	SUBR	SUBR	f	f = WREG – f	1	1	C,DC,N,OV,Z
		SUBR	f,WREG	WREG = WREG – f	1	1	C,DC,N,OV,Z
		SUBR	Wb,Ws,Wd	Wd = Ws – Wb	1	1	C,DC,N,OV,Z
		SUBR	Wb,#lit5,Wd	Wd = lit5 – Wb	1	1	C,DC,N,OV,Z
75	SUBBR	SUBBR	f	f = WREG – f – ($\overline{C}$)	1	1	C,DC,N,OV,Z
		SUBBR	f,WREG	WREG = WREG – f – ($\overline{C}$)	1	1	C,DC,N,OV,Z
		SUBBR	Wb,Ws,Wd	Wd = Ws – Wb – ($\overline{C}$)	1	1	C,DC,N,OV,Z
		SUBBR	Wb,#lit5,Wd	Wd = lit5 – Wb – ($\overline{C}$)	1	1	C,DC,N,OV,Z
76	SWAP	SWAP.b	Wn	Wn = nibble swap Wn	1	1	None
		SWAP	Wn	Wn = byte swap Wn	1	1	None
77	TBLRDH	TBLRDH	Ws,Wd	Read Prog<23:16> to Wd<7:0>	1	2	None
78	TBLRDL	TBLRDL	Ws,Wd	Read Prog<15:0> to Wd	1	2	None
79	TBLWTH	TBLWTH	Ws,Wd	Write Ws<7:0> to Prog<23:16>	1	2	None
80	TBLWTL	TBLWTL	Ws,Wd	Write Ws to Prog<15:0>	1	2	None
81	ULNK	ULNK		Unlink Frame Pointer	1	1	None
82	XOR	XOR	f	f = f .XOR. WREG	1	1	N,Z
		XOR	f,WREG	WREG = f .XOR. WREG	1	1	N,Z
		XOR	#lit10,Wn	Wd = lit10 .XOR. Wd	1	1	N,Z
		XOR	Wb,Ws,Wd	Wd = Wb .XOR. Ws	1	1	N,Z
		XOR	Wb,#lit5,Wd	Wd = Wb .XOR. lit5	1	1	N,Z
83	ZE	ZE	Ws,Wnd	Wnd = Zero-extend Ws	1	1	C,Z,N

© 2009-2012 Microchip Technology Inc.

24.0 DEVELOPMENT SUPPORT

The PIC® microcontrollers and dsPIC® digital signal controllers are supported with a full range of software and hardware development tools:

- Integrated Development Environment
  - MPLAB® IDE Software
- Compilers/Assemblers/Linkers
  - MPLAB C Compiler for Various Device Families
  - HI-TECH C® for Various Device Families
  - MPASM™ Assembler
  - MPLINK™ Object Linker/ MPLIB™ Object Librarian
  - MPLAB Assembler/Linker/Librarian for Various Device Families
- Simulators
  - MPLAB SIM Software Simulator
- Emulators
  - MPLAB REAL ICE™ In-Circuit Emulator
- In-Circuit Debuggers
  - MPLAB ICD 3
  - PICkit™ 3 Debug Express
- Device Programmers
  - PICkit™ 2 Programmer
  - MPLAB PM3 Device Programmer
- Low-Cost Demonstration/Development Boards, Evaluation Kits, and Starter Kits

24.1 MPLAB Integrated Development Environment Software

The MPLAB IDE software brings an ease of software development previously unseen in the 8/16/32-bit microcontroller market. The MPLAB IDE is a Windows® operating system-based application that contains:

- A single graphical interface to all debugging tools
  - Simulator
  - Programmer (sold separately)
  - In-Circuit Emulator (sold separately)
  - In-Circuit Debugger (sold separately)
- A full-featured editor with color-coded context
- A multiple project manager
- Customizable data windows with direct edit of contents
- High-level source code debugging
- Mouse over variable inspection
- Drag and drop variables from source to watch windows
- Extensive on-line help
- Integration of select third party tools, such as IAR C Compilers

The MPLAB IDE allows you to:

- Edit your source files (either C or assembly)
- One-touch compile or assemble, and download to emulator and simulator tools (automatically updates all project information)
- Debug using:
  - Source files (C or assembly)
  - Mixed C and assembly
  - Machine code

MPLAB IDE supports multiple debugging tools in a single development paradigm, from the cost-effective simulators, through low-cost in-circuit debuggers, to full-featured emulators. This eliminates the learning curve when upgrading to tools with increased flexibility and power.

24.2 MPLAB C Compilers for Various Device Families

The MPLAB C Compiler code development systems are complete ANSI C compilers for Microchip's PIC18, PIC24 and PIC32 families of microcontrollers and the dsPIC30 and dsPIC33 families of digital signal controllers. These compilers provide powerful integration capabilities, superior code optimization and ease of use.

For easy source level debugging, the compilers provide symbol information that is optimized to the MPLAB IDE debugger.

24.3 HI-TECH C for Various Device Families

The HI-TECH C Compiler code development systems are complete ANSI C compilers for Microchip's PIC family of microcontrollers and the dsPIC family of digital signal controllers. These compilers provide powerful integration capabilities, omniscient code generation and ease of use.

For easy source level debugging, the compilers provide symbol information that is optimized to the MPLAB IDE debugger.

The compilers include a macro assembler, linker, preprocessor, and one-step driver, and can run on multiple platforms.

24.4 MPASM Assembler

The MPASM Assembler is a full-featured, universal macro assembler for PIC10/12/16/18 MCUs.

The MPASM Assembler generates relocatable object files for the MPLINK Object Linker, Intel® standard HEX files, MAP files to detail memory usage and symbol reference, absolute LST files that contain source lines and generated machine code and COFF files for debugging.

The MPASM Assembler features include:

- Integration into MPLAB IDE projects
- User-defined macros to streamline assembly code
- Conditional assembly for multi-purpose source files
- Directives that allow complete control over the assembly process

24.5 MPLINK Object Linker/ MPLIB Object Librarian

The MPLINK Object Linker combines relocatable objects created by the MPASM Assembler and the MPLAB C18 C Compiler. It can link relocatable objects from precompiled libraries, using directives from a linker script.

The MPLIB Object Librarian manages the creation and modification of library files of precompiled code. When a routine from a library is called from a source file, only the modules that contain that routine will be linked in with the application. This allows large libraries to be used efficiently in many different applications.

The object linker/library features include:

- Efficient linking of single libraries instead of many smaller files
- Enhanced code maintainability by grouping related modules together
- Flexible creation of libraries with easy module listing, replacement, deletion and extraction

24.6 MPLAB Assembler, Linker and Librarian for Various Device Families

MPLAB Assembler produces relocatable machine code from symbolic assembly language for PIC24, PIC32 and dsPIC devices. MPLAB C Compiler uses the assembler to produce its object file. The assembler generates relocatable object files that can then be archived or linked with other relocatable object files and archives to create an executable file. Notable features of the assembler include:

- Support for the entire device instruction set
- Support for fixed-point and floating-point data
- Command line interface
- Rich directive set
- Flexible macro language
- MPLAB IDE compatibility

© 2009-2012 Microchip Technology Inc.

24.7 MPLAB SIM Software Simulator

The MPLAB SIM Software Simulator allows code development in a PC-hosted environment by simulating the PIC MCUs and dsPIC® DSCs on an instruction level. On any given instruction, the data areas can be examined or modified and stimuli can be applied from a comprehensive stimulus controller. Registers can be logged to files for further run-time analysis. The trace buffer and logic analyzer display extend the power of the simulator to record and track program execution, actions on I/O, most peripherals and internal registers.

The MPLAB SIM Software Simulator fully supports symbolic debugging using the MPLAB C Compilers, and the MPASM and MPLAB Assemblers. The software simulator offers the flexibility to develop and debug code outside of the hardware laboratory environment, making it an excellent, economical software development tool.

24.8 MPLAB REAL ICE In-Circuit Emulator System

MPLAB REAL ICE In-Circuit Emulator System is Microchip's next generation high-speed emulator for Microchip Flash DSC and MCU devices. It debugs and programs PIC® Flash MCUs and dsPIC® Flash DSCs with the easy-to-use, powerful graphical user interface of the MPLAB Integrated Development Environment (IDE), included with each kit.

The emulator is connected to the design engineer's PC using a high-speed USB 2.0 interface and is connected to the target with either a connector compatible with in-circuit debugger systems (RJ11) or with the new high-speed, noise tolerant, Low-Voltage Differential Signal (LVDS) interconnection (CAT5).

The emulator is field upgradable through future firmware downloads in MPLAB IDE. In upcoming releases of MPLAB IDE, new devices will be supported, and new features will be added. MPLAB REAL ICE offers significant advantages over competitive emulators including low-cost, full-speed emulation, run-time variable watches, trace analysis, complex breakpoints, a ruggedized probe interface and long (up to three meters) interconnection cables.

24.9 MPLAB ICD 3 In-Circuit Debugger System

MPLAB ICD 3 In-Circuit Debugger System is Microchip's most cost effective high-speed hardware debugger/programmer for Microchip Flash Digital Signal Controller (DSC) and microcontroller (MCU) devices. It debugs and programs PIC® Flash microcontrollers and dsPIC® DSCs with the powerful, yet easy-to-use graphical user interface of MPLAB Integrated Development Environment (IDE).

The MPLAB ICD 3 In-Circuit Debugger probe is connected to the design engineer's PC using a high-speed USB 2.0 interface and is connected to the target with a connector compatible with the MPLAB ICD 2 or MPLAB REAL ICE systems (RJ-11). MPLAB ICD 3 supports all MPLAB ICD 2 headers.

24.10 PICkit 3 In-Circuit Debugger/ Programmer and PICkit 3 Debug Express

The MPLAB PICkit 3 allows debugging and programming of PIC® and dsPIC® Flash microcontrollers at a most affordable price point using the powerful graphical user interface of the MPLAB Integrated Development Environment (IDE). The MPLAB PICkit 3 is connected to the design engineer's PC using a full speed USB interface and can be connected to the target via an Microchip debug (RJ-11) connector (compatible with MPLAB ICD 3 and MPLAB REAL ICE). The connector uses two device I/O pins and the reset line to implement in-circuit debugging and In-Circuit Serial Programming™.

The PICkit 3 Debug Express include the PICkit 3, demo board and microcontroller, hookup cables and CDROM with user's guide, lessons, tutorial, compiler and MPLAB IDE software.

24.11 PICkit 2 Development Programmer/Debugger and PICkit 2 Debug Express

The PICkit™ 2 Development Programmer/Debugger is a low-cost development tool with an easy to use interface for programming and debugging Microchip's Flash families of microcontrollers. The full featured Windows® programming interface supports baseline (PIC10F, PIC12F5xx, PIC16F5xx), midrange (PIC12F6xx, PIC16F), PIC18F, PIC24, dsPIC30, dsPIC33, and PIC32 families of 8-bit, 16-bit, and 32-bit microcontrollers, and many Microchip Serial EEPROM products. With Microchip's powerful MPLAB Integrated Development Environment (IDE) the PICkit™ 2 enables in-circuit debugging on most PIC® microcontrollers. In-Circuit-Debugging runs, halts and single steps the program while the PIC microcontroller is embedded in the application. When halted at a breakpoint, the file registers can be examined and modified.

The PICkit 2 Debug Express include the PICkit 2, demo board and microcontroller, hookup cables and CDROM with user's guide, lessons, tutorial, compiler and MPLAB IDE software.

24.12 MPLAB PM3 Device Programmer

The MPLAB PM3 Device Programmer is a universal, CE compliant device programmer with programmable voltage verification at V_{DDMIN} and V_{DDMAX} for maximum reliability. It features a large LCD display (128 x 64) for menus and error messages and a modular, detachable socket assembly to support various package types. The ICSP™ cable assembly is included as a standard item. In Stand-Alone mode, the MPLAB PM3 Device Programmer can read, verify and program PIC devices without a PC connection. It can also set code protection in this mode. The MPLAB PM3 connects to the host PC via an RS-232 or USB cable. The MPLAB PM3 has high-speed communications and optimized algorithms for quick programming of large memory devices and incorporates an MMC card for file storage and data applications.

24.13 Demonstration/Development Boards, Evaluation Kits, and Starter Kits

A wide variety of demonstration, development and evaluation boards for various PIC MCUs and dsPIC DSCs allows quick application development on fully functional systems. Most boards include prototyping areas for adding custom circuitry and provide application firmware and source code for examination and modification.

The boards support a variety of features, including LEDs, temperature sensors, switches, speakers, RS-232 interfaces, LCD displays, potentiometers and additional EEPROM memory.

The demonstration and development boards can be used in teaching environments, for prototyping custom circuits and for learning about various microcontroller applications.

In addition to the PICDEM™ and dsPICDEM™ demonstration/development board series of circuits, Microchip has a line of evaluation kits and demonstration software for analog filter design, KEELOQ® security ICs, CAN, IrDA®, PowerSmart battery management, SEEVAL® evaluation system, Sigma-Delta ADC, flow rate sensing, plus many more.

Also available are starter kits that contain everything needed to experience the specified device. This usually includes a single application and debug capability, all on one board.

Check the Microchip web page (www.microchip.com) for the complete list of demonstration, development and evaluation kits.

© 2009-2012 Microchip Technology Inc.

25.0 ELECTRICAL CHARACTERISTICS

This section provides an overview of dsPIC33FJXXXGPX06A/X08A/X10A electrical characteristics. Additional information will be provided in future revisions of this document as it becomes available.

Absolute maximum ratings for the dsPIC33FJXXXGPX06A/X08A/X10A family are listed below. Exposure to these maximum rating conditions for extended periods may affect device reliability. Functional operation of the device at these or any other conditions above the parameters indicated in the operation listings of this specification is not implied.

Absolute Maximum Ratings

(See Note 1)

Ambient temperature under bias ..... -40°C to +125°C
Storage temperature ..... -65°C to +160°C
Voltage on V_{DD} with respect to V_{SS} ..... -0.3V to +4.0V
Voltage on any pin that is not 5V tolerant with respect to V_{SS}(4) ..... -0.3V to (V_{DD} + 0.3V)
Voltage on any 5V tolerant pin with respect to V_{SS} when $V_{DD} \geq 3.0V$(4) ..... -0.3V to +5.6V
Voltage on any 5V tolerant pin with respect to Vss when $V_{DD} < 3.0V$(4) ..... -0.3V to 3.6V
Maximum current out of V_{SS} pin ..... 300 mA
Maximum current into V_{DD} pin(2) ..... 250 mA
Maximum current sourced/sunk by any 2x I/O pin(3) ..... 8 mA
Maximum current sourced/sunk by any 4x I/O pin(3) ..... 15 mA
Maximum current sourced/sunk by any 8x I/O pin(3) ..... 25 mA
Maximum current sunk by all ports ..... 200 mA
Maximum current sourced by all ports(2) ..... 200 mA

Note 1: Stresses above those listed under “Absolute Maximum Ratings” may cause permanent damage to the device. This is a stress rating only and functional operation of the device at those or any other conditions above those indicated in the operation listings of this specification is not implied. Exposure to maximum rating conditions for extended periods may affect device reliability.

2: Maximum allowable current is a function of device maximum power dissipation (see Table 25-2).

3: Exceptions are CLKOUT, which is able to sink/source 25 mA, and the V_{REF}+, V_{REF}-, SCLx, SDAx, PGECx and PGEDx pins, which are able to sink/source 12 mA.

4: See the **“Pin Diagrams”** section for 5V tolerant pins.

25.1 DC Characteristics

TABLE 25-1: OPERATING MIPS VS. VOLTAGE

Characteristic	V_{DD} Range (in Volts)	Temp Range (in °C)	Max MIPS
			dsPIC33FJXXXGPX06A/X08A/X10A
—	V_{BOR}-3.6V(1)	-40°C to +85°C	40
—	V_{BOR}-3.6V(1)	-40°C to +125°C	40

Note 1: Device is functional at $V_{BORMIN} < V_{DD} < V_{DDMIN}$. Analog modules such as the ADC will have degraded performance. Device functionality is tested but not characterized. Refer to parameter BO10 in Table 25-11 for the minimum and maximum BOR values.

TABLE 25-2: THERMAL OPERATING CONDITIONS

Rating	Symbol	Min	Typ	Max	Unit
dsPIC33FJXXXGPX06A/X08A/X10A					
Operating Junction Temperature Range	T_J	-40	—	+125	°C
Operating Ambient Temperature Range	T_A	-40	—	+85	°C
Extended Temperature Devices					
Operating Junction Temperature Range	T_J	-40	—	+150	°C
Operating Ambient Temperature Range	T_A	-40	—	+125	°C
Power Dissipation: Internal chip power dissipation: $P_{INT} = V_{DD} \times (I_{DD} - \Sigma I_{OH})$ I/O Pin Power Dissipation: $I/O = \Sigma (\{V_{DD} - V_{OH}\} \times I_{OH}) + \Sigma (V_{OL} \times I_{OL})$	P_D	$P_{INT} + P_{I/O}$			W
Maximum Allowed Power Dissipation	P_{DMAX}	$(T_J - T_A)/\theta_{JA}$			W

TABLE 25-3: THERMAL PACKAGING CHARACTERISTICS

Characteristic	Symbol	Typ	Max	Unit	Notes
Package Thermal Resistance, 100-pin TQFP (14x14x1 mm)	θ_{JA}	40	—	°C/W	1
Package Thermal Resistance, 100-pin TQFP (12x12x1 mm)	θ_{JA}	40	—	°C/W	1
Package Thermal Resistance, 80-pin TQFP (12x12x1 mm)	θ_{JA}	40	—	°C/W	1
Package Thermal Resistance, 64-pin TQFP (10x10x1 mm)	θ_{JA}	40	—	°C/W	1
Package Thermal Resistance, 64-pin QFN (9x9x0.9 mm)	θ_{JA}	28	—	°C/W	1

Note 1: Junction to ambient thermal resistance, Theta-JA (θ_{JA}) numbers are achieved by package simulations.

© 2009-2012 Microchip Technology Inc.

TABLE 25-4: DC TEMPERATURE AND VOLTAGE SPECIFICATIONS

DC CHARACTERISTICS			Standard Operating Conditions: 3.0V to 3.6V (unless otherwise stated) Operating temperature -40°C ≤ TA ≤ +85°C for Industrial -40°C ≤ TA ≤ +125°C for Extended				
Param No.	**Symbol**	**Characteristic**	**Min**	**Typ(1)**	**Max**	**Units**	**Conditions**
Operating Voltage							
DC10	**Supply Voltage**						
	VDD	—	3.0	—	3.6	V	—
DC12	VDR	**RAM Data Retention Voltage(2)**	1.8	—	—	V	—
DC16	VPOR	**VDD Start Voltage** to ensure internal Power-on Reset signal	—	—	VSS	V	—
DC17	SVDD	**VDD Rise Rate** to ensure internal Power-on Reset signal	0.03	—	—	V/ms	0-3.0V in 0.1s

Note 1: Data in “Typ” column is at 3.3V, 25°C unless otherwise stated.

2: This is the limit to which VDD can be lowered without losing RAM data.

TABLE 25-5: DC CHARACTERISTICS: OPERATING CURRENT (I_{DD})

DC CHARACTERISTICS			Standard Operating Conditions: 3.0V to 3.6V (unless otherwise stated) Operating temperature -40°C ≤ TA ≤ +85°C for Industrial -40°C ≤ TA ≤ +125°C for Extended			
Parameter No.(3)	**Typical(2)**	**Max**	**Units**	**Conditions**		
Operating Current (I_{DD})(1)						
DC20d	27	30	mA	-40°C	3.3V	10 MIPS
DC20a	27	30	mA	+25°C		
DC20b	27	30	mA	+85°C		
DC20c	27	35	mA	+125°C		
DC21d	36	40	mA	-40°C	3.3V	16 MIPS
DC21a	37	40	mA	+25°C		
DC21b	38	45	mA	+85°C		
DC21c	39	45	mA	+125°C		
DC22d	43	50	mA	-40°C	3.3V	20 MIPS
DC22a	46	50	mA	+25°C		
DC22b	46	55	mA	+85°C		
DC22c	47	55	mA	+125°C		
DC23d	65	70	mA	-40°C	3.3V	30 MIPS
DC23a	65	70	mA	+25°C		
DC23b	65	70	mA	+85°C		
DC23c	65	70	mA	+125°C		
DC24d	84	90	mA	-40°C	3.3V	40 MIPS
DC24a	84	90	mA	+25°C		
DC24b	84	90	mA	+85°C		
DC24c	84	90	mA	+125°C		

Note 1: I_{DD} is primarily a function of the operating voltage and frequency. Other factors, such as I/O pin loading and switching rate, oscillator type, internal code execution pattern and temperature, also have an impact on the current consumption. The test conditions for all I_{DD} measurements are as follows:

- Oscillator is configured in EC mode with PLL, OSC1 is driven with external square wave from rail-to-rail (EC clock overshoot/undershoot < 250 mV required)
- CLKO is configured as an I/O input pin in the Configuration word
- All I/O pins are configured as inputs and pulled to V_{SS}
- $\overline{MCLR}$ = V_{DD}, WDT and FSCM are disabled
- CPU, SRAM, program memory and data memory are operational
- No peripheral modules are operating; however, every peripheral is being clocked (defined PMDx bits are set to zero and unimplemented PMDx bits are set to one)
- CPU executing `while(1)` statement
- JTAG is disabled

2: Data in “Typ” column is at 3.3V, +25ºC unless otherwise stated.

3: These parameters are characterized but not tested in manufacturing.

© 2009-2012 Microchip Technology Inc.

TABLE 25-6: DC CHARACTERISTICS: IDLE CURRENT (I_{IDLE})

DC CHARACTERISTICS			Standard Operating Conditions: 3.0V to 3.6V (unless otherwise stated) Operating temperature -40°C ≤ TA ≤ +85°C for Industrial -40°C ≤ TA ≤ +125°C for Extended			
Parameter No.(3)	**Typical(2)**	**Max**	**Units**	**Conditions**		
Idle Current (I_{IDLE}): Core OFF Clock ON Base Current(1)						
DC40d	3	25	mA	-40°C	3.3V	10 MIPS
DC40a	3	25	mA	+25°C		
DC40b	3	25	mA	+85°C		
DC40c	3	25	mA	+125°C		
DC41d	4	25	mA	-40°C	3.3V	16 MIPS
DC41a	5	25	mA	+25°C		
DC41b	6	25	mA	+85°C		
DC41c	6	25	mA	+125°C		
DC42d	8	25	mA	-40°C	3.3V	20 MIPS
DC42a	9	25	mA	+25°C		
DC42b	10	25	mA	+85°C		
DC42c	10	25	mA	+125°C		
DC43a	15	25	mA	+25°C	3.3V	30 MIPS
DC43d	15	25	mA	-40°C		
DC43b	15	25	mA	+85°C		
DC43c	15	25	mA	+125°C		
DC44d	16	25	mA	-40°C	3.3V	40 MIPS
DC44a	16	25	mA	+25°C		
DC44b	16	25	mA	+85°C		
DC44c	16	25	mA	+125°C		

Note 1: Base I_{IDLE} current is measured as follows:
- CPU core is off, oscillator is configured in EC mode and external clock active, OSC1 is driven with external square wave from rail-to-rail (EC clock overshoot/undershoot < 250 mV required)
- CLKO is configured as an I/O input pin in the Configuration word
- All I/O pins are configured as inputs and pulled to V_{SS}
- $\overline{MCLR}$ = V_{DD}, WDT and FSCM are disabled
- No peripheral modules are operating; however, every peripheral is being clocked (defined PMDx bits are set to zero and unimplemented PMDx bits are set to one)
- JTAG is disabled

2: Data in “Typ” column is at 3.3V, +25ºC unless otherwise stated.

3: These parameters are characterized but not tested in manufacturing.

TABLE 25-7: DC CHARACTERISTICS: POWER-DOWN CURRENT (IPD)

DC CHARACTERISTICS			Standard Operating Conditions: 3.0V to 3.6V (unless otherwise stated) Operating temperature -40°C ≤ TA ≤ +85°C for Industrial -40°C ≤ TA ≤ +125°C for Extended			
Parameter No.(3)	**Typical(2)**	**Max**	**Units**	**Conditions**		
Power-Down Current (IPD)(1)						
DC60d	50	200	μA	-40°C	3.3V	Base Power-Down Current(3,4)
DC60a	50	200	μA	+25°C		
DC60b	200	500	μA	+85°C		
DC60c	600	1000	μA	+125°C		
DC61d	8	13	μA	-40°C	3.3V	Watchdog Timer Current: ΔIWDT(3,5)
DC61a	10	15	μA	+25°C		
DC61b	12	20	μA	+85°C		
DC61c	13	25	μA	+125°C		

Note 1: IPD (Sleep) current is measured as follows:

- CPU core is off, oscillator is configured in EC mode and external clock active, OSC1 is driven with external square wave from rail-to-rail (EC clock overshoot/undershoot < 250 mV required)
- CLKO is configured as an I/O input pin in the Configuration word
- All I/O pins are configured as inputs and pulled to VSS
- $\overline{\text{MCLR}}$ = VDD, WDT and FSCM are disabled, all peripheral modules except the ADC are disabled (PMDx bits are all '1's). The following ADC settings are enabled for each ADC module (ADCx) prior to executing the PWRSAV instruction: ADON = 1, VCFG = 1, AD12B = 1 and ADxMD = 0.
- VREGS bit (RCON<8>) = 0 (i.e., core regulator is set to stand-by while the device is in Sleep mode)
- RTCC is disabled.
- JTAG is disabled

2: Data in the "Typ" column is at 3.3V, +25ºC unless otherwise stated.

3: The Watchdog Timer Current is the additional current consumed when the WDT module is enabled. This current should be added to the base IPD current.

4: These currents are measured on the device containing the most memory in this family.

5: These parameters are characterized, but are not tested in manufacturing.

© 2009-2012 Microchip Technology Inc.

TABLE 25-8: DC CHARACTERISTICS: DOZE CURRENT (I_{DOZE})

DC CHARACTERISTICS			Standard Operating Conditions: 3.0V to 3.6V (unless otherwise stated) Operating temperature -40°C ≤ TA ≤ +85°C for Industrial -40°C ≤ TA ≤ +125°C for Extended				
Parameter No.	**Typical(2)**	**Max**	**Doze Ratio**	**Units**	**Conditions**		
Doze Current (I_{DOZE})(1)							
DC73a	11	35	1:2	mA	-40°C	3.3V	40 MIPS
DC73f	11	30	1:64	mA			
DC73g	11	30	1:128	mA			
DC70a	42	50	1:2	mA	+25°C	3.3V	40 MIPS
DC70f	26	30	1:64	mA			
DC70g	25	30	1:128	mA			
DC71a	41	50	1:2	mA	+85°C	3.3V	40 MIPS
DC71f	25	30	1:64	mA			
DC71g	24	30	1:128	mA			
DC72a	42	50	1:2	mA	+125°C	3.3V	40 MIPS
DC72f	26	30	1:64	mA			
DC72g	25	30	1:128	mA			

Note 1: I_{DOZE} is primarily a function of the operating voltage and frequency. Other factors, such as I/O pin loading and switching rate, oscillator type, internal code execution pattern and temperature, also have an impact on the current consumption. The test conditions for all I_{DOZE} measurements are as follows:

- Oscillator is configured in EC mode and external clock active, OSC1 is driven with external square wave from rail-to-rail with overshoot/undershoot < 250 mV
- CLKO is configured as an I/O input pin in the Configuration word
- All I/O pins are configured as inputs and pulled to V_{SS}
- $\overline{MCLR}$ = V_{DD}, WDT and FSCM are disabled
- CPU, SRAM, program memory and data memory are operational
- No peripheral modules are operating; however, every peripheral is being clocked (defined PMDx bits are set to zero and unimplemented PMDx bits are set to one)
- CPU executing `while(1)` statement
- JTAG is disabled

2: Data in the “Typ” column is at 3.3V, +25ºC unless otherwise stated.

TABLE 25-9: DC CHARACTERISTICS: I/O PIN INPUT SPECIFICATIONS

DC CHARACTERISTICS			Standard Operating Conditions: 3.0V to 3.6V (unless otherwise stated) Operating temperature -40°C ≤ TA ≤ +85°C for Industrial -40°C ≤ TA ≤ +125°C for Extended				
Param No.	**Symbol**	**Characteristic**	**Min**	**Typ(1)**	**Max**	**Units**	**Conditions**
	VIL	**Input Low Voltage**					
DI10		I/O pins	VSS	—	0.2 VDD	V	
DI15		$\overline{\text{MCLR}}$	VSS	—	0.2 VDD	V	
DI16		I/O Pins with OSC1 or SOSCI	VSS	—	0.2 VDD	V	
DI18		I/O Pins with I²C	VSS	—	0.3 VDD	V	SMBus disabled
DI19		I/O Pins with I²C	VSS	—	0.8 V	V	SMBus enabled
	VIH	**Input High Voltage**					
DI20		I/O Pins Not 5V Tolerant(4) I/O Pins 5V Tolerant(4)	0.7 VDD 0.7 VDD	— —	VDD 5.5	V V	
DI28		SDAx, SCLx	0.7 VDD	—	5.5	V	SMBus disabled
DI29		SDAx, SCLx	2.1	—	5.5	V	SMBus enabled
	ICNPU	**CNx Pull-up Current**					
DI30			50	250	400	μA	VDD = 3.3V, VPIN = VSS
	IIL	**Input Leakage Current(2,3)**					
DI50		I/O Pins 5V Tolerant(4)	—	—	±2	μA	VSS ≤ VPIN ≤ VDD, Pin at high-impedance
DI51		I/O Pins Not 5V Tolerant(4)	—	—	±1	μA	VSS ≤ VPIN ≤ VDD, Pin at high-impedance, -40°C ≤ TA ≤ +85°C
DI51a		I/O Pins Not 5V Tolerant(4)	—	—	±2	μA	Shared with external reference pins, -40°C ≤ TA ≤ +85°C
DI51b		I/O Pins Not 5V Tolerant(4)	—	—	±3.5	μA	VSS ≤ VPIN ≤ VDD, Pin at high-impedance, -40°C ≤ TA ≤ +125°C
DI51c		I/O Pins Not 5V Tolerant(4)	—	—	±8	μA	Analog pins shared with external reference pins, -40°C ≤ TA ≤ +125°C
DI55		$\overline{\text{MCLR}}$	—	—	±2	μA	VSS ≤ VPIN ≤ VDD
DI56		OSC1	—	—	±2	μA	VSS ≤ VPIN ≤ VDD, XT and HS modes

Note 1: Data in "Typ" column is at 3.3V, 25°C unless otherwise stated.

2: The leakage current on the $\overline{\text{MCLR}}$ pin is strongly dependent on the applied voltage level. The specified levels represent normal operating conditions. Higher leakage current may be measured at different input voltages.

3: Negative current is defined as current sourced by the pin.

4: See **"Pin Diagrams"** for a list of 5V tolerant pins.

5: VIL source < (VSS – 0.3). Characterized but not tested.

6: Non-5V tolerant pins VIH source > (VDD + 0.3), 5V tolerant pins VIH source > 5.5V. Characterized but not tested.

7: Digital 5V tolerant pins cannot tolerate any "positive" input injection current from input sources > 5.5V.

8: Injection currents > | 0 | can affect the ADC results by approximately 4-6 counts.

9: Any number and/or combination of I/O pins not excluded under IICL or IICH conditions are permitted provided the mathematical "absolute instantaneous" sum of the input injection currents from all pins do not exceed the specified limit. Characterized but not tested.

© 2009-2012 Microchip Technology Inc.

TABLE 25-9: DC CHARACTERISTICS: I/O PIN INPUT SPECIFICATIONS (CONTINUED)

DC CHARACTERISTICS			Standard Operating Conditions: 3.0V to 3.6V (unless otherwise stated) Operating temperature -40°C ≤ TA ≤ +85°C for Industrial -40°C ≤ TA ≤ +125°C for Extended				
Param No.	**Symbol**	**Characteristic**	**Min**	**Typ(1)**	**Max**	**Units**	**Conditions**
DI60a	I_{ICL}	**Input Low Injection Current**	0	—	-5(5,8)	mA	All pins except V_{DD}, V_{SS}, AV_{DD}, AV_{SS}, $\overline{MCLR}$, V_{CAP}, SOSCI, SOSCO, and RB11
DI60b	I_{ICH}	**Input High Injection Current**	0	—	+5(6,7,8)	mA	All pins except V_{DD}, V_{SS}, AV_{DD}, AV_{SS}, $\overline{MCLR}$, V_{CAP}, SOSCI, SOSCO, RB11, and all 5V tolerant pins(7)
DI60c	$\sum I_{ICT}$	**Total Input Injection Current (sum of all I/O and control pins)**	-20(9)	—	+20(9)	mA	Absolute instantaneous sum of all ± input injection currents from all I/O pins $(\lvert I_{ICL} \rvert + \lvert I_{ICH} \rvert) \leq \sum I_{ICT}$

Note 1: Data in "Typ" column is at 3.3V, 25°C unless otherwise stated.

2: The leakage current on the $\overline{MCLR}$ pin is strongly dependent on the applied voltage level. The specified levels represent normal operating conditions. Higher leakage current may be measured at different input voltages.

3: Negative current is defined as current sourced by the pin.

4: See **"Pin Diagrams"** for a list of 5V tolerant pins.

5: V_{IL} source < (V_{SS} – 0.3). Characterized but not tested.

6: Non-5V tolerant pins V_{IH} source > (V_{DD} + 0.3), 5V tolerant pins V_{IH} source > 5.5V. Characterized but not tested.

7: Digital 5V tolerant pins cannot tolerate any "positive" input injection current from input sources > 5.5V.

8: Injection currents > | 0 | can affect the ADC results by approximately 4-6 counts.

9: Any number and/or combination of I/O pins not excluded under I_{ICL} or I_{ICH} conditions are permitted provided the mathematical "absolute instantaneous" sum of the input injection currents from all pins do not exceed the specified limit. Characterized but not tested.

TABLE 25-10: DC CHARACTERISTICS: I/O PIN OUTPUT SPECIFICATIONS

DC CHARACTERISTICS			Standard Operating Conditions: 3.0V to 3.6V (unless otherwise stated) Operating temperature -40°C ≤ TA ≤ +85°C for Industrial -40°C ≤ TA ≤ +125°C for Extended				
Param No.	**Symbol**	**Characteristic**	**Min**	**Typ**	**Max**	**Units**	**Conditions**
DO10	VOL	**Output Low Voltage** I/O Pins: 2x Sink Driver Pins - All pins not defined by 4x or 8x driver pins	—	—	0.4	V	IOL ≤ 3 mA, VDD = 3.3V
		Output Low Voltage I/O Pins: 4x Sink Driver Pins - RA2, RA3, RA9, RA10, RA14, RA15, RB0, RB1, RB11, RF4, RF5, RG2, RG3	—	—	0.4	V	IOL ≤ 6 mA, VDD = 3.3V
		Output Low Voltage I/O Pins: 8x Sink Driver Pins - OSC2, CLKO, RC15	—	—	0.4	V	IOL ≤ 10 mA, VDD = 3.3V
DO20	VOH	**Output High Voltage** I/O Pins: 2x Source Driver Pins - All pins not defined by 4x or 8x driver pins	2.4	—	—	V	IOL ≥ -3 mA, VDD = 3.3V
		Output High Voltage I/O Pins: 4x Source Driver Pins - RA2, RA3, RA9, RA10, RA14, RA15, RB0, RB1, RB11, RF4, RF5, RG2, RG3	2.4	—	—	V	IOL ≥ -6 mA, VDD = 3.3V
		Output High Voltage I/O Pins: 8x Source Driver Pins - OSC2, CLKO, RC15	2.4	—	—	V	IOL ≥ -10 mA, VDD = 3.3V
DO20A	VOH1	**Output High Voltage** I/O Pins: 2x Source Driver Pins - All pins not defined by 4x or 8x driver pins	1.5	—	—	V	IOH ≥ -6 mA, VDD = 3.3V See **Note 1**
			2.0	—	—		IOH ≥ -5 mA, VDD = 3.3V See **Note 1**
			3.0	—	—		IOH ≥ -2 mA, VDD = 3.3V See **Note 1**
		Output High Voltage 4x Source Driver Pins - RA2, RA3, RA9, RA10, RA14, RA15, RB0, RB1, RB11, RF4, RF5, RG2, RG3	1.5	—	—	V	IOH ≥ -12 mA, VDD = 3.3V See **Note 1**
			2.0	—	—		IOH ≥ -11 mA, VDD = 3.3V See **Note 1**
			3.0	—	—		IOH ≥ -3 mA, VDD = 3.3V See **Note 1**
		Output High Voltage 8x Source Driver Pins - OSC2, CLKO, RC15	1.5	—	—	V	IOH ≥ -16 mA, VDD = 3.3V See **Note 1**
			2.0	—	—		IOH ≥ -12 mA, VDD = 3.3V See **Note 1**
			3.0	—	—		IOH ≥ -4 mA, VDD = 3.3V See **Note 1**

Note 1: Parameters are characterized, but not tested.

© 2009-2012 Microchip Technology Inc.

TABLE 25-11: ELECTRICAL CHARACTERISTICS: BOR

DC CHARACTERISTICS			Standard Operating Conditions: 3.0V to 3.6V (unless otherwise stated) Operating temperature -40°C ≤ TA ≤ +85°C for Industrial -40°C ≤ TA ≤ +125°C for Extended				
Param.	**Symbol**	**Characteristic(1)**	**Min(1)**	**Typ**	**Max(1)**	**Units**	**Conditions**
BO10	VBOR	BOR Event on VDD transition high-to-low	2.40	—	2.55	V	VDD

Note 1: Parameters are for design guidance only and are not tested in manufacturing.

TABLE 25-12: DC CHARACTERISTICS: PROGRAM MEMORY

DC CHARACTERISTICS			Standard Operating Conditions: 3.0V to 3.6V (unless otherwise stated) Operating temperature -40°C ≤ TA ≤ +85°C for Industrial -40°C ≤ TA ≤ +125°C for Extended				
Param.	**Symbol**	**Characteristic(3)**	**Min**	**Typ(1)**	**Max**	**Units**	**Conditions**
		Program Flash Memory					
D130	EP	Cell Endurance	10,000	—	—	E/W	
D131	VPR	VDD for Read	VMIN	—	3.6	V	VMIN = Minimum operating voltage
D132b	VPEW	VDD for Self-Timed Write	VMIN	—	3.6	V	VMIN = Minimum operating voltage
D134	TRETD	Characteristic Retention	20	—	—	Year	Provided no other specifications are violated
D135	IDDP	Supply Current during Programming	—	10	—	mA	
D136a	TRW	Row Write Time	1.32	—	1.74	ms	TRW = 11064 FRC cycles, TA = +85°C, See **Note 2**
D136b	TRW	Row Write Time	1.28	—	1.79	ms	TRW = 11064 FRC cycles, TA = +150°C, See **Note 2**
D137a	TPE	Page Erase Time	20.1	—	26.5	ms	TPE = 168517 FRC cycles, TA = +85°C, See **Note 2**
D137b	TPE	Page Erase Time	19.5	—	27.3	ms	TPE = 168517 FRC cycles, TA = +150°C, See **Note 2**
D138a	TWW	Word Write Cycle Time	42.3	—	55.9	μs	TWW = 355 FRC cycles, TA = +85°C, See **Note 2**
D138b	TWW	Word Write Cycle Time	41.1	—	57.6	μs	TWW = 355 FRC cycles, TA = +150°C, See **Note 2**

Note 1: Data in "Typ" column is at 3.3V, 25°C unless otherwise stated.

2: Other conditions: FRC = 7.37 MHz, TUN<5:0> = b'011111 (for Min), TUN<5:0> = b'100000 (for Max). This parameter depends on the FRC accuracy (see Table 25-19) and the value of the FRC Oscillator Tuning register (see Register 9-4). For complete details on calculating the Minimum and Maximum time see **Section 5.3 "Programming Operations"**.

3: These parameters are assured by design, but are not characterized or tested in manufacturing.

TABLE 25-13: INTERNAL VOLTAGE REGULATOR SPECIFICATIONS

Standard Operating Conditions: 3.0V to 3.6V (unless otherwise stated) Operating temperature -40°C ≤ TA ≤ +85°C for Industrial -40°C ≤ TA ≤ +125°C for Extended							
Param.	**Symbol**	**Characteristics**	**Min**	**Typ**	**Max**	**Units**	**Comments**
—	CEFC	External Filter Capacitor Value(1)	4.7	10	—	μF	Capacitor must be low series resistance (< 5 ohms)

Note 1: Typical VCORE voltage = 2.5V when VDD ≥ VDDMIN.

25.2 AC Characteristics and Timing Parameters

The information contained in this section defines dsPIC33FJXXXGPX06A/X08A/X10A AC characteristics and timing parameters.

TABLE 25-14: TEMPERATURE AND VOLTAGE SPECIFICATIONS – AC

AC CHARACTERISTICS	**Standard Operating Conditions: 3.0V to 3.6V (unless otherwise stated)** Operating temperature -40°C ≤ TA ≤ +85°C for Industrial -40°C ≤ TA ≤ +125°C for Extended Operating voltage VDD range as described in Table 25-1.

FIGURE 25-1: LOAD CONDITIONS FOR DEVICE TIMING SPECIFICATIONS

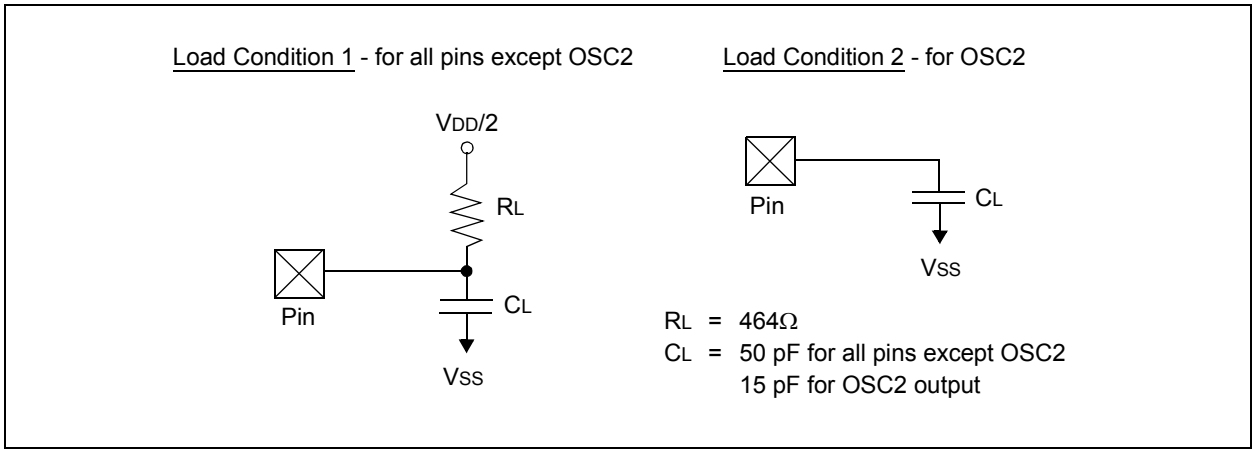

TABLE 25-15: CAPACITIVE LOADING REQUIREMENTS ON OUTPUT PINS

Param No.	Symbol	Characteristic	Min	Typ	Max	Units	Conditions
DO50	COSC2	OSC2/SOSC2 pin	—	—	15	pF	In XT and HS modes when external clock is used to drive OSC1
DO56	CIO	All I/O pins and OSC2	—	—	50	pF	EC mode
DO58	CB	SCLx, SDAx	—	—	400	pF	In I²C™ mode

© 2009-2012 Microchip Technology Inc.

FIGURE 25-2: EXTERNAL CLOCK TIMING

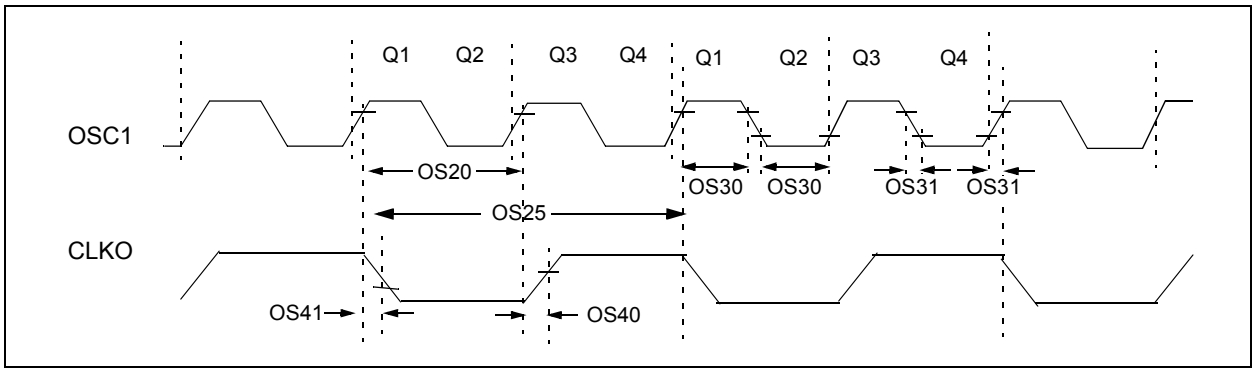

TABLE 25-16: EXTERNAL CLOCK TIMING REQUIREMENTS

AC CHARACTERISTICS			Standard Operating Conditions: 3.0V to 3.6V (unless otherwise stated) Operating temperature -40°C ≤ TA ≤ +85°C for Industrial -40°C ≤ TA ≤ +125°C for Extended				
Param No.	**Symbol**	**Characteristic**	**Min**	**Typ(1)**	**Max**	**Units**	**Conditions**
OS10	FIN	External CLKI Frequency (External clocks allowed only in EC and ECPLL modes)	DC	—	40	MHz	EC
		Oscillator Crystal Frequency	3.5 10 —	— — —	10 40 33	MHz MHz kHz	XT HS SOSC
OS20	TOSC	TOSC = 1/FOSC	12.5	—	DC	ns	—
OS25	TCY	Instruction Cycle Time(2)	25	—	DC	ns	—
OS30	TosL, TosH	External Clock in (OSC1) High or Low Time	0.375 x TOSC	—	0.625 x TOSC	ns	EC
OS31	TosR, TosF	External Clock in (OSC1) Rise or Fall Time	—	—	20	ns	EC
OS40	TckR	CLKO Rise Time(3)	—	5.2	—	ns	—
OS41	TckF	CLKO Fall Time(3)	—	5.2	—	ns	—
OS42	GM	External Oscillator Transconductance(4)	14	16	18	mA/V	VDD = 3.3V TA = +25ºC

Note 1: Data in “Typ” column is at 3.3V, 25°C unless otherwise stated.

2: Instruction cycle period (TCY) equals two times the input oscillator time-base period. All specified values are based on characterization data for that particular oscillator type under standard operating conditions with the device executing code. Exceeding these specified limits may result in an unstable oscillator operation and/or higher than expected current consumption. All devices are tested to operate at “min.” values with an external clock applied to the OSC1/CLKI pin. When an external clock input is used, the “max.” cycle time limit is “DC” (no clock) for all devices.

3: Measurements are taken in EC mode. The CLKO signal is measured on the OSC2 pin.

4: Data for this parameter is Preliminary. This parameter is characterized, but not tested in manufacturing.

TABLE 25-17: PLL CLOCK TIMING SPECIFICATIONS (V_{DD} = 3.0V TO 3.6V)

AC CHARACTERISTICS			Standard Operating Conditions: 3.0V to 3.6V (unless otherwise stated) Operating temperature -40°C ≤ TA ≤ +85°C for Industrial -40°C ≤ TA ≤ +125°C for Extended				
Param No.	**Symbol**	**Characteristic**	**Min**	**Typ(1)**	**Max**	**Units**	**Conditions**
OS50	FPLLI	PLL Voltage Controlled Oscillator (VCO) Input Frequency Range(2)	0.8	—	8.0	MHz	ECPLL, HSPLL, XTPLL modes
OS51	FSYS	On-Chip VCO System Frequency	100	—	200	MHz	—
OS52	TLOCK	PLL Start-up Time (Lock Time)	0.9	1.5	3.1	ms	—
OS53	DCLK	CLKO Stability (Jitter)	-3.0	0.5	3.0	%	Measured over 100 ms period

Note 1: Data in “Typ” column is at 3.3V, 25°C unless otherwise stated.

2: These parameters are characterized by similarity but are not tested in manufacturing. This specification is based on clock cycle by clock cycle measurements. To calculate the effective jitter for individual time base or communication clocks used by peripherals use the formula:

Peripheral Clock Jitter = DCLK / √(FOSC/Peripheral bit rate clock)

Example Only: Fosc = 80 MHz, DCLK = 3%, SPI bit rate clock, (i.e. SCK), is 5 MHz

SPI SCK Jitter = [DCLK / √(80 MHz/5 MHz)] = [3%/ √16] = [3% / 4] = 0.75%

TABLE 25-18: AC CHARACTERISTICS: INTERNAL FRC ACCURACY

AC CHARACTERISTICS		Standard Operating Conditions: 3.0V to 3.6V (unless otherwise stated) Operating temperature -40°C ≤ TA ≤ +85°C for Industrial -40°C ≤ TA ≤ +125°C for Extended					
Param No.	**Characteristic**	**Min**	**Typ**	**Max**	**Units**	**Conditions**	
	Internal FRC Accuracy @ FRC Frequency = 7.37 MHz(1)						
F20a	FRC	-2	—	+2	%	-40°C ≤ TA ≤ +85°C	VDD = 3.0-3.6V
F20b	FRC	-5	—	+5	%	-40°C ≤ TA ≤ +125°C	VDD = 3.0-3.6V

Note 1: Frequency calibrated at 25°C and 3.3V. TUN bits can be used to compensate for temperature drift.

TABLE 25-19: INTERNAL LPRC ACCURACY

AC CHARACTERISTICS		Standard Operating Conditions: 3.0V to 3.6V (unless otherwise stated) Operating temperature -40°C ≤ TA ≤ +85°C for Industrial -40°C ≤ TA ≤ +125°C for Extended					
Param No.	**Characteristic**	**Min**	**Typ**	**Max**	**Units**	**Conditions**	
	LPRC @ 32.768 kHz(1)						
F21a	LPRC	-30	—	+30	%	-40°C ≤ TA ≤ +85°C	—
F21b	LPRC	-35	—	+35	%	-40°C ≤ TA ≤ +125°C	—

Note 1: Change of LPRC frequency as VDD changes.

© 2009-2012 Microchip Technology Inc.

FIGURE 25-3: CLKO AND I/O TIMING CHARACTERISTICS

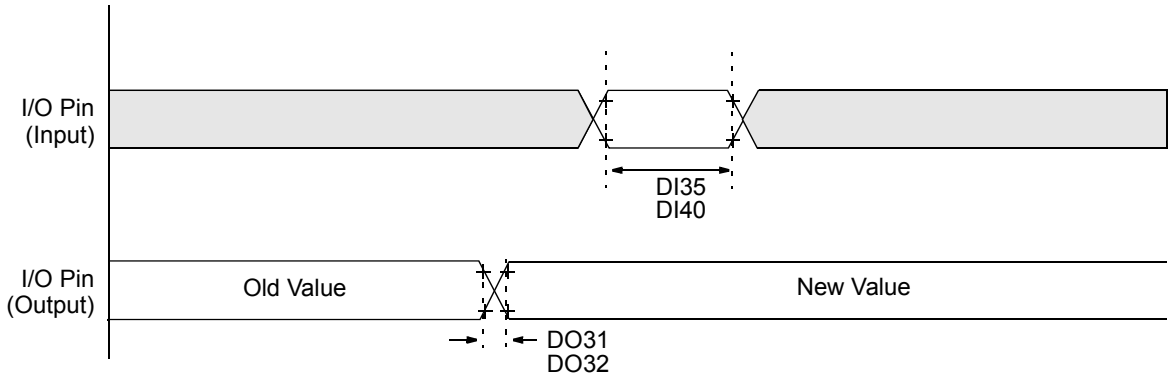

Note: Refer to Figure 25-1 for load conditions.

TABLE 25-20: I/O TIMING REQUIREMENTS

AC CHARACTERISTICS			**Standard Operating Conditions: 3.0V to 3.6V (unless otherwise stated)** Operating temperature -40°C ≤ TA ≤ +85°C for Industrial -40°C ≤ TA ≤ +125°C for Extended				
Param No.	**Symbol**	**Characteristic**	**Min**	**Typ(1)**	**Max**	**Units**	**Conditions**
DO31	TIOR	Port Output Rise Time	—	10	25	ns	—
DO32	TIOF	Port Output Fall Time	—	10	25	ns	—
DI35	TINP	INTx Pin High or Low Time (input)	20	—	—	ns	—
DI40	TRBP	CNx High or Low Time (input)	2	—	—	TCY	—

Note 1: Data in “Typ” column is at 3.3V, 25°C unless otherwise stated.

FIGURE 25-4: RESET, WATCHDOG TIMER, OSCILLATOR START-UP TIMER AND POWER-UP TIMER TIMING CHARACTERISTICS

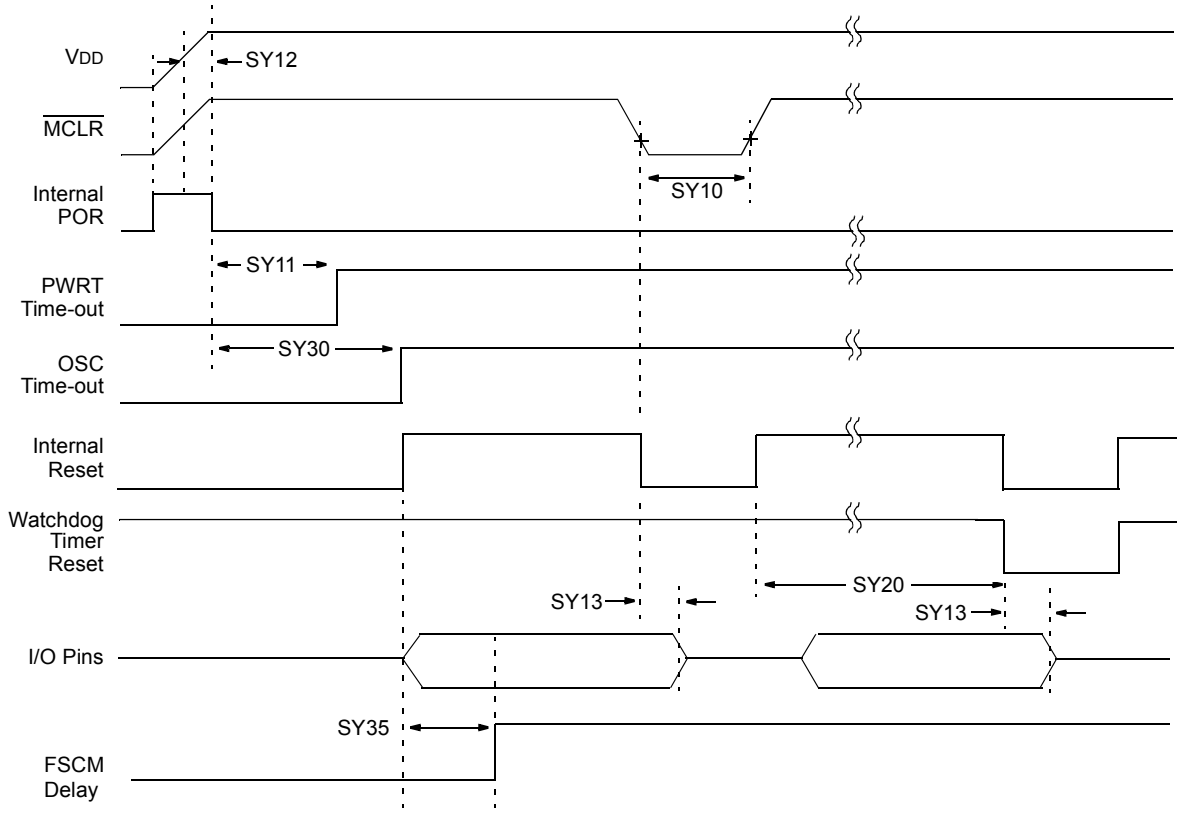

Note: Refer to Figure 25-1 for load conditions.

© 2009-2012 Microchip Technology Inc.

TABLE 25-21: RESET, WATCHDOG TIMER, OSCILLATOR START-UP TIMER, POWER-UP TIMER TIMING REQUIREMENTS

AC CHARACTERISTICS			Standard Operating Conditions: 3.0V to 3.6V (unless otherwise stated) Operating temperature -40°C ≤ TA ≤ +85°C for Industrial -40°C ≤ TA ≤ +125°C for Extended				
Param No.	**Symbol**	**Characteristic(1)**	**Min**	**Typ(2)**	**Max**	**Units**	**Conditions**
SY10	TMCL	$\overline{\text{MCLR}}$ Pulse-Width (low)	2	—	—	μs	-40°C to +85°C
SY11	TPWRT	Power-up Timer Period	— — — — — — —	2 4 8 16 32 64 128	— — — — — — —	ms	-40°C to +85°C User programmable
SY12	TPOR	Power-on Reset Delay	3	10	30	μs	-40°C to +85°C
SY13	TIOZ	I/O High-Impedance from $\overline{\text{MCLR}}$ Low or Watchdog Timer Reset	0.68	0.72	1.2	μs	—
SY20	TWDT1	Watchdog Timer Time-out Period	—	—	—	—	See **Section 22.4 "Watchdog Timer (WDT)"** and LPRC specification F21 (Table 25-19)
SY30	TOST	Oscillator Start-up Timer Period	—	1024 TOSC	—	—	TOSC = OSC1 period
SY35	TFSCM	Fail-Safe Clock Monitor Delay	—	500	900	μs	-40°C to +85°C

Note 1: These parameters are characterized but not tested in manufacturing.
2: Data in "Typ" column is at 3.3V, 25°C unless otherwise stated.

FIGURE 25-5: TIMER1, 2, 3, 4, 5, 6, 7, 8 AND 9 EXTERNAL CLOCK TIMING CHARACTERISTICS

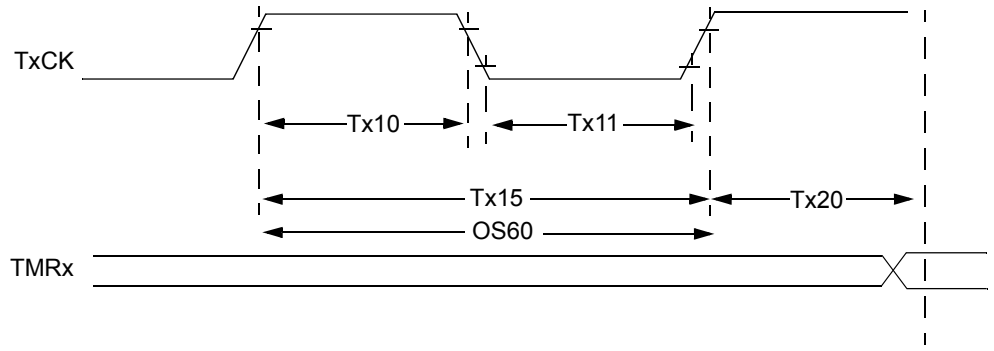

Note: Refer to Figure 25-1 for load conditions.

TABLE 25-22: TIMER1 EXTERNAL CLOCK TIMING REQUIREMENTS(1)

AC CHARACTERISTICS				Standard Operating Conditions: 3.0V to 3.6V (unless otherwise stated) Operating temperature -40°C ≤ TA ≤ +85°C for Industrial -40°C ≤ TA ≤ +125°C for Extended				
Param No.	**Symbol**	**Characteristic**		**Min**	**Typ**	**Max**	**Units**	**Conditions**
TA10	TTXH	TxCK High Time	Synchronous, no prescaler	TCY + 20	—	—	ns	Must also meet parameter TA15
			Synchronous, with prescaler	(TCY + 20)/N	—	—	ns	
			Asynchronous	20	—	—	ns	
TA11	TTXL	TxCK Low Time	Synchronous, no prescaler	(TCY + 20)/N	—	—	ns	Must also meet parameter TA15
			Synchronous, with prescaler	20	—	—	ns	N = prescale value (1,8,64,256)
			Asynchronous	20	—	—	ns	
TA15	TTXP	TxCK Input Period	Synchronous, no prescaler	2TCY + 40	—	—	ns	—
			Synchronous, with prescaler	Greater of 40 ns or (2TCY + 40)/N	—	—	—	N = prescale value (1, 8, 64, 256)
			Asynchronous	40	—	—	ns	—
OS60	Ft1	SOSC1/T1CK Oscillator Input frequency Range (oscillator enabled by setting TCS bit (T1CON<1>))		DC	—	50	kHz	—
TA20	TCKEXTMRL	Delay from External TxCK Clock Edge to Timer Increment		0.75TCY+40	—	1.75TCY+40	ns	—

Note 1: Timer1 is a Type A.

© 2009-2012 Microchip Technology Inc.

TABLE 25-23: TIMER2, TIMER4, TIMER6 AND TIMER8 EXTERNAL CLOCK TIMING REQUIREMENTS

AC CHARACTERISTICS				Standard Operating Conditions: 3.0V to 3.6V (unless otherwise stated) Operating temperature -40°C ≤ TA ≤ +85°C for Industrial -40°C ≤ TA ≤ +125°C for Extended				
Param No.	**Symbol**	**Characteristic(1)**		**Min**	**Typ**	**Max**	**Units**	**Conditions**
TB10	TtxH	TxCK High Time	Synchronous mode	Greater of 20 or (TCY + 20)/N	—	—	ns	Must also meet parameter TB15 N = prescale value (1, 8, 64, 256)
TB11	TtxL	TxCK Low Time	Synchronous mode	Greater of: 20 or (TCY + 20)/N	—	—	ns	Must also meet parameter TB15 N = prescale value (1, 8, 64, 256)
TB15	TtxP	TxCK Input Period	Synchronous mode	Greater of: 40 or (2 TCY + 40)/N	—	—	ns	N = prescale value (1, 8, 64, 256)
TB20	TCKEXTMRL	Delay from External TxCK Clock Edge to Timer Increment		0.75 TCY + 40	—	1.75 TCY + 40	ns	—

Note 1: These parameters are characterized, but are not tested in manufacturing.

TABLE 25-24: TIMER3, TIMER5, TIMER7 AND TIMER9 EXTERNAL CLOCK TIMING REQUIREMENTS

AC CHARACTERISTICS				Standard Operating Conditions: 3.0V to 3.6V (unless otherwise stated) Operating temperature -40°C ≤ TA ≤ +85°C for Industrial -40°C ≤ TA ≤ +125°C for Extended				
Param No.	**Symbol**	**Characteristic(1)**		**Min**	**Typ**	**Max**	**Units**	**Conditions**
TC10	TtxH	TxCK High Time	Synchronous	TCY + 20	—	—	ns	Must also meet parameter TC15
TC11	TtxL	TxCK Low Time	Synchronous	TCY + 20	—	—	ns	Must also meet parameter TC15
TC15	TtxP	TxCK Input Period	Synchronous, with prescaler	2TCY + 40	—	—	ns	N = prescale value (1, 8, 64, 256)
TC20	TCKEXTMRL	Delay from External TxCK Clock Edge to Timer Increment		0.75 TCY + 40	—	1.75 TCY + 40	ns	—

Note 1: These parameters are characterized, but are not tested in manufacturing.

FIGURE 25-6: INPUT CAPTURE (CAPx) TIMING CHARACTERISTICS

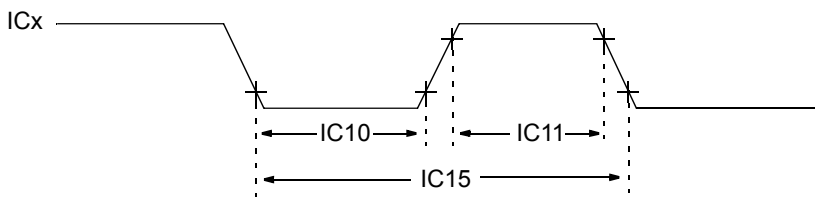

Note: Refer to Figure 25-1 for load conditions.

TABLE 25-25: INPUT CAPTURE TIMING REQUIREMENTS

AC CHARACTERISTICS				Standard Operating Conditions: 3.0V to 3.6V (unless otherwise stated) Operating temperature -40°C ≤ TA ≤ +85°C -40°C ≤ TA ≤ +125°C for Extended			
Param No.	**Symbol**	**Characteristic(1)**		**Min**	**Max**	**Units**	**Conditions**
IC10	TccL	ICx Input Low Time	No Prescaler	0.5 TCY + 20	—	ns	—
			With Prescaler	10	—	ns	
IC11	TccH	ICx Input High Time	No Prescaler	0.5 TCY + 20	—	ns	—
			With Prescaler	10	—	ns	
IC15	TccP	ICx Input Period		(TCY + 40)/N	—	ns	N = prescale value (1, 4, 16)

Note 1: These parameters are characterized but not tested in manufacturing.

FIGURE 25-7: OUTPUT COMPARE MODULE (OCx) TIMING CHARACTERISTICS

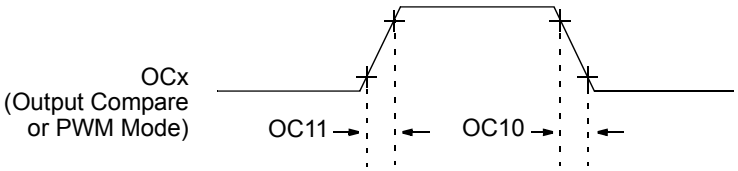

Note: Refer to Figure 25-1 for load conditions.

TABLE 25-26: OUTPUT COMPARE MODULE TIMING REQUIREMENTS

AC CHARACTERISTICS			Standard Operating Conditions: 3.0V to 3.6V (unless otherwise stated) Operating temperature -40°C ≤ TA ≤ +85°C -40°C ≤ TA ≤ +125°C for Extended				
Param No.	**Symbol**	**Characteristic(1)**	**Min**	**Typ**	**Max**	**Units**	**Conditions**
OC10	TccF	OCx Output Fall Time	—	—	—	ns	See parameter D032
OC11	TccR	OCx Output Rise Time	—	—	—	ns	See parameter D031

Note 1: These parameters are characterized but not tested in manufacturing.

© 2009-2012 Microchip Technology Inc.

FIGURE 25-8: OC/PWM MODULE TIMING CHARACTERISTICS

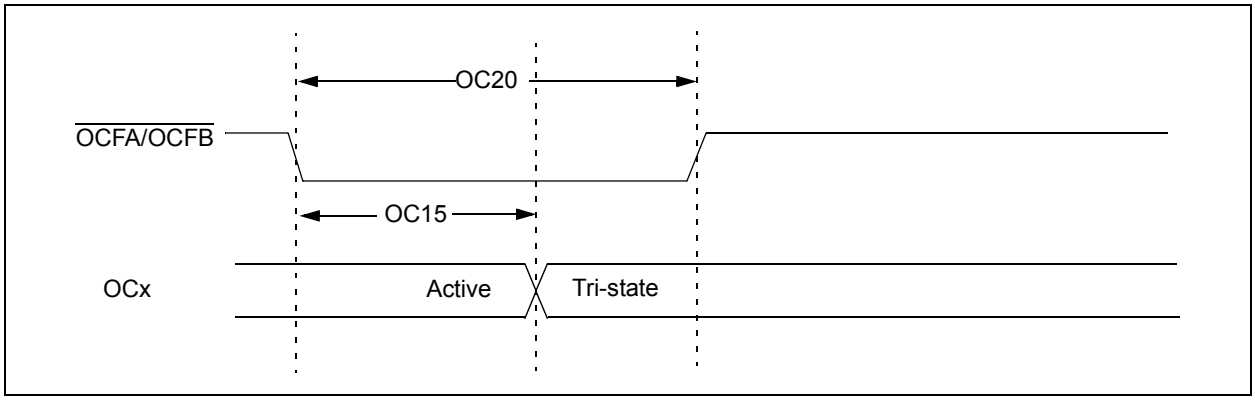

TABLE 25-27: SIMPLE OC/PWM MODE TIMING REQUIREMENTS

AC CHARACTERISTICS			Standard Operating Conditions: 3.0V to 3.6V (unless otherwise stated) Operating temperature -40°C ≤ TA ≤ +85°C -40°C ≤ TA ≤ +125°C for Extended				
Param No.	**Symbol**	**Characteristic(1)**	**Min**	**Typ**	**Max**	**Units**	**Conditions**
OC15	TFD	Fault Input to PWM I/O Change	—	—	TCY+20	ns	—
OC20	TFLT	Fault Input Pulse-Width	TCY+20	—	—	ns	—

Note 1: These parameters are characterized but not tested in manufacturing.

TABLE 25-28: SPIx MAXIMUM DATA/CLOCK RATE SUMMARY

AC CHARACTERISTICS			Standard Operating Conditions: 3.0V to 3.6V (unless otherwise stated) Operating temperature -40°C ≤ TA ≤ +85°C for Industrial -40°C ≤ TA ≤ +125°C for Extended			
Maximum Data Rate	**Master Transmit Only (Half-Duplex)**	**Master Transmit/Receive (Full-Duplex)**	**Slave Transmit/Receive (Full-Duplex)**	**CKE**	**CKP**	**SMP**
15 MHz	Table 25-29	—	—	0,1	0,1	0,1
10 MHz	—	Table 25-30	—	1	0,1	1
10 MHz	—	Table 25-31	—	0	0,1	1
15 MHz	—	—	Table 25-32	1	0	0
11 MHz	—	—	Table 25-33	1	1	0
15 MHz	—	—	Table 25-34	0	1	0
11 MHz	—	—	Table 25-35	0	0	0

FIGURE 25-9: SPIx MASTER MODE (HALF-DUPLEX, TRANSMIT ONLY CKE = 0) TIMING CHARACTERISTICS

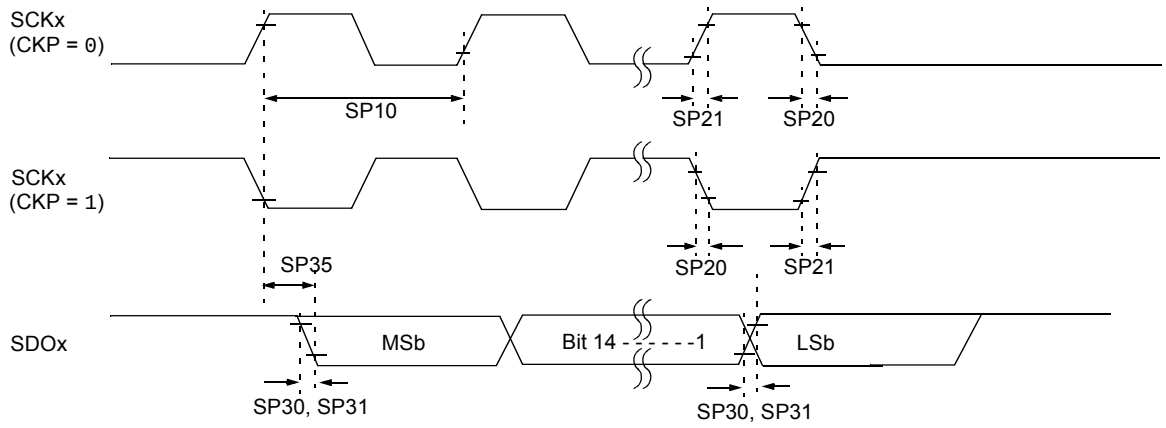

Note: Refer to Figure 25-1 for load conditions.

© 2009-2012 Microchip Technology Inc.

FIGURE 25-10: SPIx MASTER MODE (HALF-DUPLEX, TRANSMIT ONLY CKE = 1) TIMING CHARACTERISTICS

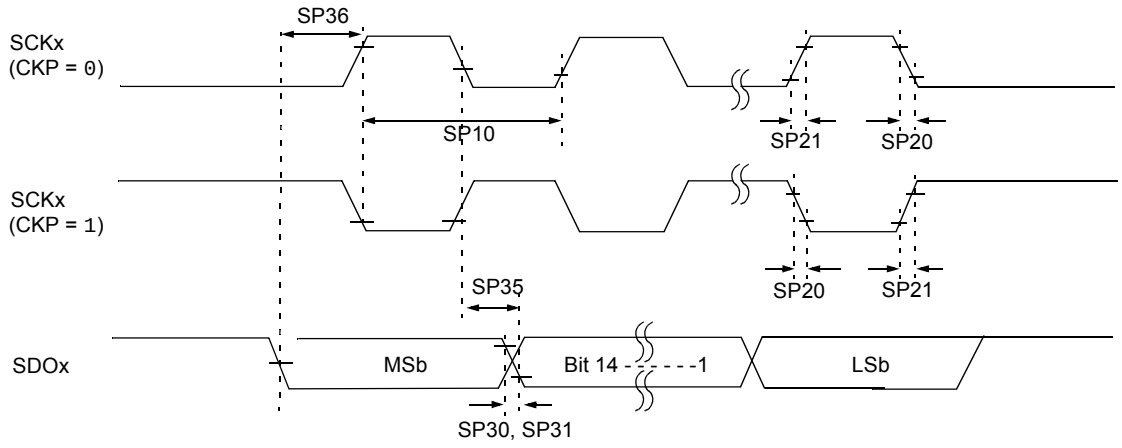

Note: Refer to Figure 25-1 for load conditions.

TABLE 25-29: SPIx MASTER MODE (HALF-DUPLEX, TRANSMIT ONLY) TIMING REQUIREMENTS

AC CHARACTERISTICS			Standard Operating Conditions: 3.0V to 3.6V (unless otherwise stated) Operating temperature -40°C ≤ TA ≤ +85°C for Industrial -40°C ≤ TA ≤ +125°C for Extended				
Param No.	**Symbol**	**Characteristic(1)**	**Min**	**Typ(2)**	**Max**	**Units**	**Conditions**
SP10	TscP	Maximum SCK Frequency	—	—	15	MHz	See **Note 3**
SP20	TscF	SCKx Output Fall Time	—	—	—	ns	See parameter DO32 and **Note 4**
SP21	TscR	SCKx Output Rise Time	—	—	—	ns	See parameter DO31 and **Note 4**
SP30	TdoF	SDOx Data Output Fall Time	—	—	—	ns	See parameter DO32 and **Note 4**
SP31	TdoR	SDOx Data Output Rise Time	—	—	—	ns	See parameter DO31 and **Note 4**
SP35	TscH2doV, TscL2doV	SDOx Data Output Valid after SCKx Edge	—	6	20	ns	—
SP36	TdiV2scH, TdiV2scL	SDOx Data Output Setup to First SCKx Edge	30	—	—	ns	—

Note 1: These parameters are characterized, but are not tested in manufacturing.

2: Data in “Typ” column is at 3.3V, 25°C unless otherwise stated.

3: The minimum clock period for SCKx is 66.7 ns. Therefore, the clock generated in Master mode must not violate this specification.

4: Assumes 50 pF load on all SPIx pins.

FIGURE 25-11: SPIx MASTER MODE (FULL-DUPLEX, CKE = 1, CKP = X, SMP = 1) TIMING CHARACTERISTICS

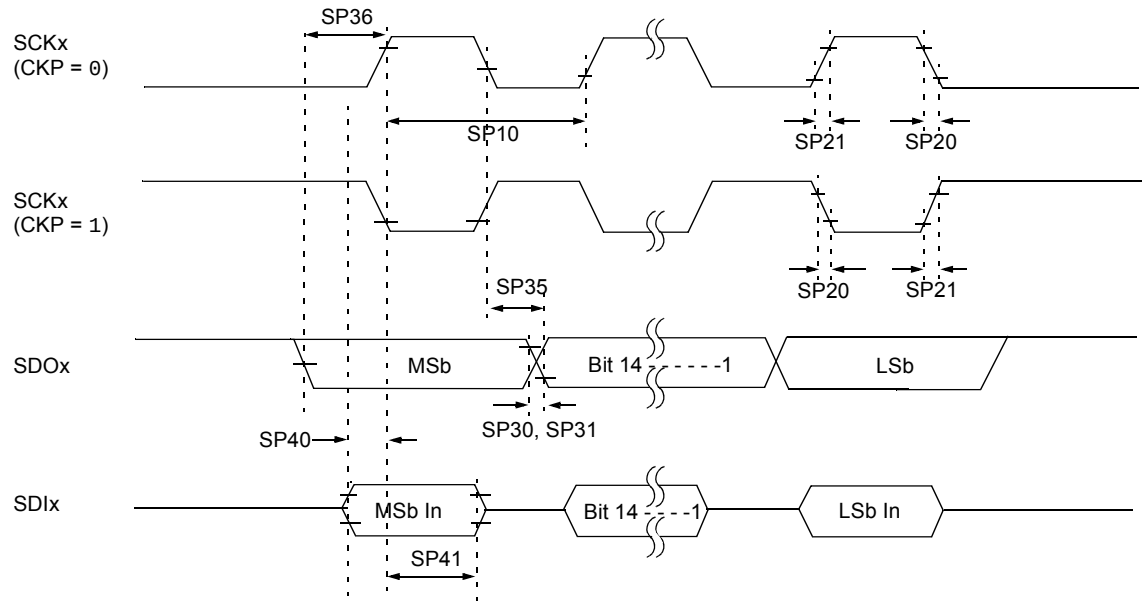

Note: Refer to Figure 25-1 for load conditions.

TABLE 25-30: SPIx MASTER MODE (FULL-DUPLEX, CKE = 1, CKP = x, SMP = 1) TIMING REQUIREMENTS

AC CHARACTERISTICS			Standard Operating Conditions: 3.0V to 3.6V (unless otherwise stated) Operating temperature -40°C ≤ TA ≤ +85°C for Industrial -40°C ≤ TA ≤ +125°C for Extended				
Param No.	**Symbol**	**Characteristic(1)**	**Min**	**Typ(2)**	**Max**	**Units**	**Conditions**
SP10	TscP	Maximum SCK Frequency	—	—	10	MHz	See **Note 3**
SP20	TscF	SCKx Output Fall Time	—	—	—	ns	See parameter DO32 and **Note 4**
SP21	TscR	SCKx Output Rise Time	—	—	—	ns	See parameter DO31 and **Note 4**
SP30	TdoF	SDOx Data Output Fall Time	—	—	—	ns	See parameter DO32 and **Note 4**
SP31	TdoR	SDOx Data Output Rise Time	—	—	—	ns	See parameter DO31 and **Note 4**
SP35	TscH2doV, TscL2doV	SDOx Data Output Valid after SCKx Edge	—	6	20	ns	—
SP36	TdoV2sc, TdoV2scL	SDOx Data Output Setup to First SCKx Edge	30	—	—	ns	—
SP40	TdiV2scH, TdiV2scL	Setup Time of SDIx Data Input to SCKx Edge	30	—	—	ns	—
SP41	TscH2diL, TscL2diL	Hold Time of SDIx Data Input to SCKx Edge	30	—	—	ns	—

Note 1: These parameters are characterized, but are not tested in manufacturing.
2: Data in “Typ” column is at 3.3V, 25°C unless otherwise stated.
3: The minimum clock period for SCKx is 100 ns. The clock generated in Master mode must not violate this specification.
4: Assumes 50 pF load on all SPIx pins.

© 2009-2012 Microchip Technology Inc.

FIGURE 25-12: SPIx MASTER MODE (FULL-DUPLEX, CKE = 0, CKP = X, SMP = 1) TIMING CHARACTERISTICS

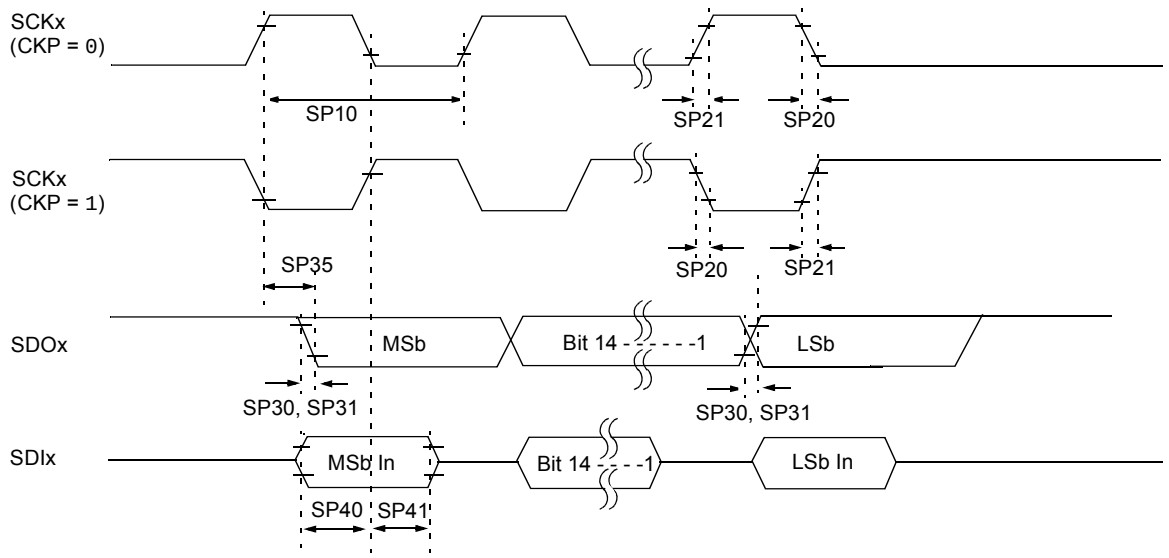

Note: Refer to Figure 25-1 for load conditions.

TABLE 25-31: SPIx MASTER MODE (FULL-DUPLEX, CKE = 0, CKP = x, SMP = 1) TIMING REQUIREMENTS

AC CHARACTERISTICS			Standard Operating Conditions: 2.4V to 3.6V (unless otherwise stated) Operating temperature -40°C ≤ TA ≤ +85°C for Industrial -40°C ≤ TA ≤ +125°C for Extended				
Param No.	**Symbol**	**Characteristic(1)**	**Min**	**Typ(2)**	**Max**	**Units**	**Conditions**
SP10	TscP	Maximum SCK Frequency	—	—	10	MHz	-40ºC to +125ºC and see **Note 3**
SP20	TscF	SCKx Output Fall Time	—	—	—	ns	See parameter DO32 and **Note 4**
SP21	TscR	SCKx Output Rise Time	—	—	—	ns	See parameter DO31 and **Note 4**
SP30	TdoF	SDOx Data Output Fall Time	—	—	—	ns	See parameter DO32 and **Note 4**
SP31	TdoR	SDOx Data Output Rise Time	—	—	—	ns	See parameter DO31 and **Note 4**
SP35	TscH2doV, TscL2doV	SDOx Data Output Valid after SCKx Edge	—	6	20	ns	—
SP36	TdoV2scH, TdoV2scL	SDOx Data Output Setup to First SCKx Edge	30	—	—	ns	—
SP40	TdiV2scH, TdiV2scL	Setup Time of SDIx Data Input to SCKx Edge	30	—	—	ns	—
SP41	TscH2diL, TscL2diL	Hold Time of SDIx Data Input to SCKx Edge	30	—	—	ns	—

Note 1: These parameters are characterized, but are not tested in manufacturing.
2: Data in “Typ” column is at 3.3V, 25°C unless otherwise stated.
3: The minimum clock period for SCKx is 100 ns. The clock generated in Master mode must not violate this specification.
4: Assumes 50 pF load on all SPIx pins.

FIGURE 25-13: SPIx SLAVE MODE (FULL-DUPLEX, CKE = 1, CKP = 0, SMP = 0) TIMING CHARACTERISTICS

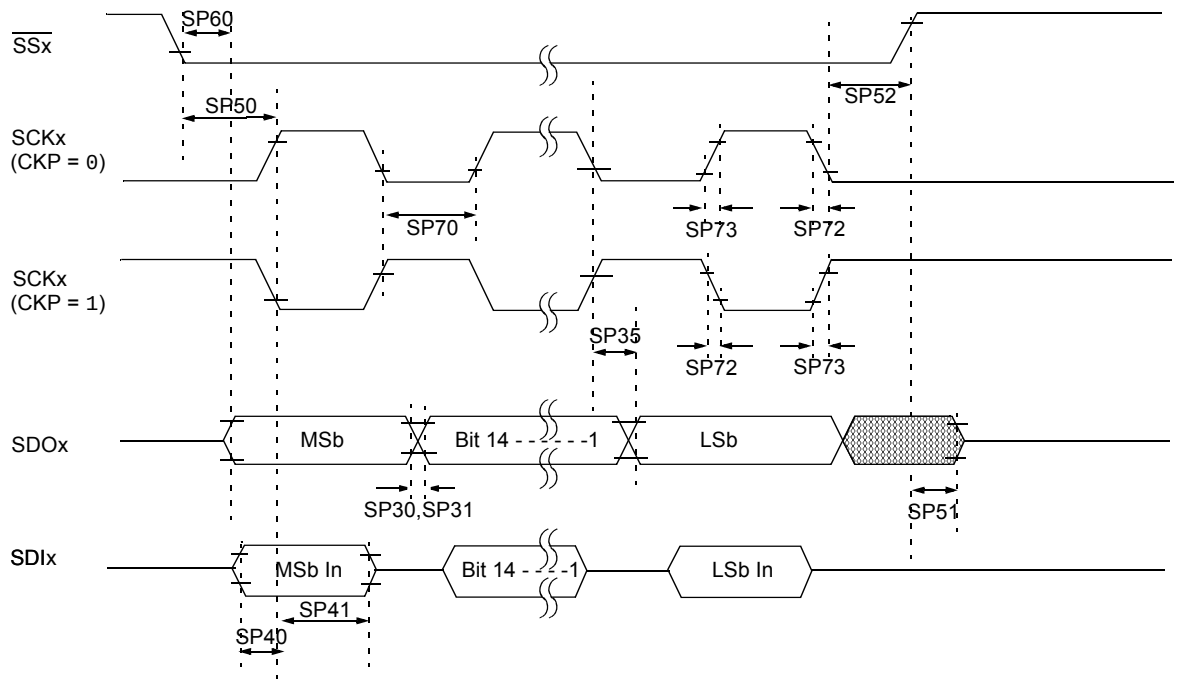

Note: Refer to Figure 25-1 for load conditions.

© 2009-2012 Microchip Technology Inc.

TABLE 25-32: SPIx SLAVE MODE (FULL-DUPLEX, CKE = 1, CKP = 0, SMP = 0) TIMING REQUIREMENTS

AC CHARACTERISTICS			Standard Operating Conditions: 2.4V to 3.6V (unless otherwise stated) Operating temperature -40°C ≤ TA ≤ +85°C for Industrial -40°C ≤ TA ≤ +125°C for Extended				
Param No.	**Symbol**	**Characteristic(1)**	**Min**	**Typ(2)**	**Max**	**Units**	**Conditions**
SP70	TscP	Maximum SCK Input Frequency	—	—	15	MHz	See **Note 3**
SP72	TscF	SCKx Input Fall Time	—	—	—	ns	See parameter DO32 and **Note 4**
SP73	TscR	SCKx Input Rise Time	—	—	—	ns	See parameter DO31 and **Note 4**
SP30	TdoF	SDOx Data Output Fall Time	—	—	—	ns	See parameter DO32 and **Note 4**
SP31	TdoR	SDOx Data Output Rise Time	—	—	—	ns	See parameter DO31 and **Note 4**
SP35	TscH2doV, TscL2doV	SDOx Data Output Valid after SCKx Edge	—	6	20	ns	—
SP36	TdoV2scH, TdoV2scL	SDOx Data Output Setup to First SCKx Edge	30	—	—	ns	—
SP40	TdiV2scH, TdiV2scL	Setup Time of SDIx Data Input to SCKx Edge	30	—	—	ns	—
SP41	TscH2diL, TscL2diL	Hold Time of SDIx Data Input to SCKx Edge	30	—	—	ns	—
SP50	TssL2scH, TssL2scL	$\overline{SSx}$ ↓ to SCKx ↑ or SCKx Input	120	—	—	ns	—
SP51	TssH2doZ	$\overline{SSx}$ ↑ to SDOx Output High-Impedance(4)	10	—	50	ns	—
SP52	TscH2ssH TscL2ssH	$\overline{SSx}$ after SCKx Edge	1.5 TCY + 40	—	—	ns	See **Note 4**
SP60	TssL2doV	SDOx Data Output Valid after $\overline{SSx}$ Edge	—	—	50	ns	—

Note 1: These parameters are characterized, but are not tested in manufacturing.

2: Data in “Typ” column is at 3.3V, 25°C unless otherwise stated.

3: The minimum clock period for SCKx is 66.7 ns. Therefore, the SCK clock generated by the Master must not violate this specificiation.

4: Assumes 50 pF load on all SPIx pins.

FIGURE 25-14: SPIx SLAVE MODE (FULL-DUPLEX, CKE = 1, CKP = 1, SMP = 0) TIMING CHARACTERISTICS

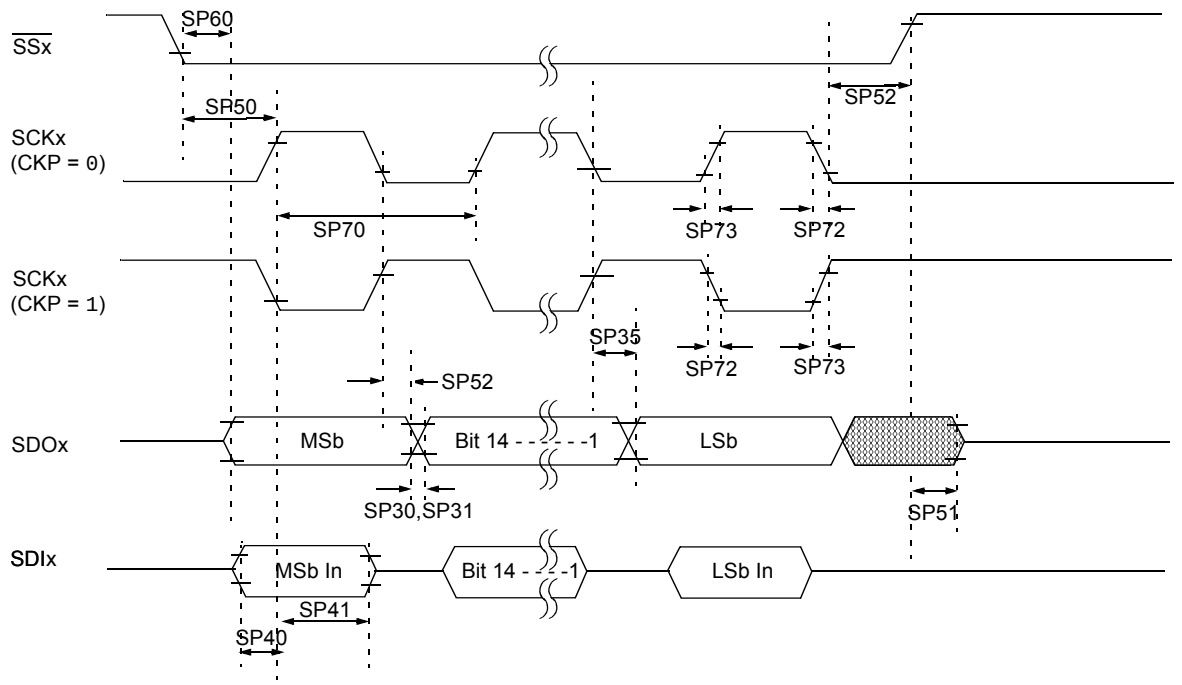

Note: Refer to Figure 25-1 for load conditions.

© 2009-2012 Microchip Technology Inc.

TABLE 25-33: SPIx SLAVE MODE (FULL-DUPLEX, CKE = 1, CKP = 1, SMP = 0) TIMING REQUIREMENTS

AC CHARACTERISTICS			Standard Operating Conditions: 2.4V to 3.6V (unless otherwise stated) Operating temperature -40°C ≤ TA ≤ +85°C for Industrial -40°C ≤ TA ≤ +125°C for Extended				
Param No.	**Symbol**	**Characteristic(1)**	**Min**	**Typ(2)**	**Max**	**Units**	**Conditions**
SP70	TscP	Maximum SCK Input Frequency	—	—	11	MHz	See **Note 3**
SP72	TscF	SCKx Input Fall Time	—	—	—	ns	See parameter DO32 and **Note 4**
SP73	TscR	SCKx Input Rise Time	—	—	—	ns	See parameter DO31 and **Note 4**
SP30	TdoF	SDOx Data Output Fall Time	—	—	—	ns	See parameter DO32 and **Note 4**
SP31	TdoR	SDOx Data Output Rise Time	—	—	—	ns	See parameter DO31 and **Note 4**
SP35	TscH2doV, TscL2doV	SDOx Data Output Valid after SCKx Edge	—	6	20	ns	—
SP36	TdoV2scH, TdoV2scL	SDOx Data Output Setup to First SCKx Edge	30	—	—	ns	—
SP40	TdiV2scH, TdiV2scL	Setup Time of SDIx Data Input to SCKx Edge	30	—	—	ns	—
SP41	TscH2diL, TscL2diL	Hold Time of SDIx Data Input to SCKx Edge	30	—	—	ns	—
SP50	TssL2scH, TssL2scL	$\overline{SSx}$ ↓ to SCKx ↑ or SCKx Input	120	—	—	ns	—
SP51	TssH2doZ	$\overline{SSx}$ ↑ to SDOx Output High-Impedance(4)	10	—	50	ns	—
SP52	TscH2ssH TscL2ssH	$\overline{SSx}$ after SCKx Edge	1.5 TCY + 40	—	—	ns	See **Note 4**
SP60	TssL2doV	SDOx Data Output Valid after $\overline{SSx}$ Edge	—	—	50	ns	—

Note 1: These parameters are characterized, but are not tested in manufacturing.

2: Data in "Typ" column is at 3.3V, 25°C unless otherwise stated.

3: The minimum clock period for SCKx is 91 ns. Therefore, the SCK clock generated by the Master must not violate this specificiation.

4: Assumes 50 pF load on all SPIx pins.

FIGURE 25-15: SPIx SLAVE MODE (FULL-DUPLEX CKE = 0, CKP = 1, SMP = 0) TIMING CHARACTERISTICS

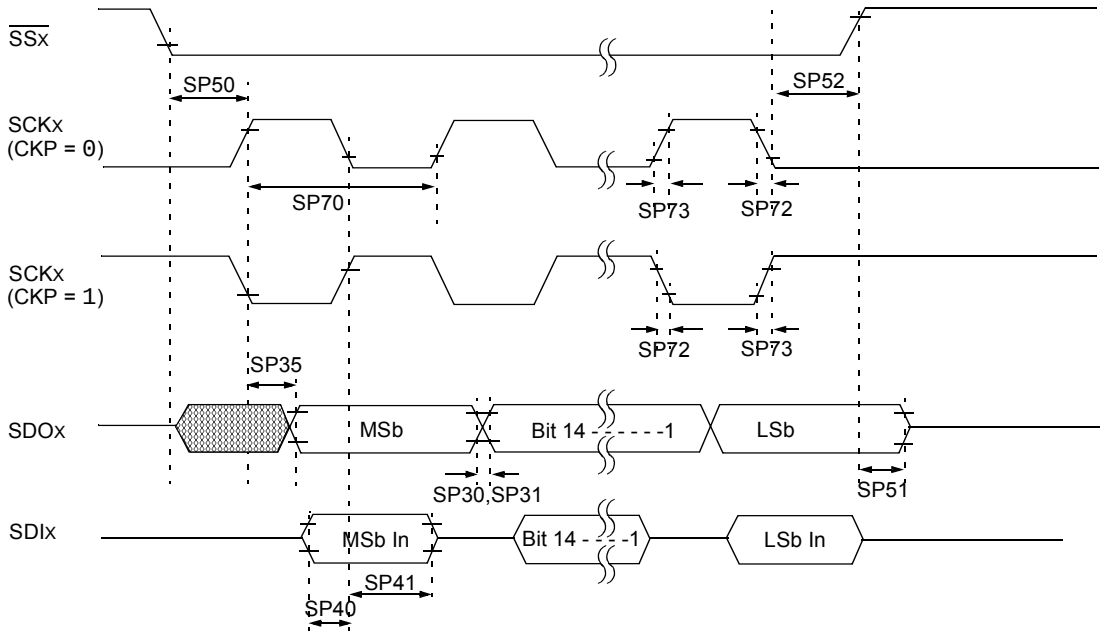

Note: Refer to Figure 25-1 for load conditions.

© 2009-2012 Microchip Technology Inc.

TABLE 25-34: SPIx SLAVE MODE (FULL-DUPLEX, CKE = 0, CKP = 1, SMP = 0) TIMING REQUIREMENTS

AC CHARACTERISTICS			Standard Operating Conditions: 2.4V to 3.6V (unless otherwise stated) Operating temperature -40°C ≤ TA ≤ +85°C for Industrial -40°C ≤ TA ≤ +125°C for Extended				
Param No.	**Symbol**	**Characteristic(1)**	**Min**	**Typ(2)**	**Max**	**Units**	**Conditions**
SP70	TscP	Maximum SCK Input Frequency	—	—	15	MHz	See **Note 3**
SP72	TscF	SCKx Input Fall Time	—	—	—	ns	See parameter DO32 and **Note 4**
SP73	TscR	SCKx Input Rise Time	—	—	—	ns	See parameter DO31 and **Note 4**
SP30	TdoF	SDOx Data Output Fall Time	—	—	—	ns	See parameter DO32 and **Note 4**
SP31	TdoR	SDOx Data Output Rise Time	—	—	—	ns	See parameter DO31 and **Note 4**
SP35	TscH2doV, TscL2doV	SDOx Data Output Valid after SCKx Edge	—	6	20	ns	—
SP36	TdoV2scH, TdoV2scL	SDOx Data Output Setup to First SCKx Edge	30	—	—	ns	—
SP40	TdiV2scH, TdiV2scL	Setup Time of SDIx Data Input to SCKx Edge	30	—	—	ns	—
SP41	TscH2diL, TscL2diL	Hold Time of SDIx Data Input to SCKx Edge	30	—	—	ns	—
SP50	TssL2scH, TssL2scL	$\overline{SSx}$ ↓ to SCKx ↑ or SCKx Input	120	—	—	ns	—
SP51	TssH2doZ	$\overline{SSx}$ ↑ to SDOx Output High-Impedance(4)	10	—	50	ns	—
SP52	TscH2ssH TscL2ssH	$\overline{SSx}$ after SCKx Edge	1.5 TCY + 40	—	—	ns	See **Note 4**

Note 1: These parameters are characterized, but are not tested in manufacturing.

2: Data in “Typ” column is at 3.3V, 25°C unless otherwise stated.

3: The minimum clock period for SCKx is 66.7 ns. Therefore, the SCK clock generated by the Master must not violate this specificiation.

4: Assumes 50 pF load on all SPIx pins.

FIGURE 25-16: SPIx SLAVE MODE (FULL-DUPLEX, CKE = 0, CKP = 0, SMP = 0) TIMING CHARACTERISTICS

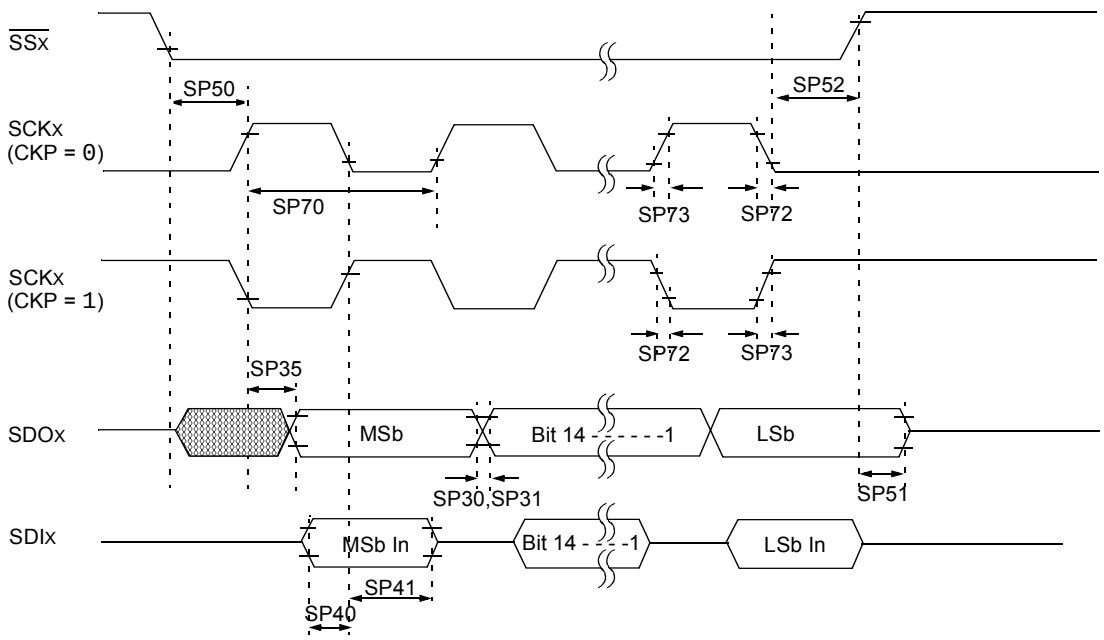

Note: Refer to Figure 25-1 for load conditions.

© 2009-2012 Microchip Technology Inc.

TABLE 25-35: SPIx SLAVE MODE (FULL-DUPLEX, CKE = 0, CKP = 0, SMP = 0) TIMING REQUIREMENTS

AC CHARACTERISTICS			Standard Operating Conditions: 2.4V to 3.6V (unless otherwise stated) Operating temperature -40°C ≤ TA ≤ +85°C for Industrial -40°C ≤ TA ≤ +125°C for Extended				
Param No.	**Symbol**	**Characteristic(1)**	**Min**	**Typ(2)**	**Max**	**Units**	**Conditions**
SP70	TscP	Maximum SCK Input Frequency	—	—	11	MHz	See **Note 3**
SP72	TscF	SCKx Input Fall Time	—	—	—	ns	See parameter DO32 and **Note 4**
SP73	TscR	SCKx Input Rise Time	—	—	—	ns	See parameter DO31 and **Note 4**
SP30	TdoF	SDOx Data Output Fall Time	—	—	—	ns	See parameter DO32 and **Note 4**
SP31	TdoR	SDOx Data Output Rise Time	—	—	—	ns	See parameter DO31 and **Note 4**
SP35	TscH2doV, TscL2doV	SDOx Data Output Valid after SCKx Edge	—	6	20	ns	—
SP36	TdoV2scH, TdoV2scL	SDOx Data Output Setup to First SCKx Edge	30	—	—	ns	—
SP40	TdiV2scH, TdiV2scL	Setup Time of SDIx Data Input to SCKx Edge	30	—	—	ns	—
SP41	TscH2diL, TscL2diL	Hold Time of SDIx Data Input to SCKx Edge	30	—	—	ns	—
SP50	TssL2scH, TssL2scL	$\overline{SSx}$ ↓ to SCKx ↑ or SCKx Input	120	—	—	ns	—
SP51	TssH2doZ	$\overline{SSx}$ ↑ to SDOx Output High-Impedance(4)	10	—	50	ns	—
SP52	TscH2ssH TscL2ssH	$\overline{SSx}$ after SCKx Edge	1.5 TCY + 40	—	—	ns	See **Note 4**

Note 1: These parameters are characterized, but are not tested in manufacturing.

2: Data in “Typ” column is at 3.3V, 25°C unless otherwise stated.

3: The minimum clock period for SCKx is 91 ns. Therefore, the SCK clock generated by the Master must not violate this specificiation.

4: Assumes 50 pF load on all SPIx pins.

FIGURE 25-17: I2Cx BUS START/STOP BITS TIMING CHARACTERISTICS (MASTER MODE)

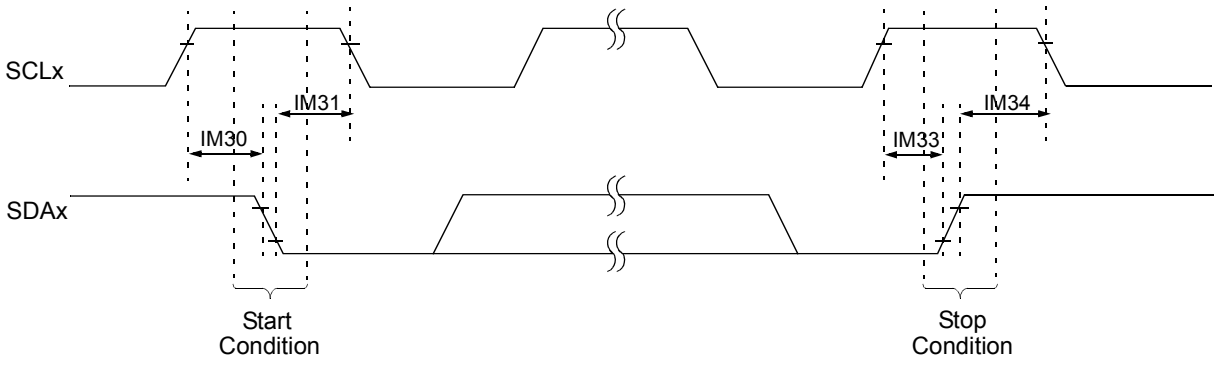

Note: Refer to Figure 25-1 for load conditions.

FIGURE 25-18: I2Cx BUS DATA TIMING CHARACTERISTICS (MASTER MODE)

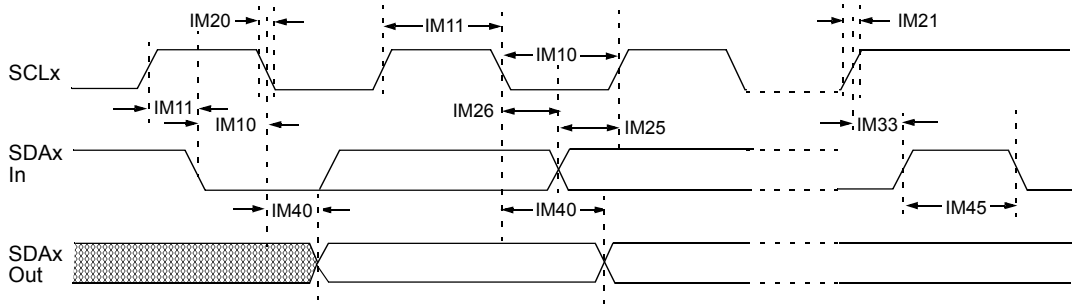

Note: Refer to Figure 25-1 for load conditions.

© 2009-2012 Microchip Technology Inc.

TABLE 25-36: I2Cx BUS DATA TIMING REQUIREMENTS (MASTER MODE)

AC CHARACTERISTICS				Standard Operating Conditions: 3.0V to 3.6V (unless otherwise stated) Operating temperature -40°C ≤ TA ≤ +85°C -40°C ≤ TA ≤ +125°C for Extended			
Param No.	**Symbol**	**Characteristic**		**Min(1)**	**Max**	**Units**	**Conditions**
IM10	TLO:SCL	Clock Low Time	100 kHz mode	TCY/2 (BRG + 1)	—	μs	—
			400 kHz mode	TCY/2 (BRG + 1)	—	μs	—
			1 MHz mode(2)	TCY/2 (BRG + 1)	—	μs	—
IM11	THI:SCL	Clock High Time	100 kHz mode	TCY/2 (BRG + 1)	—	μs	—
			400 kHz mode	TCY/2 (BRG + 1)	—	μs	—
			1 MHz mode(2)	TCY/2 (BRG + 1)	—	μs	—
IM20	TF:SCL	SDAx and SCLx Fall Time	100 kHz mode	—	300	ns	CB is specified to be from 10 to 400 pF
			400 kHz mode	20 + 0.1 CB	300	ns	
			1 MHz mode(2)	—	100	ns	
IM21	TR:SCL	SDAx and SCLx Rise Time	100 kHz mode	—	1000	ns	CB is specified to be from 10 to 400 pF
			400 kHz mode	20 + 0.1 CB	300	ns	
			1 MHz mode(2)	—	300	ns	
IM25	TSU:DAT	Data Input Setup Time	100 kHz mode	250	—	ns	—
			400 kHz mode	100	—	ns	
			1 MHz mode(2)	40	—	ns	
IM26	THD:DAT	Data Input Hold Time	100 kHz mode	0	—	μs	—
			400 kHz mode	0	0.9	μs	
			1 MHz mode(2)	0.2	—	μs	
IM30	TSU:STA	Start Condition Setup Time	100 kHz mode	TCY/2 (BRG + 1)	—	μs	Only relevant for Repeated Start condition
			400 kHz mode	TCY/2 (BRG + 1)	—	μs	
			1 MHz mode(2)	TCY/2 (BRG + 1)	—	μs	
IM31	THD:STA	Start Condition Hold Time	100 kHz mode	TCY/2 (BRG + 1)	—	μs	After this period the first clock pulse is generated
			400 kHz mode	TCY/2 (BRG + 1)	—	μs	
			1 MHz mode(2)	TCY/2 (BRG + 1)	—	μs	
IM33	TSU:STO	Stop Condition Setup Time	100 kHz mode	TCY/2 (BRG + 1)	—	μs	—
			400 kHz mode	TCY/2 (BRG + 1)	—	μs	
			1 MHz mode(2)	TCY/2 (BRG + 1)	—	μs	
IM34	THD:STO	Stop Condition Hold Time	100 kHz mode	TCY/2 (BRG + 1)	—	ns	—
			400 kHz mode	TCY/2 (BRG + 1)	—	ns	
			1 MHz mode(2)	TCY/2 (BRG + 1)	—	ns	
IM40	TAA:SCL	Output Valid From Clock	100 kHz mode	—	3500	ns	—
			400 kHz mode	—	1000	ns	—
			1 MHz mode(2)	—	400	ns	—

Note 1: BRG is the value of the I^2C Baud Rate Generator. Refer to **Section 19. "Inter-Integrated Circuit™ (I^2C™)"** (DS70195) in the "*dsPIC33F/PIC24H Family Reference Manual*".

2: Maximum pin capacitance = 10 pF for all I2Cx pins (for 1 MHz mode only).

3: Typical value for this parameter is 130 ns.

TABLE 25-36: I2Cx BUS DATA TIMING REQUIREMENTS (MASTER MODE)

AC CHARACTERISTICS				Standard Operating Conditions: 3.0V to 3.6V (unless otherwise stated) Operating temperature -40°C ≤ TA ≤ +85°C -40°C ≤ TA ≤ +125°C for Extended			
Param No.	**Symbol**	**Characteristic**		**Min(1)**	**Max**	**Units**	**Conditions**
IM45	TBF:SDA	Bus Free Time	100 kHz mode	4.7	—	μs	Time the bus must be free before a new transmission can start
			400 kHz mode	1.3	—	μs	
			1 MHz mode(2)	0.5	—	μs	
IM50	CB	Bus Capacitive Loading		—	400	pF	—
IM51	TPGD	Pulse Gobbler Delay		65	390	ns	**See Note 3**

Note 1: BRG is the value of the I^{2}C Baud Rate Generator. Refer to **Section 19. "Inter-Integrated Circuit™ (I^{2}C™)"** (DS70195) in the "*dsPIC33F/PIC24H Family Reference Manual*".

2: Maximum pin capacitance = 10 pF for all I2Cx pins (for 1 MHz mode only).

3: Typical value for this parameter is 130 ns.

FIGURE 25-19: I2Cx BUS START/STOP BITS TIMING CHARACTERISTICS (SLAVE MODE)

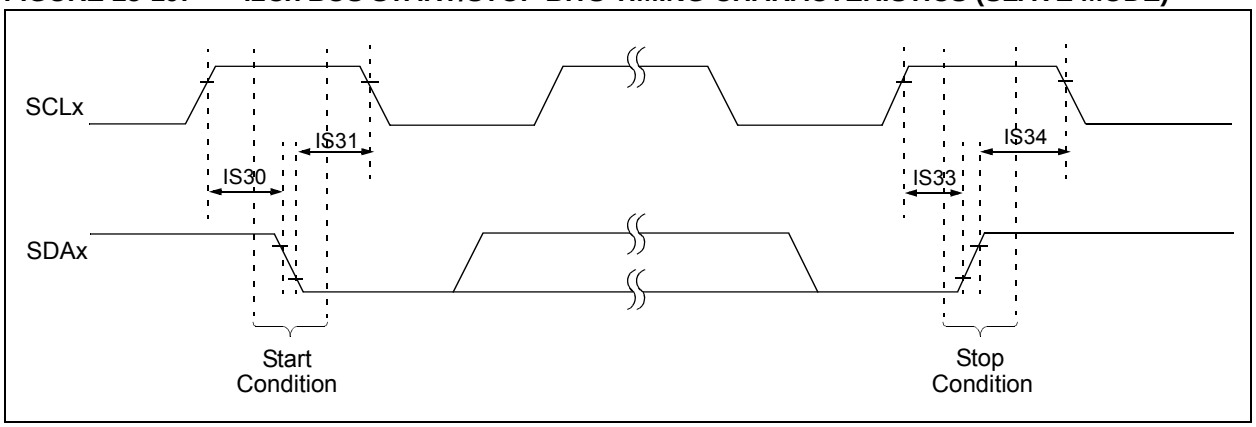

FIGURE 25-20: I2Cx BUS DATA TIMING CHARACTERISTICS (SLAVE MODE)

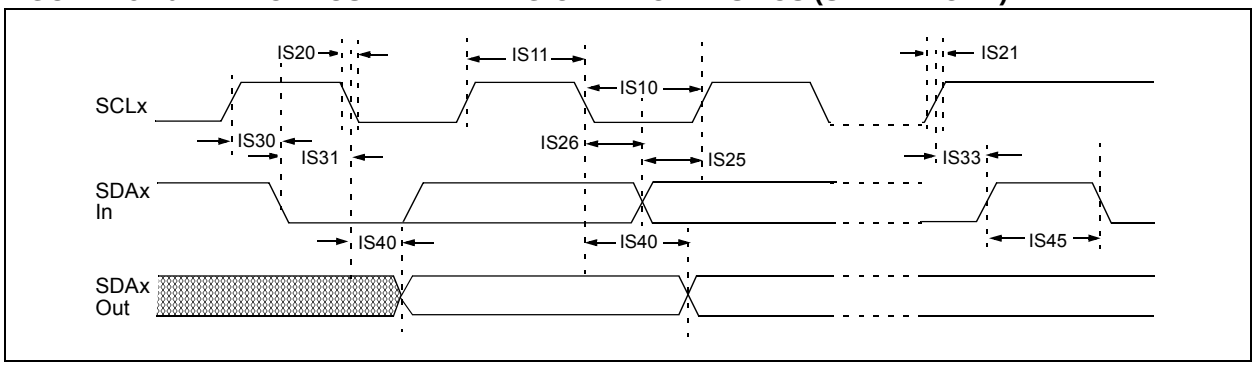

© 2009-2012 Microchip Technology Inc.

TABLE 25-37: I2Cx BUS DATA TIMING REQUIREMENTS (SLAVE MODE)

AC CHARACTERISTICS				Standard Operating Conditions: 3.0V to 3.6V (unless otherwise stated) Operating temperature -40°C ≤ TA ≤ +85°C for Industrial -40°C ≤ TA ≤ +125°C for Extended			
Param No.	**Symbol**	**Characteristic**		**Min**	**Max**	**Units**	**Conditions**
IS10	TLO:SCL	Clock Low Time	100 kHz mode	4.7	—	μs	Device must operate at a minimum of 1.5 MHz
			400 kHz mode	1.3	—	μs	Device must operate at a minimum of 10 MHz
			1 MHz mode(1)	0.5	—	μs	—
IS11	THI:SCL	Clock High Time	100 kHz mode	4.0	—	μs	Device must operate at a minimum of 1.5 MHz
			400 kHz mode	0.6	—	μs	Device must operate at a minimum of 10 MHz
			1 MHz mode(1)	0.5	—	μs	—
IS20	TF:SCL	SDAx and SCLx Fall Time	100 kHz mode	—	300	ns	CB is specified to be from 10 to 400 pF
			400 kHz mode	20 + 0.1 CB	300	ns	
			1 MHz mode(1)	—	100	ns	
IS21	TR:SCL	SDAx and SCLx Rise Time	100 kHz mode	—	1000	ns	CB is specified to be from 10 to 400 pF
			400 kHz mode	20 + 0.1 CB	300	ns	
			1 MHz mode(1)	—	300	ns	
IS25	TSU:DAT	Data Input Setup Time	100 kHz mode	250	—	ns	—
			400 kHz mode	100	—	ns	
			1 MHz mode(1)	100	—	ns	
IS26	THD:DAT	Data Input Hold Time	100 kHz mode	0	—	μs	—
			400 kHz mode	0	0.9	μs	
			1 MHz mode(1)	0	0.3	μs	
IS30	TSU:STA	Start Condition Setup Time	100 kHz mode	4.7	—	μs	Only relevant for Repeated Start condition
			400 kHz mode	0.6	—	μs	
			1 MHz mode(1)	0.25	—	μs	
IS31	THD:STA	Start Condition Hold Time	100 kHz mode	4.0	—	μs	After this period, the first clock pulse is generated
			400 kHz mode	0.6	—	μs	
			1 MHz mode(1)	0.25	—	μs	
IS33	TSU:STO	Stop Condition Setup Time	100 kHz mode	4.7	—	μs	—
			400 kHz mode	0.6	—	μs	
			1 MHz mode(1)	0.6	—	μs	
IS34	THD:STO	Stop Condition Hold Time	100 kHz mode	4000	—	ns	—
			400 kHz mode	600	—	ns	
			1 MHz mode(1)	250		ns	
IS40	TAA:SCL	Output Valid From Clock	100 kHz mode	0	3500	ns	—
			400 kHz mode	0	1000	ns	
			1 MHz mode(1)	0	350	ns	
IS45	TBF:SDA	Bus Free Time	100 kHz mode	4.7	—	μs	Time the bus must be free before a new transmission can start
			400 kHz mode	1.3	—	μs	
			1 MHz mode(1)	0.5	—	μs	
IS50	CB	Bus Capacitive Loading		—	400	pF	—

Note 1: Maximum pin capacitance = 10 pF for all I2Cx pins (for 1 MHz mode only).

FIGURE 25-21: DCI MODULE (MULTI-CHANNEL, I²S MODES) TIMING CHARACTERISTICS

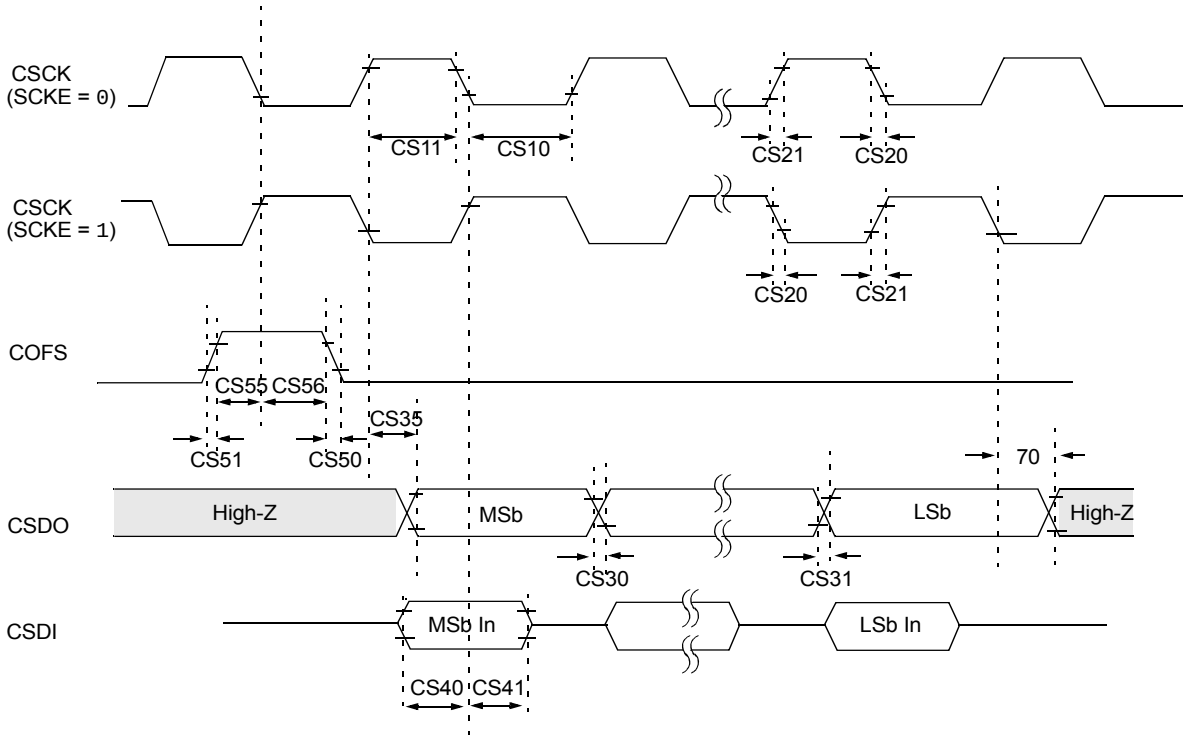

Note: Refer to Figure 25-1 for load conditions.

© 2009-2012 Microchip Technology Inc.

TABLE 25-38: DCI MODULE (MULTI-CHANNEL, I²S MODES) TIMING REQUIREMENTS

AC CHARACTERISTICS			Standard Operating Conditions: 3.0V to 3.6V (unless otherwise stated) Operating temperature -40°C ≤ TA ≤ +85°C for Industrial -40°C ≤ TA ≤ +125°C for Extended				
Param No.	**Symbol**	**Characteristic(1)**	**Min**	**Typ(2)**	**Max**	**Units**	**Conditions**
CS10	TCSCKL	CSCK Input Low Time (CSCK pin is an input)	TCY/2 + 20	—	—	ns	—
		CSCK Output Low Time(3) (CSCK pin is an output)	30	—	—	ns	—
CS11	TCSCKH	CSCK Input High Time (CSCK pin is an input)	TCY/2 + 20	—	—	ns	—
		CSCK Output High Time(3) (CSCK pin is an output)	30	—	—	ns	—
CS20	TCSCKF	CSCK Output Fall Time(4) (CSCK pin is an output)	—	10	25	ns	—
CS21	TCSCKR	CSCK Output Rise Time(4) (CSCK pin is an output)	—	10	25	ns	—
CS30	TCSDOF	CSDO Data Output Fall Time(4)	—	10	25	ns	—
CS31	TCSDOR	CSDO Data Output Rise Time(4)	—	10	25	ns	—
CS35	TDV	Clock Edge to CSDO Data Valid	—	—	10	ns	—
CS36	TDIV	Clock Edge to CSDO Tri-Stated	10	—	20	ns	—
CS40	TCSDI	Setup Time of CSDI Data Input to CSCK Edge (CSCK pin is input or output)	20	—	—	ns	—
CS41	THCSDI	Hold Time of CSDI Data Input to CSCK Edge (CSCK pin is input or output)	20	—	—	ns	—
CS50	TCOFSF	COFS Fall Time (COFS pin is output)	—	10	25	ns	**Note 1**
CS51	TCOFSR	COFS Rise Time (COFS pin is output)	—	10	25	ns	**Note 1**
CS55	TSCOFS	Setup Time of COFS Data Input to CSCK Edge (COFS pin is input)	20	—	—	ns	—
CS56	THCOFS	Hold Time of COFS Data Input to CSCK Edge (COFS pin is input)	20	—	—	ns	—

Note 1: These parameters are characterized but not tested in manufacturing.

2: Data in “Typ” column is at 3.3V, 25°C unless otherwise stated. Parameters are for design guidance only and are not tested.

3: The minimum clock period for CSCK is 100 ns. Therefore, the clock generated in Master mode must not violate this specification.

4: Assumes 50 pF load on all DCI pins.

FIGURE 25-22: DCI MODULE (AC-LINK MODE) TIMING CHARACTERISTICS

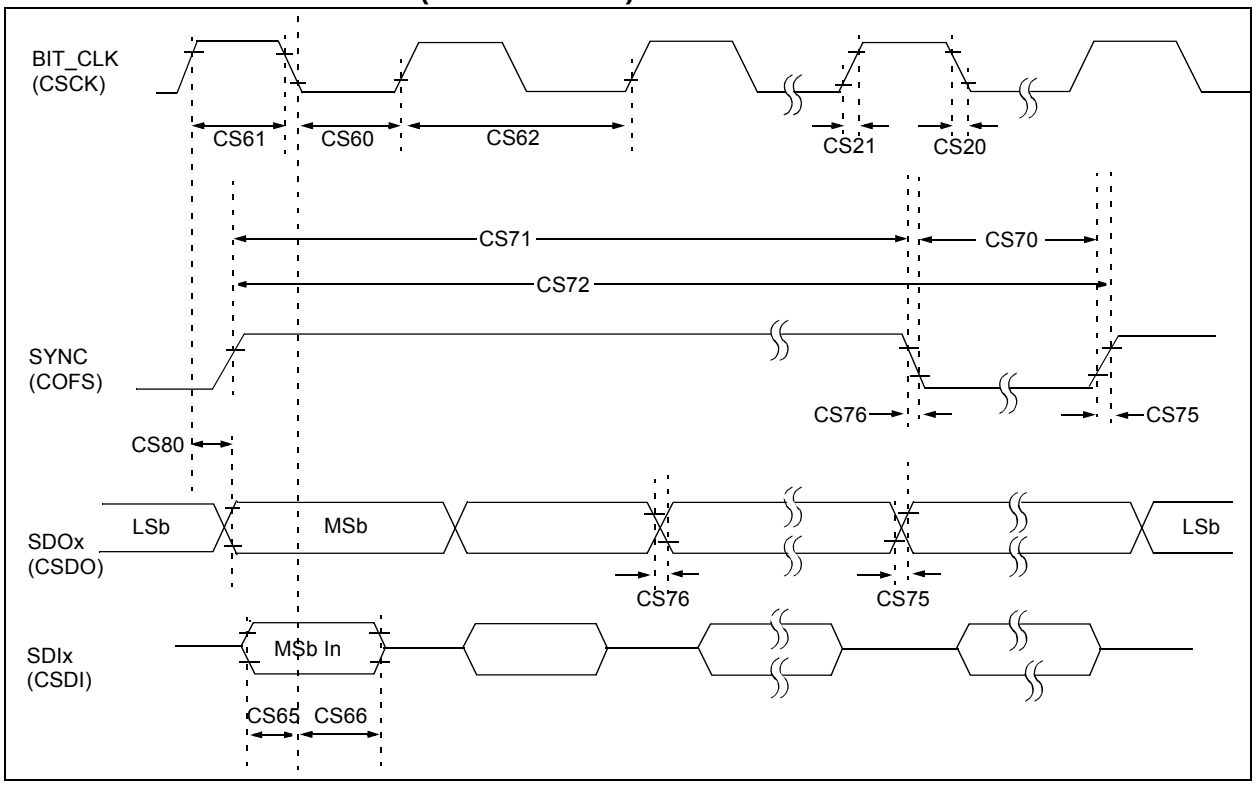

TABLE 25-39: DCI MODULE (AC-LINK MODE) TIMING REQUIREMENTS

AC CHARACTERISTICS			Standard Operating Conditions: 3.0V to 3.6V (unless otherwise stated) Operating temperature -40°C ≤ TA ≤ +85°C -40°C ≤ TA ≤ +125°C for Extended				
Param No.	**Symbol**	**Characteristic(1,2)**	**Min**	**Typ(3)**	**Max**	**Units**	**Conditions**
CS60	TBCLKL	BIT_CLK Low Time	36	40.7	45	ns	—
CS61	TBCLKH	BIT_CLK High Time	36	40.7	45	ns	—
CS62	TBCLK	BIT_CLK Period	—	81.4	—	ns	Bit clock is input
CS65	TSACL	Input Setup Time to Falling Edge of BIT_CLK	—	—	10	ns	—
CS66	THACL	Input Hold Time from Falling Edge of BIT_CLK	—	—	10	ns	—
CS70	TSYNCLO	SYNC Data Output Low Time	—	19.5	—	μs	**Note 1**
CS71	TSYNCHI	SYNC Data Output High Time	—	1.3	—	μs	**Note 1**
CS72	TSYNC	SYNC Data Output Period	—	20.8	—	μs	**Note 1**
CS75	TRACL	Rise Time, SYNC, SDATA_OUT	—	10	25	ns	CLOAD = 50 pF, VDD = 5V
CS76	TFACL	Fall Time, SYNC, SDATA_OUT	—	10	25	ns	CLOAD = 50 pF, VDD = 5V
CS77	TRACL	Rise Time, SYNC, SDATA_OUT	—	—	30	ns	CLOAD = 50 pF, VDD = 3V
CS78	TFACL	Fall Time, SYNC, SDATA_OUT	—	—	30	ns	CLOAD = 50 pF, VDD = 3V
CS80	TOVDACL	Output Valid Delay from Rising Edge of BIT_CLK	—	—	15	ns	—

Note 1: These parameters are characterized but not tested in manufacturing.

2: These values assume BIT_CLK frequency is 12.288 MHz.

3: Data in “Typ” column is at 3.3V, 25°C unless otherwise stated. Parameters are for design guidance only and are not tested.

© 2009-2012 Microchip Technology Inc.

FIGURE 25-23: CAN MODULE I/O TIMING CHARACTERISTICS

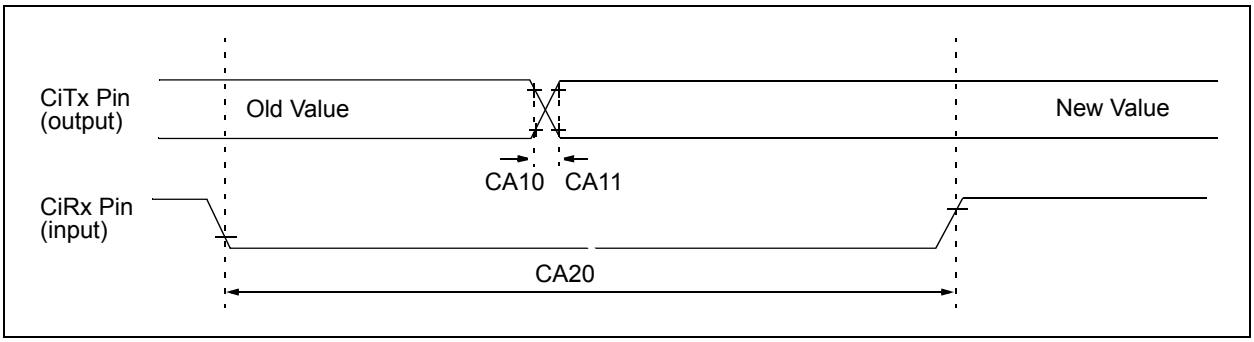

TABLE 25-40: ECAN™ MODULE I/O TIMING REQUIREMENTS

AC CHARACTERISTICS			Standard Operating Conditions: 3.0V to 3.6V (unless otherwise stated) Operating temperature -40°C ≤ TA ≤ +85°C -40°C ≤ TA ≤ +125°C for Extended				
Param No.	**Symbol**	**Characteristic(1)**	**Min**	**Typ**	**Max**	**Units**	**Conditions**
CA10	TioF	Port Output Fall Time	—	—	—	ns	See parameter D032
CA11	TioR	Port Output Rise Time	—	—	—	ns	See parameter D031
CA20	Tcwf	Pulse Width to Trigger CAN Wake-up Filter	120	—	—	ns	—

Note 1: These parameters are characterized but not tested in manufacturing.

TABLE 25-41: ADC MODULE SPECIFICATIONS

AC CHARACTERISTICS			Standard Operating Conditions: 3.0V to 3.6V (unless otherwise stated) Operating temperature -40°C ≤ TA ≤ +85°C for Industrial -40°C ≤ TA ≤ +125°C for Extended				
Param No.	**Symbol**	**Characteristic**	**Min.**	**Typ**	**Max.**	**Units**	**Conditions**
Device Supply							
AD01	AVDD	Module VDD Supply	Greater of VDD - 0.3 or 3.0	—	Lesser of VDD + 0.3 or 3.6	V	—
AD02	AVSS	Module VSS Supply	VSS - 0.3	—	VSS + 0.3	V	—
Reference Inputs							
AD05	VREFH	Reference Voltage High	AVSS + 2.5	—	AVDD	V	
AD05a			3.0	—	3.6	V	VREFH = AVDD VREFL = AVSS = 0
AD06	VREFL	Reference Voltage Low	AVSS	—	AVDD - 2.5	V	
AD06a			0	—	0	V	VREFH = AVDD VREFL = AVSS = 0
AD07	VREF	Absolute Reference Voltage	2.5	—	3.6	V	VREF = VREFH - VREFL
AD08	IREF	Current Drain	—	—	1	μA	ADC off
AD08a	IAD	Operating Current	— —	7.0 2.7	9.0 3.2	mA mA	10-bit ADC mode, See **Note 1** 12-bit ADC mode, See **Note 1**
Analog Input							
AD12	VINH	Input Voltage Range VINH	VINL	—	VREFH	V	This voltage reflects Sample and Hold Channels 0, 1, 2, and 3 (CH0-CH3), positive input.
AD13	VINL	Input Voltage Range VINL	VREFL	—	AVSS + 1V	V	This voltage reflects Sample and Hold Channels 0, 1, 2, and 3 (CH0-CH3), negative input.
AD17	RIN	Recommended Impedance of Analog Voltage Source	—	—	200 200	Ω Ω	10-bit 12-bit

Note 1: These parameters are not characterized or tested in manufacturing.

© 2009-2012 Microchip Technology Inc.

TABLE 25-42: ADC MODULE SPECIFICATIONS (12-BIT MODE)(2)

AC CHARACTERISTICS			Standard Operating Conditions: 3.0V to 3.6V (unless otherwise stated) Operating temperature -40°C ≤ TA ≤ +85°C for Industrial -40°C ≤ TA ≤ +125°C for Extended				
Param No.	**Symbol**	**Characteristic**	**Min.**	**Typ**	**Max.**	**Units**	**Conditions**
ADC Accuracy (12-bit Mode) - Measurements with external VREF+/VREF-							
AD20a	Nr	Resolution	12 data bits			bits	
AD21a	INL	Integral Nonlinearity	-2	—	+2	LSb	VINL = AVSS = VREFL = 0V, AVDD = VREFH = 3.6V
AD22a	DNL	Differential Nonlinearity	>-1	—	<1	LSb	VINL = AVSS = VREFL = 0V, AVDD = VREFH = 3.6V
AD23a	GERR	Gain Error	—	3.4	10	LSb	VINL = AVSS = VREFL = 0V, AVDD = VREFH = 3.6V
AD24a	EOFF	Offset Error	—	0.9	5	LSb	VINL = AVSS = VREFL = 0V, AVDD = VREFH = 3.6V
AD25a	—	Monotonicity(1)	—	—	—	—	Guaranteed
ADC Accuracy (12-bit Mode) - Measurements with internal VREF+/VREF-							
AD20a	Nr	Resolution	12 data bits			bits	
AD21a	INL	Integral Nonlinearity	-2	—	+2	LSb	VINL = AVSS = VREFL = 0V, AVDD = VREFH = 3.6V
AD22a	DNL	Differential Nonlinearity	>-1	—	<1	LSb	VINL = AVSS = VREFL = 0V, AVDD = VREFH = 3.6V
AD23a	GERR	Gain Error	—	10.5	20	LSb	VINL = AVSS = VREFL = 0V, AVDD = VREFH = 3.6V
AD24a	EOFF	Offset Error	—	3.8	10	LSb	VINL = AVSS = VREFL = 0V, AVDD = VREFH = 3.6V
AD25a	—	Monotonicity(1)	—	—	—	—	Guaranteed
Dynamic Performance (12-bit Mode)							
AD30a	THD	Total Harmonic Distortion	—	—	-75	dB	—
AD31a	SINAD	Signal to Noise and Distortion	68.5	69.5	—	dB	—
AD32a	SFDR	Spurious Free Dynamic Range	80	—	—	dB	—
AD33a	FNYQ	Input Signal Band-Width	—	—	250	kHz	—
AD34a	ENOB	Effective Number of Bits	11.09	11.3	—	bits	—

Note 1: The ADC conversion result never decreases with an increase in the input voltage, and has no missing codes.

2: Injection currents > | 0 | can affect the ADC results by approximately 4-6 counts.

TABLE 25-43: ADC MODULE SPECIFICATIONS (10-BIT MODE)(2)

AC CHARACTERISTICS			Standard Operating Conditions: 3.0V to 3.6V (unless otherwise stated) Operating temperature -40°C ≤ TA ≤ +85°C for Industrial -40°C ≤ TA ≤ +125°C for Extended				
Param No.	**Symbol**	**Characteristic**	**Min.**	**Typ**	**Max.**	**Units**	**Conditions**
ADC Accuracy (10-bit Mode) - Measurements with external VREF+/VREF-							
AD20b	Nr	Resolution	10 data bits			bits	
AD21b	INL	Integral Nonlinearity	-1.5	—	+1.5	LSb	VINL = AVSS = VREFL = 0V, AVDD = VREFH = 3.6V
AD22b	DNL	Differential Nonlinearity	>-1	—	<1	LSb	VINL = AVSS = VREFL = 0V, AVDD = VREFH = 3.6V
AD23b	GERR	Gain Error	—	3	6	LSb	VINL = AVSS = VREFL = 0V, AVDD = VREFH = 3.6V
AD24b	EOFF	Offset Error	—	2	5	LSb	VINL = AVSS = VREFL = 0V, AVDD = VREFH = 3.6V
AD25b	—	Monotonicity(1)	—	—	—	—	Guaranteed
ADC Accuracy (10-bit Mode) - Measurements with internal VREF+/VREF-							
AD20b	Nr	Resolution	10 data bits			bits	
AD21b	INL	Integral Nonlinearity	-1	—	+1	LSb	VINL = AVSS = VREFL = 0V, AVDD = VREFH = 3.6V
AD22b	DNL	Differential Nonlinearity	>-1	—	<1	LSb	VINL = AVSS = VREFL = 0V, AVDD = VREFH = 3.6V
AD23b	GERR	Gain Error	—	7	15	LSb	VINL = AVSS = VREFL = 0V, AVDD = VREFH = 3.6V
AD24b	EOFF	Offset Error	—	3	7	LSb	VINL = AVSS = VREFL = 0V, AVDD = VREFH = 3.6V
AD25b	—	Monotonicity(1)	—	—	—	—	Guaranteed
Dynamic Performance (10-bit Mode)							
AD30b	THD	Total Harmonic Distortion	—	—	-64	dB	—
AD31b	SINAD	Signal to Noise and Distortion	57	58.5	—	dB	—
AD32b	SFDR	Spurious Free Dynamic Range	72	—	—	dB	—
AD33b	FNYQ	Input Signal Bandwidth	—	—	550	kHz	—
AD34b	ENOB	Effective Number of Bits	9.16	9.4	—	bits	—

Note 1: The ADC conversion result never decreases with an increase in the input voltage, and has no missing codes.

2: Injection currents > | 0 | can affect the ADC results by approximately 4-6 counts.

© 2009-2012 Microchip Technology Inc.

FIGURE 25-24: ADC CONVERSION (12-BIT MODE) TIMING CHARACTERISTICS (ASAM = 0, SSRC<2:0> = 000)

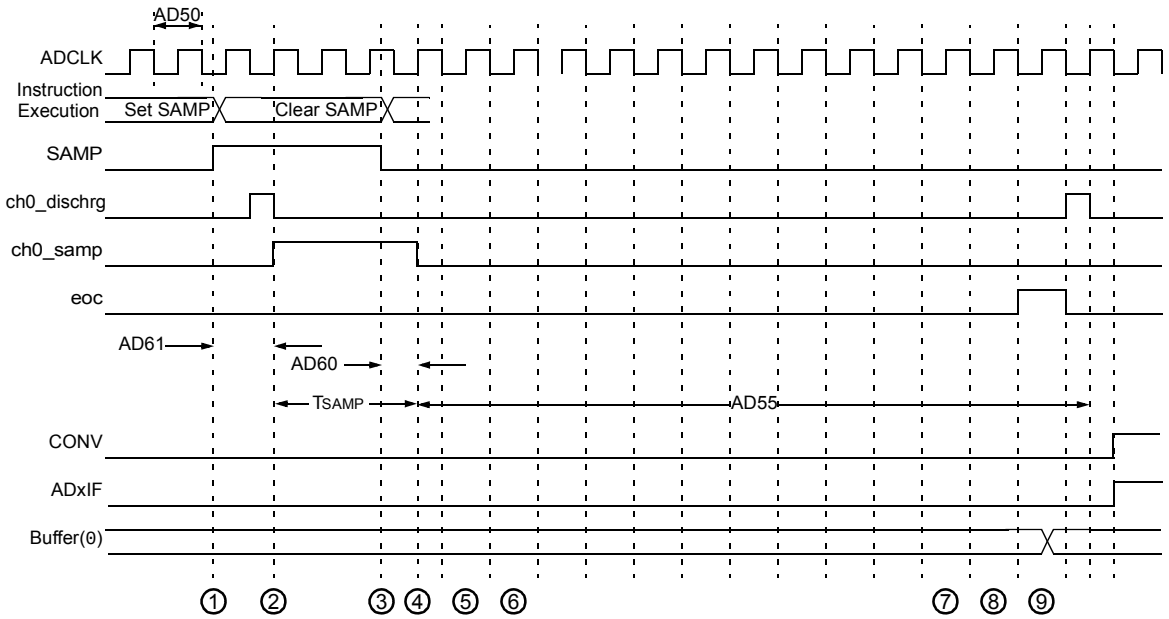

1. – Software sets ADxCON. SAMP to start sampling.
2. – Sampling starts after discharge period. TSAMP is described in **Section 16. "Analog-to-Digital Converter (ADC) with DMA"** (DS70183) in the *"dsPIC33F/PIC24H Family Reference Manual"*.
3. – Software clears ADxCON. SAMP to start conversion.
4. – Sampling ends, conversion sequence starts.
5. – Convert bit 11.
6. – Convert bit 10.
7. – Convert bit 1.
8. – Convert bit 0.
9. – One TAD for end of conversion.

TABLE 25-44: ADC CONVERSION (12-BIT MODE) TIMING REQUIREMENTS

AC CHARACTERISTICS			Standard Operating Conditions: 3.0V to 3.6V (unless otherwise stated) Operating temperature -40°C ≤ TA ≤ +85°C for Industrial -40°C ≤ TA ≤ +125°C for Extended				
Param No.	**Symbol**	**Characteristic**	**Min.**	**Typ(1)**	**Max.**	**Units**	**Conditions**
Clock Parameters							
AD50a	TAD	ADC Clock Period	117.6	—	—	ns	—
AD51a	tRC	ADC Internal RC Oscillator Period	—	250	—	ns	—
Conversion Rate							
AD55a	tCONV	Conversion Time	—	14 TAD		ns	—
AD56a	FCNV	Throughput Rate	—	—	500	ksps	—
AD57a	tSAMP	Sample Time	3 TAD	—	—	—	—
Timing Parameters							
AD60a	tPCS	Conversion Start from Sample Trigger(2)	2.0 TAD	—	3.0 TAD	—	Auto-Convert Trigger (SSRC<2:0> = 111) not selected
AD61a	tPSS	Sample Start from Setting Sample (SAMP) bit(2)	2.0 TAD	—	3.0 TAD	—	—
AD62a	tCSS	Conversion Completion to Sample Start (ASAM = 1)(2)	—	0.5 TAD	—	—	—
AD63a	tDPU	Time to Stabilize Analog Stage from ADC Off to ADC On(2,3)	—	—	20	μs	—

Note 1: These parameters are characterized but not tested in manufacturing.

2: Because the sample caps will eventually lose charge, clock rates below 10 kHz can affect linearity performance, especially at elevated temperatures.

3: tDPU is the time required for the ADC module to stabilize when it is turned on (AD1CON1<ADON> = 1). During this time, the ADC result is indeterminate.

© 2009-2012 Microchip Technology Inc.

FIGURE 25-25: ADC CONVERSION (10-BIT MODE) TIMING CHARACTERISTICS (CHPS<1:0> = 01, SIMSAM = 0, ASAM = 0, SSRC<2:0> = 000)

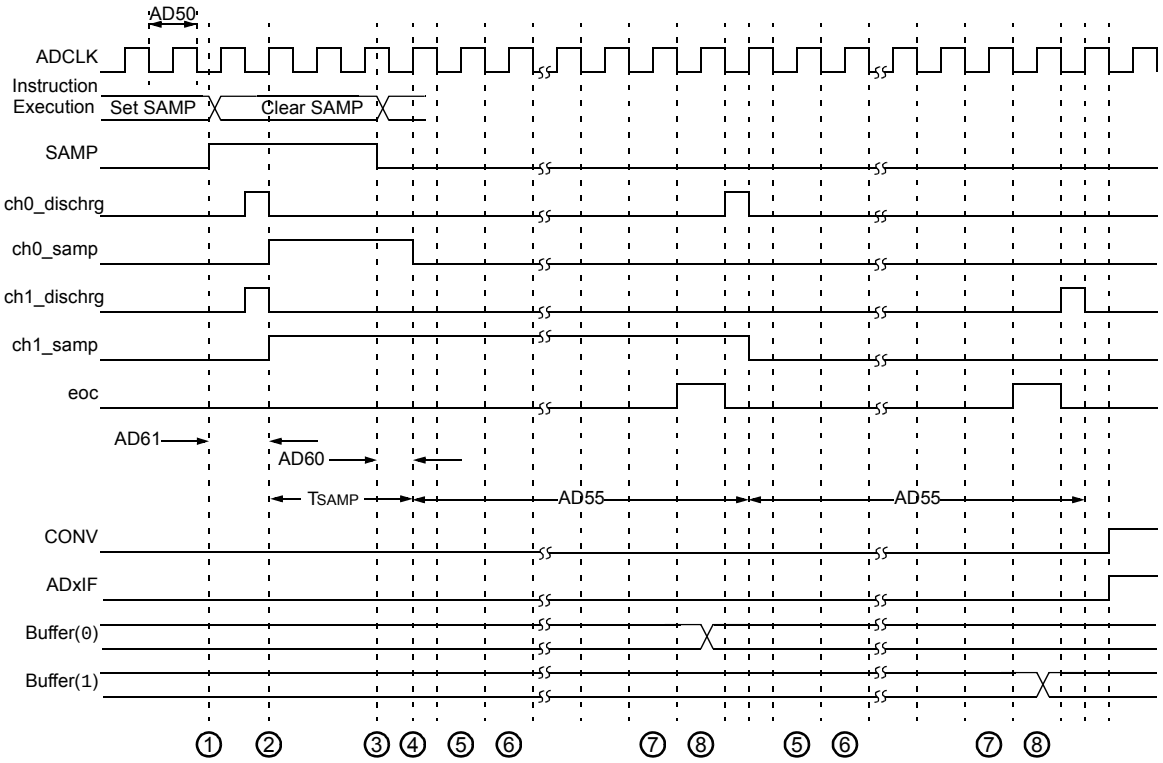

1. – Software sets ADxCON. SAMP to start sampling.
2. – Sampling starts after discharge period. TSAMP is described in **Section 16. "Analog-to-Digital Converter (ADC)"** (DS70183) in the *"dsPIC33F/PIC24H Family Reference Manual"*.
3. – Software clears ADxCON. SAMP to start conversion.
4. – Sampling ends, conversion sequence starts.
5. – Convert bit 9.
6. – Convert bit 8.
7. – Convert bit 0.
8. – One TAD for end of conversion.

FIGURE 25-26: ADC CONVERSION (10-BIT MODE) TIMING CHARACTERISTICS (CHPS<1:0> = 01, SIMSAM = 0, ASAM = 1, SSRC<2:0> = 111, SAMC<4:0> = 00001)

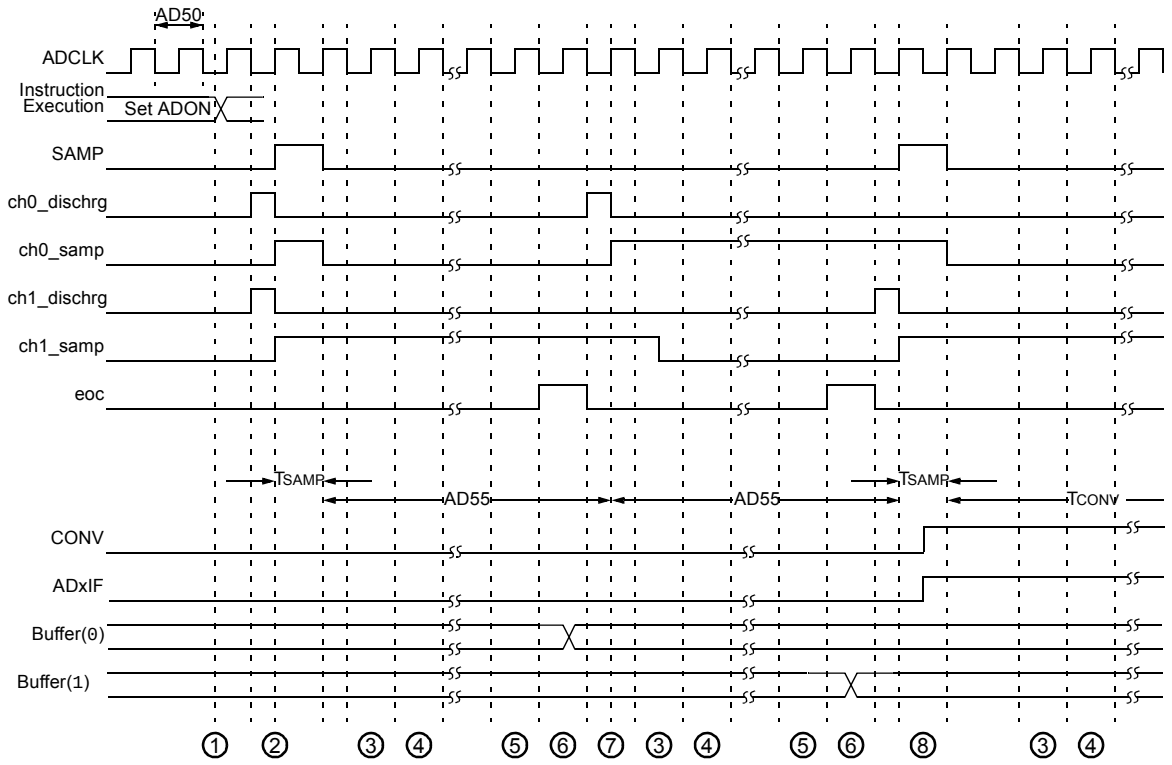

1 – Software sets ADxCON. ADON to start AD operation.

2 – Sampling starts after discharge period.
TSAMP is described in **Section 16. "Analog-to-Digital Converter (ADC)"** (DS70183) in the *"dsPIC33F/PIC24H Family Reference Manual"*.

3 – Convert bit 9.

4 – Convert bit 8.

5 – Convert bit 0.

6 – One TAD for end of conversion.

7 – Begin conversion of next channel.

8 – Sample for time specified by SAMC<4:0>.

© 2009-2012 Microchip Technology Inc.

TABLE 25-45: ADC CONVERSION (10-BIT MODE) TIMING REQUIREMENTS

AC CHARACTERISTICS			Standard Operating Conditions: 3.0V to 3.6V (unless otherwise stated) Operating temperature -40°C ≤ TA ≤ +85°C for Industrial -40°C ≤ TA ≤ +125°C for Extended				
Param No.	**Symbol**	**Characteristic**	**Min.**	**Typ(1)**	**Max.**	**Units**	**Conditions**
Clock Parameters							
AD50b	TAD	ADC Clock Period	76	—	—	ns	—
AD51b	TRC	ADC Internal RC Oscillator Period	—	250	—	ns	—
Conversion Rate							
AD55b	TCONV	Conversion Time	—	12 TAD	—	—	—
AD56b	FCNV	Throughput Rate	—	—	1.1	Msps	—
AD57b	TSAMP	Sample Time	2 TAD	—	—	—	—
Timing Parameters							
AD60b	TPCS	Conversion Start from Sample Trigger(2)	2.0 TAD	—	3.0 TAD	—	Auto-Convert Trigger (SSRC<2:0> = 111) not selected
AD61b	TPSS	Sample Start from Setting Sample (SAMP) bit(2)	2.0 TAD	—	3.0 TAD	—	—
AD62b	TCSS	Conversion Completion to Sample Start (ASAM = 1)(2)	—	0.5 TAD	—	—	—
AD63b	TDPU	Time to Stabilize Analog Stage from ADC Off to ADC On(2,3)	—	—	20	μs	—

Note 1: These parameters are characterized but not tested in manufacturing.

2: Because the sample caps will eventually lose charge, clock rates below 10 kHz can affect linearity performance, especially at elevated temperatures.

3: TDPU is the time required for the ADC module to stabilize when it is turned on (AD1CON1<ADON> = 1). During this time, the ADC result is indeterminate.

TABLE 25-46: DMA READ/WRITE TIMING REQUIREMENTS

AC CHARACTERISTICS		Standard Operating Conditions: 3.0V to 3.6V (unless otherwise stated) Operating temperature -40°C ≤ TA ≤ +85°C for Industrial -40°C ≤ TA ≤ +125°C for Extended				
Param No.	**Characteristic**	**Min.**	**Typ**	**Max.**	**Units**	**Conditions**
DM1a	DMA Read/Write Cycle Time	—	—	2 TCY	ns	This characteristic applies to dsPIC33FJ256GPX06A/X08A/X10A devices only.
DM1b	DMA Read/Write Cycle Time	—	—	1 TCY	ns	This characteristic applies to all devices with the exception of the dsPIC33FJ256GPX06A/X08A/X10A.

NOTES:

© 2009-2012 Microchip Technology Inc.

26.0 HIGH TEMPERATURE ELECTRICAL CHARACTERISTICS

This section provides an overview of dsPIC33FJXXXGPX06A/X08A/X10A electrical characteristics for devices operating in an ambient temperature range of -40°C to +150°C.

The specifications between -40°C to +150°C are identical to those shown in **Section 25.0 "Electrical Characteristics"** for operation between -40°C to +125°C, with the exception of the parameters listed in this section.

Parameters in this section begin with an H, which denotes High temperature. For example, parameter DC10 in **Section 25.0 "Electrical Characteristics"** is the Industrial and Extended temperature equivalent of HDC10.

Absolute maximum ratings for the dsPIC33FJXXXGPX06A/X08A/X10A high temperature devices are listed below. Exposure to these maximum rating conditions for extended periods can affect device reliability. Functional operation of the device at these or any other conditions above the parameters indicated in the operation listings of this specification is not implied.

Absolute Maximum Ratings

(See Note 1)

Ambient temperature under bias(4) ..... -40°C to +150°C
Storage temperature ..... -65°C to +160°C
Voltage on V_{DD} with respect to V_{SS} ..... -0.3V to +4.0V
Voltage on any pin that is not 5V tolerant with respect to V_{SS}(5) ..... -0.3V to (V_{DD} + 0.3V)
Voltage on any 5V tolerant pin with respect to V_{SS} when V_{DD} < 3.0V(5) ..... -0.3V to (V_{DD} + 0.3V)
Voltage on any 5V tolerant pin with respect to V_{SS} when $V_{DD} \geq$ 3.0V(5) ..... -0.3V to 5.6V
Voltage on V_{CAP} with respect to V_{SS} ..... 2.25V to 2.75V
Maximum current out of V_{SS} pin ..... 60 mA
Maximum current into V_{DD} pin(2) ..... 60 mA
Maximum junction temperature ..... +155°C
Maximum current sourced/sunk by any 2x I/O pin(3) ..... 2 mA
Maximum current sourced/sunk by any 4x I/O pin(3) ..... 4 mA
Maximum current sourced/sunk by any 8x I/O pin(3) ..... 8 mA
Maximum current sunk by all ports combined ..... 10 mA
Maximum current sourced by all ports combined(2) ..... 10 mA

Note 1: Stresses above those listed under "Absolute Maximum Ratings" can cause permanent damage to the device. This is a stress rating only, and functional operation of the device at those or any other conditions above those indicated in the operation listings of this specification is not implied. Exposure to maximum rating conditions for extended periods can affect device reliability.

2: Maximum allowable current is a function of device maximum power dissipation (see Table 26-2).

3: Unlike devices at 125°C and below, the specifications in this section also apply to the CLKOUT, V_{REF+}, V_{REF-}, SCLx, SDAx, PGECx, and PGEDx pins.

4: AEC-Q100 reliability testing for devices intended to operate at 150°C is 1,000 hours. Any design in which the total operating time from 125°C to 150°C will be greater than 1,000 hours is not warranted without prior written approval from Microchip Technology Inc.

5: Refer to the **"Pin Diagrams"** section for 5V tolerant pins.

26.1 High Temperature DC Characteristics

TABLE 26-1: OPERATING MIPS VS. VOLTAGE

Characteristic	V_{DD} Range (in Volts)	Temperature Range (in °C)	Max MIPS
			dsPIC33FJXXXGPX06A/X08A/X10A
HDC5	V_{BOR} to 3.6V(1)	-40°C to +150°C	20

Note 1: Device is functional at $V_{BORMIN} < V_{DD} < V_{DDMIN}$. Analog modules such as the ADC will have degraded performance. Device functionality is tested but not characterized. Refer to parameter BO10 in Table 25-11 for the minimum and maximum BOR values.

TABLE 26-2: THERMAL OPERATING CONDITIONS

Rating	Symbol	Min	Typ	Max	Unit
High Temperature Devices					
Operating Junction Temperature Range	T_J	-40	—	+155	°C
Operating Ambient Temperature Range	T_A	-40	—	+150	°C
Power Dissipation: Internal chip power dissipation: $P_{INT} = V_{DD} \times (I_{DD} - \Sigma I_{OH})$ I/O Pin Power Dissipation: $I/O = \Sigma (\{V_{DD} - V_{OH}\} \times I_{OH}) + \Sigma (V_{OL} \times I_{OL})$	P_D	$P_{INT} + P_{I/O}$			W
Maximum Allowed Power Dissipation	P_{DMAX}	$(T_J - T_A)/\theta_{JA}$			W

TABLE 26-3: DC TEMPERATURE AND VOLTAGE SPECIFICATIONS

DC CHARACTERISTICS			Standard Operating Conditions: 3.0V to 3.6V (unless otherwise stated) Operating temperature -40°C ≤ T_A ≤ +150°C for High Temperature				
Parameter No.	**Symbol**	**Characteristic**	**Min**	**Typ**	**Max**	**Units**	**Conditions**
Operating Voltage							
HDC10	**Supply Voltage**						
	V_{DD}	—	3.0	3.3	3.6	V	-40°C to +150°C

TABLE 26-4: DC CHARACTERISTICS: POWER-DOWN CURRENT (I_{PD})

DC CHARACTERISTICS			Standard Operating Conditions: 3.0V to 3.6V (unless otherwise stated) Operating temperature -40°C ≤ T_A ≤ +150°C for High Temperature			
Parameter No.	**Typical**	**Max**	**Units**	**Conditions**		
Power-Down Current (I_{PD})						
HDC60e	250	2000	μA	+150°C	3.3V	Base Power-Down Current(1,3)

Note 1: Base I_{PD} is measured with all peripherals and clocks shut down. All I/Os are configured as inputs and pulled to V_{SS}. WDT, etc., are all switched off, and VREGS (RCON<8>) = 1.

2: The Δ current is the additional current consumed when the module is enabled. This current should be added to the base I_{PD} current.

3: These currents are measured on the device containing the most memory in this family.

4: These parameters are characterized, but are not tested in manufacturing.

© 2009-2012 Microchip Technology Inc.

DC CHARACTERISTICS			Standard Operating Conditions: 3.0V to 3.6V (unless otherwise stated) Operating temperature -40°C ≤ TA ≤ +150°C for High Temperature			
Parameter No.	**Typical**	**Max**	**Units**	**Conditions**		
Power-Down Current (IPD)						
HDC61c	3	5	μA	+150°C	3.3V	Watchdog Timer Current: ΔIWDT(2,4)

Note 1: Base IPD is measured with all peripherals and clocks shut down. All I/Os are configured as inputs and pulled to VSS. WDT, etc., are all switched off, and VREGS (RCON<8>) = 1.

2: The Δ current is the additional current consumed when the module is enabled. This current should be added to the base IPD current.

3: These currents are measured on the device containing the most memory in this family.

4: These parameters are characterized, but are not tested in manufacturing.

TABLE 26-5: DC CHARACTERISTICS: DOZE CURRENT (IDOZE)

DC CHARACTERISTICS			Standard Operating Conditions: 3.0V to 3.6V (unless otherwise stated) Operating temperature -40°C ≤ TA ≤ +150°C for High Temperature				
Parameter No.	**Typical(1)**	**Max**	**Doze Ratio**	**Units**	**Conditions**		
HDC72a	39	45	1:2	mA	+150°C	3.3V	20 MIPS
HDC72f	18	25	1:64	mA			
HDC72g	18	25	1:128	mA			

Note 1: Parameters with Doze ratios of 1:2 and 1:64 are characterized, but are not tested in manufacturing.

TABLE 26-6: DC CHARACTERISTICS: I/O PIN OUTPUT SPECIFICATIONS

DC CHARACTERISTICS			Standard Operating Conditions: 3.0V to 3.6V (unless otherwise stated) Operating temperature -40°C ≤ TA ≤ +85°C for High Temperature				
Param.	**Symbol**	**Characteristic**	**Min.**	**Typ.**	**Max.**	**Units**	**Conditions**
HDO10	VOL	**Output Low Voltage** I/O Pins: 2x Sink Driver Pins - All pins not defined by 4x or 8x driver pins	—	—	0.4	V	IOL ≤ 1.8 mA, VDD = 3.3V See **Note 1**
		Output Low Voltage I/O Pins: 4x Sink Driver Pins - RA2, RA3, RA9, RA10, RA14, RA15, RB0, RB1, RB11, RF4, RF5, RG2, RG3	—	—	0.4	V	IOL ≤ 3.6 mA, VDD = 3.3V See **Note 1**
		Output Low Voltage I/O Pins: 8x Sink Driver Pins - OSC2, CLKO, RC15	—	—	0.4	V	IOL ≤ 6 mA, VDD = 3.3V See **Note 1**
HDO20	VOH	**Output High Voltage** I/O Pins: 2x Source Driver Pins - All pins not defined by 4x or 8x driver pins	2.4	—	—	V	IOL ≥ -1.8 mA, VDD = 3.3V See **Note 1**
		Output High Voltage I/O Pins: 4x Source Driver Pins - RA2, RA3, RA9, RA10, RA14, RA15, RB0, RB1, RB11, RF4, RF5, RG2, RG3	2.4	—	—	V	IOL ≥ -3 mA, VDD = 3.3V See **Note 1**
		Output High Voltage I/O Pins: 8x Source Driver Pins - OSC2, CLKO, RC15	2.4	—	—	V	IOL ≥ -6 mA, VDD = 3.3V See **Note 1**
HDO20A	VOH1	**Output High Voltage** I/O Pins: 2x Source Driver Pins - All pins not defined by 4x or 8x driver pins	1.5	—	—	V	IOH ≥ -1.9 mA, VDD = 3.3V See **Note 1**
			2.0	—	—		IOH ≥ -1.85 mA, VDD = 3.3V See **Note 1**
			3.0	—	—		IOH ≥ -1.4 mA, VDD = 3.3V See **Note 1**
		Output High Voltage 4x Source Driver Pins - RA2, RA3, RA9, RA10, RA14, RA15, RB0, RB1, RB11, RF4, RF5, RG2, RG3	1.5	—	—	V	IOH ≥ -3.9 mA, VDD = 3.3V See **Note 1**
			2.0	—	—		IOH ≥ -3.7 mA, VDD = 3.3V See **Note 1**
			3.0	—	—		IOH ≥ -2 mA, VDD = 3.3V See **Note 1**
		Output High Voltage 8x Source Driver Pins - OSC2, CLKO, RC15	1.5	—	—	V	IOH ≥ -7.5 mA, VDD = 3.3V See **Note 1**
			2.0	—	—		IOH ≥ -6.8 mA, VDD = 3.3V See **Note 1**
			3.0	—	—		IOH ≥ -3 mA, VDD = 3.3V See **Note 1**

Note 1: Parameters are characterized, but not tested.

© 2009-2012 Microchip Technology Inc.

26.2 AC Characteristics and Timing Parameters

The information contained in this section defines dsPIC33FJXXXGPX06A/X08A/X10A AC characteristics and timing parameters for high temperature devices. However, all AC timing specifications in this section are the same as those in **Section 25.2 "AC Characteristics and Timing Parameters"**, with the exception of the parameters listed in this section.

Parameters in this section begin with an H, which denotes High temperature. For example, parameter OS53 in **Section 25.2 "AC Characteristics and Timing Parameters"** is the Industrial and Extended temperature equivalent of HOS53.

TABLE 26-7: TEMPERATURE AND VOLTAGE SPECIFICATIONS – AC

AC CHARACTERISTICS	**Standard Operating Conditions: 3.0V to 3.6V (unless otherwise stated)** Operating temperature -40°C ≤ TA ≤ +150°C for High Temperature Operating voltage VDD range as described in Table 26-1.

FIGURE 26-1: LOAD CONDITIONS FOR DEVICE TIMING SPECIFICATIONS

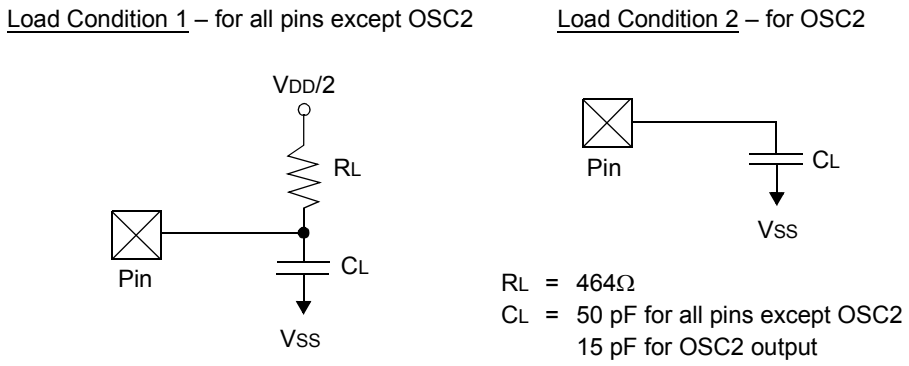

TABLE 26-8: PLL CLOCK TIMING SPECIFICATIONS

AC CHARACTERISTICS		Standard Operating Conditions: 3.0V to 3.6V (unless otherwise stated) Operating temperature -40°C ≤ TA ≤ +150°C for High Temperature					
Param No.	**Symbol**	**Characteristic**	**Min**	**Typ**	**Max**	**Units**	**Conditions**
HOS53	DCLK	CLKO Stability (Jitter)(1)	-5	0.5	5	%	Measured over 100 ms period

Note 1: These parameters are characterized, but are not tested in manufacturing.

TABLE 26-9: INTERNAL LPRC ACCURACY

AC CHARACTERISTICS	Standard Operating Conditions: 3.0V to 3.6V (unless otherwise stated) Operating temperature -40°C ≤ TA ≤ +150°C for High Temperature						
Param No.	**Characteristic**	**Min**	**Typ**	**Max**	**Units**	**Conditions**	
	LPRC @ 32.768 kHz (1)						
HF21	LPRC	-70(2)	—	+70(2)	%	-40°C ≤ TA ≤ +150°C	

Note 1: Change of LPRC frequency as VDD changes.

2: Characterized but not tested.

TABLE 26-10: SPIx MASTER MODE (CKE = 0) TIMING REQUIREMENTS

AC CHARACTERISTICS		Standard Operating Conditions: 3.0V to 3.6V (unless otherwise stated) Operating temperature -40°C ≤ TA ≤ +150°C for High Temperature					
Param No.	**Symbol**	**Characteristic(1)**	**Min**	**Typ**	**Max**	**Units**	**Conditions**
HSP35	TscH2doV, TscL2doV	SDOx Data Output Valid after SCKx Edge	—	10	25	ns	—
HSP40	TdiV2scH, TdiV2scL	Setup Time of SDIx Data Input to SCKx Edge	28	—	—	ns	—
HSP41	TscH2diL, TscL2diL	Hold Time of SDIx Data Input to SCKx Edge	35	—	—	ns	—

Note 1: These parameters are characterized but not tested in manufacturing.

TABLE 26-11: SPIx MODULE MASTER MODE (CKE = 1) TIMING REQUIREMENTS

AC CHARACTERISTICS		Standard Operating Conditions: 3.0V to 3.6V (unless otherwise stated) Operating temperature -40°C ≤ TA ≤ +150°C for High Temperature					
Param No.	**Symbol**	**Characteristic(1)**	**Min**	**Typ**	**Max**	**Units**	**Conditions**
HSP35	TscH2doV, TscL2doV	SDOx Data Output Valid after SCKx Edge	—	10	25	ns	—
HSP36	TdoV2sc, TdoV2scL	SDOx Data Output Setup to First SCKx Edge	35	—	—	ns	—
HSP40	TdiV2scH, TdiV2scL	Setup Time of SDIx Data Input to SCKx Edge	28	—	—	ns	—
HSP41	TscH2diL, TscL2diL	Hold Time of SDIx Data Input to SCKx Edge	35	—	—	ns	—

Note 1: These parameters are characterized but not tested in manufacturing.

© 2009-2012 Microchip Technology Inc.

TABLE 26-12: SPIx MODULE SLAVE MODE (CKE = 0) TIMING REQUIREMENTS

AC CHARACTERISTICS		Standard Operating Conditions: 3.0V to 3.6V (unless otherwise stated) Operating temperature -40°C ≤ TA ≤ +150°C for High Temperature					
Param No.	**Symbol**	**Characteristic(1)**	**Min**	**Typ**	**Max**	**Units**	**Conditions**
HSP35	TscH2doV, TscL2doV	SDOx Data Output Valid after SCKx Edge	—	—	35	ns	—
HSP40	TdiV2scH, TdiV2scL	Setup Time of SDIx Data Input to SCKx Edge	25	—	—	ns	—
HSP41	TscH2diL, TscL2diL	Hold Time of SDIx Data Input to SCKx Edge	25	—	—	ns	—
HSP51	TssH2doZ	$\overline{SSx}$ ↑ to SDOx Output High-Impedance	15	—	55	ns	See **Note 2**

Note 1: These parameters are characterized but not tested in manufacturing.

2: Assumes 50 pF load on all SPIx pins.

TABLE 26-13: SPIx MODULE SLAVE MODE (CKE = 1) TIMING REQUIREMENTS

AC CHARACTERISTICS		Standard Operating Conditions: 3.0V to 3.6V (unless otherwise stated) Operating temperature -40°C ≤ TA ≤ +150°C for High Temperature					
Param No.	**Symbol**	**Characteristic(1)**	**Min**	**Typ**	**Max**	**Units**	**Conditions**
HSP35	TscH2doV, TscL2doV	SDOx Data Output Valid after SCKx Edge	—	—	35	ns	—
HSP40	TdiV2scH, TdiV2scL	Setup Time of SDIx Data Input to SCKx Edge	25	—	—	ns	—
HSP41	TscH2diL, TscL2diL	Hold Time of SDIx Data Input to SCKx Edge	25	—	—	ns	—
HSP51	TssH2doZ	$\overline{SSx}$ ↑ to SDOx Output High-Impedance	15	—	55	ns	See **Note 2**
HSP60	TssL2doV	SDOx Data Output Valid after $\overline{SSx}$ Edge	—	—	55	ns	—

Note 1: These parameters are characterized but not tested in manufacturing.

2: Assumes 50 pF load on all SPIx pins.

TABLE 26-14: ADC MODULE SPECIFICATIONS

AC CHARACTERISTICS		Standard Operating Conditions: 3.0V to 3.6V (unless otherwise stated) Operating temperature -40°C ≤ TA ≤ +150°C for High Temperature					
Param No.	**Symbol**	**Characteristic**	**Min**	**Typ**	**Max**	**Units**	**Conditions**
Reference Inputs							
HAD08	IREF	Current Drain	— —	250 —	600 50	μA μA	ADC operating, See **Note 1** ADC off, See **Note 1**

Note 1: These parameters are not characterized or tested in manufacturing.
2: These parameters are characterized, but are not tested in manufacturing.

TABLE 26-15: ADC MODULE SPECIFICATIONS (12-BIT MODE)(3)

AC CHARACTERISTICS		Standard Operating Conditions: 3.0V to 3.6V (unless otherwise stated) Operating temperature -40°C ≤ TA ≤ +150°C for High Temperature					
Param No.	**Symbol**	**Characteristic**	**Min**	**Typ**	**Max**	**Units**	**Conditions**
ADC Accuracy (12-bit Mode) – Measurements with external VREF+/VREF-(1)							
AD23a	GERR	Gain Error	—	5	10	LSb	VINL = AVSS = VREFL = 0V, AVDD = VREFH = 3.6V
AD24a	EOFF	Offset Error	—	2	5	LSb	VINL = AVSS = VREFL = 0V, AVDD = VREFH = 3.6V
ADC Accuracy (12-bit Mode) – Measurements with internal VREF+/VREF-(1)							
AD23a	GERR	Gain Error	2	10	20	LSb	VINL = AVSS = 0V, AVDD = 3.6V
AD24a	EOFF	Offset Error	2	5	10	LSb	VINL = AVSS = 0V, AVDD = 3.6V
Dynamic Performance (12-bit Mode)(2)							
HAD33a	FNYQ	Input Signal Bandwidth	—	—	200	kHz	—

Note 1: These parameters are characterized, but are tested at 20 ksps only.
2: These parameters are characterized by similarity, but are not tested in manufacturing.
3: Injection currents > | 0 | can affect the ADC results by approximately 4-6 counts.

TABLE 26-16: ADC MODULE SPECIFICATIONS (10-BIT MODE)(3)

AC CHARACTERISTICS		Standard Operating Conditions: 3.0V to 3.6V (unless otherwise stated) Operating temperature -40°C ≤ TA ≤ +150°C for High Temperature					
Param No.	**Symbol**	**Characteristic**	**Min**	**Typ**	**Max**	**Units**	**Conditions**
ADC Accuracy (12-bit Mode) – Measurements with external VREF+/VREF-(1)							
AD23b	GERR	Gain Error	—	3	6	LSb	VINL = AVSS = VREFL = 0V, AVDD = VREFH = 3.6V
AD24b	EOFF	Offset Error	—	2	5	LSb	VINL = AVSS = VREFL = 0V, AVDD = VREFH = 3.6V
ADC Accuracy (12-bit Mode) – Measurements with internal VREF+/VREF-(1)							
AD23b	GERR	Gain Error	—	7	15	LSb	VINL = AVSS = 0V, AVDD = 3.6V
AD24b	EOFF	Offset Error	—	3	7	LSb	VINL = AVSS = 0V, AVDD = 3.6V
Dynamic Performance (10-bit Mode)(2)							
HAD33b	FNYQ	Input Signal Bandwidth	—	—	400	kHz	—

Note 1: These parameters are characterized, but are tested at 20 ksps only.
2: These parameters are characterized by similarity, but are not tested in manufacturing.
3: Injection currents > | 0 | can affect the ADC results by approximately 4-6 counts.

© 2009-2012 Microchip Technology Inc.

TABLE 26-17: ADC CONVERSION (12-BIT MODE) TIMING REQUIREMENTS

AC CHARACTERISTICS		Standard Operating Conditions: 3.0V to 3.6V (unless otherwise stated) Operating temperature -40°C ≤ TA ≤ +150°C for High Temperature					
Param No.	**Symbol**	**Characteristic**	**Min**	**Typ**	**Max**	**Units**	**Conditions**
Clock Parameters							
HAD50	TAD	ADC Clock Period(1)	147	—	—	ns	—
Conversion Rate							
HAD56	FCNV	Throughput Rate(1)	—	—	400	Ksps	—

Note 1: These parameters are characterized but not tested in manufacturing.

TABLE 26-18: ADC CONVERSION (10-BIT MODE) TIMING REQUIREMENTS

AC CHARACTERISTICS		Standard Operating Conditions: 3.0V to 3.6V (unless otherwise stated) Operating temperature -40°C ≤ TA ≤ +150°C for High Temperature					
Param No.	**Symbol**	**Characteristic**	**Min**	**Typ**	**Max**	**Units**	**Conditions**
Clock Parameters							
HAD50	TAD	ADC Clock Period(1)	104	—	—	ns	—
Conversion Rate							
HAD56	FCNV	Throughput Rate(1)	—	—	800	Ksps	—

Note 1: These parameters are characterized but not tested in manufacturing.

NOTES:

© 2009-2012 Microchip Technology Inc.

27.0 DC AND AC DEVICE CHARACTERISTICS GRAPHS

Note: The graphs provided following this note are a statistical summary based on a limited number of samples and are provided for design guidance purposes only. The performance characteristics listed herein are not tested or guaranteed. In some graphs, the data presented may be outside the specified operating range (e.g., outside specified power supply range) and therefore, outside the warranted range.

FIGURE 27-1: VOH – 2x DRIVER PINS

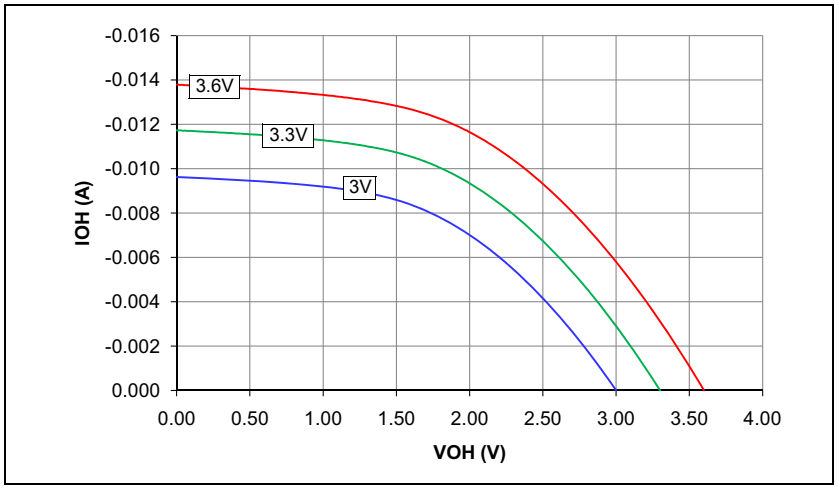

FIGURE 27-2: VOH – 4x DRIVER PINS

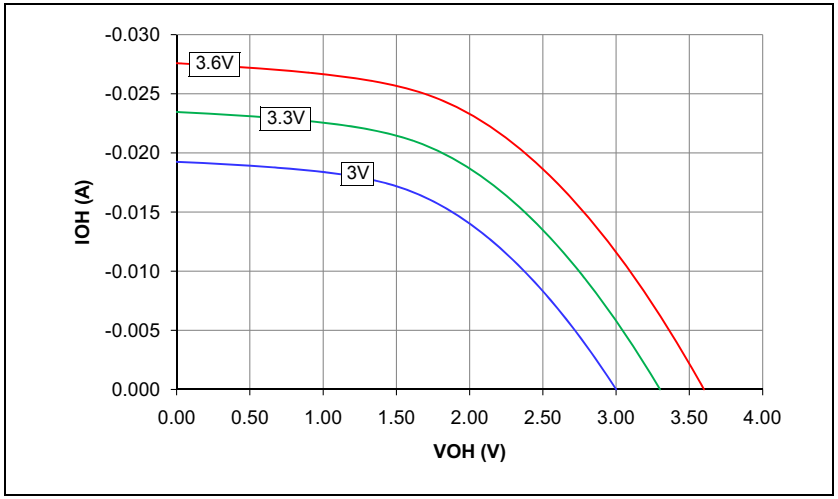

FIGURE 27-3: VOH – 8x DRIVER PINS

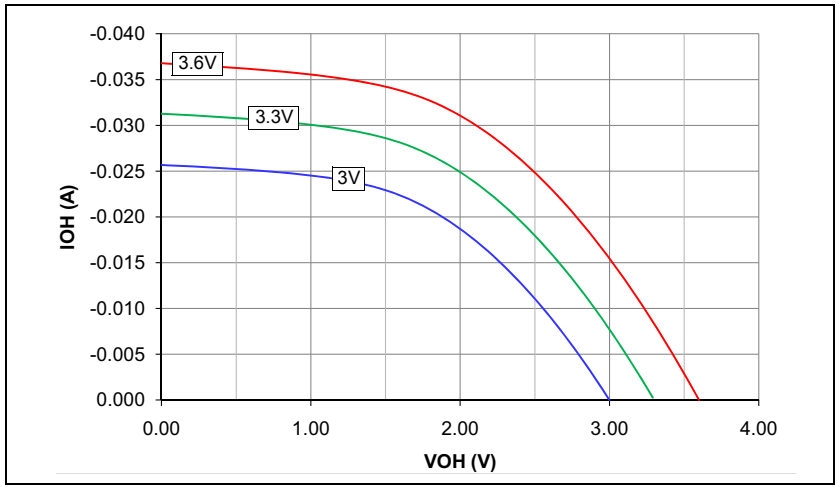

FIGURE 27-4: VOH – 16x DRIVER PINS

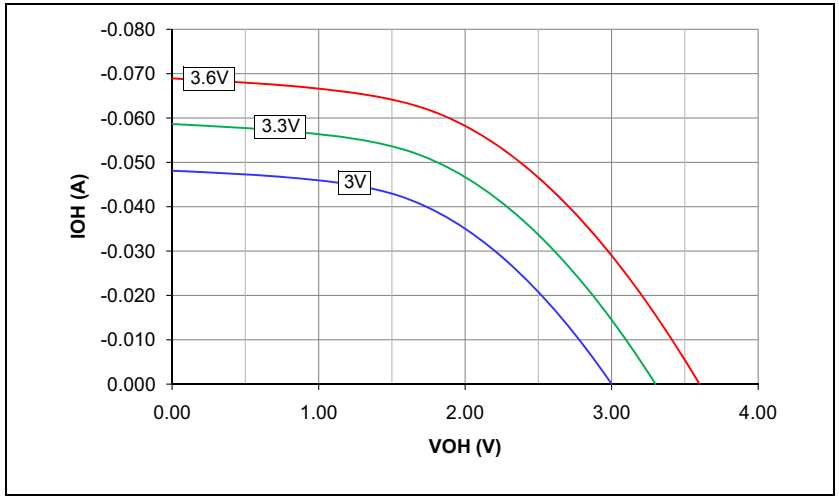

© 2009-2012 Microchip Technology Inc.

FIGURE 27-5: VOL – 2x DRIVER PINS

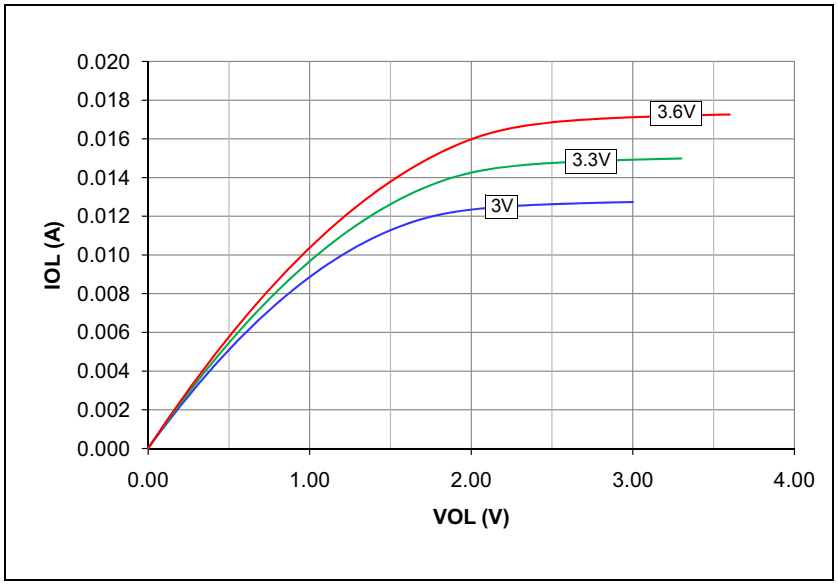

FIGURE 27-6: VOL – 4x DRIVER PINS

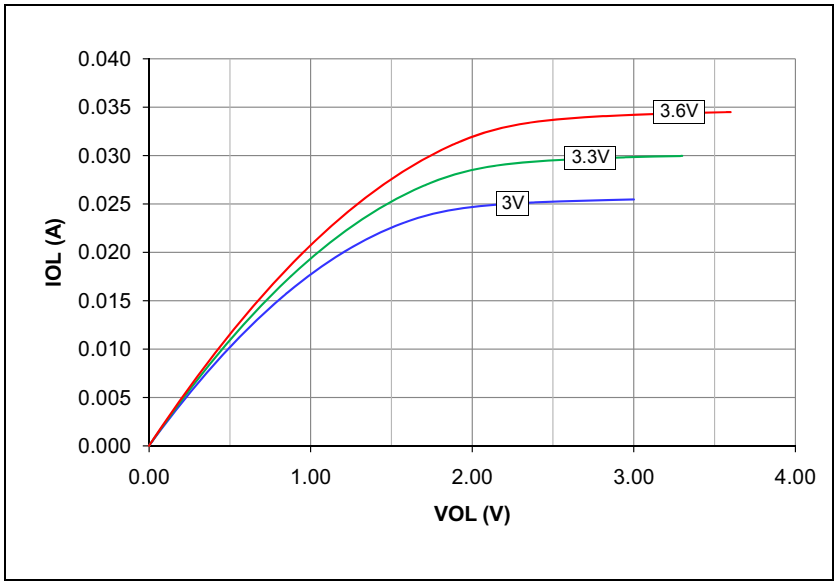

FIGURE 27-7: VOL – 8x DRIVER PINS

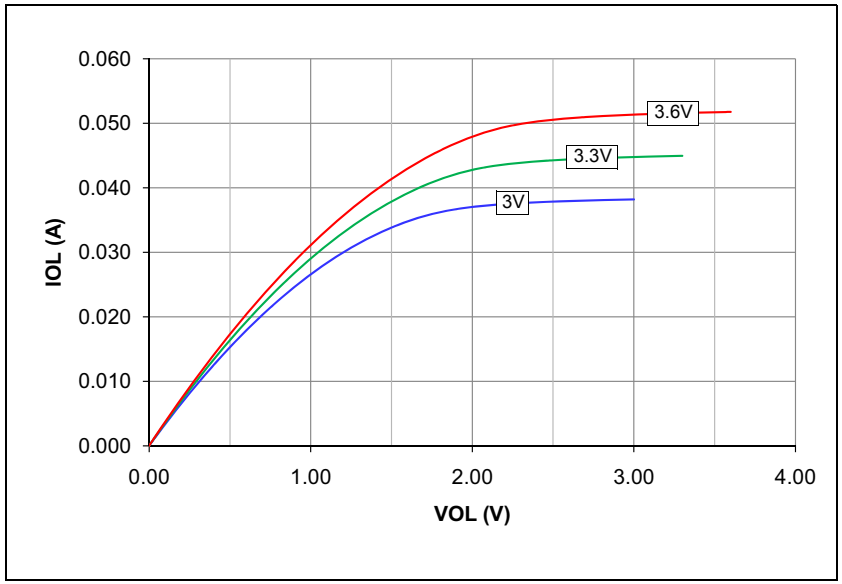

FIGURE 27-8: VOL – 16x DRIVER PINS

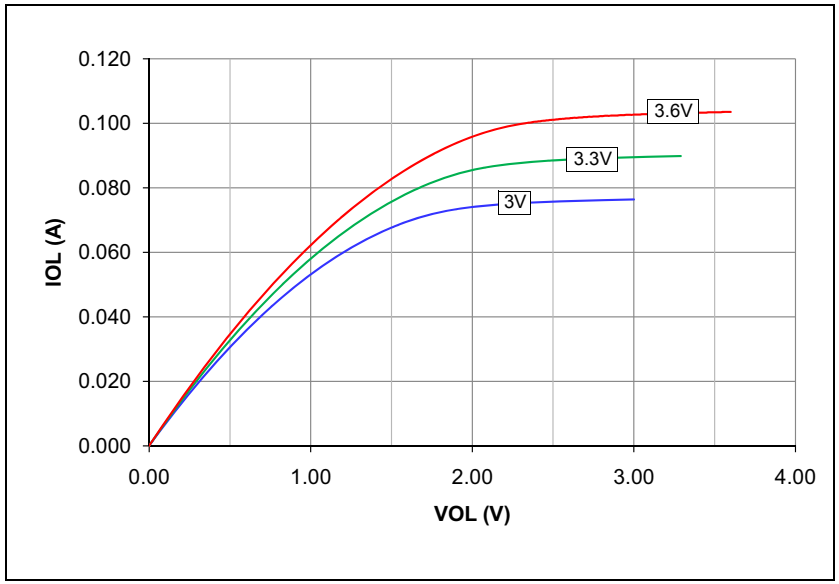

© 2009-2012 Microchip Technology Inc.

FIGURE 27-9: TYPICAL FRC FREQUENCY @ VDD = 3.3V

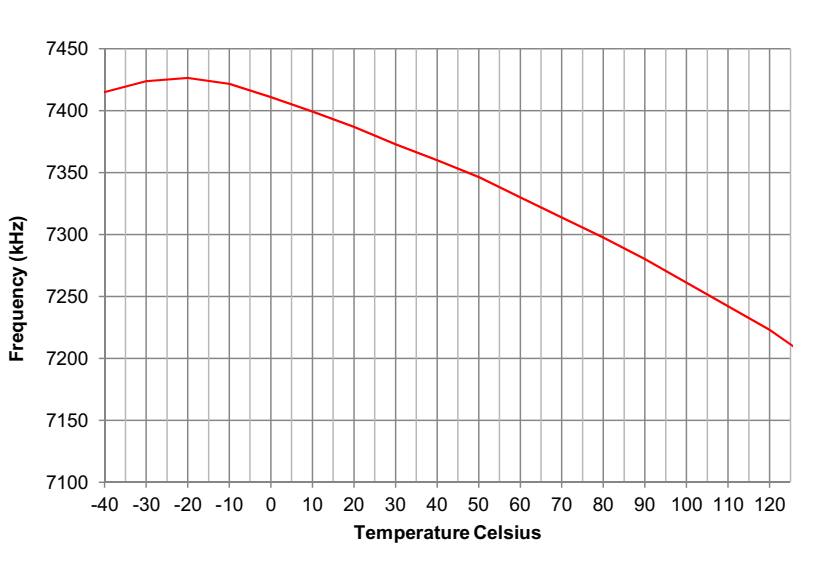

FIGURE 27-10: TYPICAL LPRC FREQUENCY @ VDD = 3.3V

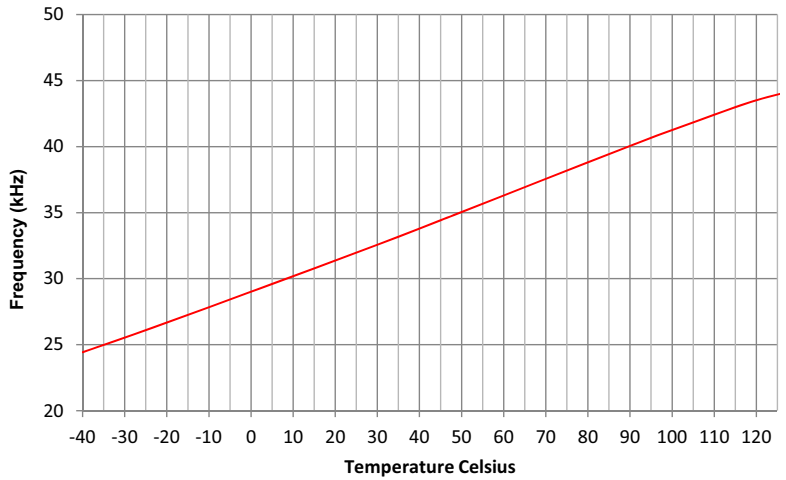

© 2009-2012 Microchip Technology Inc.

NOTES:

© 2009-2012 Microchip Technology Inc.

28.0 PACKAGING INFORMATION

28.1 Package Marking Information

64-Lead QFN (9x9x0.9mm)

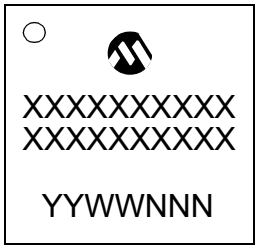

Example

64-Lead TQFP (10x10x1 mm)

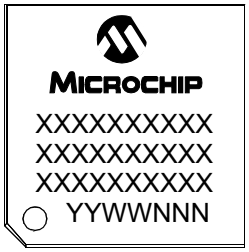

Example

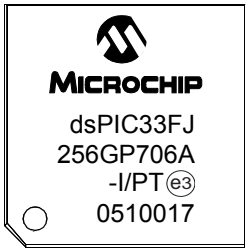

80-Lead TQFP (12x12x1 mm)

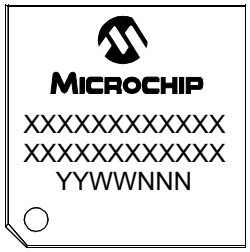

Example

Legend:	XX...X	Customer-specific information
	Y	Year code (last digit of calendar year)
	YY	Year code (last 2 digits of calendar year)
	WW	Week code (week of January 1 is week ‘01’)
	NNN	Alphanumeric traceability code
	e3	Pb-free JEDEC designator for Matte Tin (Sn)
	*	This package is Pb-free. The Pb-free JEDEC designator (e3) can be found on the outer packaging for this package.

Note: In the event the full Microchip part number cannot be marked on one line, it will be carried over to the next line, thus limiting the number of available characters for customer-specific information.

28.1 Package Marking Information (Continued)

100-Lead TQFP (12x12x1 mm)

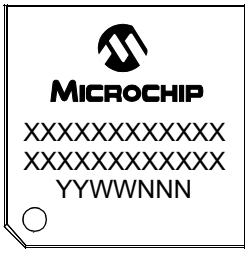

Example

100-Lead TQFP (14x14x1mm)

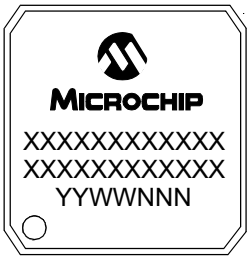

Example

Legend:	XX...X	Customer-specific information
	Y	Year code (last digit of calendar year)
	YY	Year code (last 2 digits of calendar year)
	WW	Week code (week of January 1 is week ‘01’)
	NNN	Alphanumeric traceability code
	e3	Pb-free JEDEC designator for Matte Tin (Sn)
	*	This package is Pb-free. The Pb-free JEDEC designator (e3) can be found on the outer packaging for this package.

Note: In the event the full Microchip part number cannot be marked on one line, it will be carried over to the next line, thus limiting the number of available characters for customer-specific information.

© 2009-2012 Microchip Technology Inc.

28.2 Package Details

64-Lead Plastic Quad Flat, No Lead Package (MR) – 9x9x0.9 mm Body with 5.40 x 5.40 Exposed Pad [QFN]

Note: For the most current package drawings, please see the Microchip Packaging Specification located at http://www.microchip.com/packaging

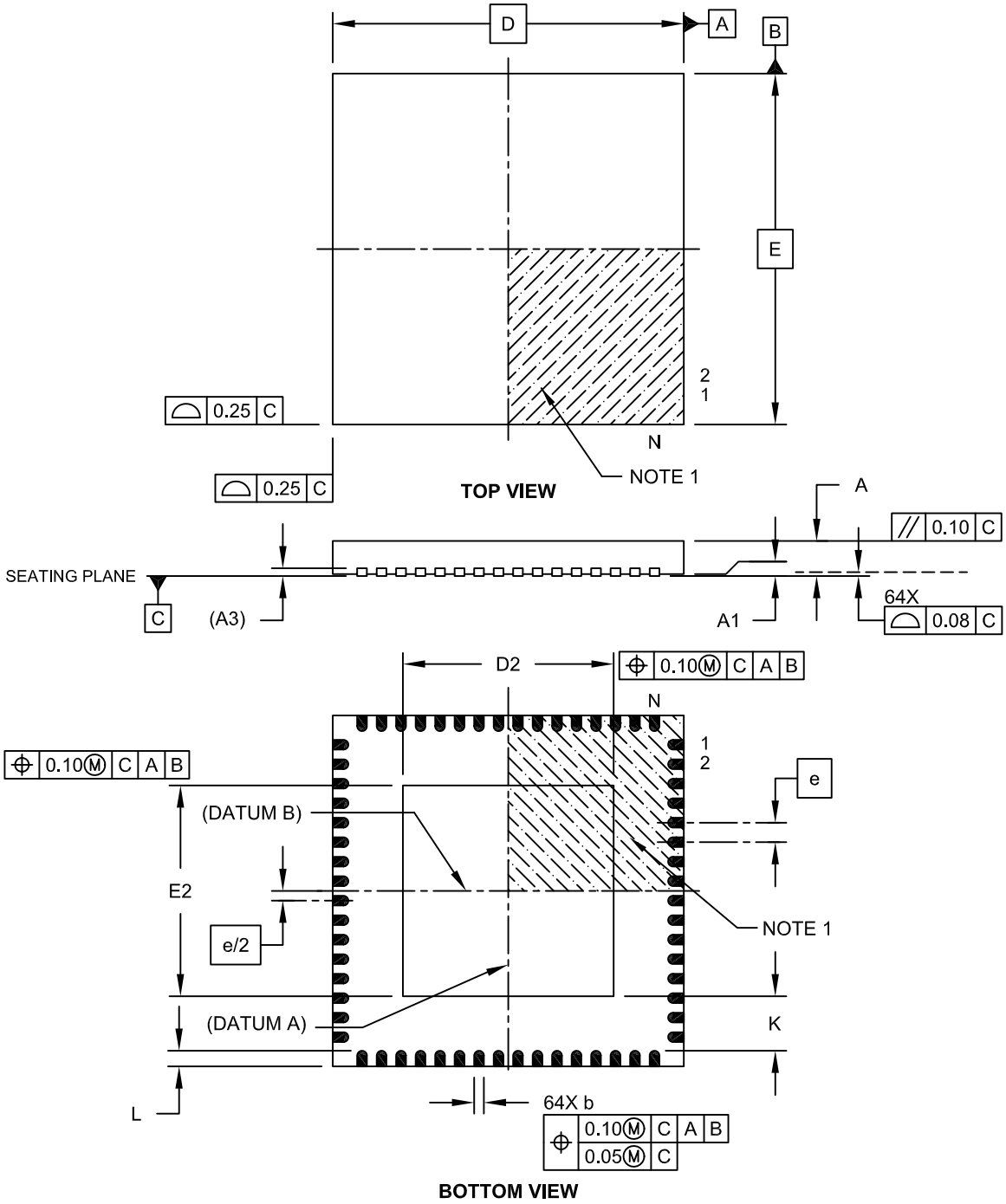

Microchip Technology Drawing C04-154A Sheet 1 of 2

64-Lead Plastic Quad Flat, No Lead Package (MR) – 9x9x0.9 mm Body with 5.40 x 5.40 Exposed Pad [QFN]

Note: For the most current package drawings, please see the Microchip Packaging Specification located at http://www.microchip.com/packaging

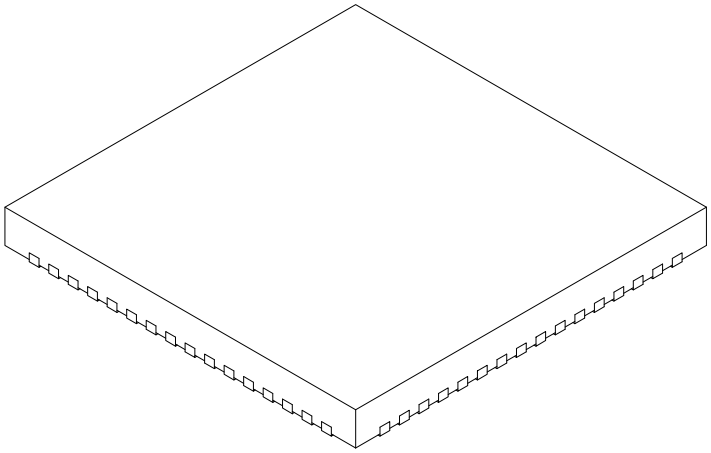

Units		MILLIMETERS		
Dimension Limits		MIN	NOM	MAX
Number of Pins	N	64		
Pitch	e	0.50 BSC		
Overall Height	A	0.80	0.90	1.00
Standoff	A1	0.00	0.02	0.05
Contact Thickness	A3	0.20 REF		
Overall Width	E	9.00 BSC		
Exposed Pad Width	E2	5.30	5.40	5.50
Overall Length	D	9.00 BSC		
Exposed Pad Length	D2	5.30	5.40	5.50
Contact Width	b	0.20	0.25	0.30
Contact Length	L	0.30	0.40	0.50
Contact-to-Exposed Pad	K	0.20	-	-

Notes:

1. Pin 1 visual index feature may vary, but must be located within the hatched area.
2. Package is saw singulated.
3. Dimensioning and tolerancing per ASME Y14.5M.
   BSC: Basic Dimension. Theoretically exact value shown without tolerances.
   REF: Reference Dimension, usually without tolerance, for information purposes only.

Microchip Technology Drawing C04-154A Sheet 2 of 2

© 2009-2012 Microchip Technology Inc.

64-Lead Plastic Thin Quad Flatpack (PT) – 10x10x1 mm Body, 2.00 mm Footprint [TQFP]

Note: For the most current package drawings, please see the Microchip Packaging Specification located at http://www.microchip.com/packaging

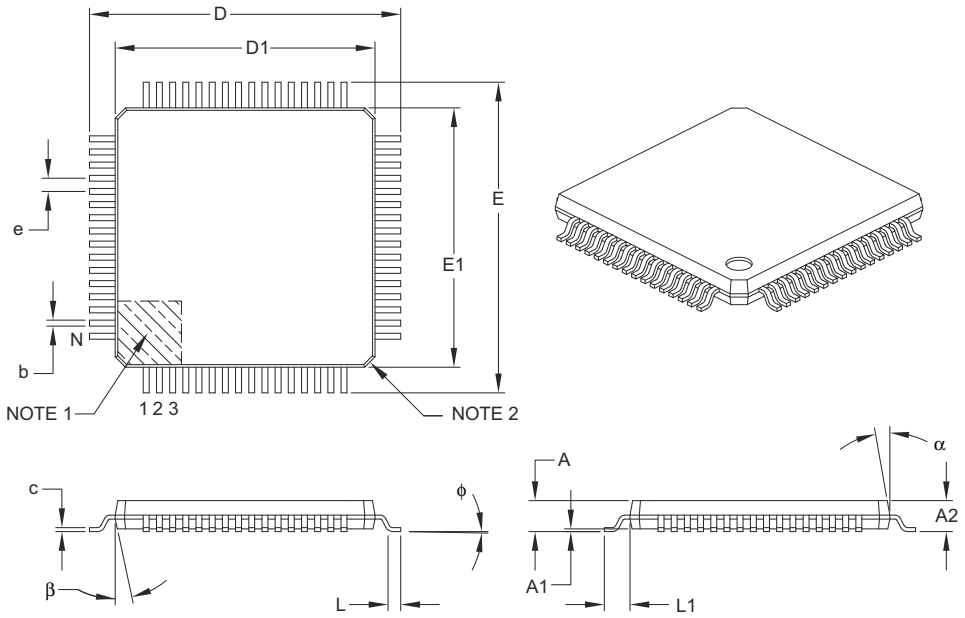

Units		MILLIMETERS		
Dimension Limits		MIN	NOM	MAX
Number of Leads	N	64		
Lead Pitch	e	0.50 BSC		
Overall Height	A	–	–	1.20
Molded Package Thickness	A2	0.95	1.00	1.05
Standoff	A1	0.05	–	0.15
Foot Length	L	0.45	0.60	0.75
Footprint	L1	1.00 REF		
Foot Angle	ϕ	0°	3.5°	7°
Overall Width	E	12.00 BSC		
Overall Length	D	12.00 BSC		
Molded Package Width	E1	10.00 BSC		
Molded Package Length	D1	10.00 BSC		
Lead Thickness	c	0.09	–	0.20
Lead Width	b	0.17	0.22	0.27
Mold Draft Angle Top	α	11°	12°	13°
Mold Draft Angle Bottom	β	11°	12°	13°

Notes:

1. Pin 1 visual index feature may vary, but must be located within the hatched area.
2. Chamfers at corners are optional; size may vary.
3. Dimensions D1 and E1 do not include mold flash or protrusions. Mold flash or protrusions shall not exceed 0.25 mm per side.
4. Dimensioning and tolerancing per ASME Y14.5M.

   BSC: Basic Dimension. Theoretically exact value shown without tolerances.

   REF: Reference Dimension, usually without tolerance, for information purposes only.

Microchip Technology Drawing C04-085B

64-Lead Plastic Thin Quad Flatpack (PT) 10x10x1 mm Body, 2.00 mm Footprint [TQFP]

Note: For the most current package drawings, please see the Microchip Packaging Specification located at http://www.microchip.com/packaging

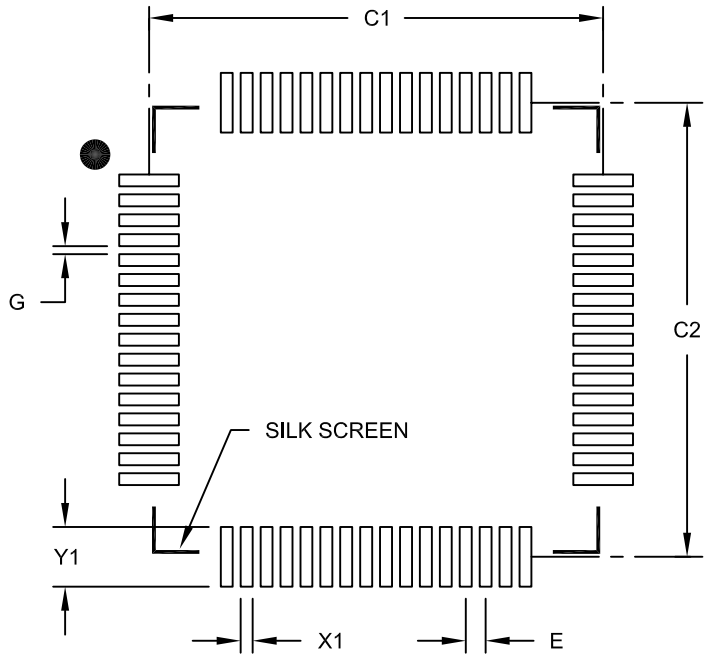

RECOMMENDED LAND PATTERN

Units		MILLIMETERS		
Dimension Limits		MIN	NOM	MAX
Contact Pitch	E		0.50 BSC	
Contact Pad Spacing	C1		11.40	
Contact Pad Spacing	C2		11.40	
Contact Pad Width (X64)	X1			0.30
Contact Pad Length (X64)	Y1			1.50
Distance Between Pads	G	0.20		

Notes:

1. Dimensioning and tolerancing per ASME Y14.5M
   BSC: Basic Dimension. Theoretically exact value shown without tolerances.

Microchip Technology Drawing No. C04-2085B

© 2009-2012 Microchip Technology Inc.

80-Lead Plastic Thin Quad Flatpack (PT) – 12x12x1 mm Body, 2.00 mm Footprint [TQFP]

Note: For the most current package drawings, please see the Microchip Packaging Specification located at http://www.microchip.com/packaging

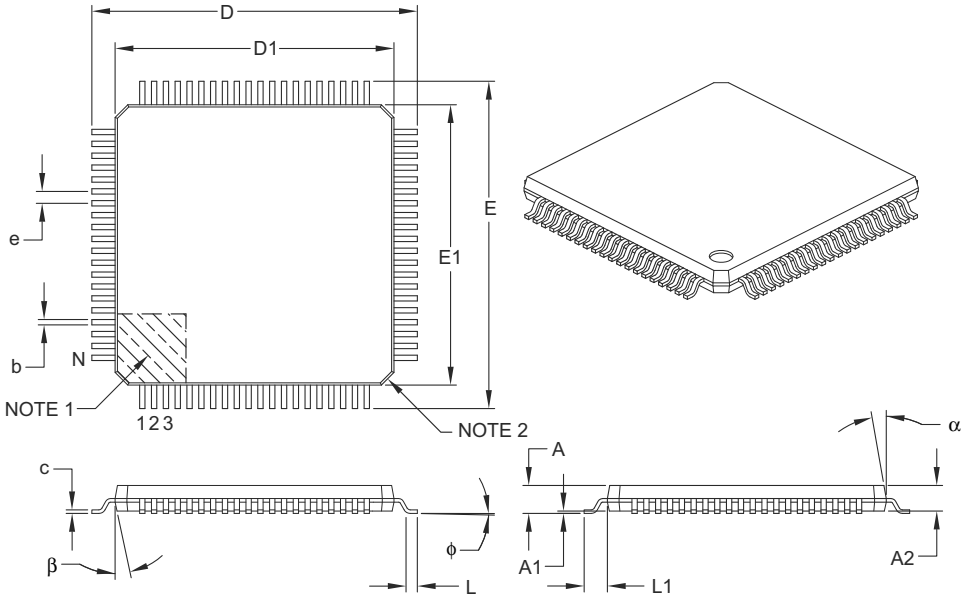

Units		MILLIMETERS		
Dimension Limits		MIN	NOM	MAX
Number of Leads	N	80		
Lead Pitch	e	0.50 BSC		
Overall Height	A	–	–	1.20
Molded Package Thickness	A2	0.95	1.00	1.05
Standoff	A1	0.05	–	0.15
Foot Length	L	0.45	0.60	0.75
Footprint	L1	1.00 REF		
Foot Angle	ϕ	0°	3.5°	7°
Overall Width	E	14.00 BSC		
Overall Length	D	14.00 BSC		
Molded Package Width	E1	12.00 BSC		
Molded Package Length	D1	12.00 BSC		
Lead Thickness	c	0.09	–	0.20
Lead Width	b	0.17	0.22	0.27
Mold Draft Angle Top	α	11°	12°	13°
Mold Draft Angle Bottom	β	11°	12°	13°

Notes:

1. Pin 1 visual index feature may vary, but must be located within the hatched area.
2. Chamfers at corners are optional; size may vary.
3. Dimensions D1 and E1 do not include mold flash or protrusions. Mold flash or protrusions shall not exceed 0.25 mm per side.
4. Dimensioning and tolerancing per ASME Y14.5M.

   BSC: Basic Dimension. Theoretically exact value shown without tolerances.

   REF: Reference Dimension, usually without tolerance, for information purposes only.

Microchip Technology Drawing C04-092B

80-Lead Plastic Thin Quad Flatpack (PT) - 12x12x1mm Body, 2.00 mm Footprint [TQFP]

Note: For the most current package drawings, please see the Microchip Packaging Specification located at http://www.microchip.com/packaging

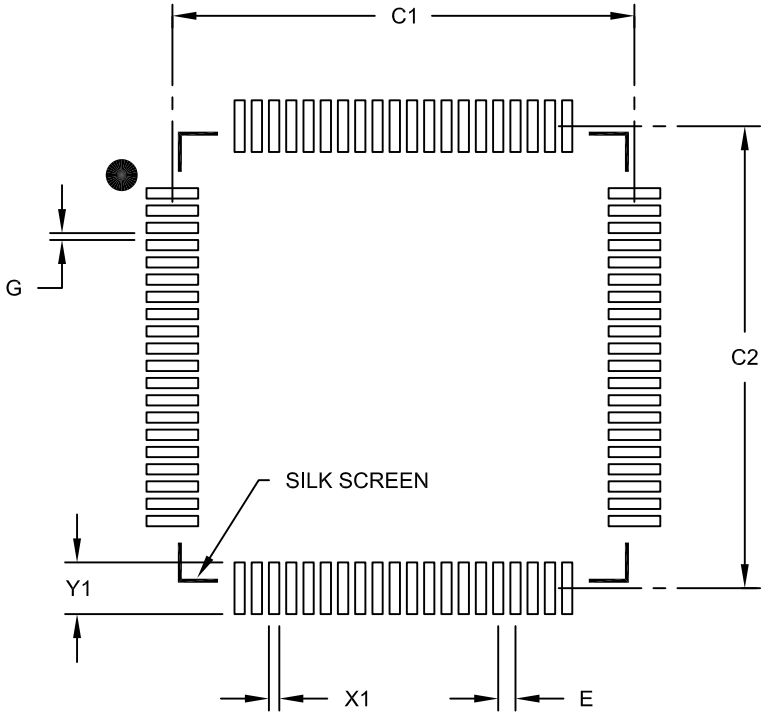

RECOMMENDED LAND PATTERN

Units		MILLIMETERS		
Dimension Limits		MIN	NOM	MAX
Contact Pitch	E	0.50 BSC		
Contact Pad Spacing	C1		13.40	
Contact Pad Spacing	C2		13.40	
Contact Pad Width (X80)	X1			0.30
Contact Pad Length (X80)	Y1			1.50
Distance Between Pads	G	0.20		

Notes:

1. Dimensioning and tolerancing per ASME Y14.5M
   BSC: Basic Dimension. Theoretically exact value shown without tolerances.

Microchip Technology Drawing No. C04-2092B

© 2009-2012 Microchip Technology Inc.

100-Lead Plastic Thin Quad Flatpack (PT) – 12x12x1 mm Body, 2.00 mm Footprint [TQFP]

Note: For the most current package drawings, please see the Microchip Packaging Specification located at http://www.microchip.com/packaging

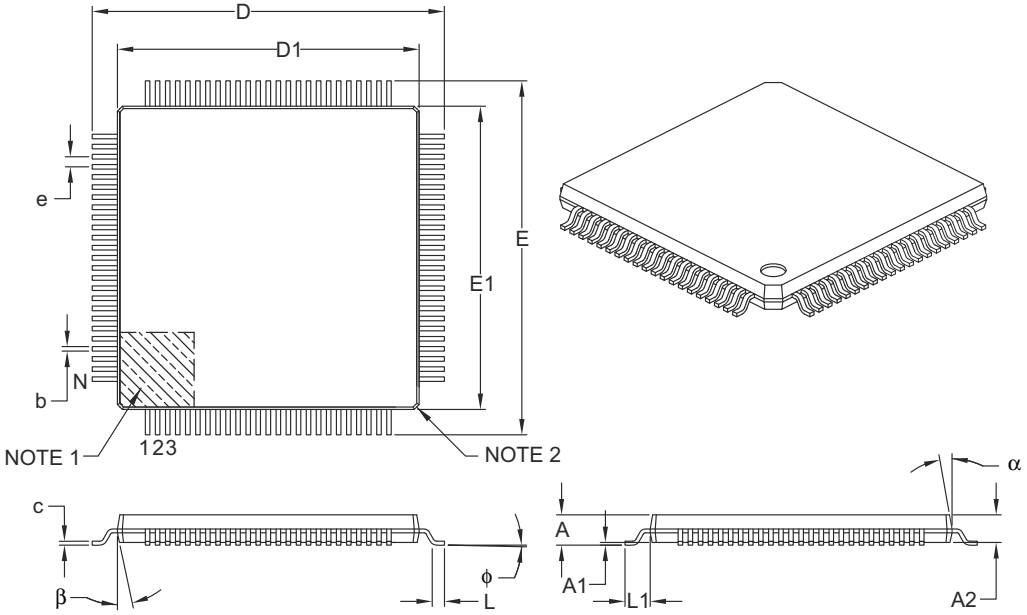

Units		MILLIMETERS		
Dimension Limits		MIN	NOM	MAX
Number of Leads	N	100		
Lead Pitch	e	0.40 BSC		
Overall Height	A	–	–	1.20
Molded Package Thickness	A2	0.95	1.00	1.05
Standoff	A1	0.05	–	0.15
Foot Length	L	0.45	0.60	0.75
Footprint	L1	1.00 REF		
Foot Angle	φ	0°	3.5°	7°
Overall Width	E	14.00 BSC		
Overall Length	D	14.00 BSC		
Molded Package Width	E1	12.00 BSC		
Molded Package Length	D1	12.00 BSC		
Lead Thickness	c	0.09	–	0.20
Lead Width	b	0.13	0.18	0.23
Mold Draft Angle Top	α	11°	12°	13°
Mold Draft Angle Bottom	β	11°	12°	13°

Notes:

1. Pin 1 visual index feature may vary, but must be located within the hatched area.
2. Chamfers at corners are optional; size may vary.
3. Dimensions D1 and E1 do not include mold flash or protrusions. Mold flash or protrusions shall not exceed 0.25 mm per side.
4. Dimensioning and tolerancing per ASME Y14.5M.

   BSC: Basic Dimension. Theoretically exact value shown without tolerances.
   REF: Reference Dimension, usually without tolerance, for information purposes only.

Microchip Technology Drawing C04-100B

100-Lead Plastic Thin Quad Flatpack (PT)-12x12x1mm Body, 2.00 mm Footprint [TQFP]

Note: For the most current package drawings, please see the Microchip Packaging Specification located at http://www.microchip.com/packaging

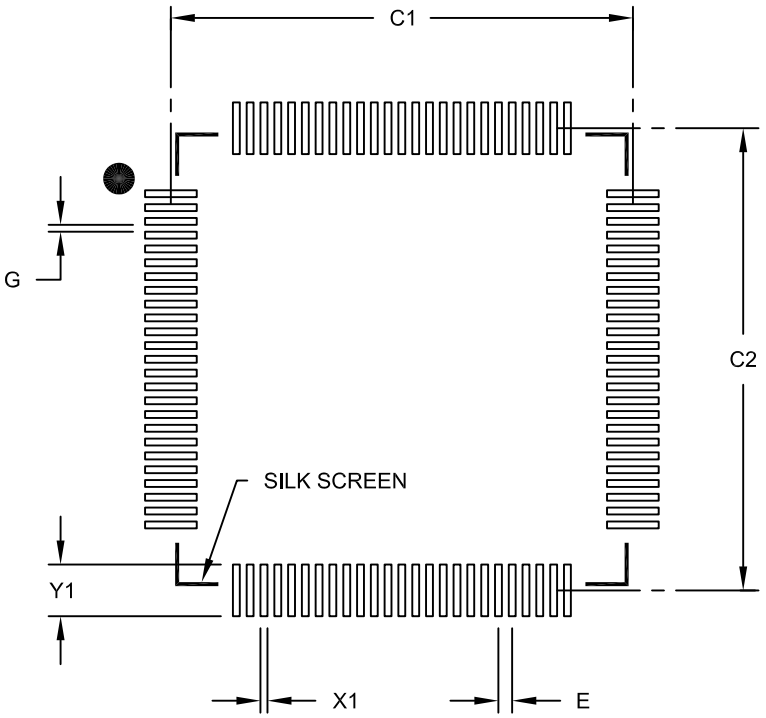

RECOMMENDED LAND PATTERN

Units		MILLIMETERS		
Dimension Limits		MIN	NOM	MAX
Contact Pitch	E		0.40 BSC	
Contact Pad Spacing	C1		13.40	
Contact Pad Spacing	C2		13.40	
Contact Pad Width (X100)	X1			0.20
Contact Pad Length (X100)	Y1			1.50
Distance Between Pads	G	0.20		

Notes:

1. Dimensioning and tolerancing per ASME Y14.5M
   BSC: Basic Dimension. Theoretically exact value shown without tolerances.

Microchip Technology Drawing No. C04-2100B

© 2009-2012 Microchip Technology Inc.

100-Lead Plastic Thin Quad Flatpack (PF) – 14x14x1 mm Body, 2.00 mm Footprint [TQFP]

Note: For the most current package drawings, please see the Microchip Packaging Specification located at http://www.microchip.com/packaging

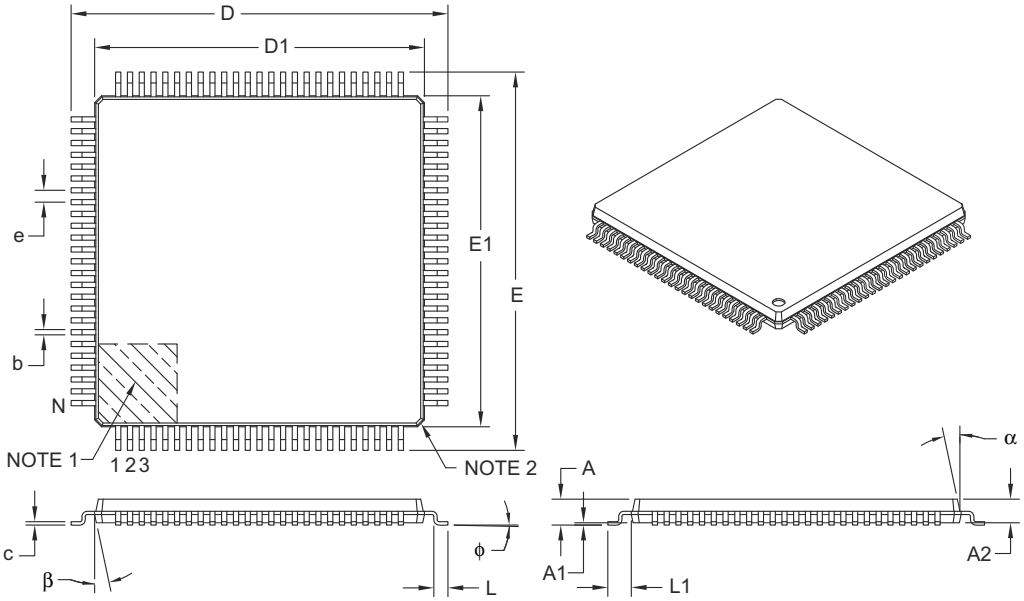

Units		MILLIMETERS		
Dimension Limits		MIN	NOM	MAX
Number of Leads	N	100		
Lead Pitch	e	0.50 BSC		
Overall Height	A	–	–	1.20
Molded Package Thickness	A2	0.95	1.00	1.05
Standoff	A1	0.05	–	0.15
Foot Length	L	0.45	0.60	0.75
Footprint	L1	1.00 REF		
Foot Angle	ϕ	0°	3.5°	7°
Overall Width	E	16.00 BSC		
Overall Length	D	16.00 BSC		
Molded Package Width	E1	14.00 BSC		
Molded Package Length	D1	14.00 BSC		
Lead Thickness	c	0.09	–	0.20
Lead Width	b	0.17	0.22	0.27
Mold Draft Angle Top	α	11°	12°	13°
Mold Draft Angle Bottom	β	11°	12°	13°

Notes:

1. Pin 1 visual index feature may vary, but must be located within the hatched area.
2. Chamfers at corners are optional; size may vary.
3. Dimensions D1 and E1 do not include mold flash or protrusions. Mold flash or protrusions shall not exceed 0.25 mm per side.
4. Dimensioning and tolerancing per ASME Y14.5M.

   BSC: Basic Dimension. Theoretically exact value shown without tolerances.
   REF: Reference Dimension, usually without tolerance, for information purposes only.

Microchip Technology Drawing C04-110B

100-Lead Plastic Thin Quad Flatpack (PF) - 14x14x1 mm Body 2.00 mm Footprint [TQFP]

Note: For the most current package drawings, please see the Microchip Packaging Specification located at http://www.microchip.com/packaging

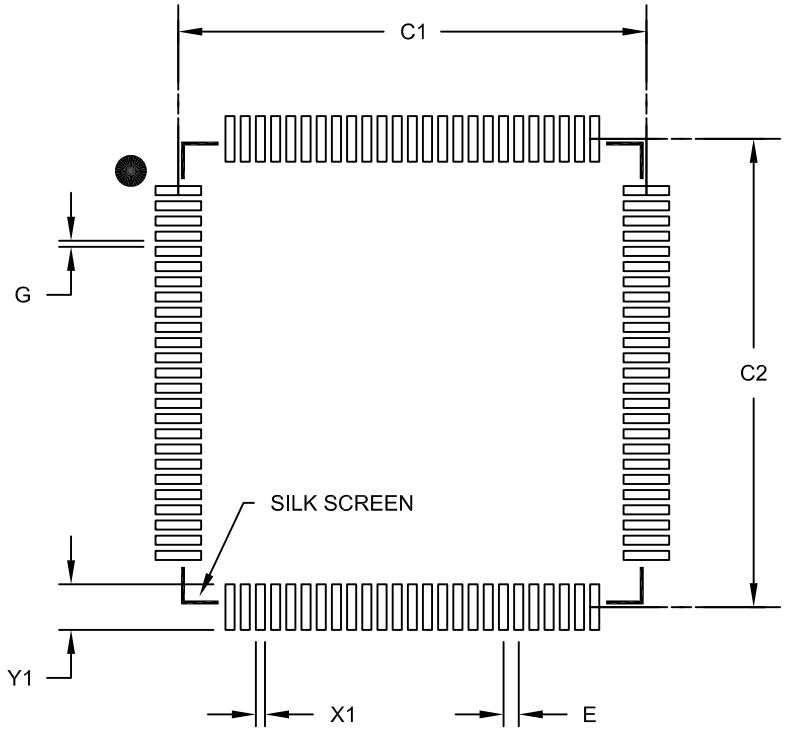

RECOMMENDED LAND PATTERN

Units		MILLIMETERS		
Dimension Limits		MIN	NOM	MAX
Contact Pitch	E		0.50 BSC	
Contact Pad Spacing	C1		15.40	
Contact Pad Spacing	C2		15.40	
Contact Pad Width (X100)	X1			0.30
Contact Pad Length (X100)	Y1			1.50
Distance Between Pads	G	0.20		

Notes:

1. Dimensioning and tolerancing per ASME Y14.5M
   BSC: Basic Dimension. Theoretically exact value shown without tolerances.

Microchip Technology Drawing No. C04-2110B

© 2009-2012 Microchip Technology Inc.

APPENDIX A: MIGRATING FROM dsPIC33FJXXXGPX06/X08/X10 DEVICES TO dsPIC33FJXXXGPX06A/X08A/X10A DEVICES

dsPIC33FJXXXGPX06A/X08A/X10A devices were designed to enhance the dsPIC33FJXXXGPX06/X08/X10 families of devices.

In general, the dsPIC33FJXXXGPX06A/X08A/X10A devices are backward-compatible with dsPIC33FJXXXGPX06/X08/X10 devices; however, manufacturing differences may cause dsPIC33FJXXXGPX06A/X08A/X10A devices to behave differently from dsPIC33FJXXXGPX06/X08/X10 devices. Therefore, complete system test and characterization is recommended if dsPIC33FJXXXGPX06A/X08A/X10A devices are used to replace dsPIC33FJXXXGPX06/X08/X10 devices.

The following enhancements were introduced:

- Extended temperature support of up to +125ºC
- Enhanced Flash module with higher endurance and retention
- New PLL Lock Enable configuration bit
- Added Timer5 trigger for ADC1 and Timer3 trigger for ADC2

APPENDIX B: REVISION HISTORY

Revision A (April 2009)

This is the initial released version of the document.

Revision B (October 2009)

The revision includes the following global update:

- Added Note 2 to the shaded table that appears at the beginning of each chapter. This new note provides information regarding the availability of registers and their associated bits

This revision also includes minor typographical and formatting changes throughout the data sheet text.

All other major changes are referenced by their respective section in the following table.

TABLE B-1: MAJOR SECTION UPDATES

Section Name	Update Description
"High-Performance, 16-Bit Digital Signal Controllers"	Added information on high temperature operation (see **"Operating Range"**).
Section 10.0 "Power-Saving Features"	Updated the last paragraph to clarify the number of cycles that occur prior to the start of instruction execution (see **Section 10.2.2 "Idle Mode"**).
Section 11.0 "I/O Ports"	Changed the reference to digital-only pins to 5V tolerant pins in the second paragraph of **Section 11.2 "Open-Drain Configuration"**.
Section 18.0 "Universal Asynchronous Receiver Transmitter (UART)"	Updated the two baud rate range features to: 10 Mbps to 38 bps at 40 MIPS.
Section 21.0 "10-Bit/12-Bit Analog-to-Digital Converter (ADC)"	Updated the ADCx block diagram (see Figure 21-1).
Section 22.0 "Special Features"	Updated the second paragraph and removed the fourth paragraph in **Section 22.1 "Configuration Bits"**. Updated the Device Configuration Register Map (see Table 22-1). Added the FPWRT<2:0> bit field for the FWDT register to the Configurative Bits Description table (see Table 22-1).
Section 25.0 "Electrical Characteristics"	Updated the Absolute Maximum Ratings for high temperature and added Note 4. Updated Power-Down Current parameters DC60d, DC60a, DC60b, and DC60d (see Table 25-7). Added I2Cx Bus Data Timing Requirements (Master Mode) parameter IM51 (see Table 25-36). Updated the SPIx Module Slave Mode (CKE = 1) Timing Characteristics (see Figure 25-12). Updated the Internal LPRC Accuracy parameters (see Table 25-19). Updated the ADC Module Specifications (12-bit Mode) parameters AD23a and AD24a (see Table 25-42). Updated the ADC Module Specifications (10-bit Mode) parameters AD23b and AD24b (see Table 25-43).
Section 26.0 "High Temperature Electrical Characteristics"	Added new chapter with high temperature specifications.
"Product Identification System"	Added the "H" definition for high temperature.

© 2009-2012 Microchip Technology Inc.

Revision C (March 2011)

This revision includes typographical and formatting changes throughout the data sheet text. In addition, all instances of VDDCORE have been removed.

All other major changes are referenced by their respective section in the following table.

TABLE B-2: MAJOR SECTION UPDATES

Section Name	Update Description
Section 2.0 "Guidelines for Getting Started with 16-Bit Digital Signal Controllers"	Updated the title of **Section 2.3 "CPU Logic Filter Capacitor Connection (VCAP)"**. The frequency limitation for device PLL start-up conditions was updated in **Section 2.7 "Oscillator Value Conditions on Device Start-up"**. The second paragraph in **Section 2.9 "Unused I/Os"** was updated.
Section 4.0 "Memory Organization"	The All Resets values for the following SFRs in the Timer Register Map were changed (see Table 4-6): • TMR1 • TMR2 • TMR3 • TMR4 • TMR5 • TMR6 • TMR7 • TMR8 • TMR9
Section 9.0 "Oscillator Configuration"	Added Note 3 to the OSCCON: Oscillator Control Register (see Register 9-1). Added Note 2 to the CLKDIV: Clock Divisor Register (see Register 9-2). Added Note 1 to the PLLFBD: PLL Feedback Divisor Register (see Register 9-3). Added Note 2 to the OSCTUN: FRC Oscillator Tuning Register (see Register 9-4).
Section 21.0 "10-Bit/12-Bit Analog-to-Digital Converter (ADC)"	Updated the VREFL references in the ADC1 module block diagram (see Figure 21-1).
Section 22.0 "Special Features"	Added a new paragraph and removed the third paragraph in **Section 22.1 "Configuration Bits"**. Added the column "RTSP Effects" to the Configuration Bits Descriptions (see Table 22-2).

TABLE B-2: MAJOR SECTION UPDATES (CONTINUED)

Section Name	Update Description
Section 25.0 "Electrical Characteristics"	Removed Note 4 from the DC Temperature and Voltage Specifications (see Table 25-4). Updated the maximum value for parameter DI19 and added parameters DI28, DI29, DI60a, DI60b, and DI60c to the I/O Pin Input Specifications (see Table 25-9). Removed Note 2 from the AC Characteristics: Internal RC Accuracy (see Table 25-18). Updated the characteristic description for parameter DI35 in the I/O Timing Requirements (see Table 25-20). Updated the ADC Module Specification minimum values for parameters AD05 and AD07, and updated the maximum value for parameter AD06 (see Table 25-41). Added Note 1 to the ADC Module Specifications (12-bit Mode) (see Table 25-42). Added Note 1 to the ADC Module Specifications (10-bit Mode) (see Table 25-43). Added DMA Read/Write Timing Requirements (see Table 25-46).
Section 26.0 "High Temperature Electrical Characteristics"	Updated all ambient temperature end range values to +150ºC throughout the chapter. Updated the storage temperature end range to +160ºC. Updated the maximum junction temperature from +145ºC to +155ºC. Updated the maximum values for High Temperature Devices in the Thermal Operating Conditions (see Table 26-2). Added Note 3 and updated the ADC Module Specifications (12-bit Mode), removing all parameters with the exception of HAD33a (see Table 26-16). Added Note 3 and updated the ADC Module Specifications (10-bit Mode), removing all parameters with the exception of HAD33b (see Table 26-17).

© 2009-2012 Microchip Technology Inc.

Revision D (June 2012)

This revision includes typographical and formatting changes throughout the data sheet text.

All other major changes are referenced by their respective section in the following table.

TABLE B-3: MAJOR SECTION UPDATES

Section Name	Update Description
Section 2.0 "Guidelines for Getting Started with 16-Bit Digital Signal Controllers"	Updated the Recommended Minimum Connection (see Figure 2-1).
Section 9.0 "Oscillator Configuration"	Updated the COSC<2:0> and NOSC<2:0> bit value definitions for '001' (see Register 9-1).
Section 21.0 "10-Bit/12-Bit Analog-to-Digital Converter (ADC)"	Updated the Analog-to-Digital Conversion Clock Period Block Diagram (see Figure 21-2).
Section 22.0 "Special Features"	Added Note 3 to the On-chip Voltage Regulator Connections (see Figure 22-1).
Section 25.0 "Electrical Characteristics"	Updated **"Absolute Maximum Ratings"**. Updated Operating MIPS vs. Voltage (see Table 25-1). Removed parameter DC18 from the DC Temperature and Voltage Specifications (see Table 25-4). Updated the notes in the following tables: • Table 25-5 • Table 25-6 • Table 25-7 • Table 25-8 Updated the I/O Pin Output Specifications (see Table 25-10). Updated the Conditions for parameter BO10 (see Table 25-11). Updated the Conditions for parameters D136b, D137b, and D138b (T_A = 150ºC) (see Table 25-12).
Section 26.0 "High Temperature Electrical Characteristics"	Updated **"Absolute Maximum Ratings"**. Updated the I/O Pin Output Specifications (see Table 26-6). Removed Table 25-7: DC Characteristics: Program Memory.

NOTES:

© 2009-2012 Microchip Technology Inc.

INDEX

A

A/D Converter 237
  DMA 237
  Initialization 237
  Key Features 237
AC Characteristics 282, 325
  ADC Module 328
  ADC Module (10-bit Mode) 328
  ADC Module (12-bit Mode) 328
  Internal RC Accuracy 284
  Load Conditions 282, 325
ADC Module
  ADC11 Register Map 55
  ADC2 Register Map 55
Alternate Interrupt Vector Table (AIVT) 89
Arithmetic Logic Unit (ALU) 33
Assembler
  MPASM Assembler 268

B

Barrel Shifter 37
Bit-Reversed Addressing 70
  Example 71
  Implementation 70
  Sequence Table (16-Entry) 71
Block Diagrams
  16-bit Timer1 Module 167
  A/D Module 238
  Connections for On-Chip Voltage Regulator 256
  DCI Module 230
  Device Clock 145, 147
  DSP Engine 34
  dsPIC33F 20
  dsPIC33F CPU Core 28
  ECAN Module 202
  Input Capture 175
  Output Compare 177
  PLL 147
  Reset System 83
  Shared Port Structure 163
  SPI 181
  Timer2 (16-bit) 171
  Timer2/3 (32-bit) 170
  UART 195
  Watchdog Timer (WDT) 257

C

C Compilers
  MPLAB C18 268
Clock Switching 153
  Enabling 153
  Sequence 153
Code Examples
  Erasing a Program Memory Page 81
  Initiating a Programming Sequence 82
  Loading Write Buffers 82
  Port Write/Read 164
  PWRSAV Instruction Syntax 155
Code Protection 251, 258
Configuration Bits 251
  Description (Table) 252
Configuration Register Map 251
Configuring Analog Port Pins 164
CPU
  Control Register 30
CPU Clocking System 146
  Options 146
  Selection 146
Customer Change Notification Service 357
Customer Notification Service 357
Customer Support 357

D

Data Accumulators and Adder/Subtractor 35
  Data Space Write Saturation 37
  Overflow and Saturation 35
  Round Logic 36
  Write Back 36
Data Address Space 41
  Alignment 41
  Memory Map for dsPIC33FJXXXGPX06A/X08A/X10A
    Devices with 16 KB RAM 43
  Memory Map for dsPIC33FJXXXGPX06A/X08A/X10A
    Devices with 30 KB RAM 44
  Memory Map for dsPIC33FJXXXGPX06A/X08A/X10A
    Devices with 8 KB RAM 42
  Near Data Space 41
  Software Stack 67
  Width 41
Data Converter Interface (DCI) Module 229
DC and AC Characteristics
  Graphs and Tables 331
DC Characteristics 272
  Doze Current (I_{DOZE}) 323
  High Temperature 322
  I/O Pin Input Specifications 278
  I/O Pin Output Specifications 280, 324
  Idle Current (I_{IDLE}) 275
  Operating Current (I_{DD}) 274
  Operating MIPS vs. Voltage 322
  Power-Down Current (I_{PD}) 276
  Power-down Current (I_{PD}) 322
  Program Memory 281
  Temperature and Voltage 322
  Temperature and Voltage Specifications 273
  Thermal Operating Conditions 322
DCI
  Buffer Control 229
  Buffer Data Alignment 229
  Introduction 229
  Transmit/Receive Shift Register 229
DCI I/O Pins 229
  COFS 229
  CSCK 229
  CSDI 229
  CSDO 229
DCI Module
  Register Map 64
Development Support 267
DMA Module
  DMA Register Map 56
DMAC Registers 136
  DMAxCNT 136
  DMAxCON 136

DMAxPAD 136
DMAxREQ 136
DMAxSTA 136
DMAxSTB 136
DSP Engine 33
Multiplier 35

E

ECAN Module
CiFMSKSEL2 register 221
ECAN1 Register Map (C1CTRL1.WIN = 0 or 1) 58
ECAN1 Register Map (C1CTRL1.WIN = 0) 58
ECAN1 Register Map (C1CTRL1.WIN = 1) 59
ECAN2 Register Map (C2CTRL1.WIN = 0 or 1) 61
ECAN2 Register Map (C2CTRL1.WIN = 0) 61, 62
Frame Types 201
Modes of Operation 203
Overview 201
ECAN Registers
Filter 15-8 Mask Selection Register (CiFMSKSEL2) 221
Electrical Characteristics 271
AC 282, 325
Enhanced CAN Module 201
Equations
Device Operating Frequency 146
Errata 16

F

Flash Program Memory 77
Control Registers 78
Operations 78
Programming Algorithm 81
RTSP Operation 78
Table Instructions 77
Flexible Configuration 251
FSCM
Delay for Crystal and PLL Clock Sources 87
Device Resets 87

H

High Temperature Electrical Characteristics 321

I

I/O Ports 163
Parallel I/O (PIO) 163
Write/Read Timing 164
I^2C
Operating Modes 187
Registers 187
I^2C Module
I2C1 Register Map 53
I2C2 Register Map 53
In-Circuit Debugger 258
In-Circuit Emulation 251
In-Circuit Serial Programming (ICSP) 251, 258
Input Capture
Registers 176
Input Change Notification Module 164
Instruction Addressing Modes 67
File Register Instructions 67
Fundamental Modes Supported 68
MAC Instructions 68
MCU Instructions 67
Move and Accumulator Instructions 68
Other Instructions 68
Instruction Set
Overview 262
Summary 259
Instruction-Based Power-Saving Modes 155
Idle 156
Sleep 155
Internal RC Oscillator
Use with WDT 257
Internet Address 357
Interrupt Control and Status Registers 93
IECx 93
IFSx 93
INTCON1 93
INTCON2 93
IPCx 93
Interrupt Setup Procedures 133
Initialization 133
Interrupt Disable 133
Interrupt Service Routine 133
Trap Service Routine 133
Interrupt Vector Table (IVT) 89
Interrupts Coincident with Power Save Instructions 156

J

JTAG Boundary Scan Interface 251

M

Memory Organization 39
Microchip Internet Web Site 357
Modes of Operation
Disable 203
Initialization 203
Listen All Messages 203
Listen Only 203
Loopback 203
Normal Operation 203
Modulo Addressing 68
Applicability 70
Operation Example 69
Start and End Address 69
W Address Register Selection 69
MPLAB ASM30 Assembler, Linker, Librarian 268
MPLAB Integrated Development Environment Software 267
MPLAB PM3 Device Programmer 270
MPLAB REAL ICE In-Circuit Emulator System 269
MPLINK Object Linker/MPLIB Object Librarian 268

N

NVM Module
Register Map 66

O

Open-Drain Configuration 164
Output Compare 177

P

Packaging 335
Details 339
Marking 335, 336
Peripheral Module Disable (PMD) 156
Pinout I/O Descriptions (table) 21
PMD Module
Register Map 66
POR and Long Oscillator Start-up Times 87

© 2009-2012 Microchip Technology Inc.

PORTA
Register Map 64
PORTB
Register Map 64
PORTC
Register Map 65
PORTD
Register Map 65
PORTE
Register Map 65
PORTF
Register Map 65
PORTG
Register Map 66
Power-Saving Features 155
Clock Frequency and Switching 155
Program Address Space 39
Construction 72
Data Access from Program Memory
Using Program Space Visibility 75
Data Access from Program Memory
Using Table Instructions 74
Data Access from, Address Generation 73
Memory Map 39
Table Read Instructions
TBLRDH 74
TBLRDL 74
Visibility Operation 75
Program Memory
Interrupt Vector 40
Organization 40
Reset Vector 40

R

Reader Response 358
Registers
ADxCHS0 (ADCx Input Channel 0 Select 247
ADxCHS123 (ADCx Input Channel 1, 2, 3 Select) ... 246
ADxCON1 (ADCx Control 1) 241
ADxCON2 (ADCx Control 2) 243
ADxCON3 (ADCx Control 3) 244
ADxCON4 (ADCx Control 4) 245
ADxCSSH (ADCx Input Scan Select High) 248
ADxCSSL (ADCx Input Scan Select Low) 248
ADxPCFGH (ADCx Port Configuration High) 249
ADxPCFGL (ADCx Port Configuration Low) 249
CiBUFPNT1 (ECAN Filter 0-3 Buffer Pointer) 215
CiBUFPNT2 (ECAN Filter 4-7 Buffer Pointer) 216
CiBUFPNT3 (ECAN Filter 8-11 Buffer Pointer) 217
CiBUFPNT4 (ECAN Filter 12-15 Buffer Pointer) 218
CiCFG1 (ECAN Baud Rate Configuration 1) 212
CiCFG2 (ECAN Baud Rate Configuration 2) 213
CiCTRL1 (ECAN Control 1) 204
CiCTRL2 (ECAN Control 2) 205
CiEC (ECAN Transmit/Receive Error Count) 211
CiFCTRL (ECAN FIFO Control) 207
CiFEN1 (ECAN Acceptance Filter Enable) 214
CiFIFO (ECAN FIFO Status) 208
CiFMSKSEL1 (ECAN Filter 7-0 Mask
Selection) 220, 221
CiINTE (ECAN Interrupt Enable) 210
CiINTF (ECAN Interrupt Flag) 209
CiRXFnEID (ECAN Acceptance Filter n
Extended Identifier) 219
CiRXFnSID (ECAN Acceptance Filter n
Standard Identifier) 219
CiRXFUL1 (ECAN Receive Buffer Full 1) 223
CiRXFUL2 (ECAN Receive Buffer Full 2) 223
CiRXMnEID (ECAN Acceptance Filter Mask n
Extended Identifier) 222
CiRXMnSID (ECAN Acceptance Filter Mask n
Standard Identifier) 222
CiRXOVF1 (ECAN Receive Buffer Overflow 1) 224
CiRXOVF2 (ECAN Receive Buffer Overflow 2) 224
CiTRBnDLC (ECAN Buffer n Data
Length Control) 227
CiTRBnDm (ECAN Buffer n Data Field Byte m) 227
CiTRBnEID (ECAN Buffer n Extended Identifier) 226
CiTRBnSID (ECAN Buffer n Standard Identifier) 226
CiTRBnSTAT (ECAN Receive Buffer n Status) 228
CiTRmnCON (ECAN TX/RX Buffer m Control) 225
CiVEC (ECAN Interrupt Code) 206
CLKDIV (Clock Divisor) 150
CORCON (Core Control) 32, 94
DCICON1 (DCI Control 1) 231
DCICON2 (DCI Control 2) 232
DCICON3 (DCI Control 3) 233
DCISTAT (DCI Status) 234
DMACS0 (DMA Controller Status 0) 141
DMACS1 (DMA Controller Status 1) 143
DMAxCNT (DMA Channel x Transfer Count) 140
DMAxCON (DMA Channel x Control) 137
DMAxPAD (DMA Channel x Peripheral Address) 140
DMAxREQ (DMA Channel x IRQ Select) 138
DMAxSTA (DMA Channel x RAM Start
Address A) 139
DMAxSTB (DMA Channel x RAM Start
Address B) 139
DSADR (Most Recent DMA RAM Address) 144
I2CxCON (I2Cx Control) 190
I2CxMSK (I2Cx Slave Mode Address Mask) 194
I2CxSTAT (I2Cx Status) 192
ICxCON (Input Capture x Control) 176
IEC0 (Interrupt Enable Control 0) 106
IEC1 (Interrupt Enable Control 1) 108
IEC2 (Interrupt Enable Control 2) 110
IEC3 (Interrupt Enable Control 3) 112
IEC4 (Interrupt Enable Control 4) 113
IFS0 (Interrupt Flag Status 0) 98
IFS1 (Interrupt Flag Status 1) 100
IFS2 (Interrupt Flag Status 2) 102
IFS3 (Interrupt Flag Status 3) 104
IFS4 (Interrupt Flag Status 4) 105
INTCON1 (Interrupt Control 1) 95
INTCON2 (Interrupt Control 2) 97
INTTREG Interrupt Control and Status Register 132
IPC0 (Interrupt Priority Control 0) 114
IPC1 (Interrupt Priority Control 1) 115
IPC10 (Interrupt Priority Control 10) 124
IPC11 (Interrupt Priority Control 11) 125
IPC12 (Interrupt Priority Control 12) 126
IPC13 (Interrupt Priority Control 13) 127
IPC14 (Interrupt Priority Control 14) 128
IPC15 (Interrupt Priority Control 15) 129
IPC16 (Interrupt Priority Control 16) 130
IPC17 (Interrupt Priority Control 17) 131
IPC2 (Interrupt Priority Control 2) 116
IPC3 (Interrupt Priority Control 3) 117
IPC4 (Interrupt Priority Control 4) 118
IPC5 (Interrupt Priority Control 5) 119
IPC6 (Interrupt Priority Control 6) 120

IPC7 (Interrupt Priority Control 7) 121
IPC8 (Interrupt Priority Control 8) 122
IPC9 (Interrupt Priority Control 9) 123
NVMCOM (Flash Memory Control) 79, 80
OCxCON (Output Compare x Control) 179
OSCCON (Oscillator Control) 148
OSCTUN (FRC Oscillator Tuning) 152
PLLFBD (PLL Feedback Divisor) 151
PMD1 (Peripheral Module Disable Control Register 1) 157
PMD1 (Peripheral Module Disable Control Register 1) 157
PMD2 (Peripheral Module Disable Control Register 2) 159
PMD3 (Peripheral Module Disable Control Register 3) 161
PMD3 (Peripheral Module Disable Control Register 3) 161
RCON (Reset Control) 84
RSCON (DCI Receive Slot Control) 235
SPIxCON1 (SPIx Control 1) 184
SPIxCON2 (SPIx Control 2) 186
SPIxSTAT (SPIx Status and Control) 183
SR (CPU Status) 94
T1CON (Timer1 Control) 168
TSCON (DCI Transmit Slot Control) 235
TxCON (T2CON, T4CON, T6CON or T8CON Control) 172
TyCON (T3CON, T5CON, T7CON or T9CON Control) 173
UxMODE (UARTx Mode) 197
UxSTA (UARTx Status and Control) 199
Reset
Clock Source Selection 86
Special Function Register Reset States 87
Times 86
Reset Sequence 89
Resets 83

S

Serial Peripheral Interface (SPI) 181
Software Simulator (MPLAB SIM) 269
Software Stack Pointer, Frame Pointer
CALLL Stack Frame 67
Special Features of the CPU 251
SPI Module
SPI1 Register Map 54
SPI2 Register Map 54
Symbols Used in Opcode Descriptions 260
System Control
Register Map 66

T

Temperature and Voltage Specifications
AC 282, 325
Timer1 167
Timer2/3, Timer4/5, Timer6/7 and Timer8/9 169
Timing Characteristics
CLKO and I/O 285
Timing Diagrams
10-bit A/D Conversion (CHPS<1:0> = 01, SIMSAM = 0, ASAM = 0, SSRC<2:0> = 000) 317
10-bit A/D Conversion (CHPS<1:0> = 01, SIMSAM = 0, ASAM = 1, SSRC<2:0> = 111, SAMC<4:0> = 00001) 319
12-bit A/D Conversion (ASAM = 0, SSRC = 000) 315
CAN I/O 311
DCI AC-Link Mode 310
DCI Multi -Channel, I^{2}S Modes 308
External Clock 283
I2Cx Bus Data (Master Mode) 304
I2Cx Bus Data (Slave Mode) 306
I2Cx Bus Start/Stop Bits (Master Mode) 304
I2Cx Bus Start/Stop Bits (Slave Mode) 306
Input Capture (CAPx) 290
OC/PWM 291
Output Compare (OCx) 290
Reset, Watchdog Timer, Oscillator Start-up Timer and Power-up Timer 286
Timer1, 2, 3, 4, 5, 6, 7, 8, 9 External Clock 288
Timing Requirements
ADC Conversion (10-bit mode) 329
ADC Conversion (12-bit Mode) 329
CLKO and I/O 285
DCI AC-Link Mode 310, 312
DCI Multi-Channel, I^{2}S Modes 309, 312
External Clock 283
Input Capture 290
SPIx Master Mode (CKE = 0) 326
SPIx Module Master Mode (CKE = 1) 326
SPIx Module Slave Mode (CKE = 0) 327
SPIx Module Slave Mode (CKE = 1) 327
Timing Specifications
10-bit A/D Conversion Requirements 319
12-bit A/D Conversion Requirements 316
CAN I/O Requirements 311
I2Cx Bus Data Requirements (Master Mode) 305
I2Cx Bus Data Requirements (Slave Mode) 307
Output Compare Requirements 290
PLL Clock 284, 325
Reset, Watchdog Timer, Oscillator Start-up Timer, Power-up Timer and Brown-out Reset Requirements 287
Simple OC/PWM Mode Requirements 291
Timer1 External Clock Requirements 288
Timer2, Timer4, Timer6 and Timer8 External Clock Requirements 289
Timer3, Timer5, Timer7 and Timer9 External Clock Requirements 289

U

UART Module
UART1 Register Map 54
UART2 Register Map 54

V

Voltage Regulator (On-Chip) 256

W

Watchdog Timer (WDT) 251, 257
Programming Considerations 257
WWW Address 357
WWW, On-Line Support 16

© 2009-2012 Microchip Technology Inc.

THE MICROCHIP WEB SITE

Microchip provides online support via our WWW site at www.microchip.com. This web site is used as a means to make files and information easily available to customers. Accessible by using your favorite Internet browser, the web site contains the following information:

- **Product Support** – Data sheets and errata, application notes and sample programs, design resources, user's guides and hardware support documents, latest software releases and archived software
- **General Technical Support** – Frequently Asked Questions (FAQs), technical support requests, online discussion groups, Microchip consultant program member listing
- **Business of Microchip** – Product selector and ordering guides, latest Microchip press releases, listing of seminars and events, listings of Microchip sales offices, distributors and factory representatives

CUSTOMER CHANGE NOTIFICATION SERVICE

Microchip's customer notification service helps keep customers current on Microchip products. Subscribers will receive e-mail notification whenever there are changes, updates, revisions or errata related to a specified product family or development tool of interest.

To register, access the Microchip web site at www.microchip.com. Under "Support", click on "Customer Change Notification" and follow the registration instructions.

CUSTOMER SUPPORT

Users of Microchip products can receive assistance through several channels:

- Distributor or Representative
- Local Sales Office
- Field Application Engineer (FAE)
- Technical Support
- Development Systems Information Line

Customers should contact their distributor, representative or field application engineer (FAE) for support. Local sales offices are also available to help customers. A listing of sales offices and locations is included in the back of this document.

Technical support is available through the web site at: http://microchip.com/support

READER RESPONSE

It is our intention to provide you with the best documentation possible to ensure successful use of your Microchip product. If you wish to provide your comments on organization, clarity, subject matter, and ways in which our documentation can better serve you, please FAX your comments to the Technical Publications Manager at (480) 792-4150.

Please list the following information, and use this outline to provide us with your comments about this document.

TO: Technical Publications Manager

RE: Reader Response

Total Pages Sent _____

From: Name _____

Company _____

Address _____

City / State / ZIP / Country _____

Telephone: (_____) _____ - _____ FAX: (_____) _____ - _____

Application (optional):

Would you like a reply? ___Y ___N

Device: dsPIC33FJXXXGPX06A/X08A/X10A Literature Number: DS70593D

Questions:

1. What are the best features of this document?

_____

_____

2. How does this document meet your hardware and software development needs?

_____

_____

3. Do you find the organization of this document easy to follow? If not, why?

_____

_____

4. What additions to the document do you think would enhance the structure and subject?

_____

_____

5. What deletions from the document could be made without affecting the overall usefulness?

_____

_____

6. Is there any incorrect or misleading information (what and where)?

_____

_____

7. How would you improve this document?

_____

_____

© 2009-2012 Microchip Technology Inc.

PRODUCT IDENTIFICATION SYSTEM

To order or obtain information, e.g., on pricing or delivery, refer to the factory or the listed sales office.

dsPIC 33 FJ 256 GP7 10 A T I / PT - XXX

- **Microchip Trademark**
- **Architecture**
- **Flash Memory Family**
- **Program Memory Size (KB)**
- **Product Group**
- **Pin Count**
- **Revision Level**
- **Tape and Reel Flag (if applicable)**
- **Temperature Range**
- **Package**
- **Pattern**

Architecture:	33	=	16-bit Digital Signal Controller
Flash Memory Family:	FJ	=	Flash program memory, 3.3V
Product Group:	GP2	=	General purpose family
	GP3	=	General purpose family
	GP5	=	General purpose family
	GP7	=	General purpose family
Pin Count:	06	=	64-pin
	08	=	80-pin
	10	=	100-pin
Temperature Range:	I	=	-40°C to+85°C(Industrial)
	E	=	-40°C to+125°C(Extended)
	H	=	-40°C to+150°C(High)
Package:	PT	=	10x10 or 12x12 mm TQFP (Thin Quad Flatpack)
	PF	=	14x14 mm TQFP (Thin Quad Flatpack)
	MR	=	9x9mm QFN (Plastic Quad Flatpack)
Pattern	Three-digit QTP, SQTP, Code or Special Requirements (blank otherwise)		
	ES	=	Engineering Sample

Examples:

a) dsPIC33FJ256GP710AI/PT: General-purpose dsPIC33, 64 KB program memory, 100-pin, Industrial temp., TQFP package.

NOTES:

© 2009-2012 Microchip Technology Inc.

Note the following details of the code protection feature on Microchip devices:

- Microchip products meet the specification contained in their particular Microchip Data Sheet.
- Microchip believes that its family of products is one of the most secure families of its kind on the market today, when used in the intended manner and under normal conditions.
- There are dishonest and possibly illegal methods used to breach the code protection feature. All of these methods, to our knowledge, require using the Microchip products in a manner outside the operating specifications contained in Microchip's Data Sheets. Most likely, the person doing so is engaged in theft of intellectual property.
- Microchip is willing to work with the customer who is concerned about the integrity of their code.
- Neither Microchip nor any other semiconductor manufacturer can guarantee the security of their code. Code protection does not mean that we are guaranteeing the product as "unbreakable."

Code protection is constantly evolving. We at Microchip are committed to continuously improving the code protection features of our products. Attempts to break Microchip's code protection feature may be a violation of the Digital Millennium Copyright Act. If such acts allow unauthorized access to your software or other copyrighted work, you may have a right to sue for relief under that Act.

Information contained in this publication regarding device applications and the like is provided only for your convenience and may be superseded by updates. It is your responsibility to ensure that your application meets with your specifications. MICROCHIP MAKES NO REPRESENTATIONS OR WARRANTIES OF ANY KIND WHETHER EXPRESS OR IMPLIED, WRITTEN OR ORAL, STATUTORY OR OTHERWISE, RELATED TO THE INFORMATION, INCLUDING BUT NOT LIMITED TO ITS CONDITION, QUALITY, PERFORMANCE, MERCHANTABILITY OR FITNESS FOR PURPOSE**.** Microchip disclaims all liability arising from this information and its use. Use of Microchip devices in life support and/or safety applications is entirely at the buyer's risk, and the buyer agrees to defend, indemnify and hold harmless Microchip from any and all damages, claims, suits, or expenses resulting from such use. No licenses are conveyed, implicitly or otherwise, under any Microchip intellectual property rights.

QUALITY MANAGEMENT SYSTEM CERTIFIED BY DNV

═ ISO/TS 16949 ═

Trademarks

The Microchip name and logo, the Microchip logo, dsPIC, KEELOQ, KEELOQ logo, MPLAB, PIC, PICmicro, PICSTART, PIC32 logo, rfPIC and UNI/O are registered trademarks of Microchip Technology Incorporated in the U.S.A. and other countries.

FilterLab, Hampshire, HI-TECH C, Linear Active Thermistor, MXDEV, MXLAB, SEEVAL and The Embedded Control Solutions Company are registered trademarks of Microchip Technology Incorporated in the U.S.A.

Analog-for-the-Digital Age, Application Maestro, chipKIT, chipKIT logo, CodeGuard, dsPICDEM, dsPICDEM.net, dsPICworks, dsSPEAK, ECAN, ECONOMONITOR, FanSense, HI-TIDE, In-Circuit Serial Programming, ICSP, Mindi, MiWi, MPASM, MPLAB Certified logo, MPLIB, MPLINK, mTouch, Omniscient Code Generation, PICC, PICC-18, PICDEM, PICDEM.net, PICkit, PICtail, REAL ICE, rfLAB, Select Mode, Total Endurance, TSHARC, UniWinDriver, WiperLock and ZENA are trademarks of Microchip Technology Incorporated in the U.S.A. and other countries.

SQTP is a service mark of Microchip Technology Incorporated in the U.S.A.

All other trademarks mentioned herein are property of their respective companies.

© 2009-2012, Microchip Technology Incorporated, Printed in the U.S.A., All Rights Reserved.

Printed on recycled paper.

ISBN: 978-1-62076-344-5

Microchip received ISO/TS-16949:2009 certification for its worldwide headquarters, design and wafer fabrication facilities in Chandler and Tempe, Arizona; Gresham, Oregon and design centers in California and India. The Company's quality system processes and procedures are for its PIC® MCUs and dsPIC® DSCs, KEELOQ® code hopping devices, Serial EEPROMs, microperipherals, nonvolatile memory and analog products. In addition, Microchip's quality system for the design and manufacture of development systems is ISO 9001:2000 certified.

Worldwide Sales and Service

AMERICAS

Corporate Office
2355 West Chandler Blvd.
Chandler, AZ 85224-6199
Tel: 480-792-7200
Fax: 480-792-7277
Technical Support:
http://www.microchip.com/support
Web Address:
www.microchip.com

Atlanta
Duluth, GA
Tel: 678-957-9614
Fax: 678-957-1455

Boston
Westborough, MA
Tel: 774-760-0087
Fax: 774-760-0088

Chicago
Itasca, IL
Tel: 630-285-0071
Fax: 630-285-0075

Cleveland
Independence, OH
Tel: 216-447-0464
Fax: 216-447-0643

Dallas
Addison, TX
Tel: 972-818-7423
Fax: 972-818-2924

Detroit
Farmington Hills, MI
Tel: 248-538-2250
Fax: 248-538-2260

Indianapolis
Noblesville, IN
Tel: 317-773-8323
Fax: 317-773-5453

Los Angeles
Mission Viejo, CA
Tel: 949-462-9523
Fax: 949-462-9608

Santa Clara
Santa Clara, CA
Tel: 408-961-6444
Fax: 408-961-6445

Toronto
Mississauga, Ontario, Canada
Tel: 905-673-0699
Fax: 905-673-6509

ASIA/PACIFIC

Asia Pacific Office
Suites 3707-14, 37th Floor
Tower 6, The Gateway
Harbour City, Kowloon
Hong Kong
Tel: 852-2401-1200
Fax: 852-2401-3431

Australia - Sydney
Tel: 61-2-9868-6733
Fax: 61-2-9868-6755

China - Beijing
Tel: 86-10-8569-7000
Fax: 86-10-8528-2104

China - Chengdu
Tel: 86-28-8665-5511
Fax: 86-28-8665-7889

China - Chongqing
Tel: 86-23-8980-9588
Fax: 86-23-8980-9500

China - Hangzhou
Tel: 86-571-2819-3187
Fax: 86-571-2819-3189

China - Hong Kong SAR
Tel: 852-2401-1200
Fax: 852-2401-3431

China - Nanjing
Tel: 86-25-8473-2460
Fax: 86-25-8473-2470

China - Qingdao
Tel: 86-532-8502-7355
Fax: 86-532-8502-7205

China - Shanghai
Tel: 86-21-5407-5533
Fax: 86-21-5407-5066

China - Shenyang
Tel: 86-24-2334-2829
Fax: 86-24-2334-2393

China - Shenzhen
Tel: 86-755-8203-2660
Fax: 86-755-8203-1760

China - Wuhan
Tel: 86-27-5980-5300
Fax: 86-27-5980-5118

China - Xian
Tel: 86-29-8833-7252
Fax: 86-29-8833-7256

China - Xiamen
Tel: 86-592-2388138
Fax: 86-592-2388130

China - Zhuhai
Tel: 86-756-3210040
Fax: 86-756-3210049

ASIA/PACIFIC

India - Bangalore
Tel: 91-80-3090-4444
Fax: 91-80-3090-4123

India - New Delhi
Tel: 91-11-4160-8631
Fax: 91-11-4160-8632

India - Pune
Tel: 91-20-2566-1512
Fax: 91-20-2566-1513

Japan - Osaka
Tel: 81-66-152-7160
Fax: 81-66-152-9310

Japan - Yokohama
Tel: 81-45-471- 6166
Fax: 81-45-471-6122

Korea - Daegu
Tel: 82-53-744-4301
Fax: 82-53-744-4302

Korea - Seoul
Tel: 82-2-554-7200
Fax: 82-2-558-5932 or
82-2-558-5934

Malaysia - Kuala Lumpur
Tel: 60-3-6201-9857
Fax: 60-3-6201-9859

Malaysia - Penang
Tel: 60-4-227-8870
Fax: 60-4-227-4068

Philippines - Manila
Tel: 63-2-634-9065
Fax: 63-2-634-9069

Singapore
Tel: 65-6334-8870
Fax: 65-6334-8850

Taiwan - Hsin Chu
Tel: 886-3-5778-366
Fax: 886-3-5770-955

Taiwan - Kaohsiung
Tel: 886-7-536-4818
Fax: 886-7-330-9305

Taiwan - Taipei
Tel: 886-2-2500-6610
Fax: 886-2-2508-0102

Thailand - Bangkok
Tel: 66-2-694-1351
Fax: 66-2-694-1350

EUROPE

Austria - Wels
Tel: 43-7242-2244-39
Fax: 43-7242-2244-393

Denmark - Copenhagen
Tel: 45-4450-2828
Fax: 45-4485-2829

France - Paris
Tel: 33-1-69-53-63-20
Fax: 33-1-69-30-90-79

Germany - Munich
Tel: 49-89-627-144-0
Fax: 49-89-627-144-44

Italy - Milan
Tel: 39-0331-742611
Fax: 39-0331-466781

Netherlands - Drunen
Tel: 31-416-690399
Fax: 31-416-690340

Spain - Madrid
Tel: 34-91-708-08-90
Fax: 34-91-708-08-91

UK - Wokingham
Tel: 44-118-921-5869
Fax: 44-118-921-5820

11/29/11

© 2009-2012 Microchip Technology Inc.

Мы молодая и активно развивающаяся компания в области поставок электронных компонентов. Мы поставляем электронные компоненты отечественного и импортного производства напрямую от производителей и с крупнейших складов мира.

Благодаря сотрудничеству с мировыми поставщиками мы осуществляем комплексные и плановые поставки широчайшего спектра электронных компонентов.

Собственная эффективная логистика и склад в обеспечивает надежную поставку продукции в точно указанные сроки по всей России.

Мы осуществляем техническую поддержку нашим клиентам и предпродажную проверку качества продукции. На все поставляемые продукты мы предоставляем гарантию .

Осуществляем поставки продукции под контролем ВП МО РФ на предприятия военно-промышленного комплекса России , а также работаем в рамках 275 ФЗ с открытием отдельных счетов в уполномоченном банке. Система менеджмента качества компании соответствует требованиям ГОСТ ISO 9001.

Минимальные сроки поставки, гибкие цены, неограниченный ассортимент и индивидуальный подход к клиентам являются основой для выстраивания долгосрочного и эффективного сотрудничества с предприятиями радиоэлектронной промышленности, предприятиями ВПК и научно-исследовательскими институтами России.

С нами вы становитесь еще успешнее!

Наши контакты:

Телефон: +7 812 627 14 35

Электронная почта: sales@st-electron.ru

Адрес: 198099, Санкт-Петербург, Промышленная ул, дом № 19, литера Н, помещение 100-Н Офис 331