Series 96

Characteristics
The Series 96 PCB pushbuttons offer three different lens widths:

- 17.4 × 17.4 mm
- 12.4 × 17.4 mm
- 14.8 × 17.4 mm

Functions
The Series 96 incorporates the following functions:

- Indicator
- Pushbutton
- Illuminated pushbutton

Market segments
The EAO Series 96 is especially suited for applications in the segment:

- Audio and video

Please refer to the EAO website to obtain detailed information regarding this series **www.products.eao.com**
Configure a product to your exact needs and request a quotation.

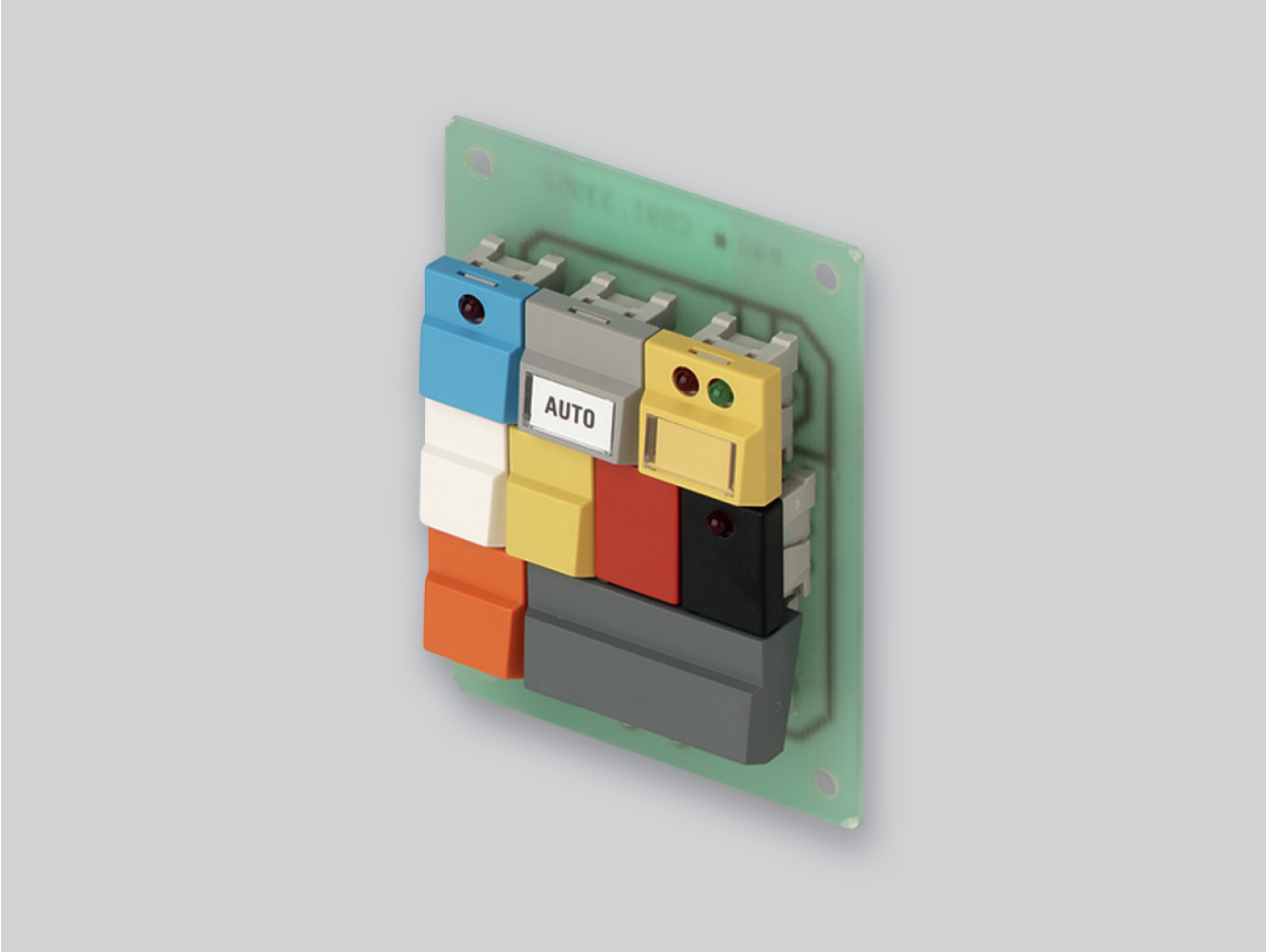

Übersicht

PC Pushbuttons	
Illuminated pushbutton	4
Accessories	**6**
Drawings	**13**
Technical data	**14**
Marking	**15**
Application guidelines	**16**
Index	**17**

Illuminated pushbutton IP 67

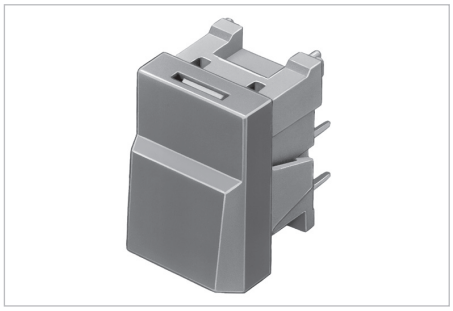

Product can differ from the current configuration.

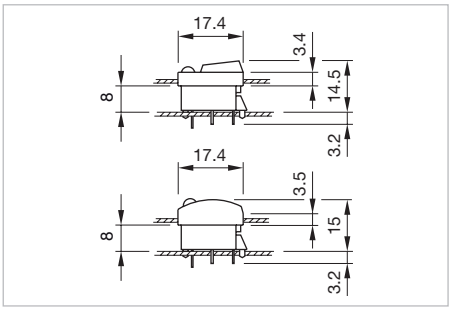

Dimensions [mm]

Equipment consisting of (schematic overview)

Lens *page 6*

Single-LED *page 11*

Actuator

Each Part Number listed below includes all the black components shown in the 3D-drawing.

To obtain a complete unit, please select the red components from the pages shown.

Additional Information

- For lens 17.4 x 17.4 mm, 14.8 x 17.4 mm, 12.4 x 17.4 mm

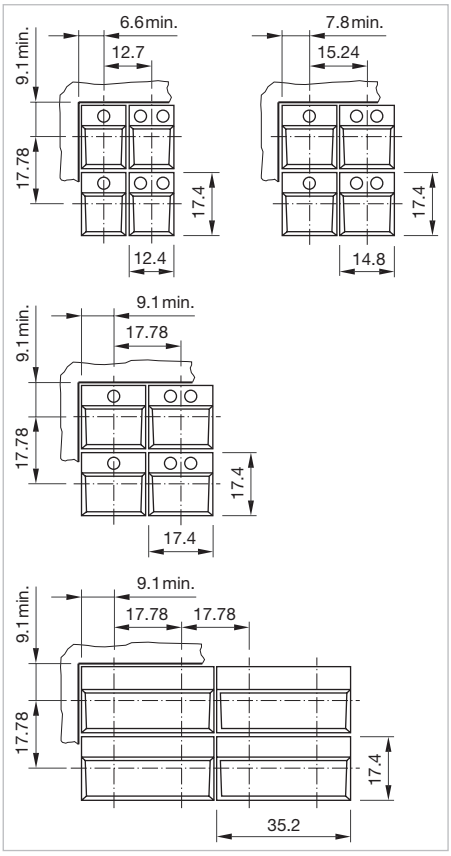

Mounting cut-outs [mm]

Switching system	Contacts	Terminal	Part No.	Compo-nent layout	Wiring diagram	Weight
Illuminated pushbutton						
Snap-action switching element	1 C	PCB	**96-323.837**	1	1	0.002 kg

Contacts: C = Changeover
The component layouts you will find from page 13

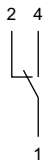

Wiring diagram 1

Front

Lens standard single

Lens	Colour	Switching action	Recess for LED	Part No.	Weight
Lens standard single square, 17.4 x 17.4 mm					
Plastic black	RAL 9011	B		**96-931.0**	0.001 kg
Plastic red	RAL 3016	B		**96-931.2**	0.001 kg
Plastic green	RAL 6005	B		**96-931.5**	0.001 kg
Plastic grey	RAL 7012	B		**96-931.8**	0.001 kg
Plastic white		B		**98-931.9**	0.001 kg
Lens standard single square, 17.4 x 17.4 mm					
Plastic black	RAL 9011	B	1	**96-932.0**	0.001 kg
Plastic red	RAL 3016	B	1	**96-932.2**	0.001 kg
Plastic green	RAL 6005	B	1	**96-932.5**	0.001 kg
Plastic grey	RAL 7012	B	1	**96-932.8**	0.001 kg
Plastic white		B	1	**98-932.9**	0.001 kg
Lens standard single square, 17.4 x 17.4 mm					
Plastic black	RAL 9011	B	2	**96-933.0**	0.001 kg
Plastic red	RAL 3016	B	2	**96-933.2**	0.001 kg
Plastic green	RAL 6005	B	2	**98-933.5**	0.001 kg
Plastic grey	RAL 7012	B	2	**96-933.8**	0.001 kg
Plastic white		B	2	**98-933.9**	0.001 kg
Lens standard single square, 17.4 x 17.4 mm					
Plastic black	RAL 9011	C		**96-935.0**	0.001 kg
Plastic red	RAL 3016	C		**96-935.2**	0.001 kg
Plastic green	RAL 6005	C		**96-935.5**	0.001 kg
Plastic grey	RAL 7012	C		**96-935.8**	0.001 kg
Plastic white		C		**98-935.9**	0.001 kg
Lens standard single square, 17.4 x 17.4 mm					
Plastic black	RAL 9011	C	1	**96-936.0**	0.001 kg
Plastic red	RAL 3016	C	1	**96-936.2**	0.001 kg
Plastic green	RAL 6005	C	1	**96-936.5**	0.001 kg
Plastic grey	RAL 7012	C	1	**96-936.8**	0.001 kg
Plastic white		C	1	**98-936.9**	0.001 kg

Switching action: B = Momentary, C = Maintained

Lens	Colour	Switching action	Recess for LED	Part No.	Weight
Lens standard single square, 17.4 x 17.4 mm					
Plastic black	RAL 9011	C	2	**96-937.0**	0.001 kg
Plastic red	RAL 3016	C	2	**96-937.2**	0.001 kg
Plastic green	RAL 6005	C	2	**96-937.5**	0.001 kg
Plastic grey	RAL 7012	C	2	**96-937.8**	0.001 kg
Plastic white		C	2	**98-937.9**	0.001 kg
Lens standard single rectangular, 14.8 x 17.4 mm					
Plastic black	RAL 9011	B		**96-921.0**	0.001 kg
Plastic red	RAL 3016	B		**96-921.2**	0.001 kg
Plastic green	RAL 6005	B		**96-921.5**	0.001 kg
Plastic grey	RAL 7012	B		**96-921.8**	0.001 kg
Plastic white		B		**98-921.9**	0.001 kg
Lens standard single rectangular, 14.8 x 17.4 mm					
Plastic black	RAL 9011	B	1	**96-922.0**	0.001 kg
Plastic red	RAL 3016	B	1	**96-922.2**	0.001 kg
Plastic green	RAL 6005	B	1	**96-922.5**	0.001 kg
Plastic grey	RAL 7012	B	1	**96-922.8**	0.001 kg
Plastic white		B	1	**98-922.9**	0.001 kg
Lens standard single rectangular, 14.8 x 17.4 mm					
Plastic black	RAL 9011	B	2	**96-923.0**	0.001 kg
Plastic red	RAL 3016	B	2	**96-923.2**	0.001 kg
Plastic green	RAL 6005	B	2	**96-923.5**	0.001 kg
Plastic grey	RAL 7012	B	2	**96-923.8**	0.001 kg
Plastic white		B	2	**98-923.9**	0.001 kg
Lens standard single rectangular, 14.8 x 17.4 mm					
Plastic black	RAL 9011	C		**96-925.0**	0.001 kg
Plastic red	RAL 3016	C		**96-925.2**	0.001 kg
Plastic green	RAL 6005	C		**96-925.5**	0.001 kg
Plastic grey	RAL 7012	C		**96-925.8**	0.001 kg
Plastic white		C		**98-925.9**	0.001 kg

Switching action: B = Momentary, C = Maintained

96 Accessories

Lens	Colour	Switching action	Recess for LED	Part No.	Weight
Lens standard single rectangular, 14.8 x 17.4 mm					
Plastic black	RAL 9011	C	1	**96-926.0**	0.001 kg
Plastic red	RAL 3016	C	1	**96-926.2**	0.001 kg
Plastic green	RAL 6005	C	1	**96-926.5**	0.001 kg
Plastic grey	RAL 7012	C	1	**96-926.8**	0.001 kg
Plastic white		C	1	**98-926.9**	0.001 kg
Lens standard single rectangular, 14.8 x 17.4 mm					
Plastic black	RAL 9011	C	2	**96-927.0**	0.001 kg
Plastic red	RAL 3016	C	2	**96-927.2**	0.001 kg
Plastic green	RAL 6005	C	2	**96-927.5**	0.001 kg
Plastic grey	RAL 7012	C	2	**96-927.8**	0.001 kg
Plastic white		C	2	**98-927.9**	0.001 kg
Lens standard single rectangular, 12.4 x 17.4 mm					
Plastic black	RAL 9011	B		**96-901.0**	0.001 kg
Plastic red	RAL 3016	B		**96-901.2**	0.001 kg
Plastic green	RAL 6005	B		**96-901.5**	0.001 kg
Plastic grey	RAL 7012	B		**96-901.8**	0.001 kg
Plastic white		B		**98-901.9**	0.001 kg
Lens standard single rectangular, 12.4 x 17.4 mm					
Plastic black	RAL 9011	B	1	**96-902.0**	0.001 kg
Plastic red	RAL 3016	B	1	**96-902.2**	0.001 kg
Plastic green	RAL 6005	B	1	**96-902.5**	0.001 kg
Plastic grey	RAL 7012	B	1	**96-902.8**	0.001 kg
Plastic white		B	1	**98-902.9**	0.001 kg
Lens standard single rectangular, 12.4 x 17.4 mm					
Plastic black	RAL 9011	B	2	**96-903.0**	0.001 kg
Plastic red	RAL 3016	B	2	**96-903.2**	0.001 kg
Plastic green	RAL 6005	B	2	**96-903.5**	0.001 kg
Plastic grey	RAL 7012	B	2	**96-903.8**	0.001 kg
Plastic white		B	2	**98-903.9**	0.001 kg

Switching action: B = Momentary, C = Maintained

Lens	Colour	Switching action	Recess for LED	Part No.	Weight
Lens standard single rectangular, 12.4 x 17.4 mm					
Plastic black	RAL 9011	C		**96-905.0**	0.001 kg
Plastic red	RAL 3016	C		**96-905.2**	0.001 kg
Plastic green	RAL 6005	C		**96-905.5**	0.001 kg
Plastic grey	RAL 7012	C		**96-905.8**	0.001 kg
Plastic white		C		**98-905.9**	0.001 kg
Lens standard single rectangular, 12.4 x 17.4 mm					
Plastic black	RAL 9011	C	1	**96-906.0**	0.001 kg
Plastic red	RAL 3016	C	1	**96-906.2**	0.001 kg
Plastic green	RAL 6005	C	1	**96-906.5**	0.001 kg
Plastic grey	RAL 7012	C	1	**96-906.8**	0.001 kg
Plastic white		C	1	**98-906.9**	0.001 kg
Lens standard single rectangular, 12.4 x 17.4 mm					
Plastic black	RAL 9011	C	2	**96-907.0**	0.001 kg
Plastic red	RAL 3016	C	2	**96-907.2**	0.001 kg
Plastic green	RAL 6005	C	2	**96-907.5**	0.001 kg
Plastic grey	RAL 7012	C	2	**96-907.8**	0.001 kg
Plastic white		C	2	**98-907.9**	0.001 kg

Lens standard single for film insert

Lens	Colour	Switching action	Recess for LED	Part No.	Weight
Lens standard single for film insert square, 17.4 x 17.4 mm					
Plastic black	RAL 9011	B		**96-941.0**	0.001 kg
Plastic red	RAL 3016	B		**96-941.2**	0.001 kg
Plastic green	RAL 6005	B		**96-941.5**	0.001 kg
Plastic grey	RAL 7012	B		**96-941.8**	0.001 kg
Plastic white		B		**98-941.9**	0.001 kg
Lens standard single for film insert square, 17.4 x 17.4 mm					
Plastic black	RAL 9011	B	1	**96-942.0**	0.001 kg
Plastic red	RAL 3016	B	1	**96-942.2**	0.001 kg
Plastic green	RAL 6005	B	1	**96-942.5**	0.001 kg
Plastic grey	RAL 7012	B	1	**96-942.8**	0.001 kg
Plastic white		B	1	**98-942.9**	0.001 kg

Switching action: B = Momentary, C = Maintained

Lens	Colour	Switching action	Recess for LED	Part No.	Weight
Lens standard single for film insert square, 17.4 x 17.4 mm					
Plastic black	RAL 9011	B	2	**96-943.0**	0.001 kg
Plastic red	RAL 3016	B	2	**96-943.2**	0.001 kg
Plastic green	RAL 6005	B	2	**96-943.5**	0.001 kg
Plastic grey	RAL 7012	B	2	**98-943.8**	0.001 kg
Plastic white		B	2	**98-943.9**	0.001 kg
Lens standard single for film insert square, 17.4 x 17.4 mm					
Plastic black	RAL 9011	C		**96-945.0**	0.001 kg
Plastic red	RAL 3016	C		**96-945.2**	0.001 kg
Plastic green	RAL 6005	C		**96-945.5**	0.001 kg
Plastic grey	RAL 7012	C		**96-945.8**	0.001 kg
Plastic white		C		**98-945.9**	0.001 kg
Lens standard single for film insert square, 17.4 x 17.4 mm					
Plastic black	RAL 9011	C	1	**96-946.0**	0.001 kg
Plastic red	RAL 3016	C	1	**96-946.2**	0.001 kg
Plastic green	RAL 6005	C	1	**96-946.5**	0.001 kg
Plastic grey	RAL 7012	C	1	**96-946.8**	0.001 kg
Plastic white		C	1	**98-946.9**	0.001 kg
Lens standard single for film insert square, 17.4 x 17.4 mm					
Plastic black	RAL 9011	C	2	**96-947.0**	0.001 kg
Plastic red	RAL 3016	C	2	**96-947.2**	0.001 kg
Plastic green	RAL 6005	C	2	**96-947.5**	0.001 kg
Plastic grey	RAL 7012	C	2	**96-947.8**	0.001 kg
Plastic white		C	2	**98-947.9**	0.001 kg

Switching action: B = Momentary, C = Maintained

Illumination

Single-LED standard

Additional Information

- Without serie resistor, with special pin crank

LED colour	Operating voltage	Operation current	Part No.	Weight
Single-LED standard				
Single-LED red	2.2 VDC	20 mA	**10-2602.3172E**	0.001 kg
Single-LED yellow	2.2 VDC	20 mA	**10-2602.3174E**	0.001 kg
Single-LED green	2.2 VDC	20 mA	**10-2602.3175E**	0.001 kg

Mounting

Lens remover

Part No.	Weight
Lens remover	
98-968	0.004 kg

Drawings

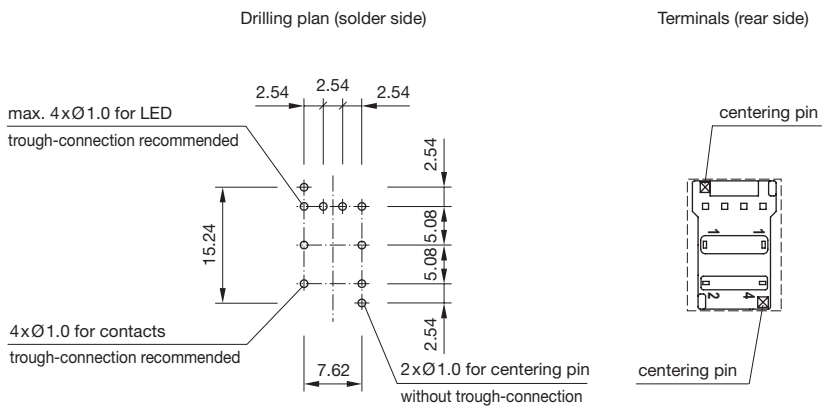

Component layout 1

96 Technical data

Snap-action switching element

Switching system

Single-break, self-cleaning, snap-action switching element with tactile feel of operation.

Material

Lens Euro-Style
ABS/PC or ABS, self-extinguishing

Housing
Polyester, self-extinguishing

Material of contact
Gold-plated on nickel

Mechanical characteristics

Terminals
PCB terminal

Actuating force
Actuating force 1.4 N ±0.3 N

Actuating travel
Lead distance 1.0 mm ±0.3 mm
Total distance 1.7 mm ±0.5 mm

Mechanical lifetime
≥5 million operations, as per IEC 60512-5-9a

Rebound time
≤2.5 ms

Electrical characteristics

Contact resistance
Starting value (initial) ≤100 mΩ, as per IEC 60512-2-2b

Isolation resistance
≥1012 Ω between contacts at 100 VDC, as per IEC 60512-2-3a

Capacity
Between contacts ≤1 pF

Electrical life
≥5 x 100.000 operations at 30 VDC, 100 mA, as per IEC 60512-5, test 9c

Conventional free air thermal current I_{th2}
100 mA

Switch rating
Electric strength
500 VAC, 50 Hz, 1 min. between all terminals and earth, as per IEC 60512-2-11

EAO reserves the right to alter specifications without further notice.

Environmental conditions

Storage temperature
-40 °C ... +85 °C

Service temperature
-25 °C ... +85 °C

Front protection
IP 67, as per IEC 60529

Shock resistance
(single impacts, semi-sinusoidal)
≥30 g for 11 ms as per IEC 60512-4-3

Vibration resistance
(sinusoidal)
10 g at 10 Hz ... 2000 Hz, amplitude 0.75 mm, as per IEC 60512-4-4

General notes

1. Engraving
In addition to the most commonly used world languages, in DIN1451-3 close spacing, other typefaces are available as Scandinavian, Slavic, Greek, Russian and Polish. Red, blue and black lenses are filled with white colour. Other colour lenses are filled in black. Standard height of letters is 2 mm. If the height is not specified, we will supply 2 mm engraved letters.

2. Hot stamping
On request. We will pleased to advise you.

3. Film inserts
A speciallens, 17.4 x 17.4 mm, available for insertion of a colour foil or film. The film thickness is 0.2 mm.

Lenses standard

All dimensions in mm

			Labeling field A			Labeling field B			
Front size	Film insert max. size	Height of letters h	Number of lines	Number of capital letters per line (target value)	Number of small letters per line (target value)	Number of lines	Number of capital letters per line (target value)	Number of small letters per line (target value)	Image
12.4 x 17.4		2	1	6	6–7	2	5	6–7	B1
		3	1	4	5	2	4	4–5	B1
		4	1	3–4	4	1	3–4	4	B1
		5				1	2–3	3	B1
		6				1	2	2	B1
		8				1	1	1	B1
14.8 x 17.4		2	1	7	7–8	2	6	7–8	B2
		3	1	5–6	6–7	2	5	6	B2
		4	1	4	4–5	1	4	4	B2
		5				1	3	3–4	B2
		6				1	2–3	3	B2
		8				1	1–3	2	B2
17.4 x 17.4	7 x 12	2	1	8–9	9–10	2	7–8	8–9	B3
		2	1	8–9	9–10				B4
		3	1	7–8	8–9	2	6–7	7–8	B3
		3	1	7–8	8–9				B4
		4	1	5	5–6	1	4–5	5–6	B3
		4	1	5	5–6				B4
		5				1	3–4	4	B3
									B4
		6				1	2–3	3	B3
									B4
		8				1	2	2–3	B3
									B4

B1

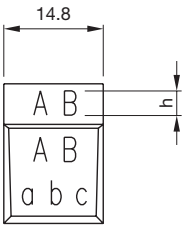

B2

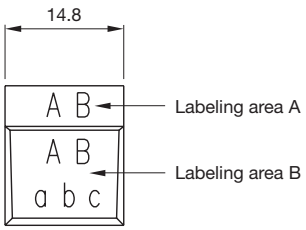

B3

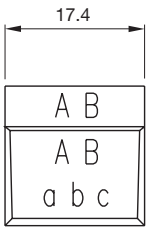

B4

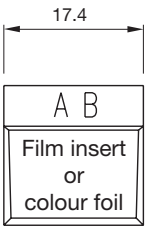

Suppressor circuits

When switching inductive loads such as relays, DC motors, and DC solenoids, it is always important to absorb surges (e. g. with a diode) to protect the contacts. When these inductive loads are switched off, a counter emf can severely damage switch contacts and greatly shorten lifetime.

Fig. 1 shows an inductive load with a free-wheeling diode connected in parallel. This free-wheeling diode provides a path for the inductor current to flow when the current is interrupted by the switch. Without this free-wheeling diode, the voltage across the coil will be limited only by dielectric breakdown voltages of the circuit or parasitic elements of the coil. This voltage can be kilovolts in amplitude even when nominal circuit voltages are low (e. g. 12 VDC) see Fig. 2.

The free-wheeling diode should be chosen so that the reverse breakdown voltage is greater than the voltage driving the inductive load. The DC blocking voltage (VR) of the free-wheeling diode can be found in the datasheet of a diode. The forward current should be equal or greater than the maximum current flowing through the load.

To get an efficient protection, the free-wheeling diode must be connected as close as possible to the inductive load!

Switching with inductive load
Fig. 1

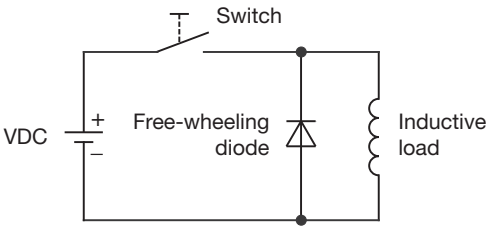

Counter EMF
over load without free-wheeling diode
Fig. 2

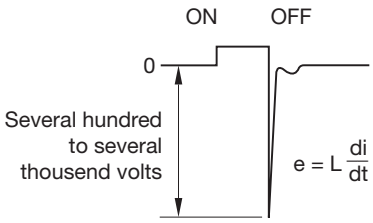

Index from Part No.

Part No.	Page
10-2602.3172E	11
10-2602.3174E	11
10-2602.3175E	11
96-323.837	4
96-901.0	8
96-901.2	8
96-901.5	8
96-901.8	8
96-902.0	8
96-902.2	8
96-902.5	8
96-902.8	8
96-903.0	8
96-903.2	8
96-903.5	8
96-903.8	8
96-905.0	9
96-905.2	9
96-905.5	9
96-905.8	9
96-906.0	9
96-906.2	9
96-906.5	9
96-906.8	9
96-907.0	9
96-907.2	9
96-907.5	9
96-907.8	9
96-921.0	7
96-921.2	7
96-921.5	7
96-921.8	7
96-922.0	7
96-922.2	7
96-922.5	7
96-922.8	7
96-923.0	7
96-923.2	7
96-923.5	7
96-923.8	7
96-925.0	7
96-925.2	7
96-925.5	7
96-925.8	7
96-926.0	8
96-926.2	8
96-926.5	8
96-926.8	8
96-927.0	8
96-927.2	8
96-927.5	8
96-927.8	8
96-931.0	6
96-931.2	6
96-931.5	6
96-931.8	6
96-932.0	6
96-932.2	6
96-932.5	6
96-932.8	6
96-933.0	6
96-933.2	6
96-933.8	6
96-935.0	6
96-935.2	6
96-935.5	6
96-935.8	6
96-936.0	6
96-936.2	6
96-936.5	6
96-936.8	6
96-937.0	7
96-937.2	7
96-937.5	7
96-937.8	7
96-941.0	9
96-941.2	9
96-941.5	9
96-941.8	9
96-942.0	9
96-942.2	9
96-942.5	9
96-942.8	9
96-943.0	10
96-943.2	10
96-943.5	10
96-945.0	10
96-945.2	10
96-945.5	10
96-945.8	10
96-946.0	10
96-946.2	10
96-946.5	10
96-946.8	10
96-947.0	10
96-947.2	10
96-947.5	10
96-947.8	10
98-901.9	8
98-902.9	8
98-903.9	8
98-905.9	9
98-906.9	9
98-907.9	9
98-921.9	7
98-922.9	7
98-923.9	7
98-925.9	7
98-926.9	8
98-927.9	8
98-931.9	6
98-932.9	6
98-933.5	6
98-933.9	6
98-935.9	6
98-936.9	6
98-937.9	7
98-941.9	9
98-942.9	9
98-943.8	10
98-943.9	10
98-945.9	10
98-946.9	10
98-947.9	10
98-968	12

Мы молодая и активно развивающаяся компания в области поставок электронных компонентов. Мы поставляем электронные компоненты отечественного и импортного производства напрямую от производителей и с крупнейших складов мира.

Благодаря сотрудничеству с мировыми поставщиками мы осуществляем комплексные и плановые поставки широчайшего спектра электронных компонентов.

Собственная эффективная логистика и склад в обеспечивает надежную поставку продукции в точно указанные сроки по всей России.

Мы осуществляем техническую поддержку нашим клиентам и предпродажную проверку качества продукции. На все поставляемые продукты мы предоставляем гарантию .

Осуществляем поставки продукции под контролем ВП МО РФ на предприятия военно-промышленного комплекса России , а также работаем в рамках 275 ФЗ с открытием отдельных счетов в уполномоченном банке. Система менеджмента качества компании соответствует требованиям ГОСТ ISO 9001.

Минимальные сроки поставки, гибкие цены, неограниченный ассортимент и индивидуальный подход к клиентам являются основой для выстраивания долгосрочного и эффективного сотрудничества с предприятиями радиоэлектронной промышленности, предприятиями ВПК и научно-исследовательскими институтами России.

С нами вы становитесь еще успешнее!

Наши контакты:

Телефон: +7 812 627 14 35

Электронная почта: sales@st-electron.ru

Адрес: 198099, Санкт-Петербург, Промышленная ул, дом № 19, литера Н, помещение 100-Н Офис 331