3M™ Round, Shielded/Jacketed, Disc. Wire Cable

28 AWG Stranded, Twisted Pair, PVC/PVC — 3600X Series

- Meets external wiring requirements of National Electrical Code, Article 725 (CL2)
- 28 AWG stranded wire provides flexibility
- Twisted pairs reduce crosstalk for balanced drive applications
- Dual shielding with aluminum film foil and copper braid provides excellent EMI/ESD protection
- Wires are color coded for easy identification
- 35 db average shielding effectiveness
- RoHS Compliant. See the Regulatory Information Appendix (RIA) in the "RoHS compliance" section of www.3Mconnectors.com for compliance information (RIA E1 & C1 apply)

Date Modified: June 1, 2012

Physical

Jacket Material: Polyvinyl Chloride (PVC); **Color:** Beige

Primary Material: PVC

Marking:

Standard: (UL) CL2 75C 28 AWG 3M XX
C UL AWM IIA/B 80C 150V FT1 EU <50V
(where XX may be NU, MR or NW)

Conductors: 28 AWG, 7 × 36 AWG [7 × Ø 0.127] Tinned Stranded Copper

Shielding: 0.001 [0.03] Thick Aluminum/Polyester Film Foil and 90% Coverage Tinned Copper Braid

Electrical

Voltage Rating: USA: N.E.C. 725, CL2 Canada: 150V EU: <50V

Insulation Resistance: (Primary Cable) > 1×10^{10} Ω/10 ft. [3 m]

	Unbalanced	Balanced
Characteristic Impedance:	58 Ω	91 Ω
Capacitance:	29.2 pF/ft [95.8 pF/m]	18.5 pF/ft [60.7 pF/m]
Inductance:	0.10 µH/ft [0.33 µH/m]	0.15 µH/ft [0.49 µH/m]
Propagation Delay:	1.69 ns/ft [5.54 ns/m]	1.69 ns/ft [5.54 ns/m]
Velocity of Propagation:	60%	60%

Note: Unbalanced is measured between conductors within a pair with one conductor connected to the shield. Balanced is measured between conductors within a pair with the shield floating.

Environmental

Temperature Rating: USA: CL2; 75°C Max Canada: +80°C

Flammability Rating: USA: N.E.C. 725, CL2 Canada: FT1

UL File No.: E118773, Power Limited Circuit Cable; CL2

3M is a trademark of 3M Company.

For technical, sales or ordering information call
800-225-5373

3M™ Round, Shielded/Jacketed, Disc. Wire Cable

28 AWG Stranded, Twisted Pair, PVC/PVC — 3600X Series

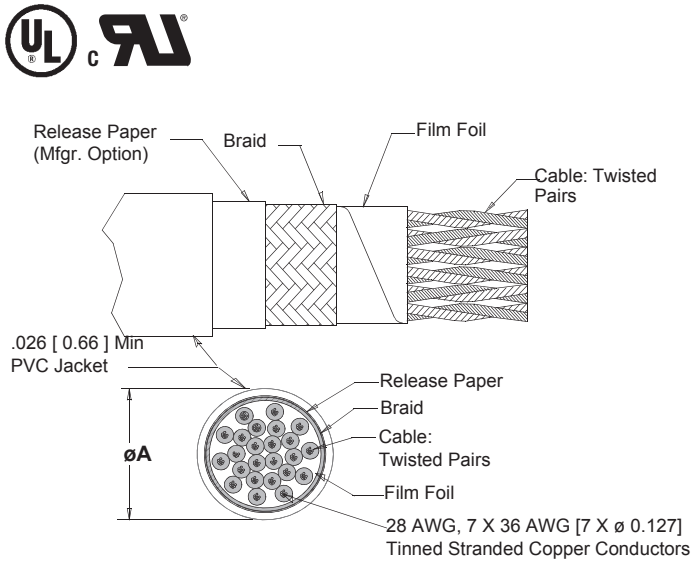

Number of Conductors	3M Part Number	Dimension A +/- 0.02 [0.5]
14 (7 pair)	3600X/14	.22 [5.6]
20 (10 pair)	3600X/20	.24 [6.1]
24 (12 pair)	3600X/24	.25 [6.4]
26 (13 pair)	3600X/26	.25 [6.4]
36 (18 pair)	3600X/36	.29 [7.4]
40 (20 pair)	3600X/40	.30 [7.6]
50 (25 pair)	3600X/50	.32 [8.1]
68 (34 pair)	3600X/68	.36 [9.1]
80 (40 pair)	3600X/80	.39 [9.9]
100 (50 pair)	3600X/100	.44 [11.2]

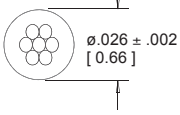

Discrete Wire Detail

Inch
[mm]

Tolerance Unless Noted			
	.0	.00	.000
Inch	±.1	±.05	±.010

[ ] Dimensions for Reference Only

Pair Identification

Pair	Cond	1st Conductor Solid	1st Conductor Band	Cond	2nd Conductor Solid	2nd Conductor Band	Pair	Cond	1st Conductor Solid	1st Conductor Band	Cond	2nd Conductor Solid	2nd Conductor Band
1	1	Black	Red	2	Red	Black	26	51	Brown	Yellow	52	Yellow	Brown
2	3	Black	White	4	White	Black	27	53	Brown	Orange	54	Orange	Brown
3	5	Black	Green	6	Green	Black	28	55	Orange	Yellow	56	Yellow	Orange
4	7	Black	Blue	8	Blue	Black	29	57	Violet	Orange	58	Orange	Violet
5	9	Black	Yellow	10	Yellow	Black	30	59	Violet	Red	60	Red	Violet
6	11	Black	Brown	12	Brown	Black	31	61	Violet	White	62	White	Violet
7	13	Black	Orange	14	Orange	Black	32	63	Violet	Green	64	Green	Violet
8	15	Red	White	16	White	Red	33	65	Violet	Blue	66	Blue	Violet
9	17	Red	Green	18	Green	Red	34	67	Violet	Yellow	68	Yellow	Violet
10	19	Red	Blue	20	Blue	Red	35	69	Violet	Brown	70	Brown	Violet
11	21	Red	Yellow	22	Yellow	Red	36	71	Violet	Black	72	Black	Violet
12	23	Red	Brown	24	Brown	Red	37	73	Gray	White	74	White	Gray
13	25	Red	Orange	26	Orange	Red	38	75	Gray	Brown	76	Brown	Gray
14	27	Green	White	28	White	Green	39	77	Gray	Red	78	Red	Gray
15	29	Green	Blue	30	Blue	Green	40	79	Gray	Orange	80	Orange	Gray
16	31	Green	Yellow	32	Yellow	Green	41	81	Gray	Yellow	82	Yellow	Gray
17	33	Green	Brown	34	Brown	Green	42	83	Gray	Green	84	Green	Gray
18	35	Green	Orange	36	Orange	Green	43	85	Gray	Blue	86	Blue	Gray
19	37	White	Blue	38	Blue	White	44	87	Tan	Orange	88	Orange	Tan
20	39	White	Yellow	40	Yellow	White	45	89	Tan	Green	90	Green	Tan
21	41	White	Brown	42	Brown	White	46	91	Tan	Black	92	Black	Tan
22	43	White	Orange	44	Orange	White	47	93	Tan	Blue	94	Blue	Tan
23	45	Blue	Yellow	46	Yellow	Blue	48	95	Tan	White	96	White	Tan
24	47	Blue	Brown	48	Brown	Blue	49	97	Tan	Yellow	98	Yellow	Tan
25	49	Blue	Orange	50	Orange	Blue	50	99	Tan	Brown	100	Brown	Tan

Ordering Information

3600X / XX XX

Jacket Color Options:
A = Black Jacket (Special)
B = Beige Jacket (Standard)
G = Gray Jacket (Special)

Number of Conductors
(See Table)

Blank = Standard
SF = Splice Free

Note: Available in standard 100 ft, 200 ft and 300 ft rolls, please specify when ordering. Contact 3M for availability of additional conductor counts and/or custom roll lengths.

TS-0388-C
Sheet 2 of 2

3M is a trademark of 3M Company.

For technical, sales or ordering information call
800-225-5373

Important Notice

All statements, technical information, and recommendations related to 3M's products are based on information believed to be reliable, but the accuracy or completeness is not guaranteed. Before using this product, you must evaluate it and determine if it is suitable for your intended application. You assume all risks and liability associated with such use. Any statements related to the product which are not contained in 3M's current publications, or any contrary statements contained on your purchase order shall have no force or effect unless expressly agreed upon, in writing, by an authorized officer of 3M.

Warranty; Limited Remedy; Limited Liability.

This product will be free from defects in material and manufacture for a period of one (1) year from the time of purchase. **3M MAKES NO OTHER WARRANTIES INCLUDING, BUT NOT LIMITED TO, ANY IMPLIED WARRANTY OF MERCHANTABILITY OR FITNESS FOR A PARTICULAR PURPOSE.** If this product is defective within the warranty period stated above, your exclusive remedy shall be, at 3M's option, to replace or repair the 3M product or refund the purchase price of the 3M product. **Except where prohibited by law, 3M will not be liable for any indirect, special, incidental or consequential loss or damage arising from this 3M product, regardless of the legal theory asserted.**

3M Electronics Solutions Division
6801 River Place Blvd.
Austin, TX 78726-9000
U.S.A.
1-800-225-5373
www.3Mconnectors.com

3M is a trademark of 3M Company.

Please recycle. Printed in USA.
© 3M 2012. All rights reserved.
RIA-2217B-E

Мы молодая и активно развивающаяся компания в области поставок электронных компонентов. Мы поставляем электронные компоненты отечественного и импортного производства напрямую от производителей и с крупнейших складов мира.

Благодаря сотрудничеству с мировыми поставщиками мы осуществляем комплексные и плановые поставки широчайшего спектра электронных компонентов.

Собственная эффективная логистика и склад в обеспечивает надежную поставку продукции в точно указанные сроки по всей России.

Мы осуществляем техническую поддержку нашим клиентам и предпродажную проверку качества продукции. На все поставляемые продукты мы предоставляем гарантию .

Осуществляем поставки продукции под контролем ВП МО РФ на предприятия военно-промышленного комплекса России , а также работаем в рамках 275 ФЗ с открытием отдельных счетов в уполномоченном банке. Система менеджмента качества компании соответствует требованиям ГОСТ ISO 9001.

Минимальные сроки поставки, гибкие цены, неограниченный ассортимент и индивидуальный подход к клиентам являются основой для выстраивания долгосрочного и эффективного сотрудничества с предприятиями радиоэлектронной промышленности, предприятиями ВПК и научно-исследовательскими институтами России.

С нами вы становитесь еще успешнее!

Наши контакты:

Телефон: +7 812 627 14 35

Электронная почта: sales@st-electron.ru

Адрес: 198099, Санкт-Петербург, Промышленная ул, дом № 19, литера Н, помещение 100-Н Офис 331