74HC245

Octal 3-State Noninverting Bus Transceiver

High−Performance Silicon−Gate CMOS

ON Semiconductor®

http://onsemi.com

The 74HC245 is identical in pinout to the LS245. The device inputs are compatible with standard CMOS outputs; with pull−up resistors, they are compatible with LSTTL outputs.

The HC245 is a 3−state noninverting transceiver that is used for 2−way asynchronous communication between data buses. The device has an active−low Output Enable pin, which is used to place the I/O ports into high−impedance states. The Direction control determines whether data flows from A to B or from B to A.

Features

- Output Drive Capability: 15 LSTTL Loads
- Outputs Directly Interface to CMOS, NMOS, and TTL
- Operating Voltage Range: 2.0 to 6.0 V
- Low Input Current: 1.0 μA
- High Noise Immunity Characteristic of CMOS Devices
- In Compliance with the Requirements Defined by JEDEC Standard No. 7A
- ESD Performance: HBM > 2000 V; Machine Model > 200 V
- Chip Complexity: 308 FETs or 77 Equivalent Gates
- This is a Pb−Free Device

MARKING DIAGRAMS

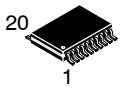

TSSOP−20
DT SUFFIX
CASE 948E

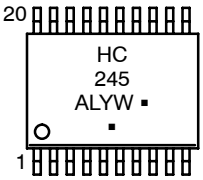

HC245	= Device Code
A	= Assembly Location
L	= Wafer Lot
Y	= Year
W	= Work Week
▪	= Pb−Free Package

(Note: Microdot may be in either location)

ORDERING INFORMATION

See detailed ordering and shipping information in the package dimensions section on page 2 of this data sheet.

© Semiconductor Components Industries, LLC, 2007

March, 2007 − Rev. 1

Publication Order Number:
74HC245/D

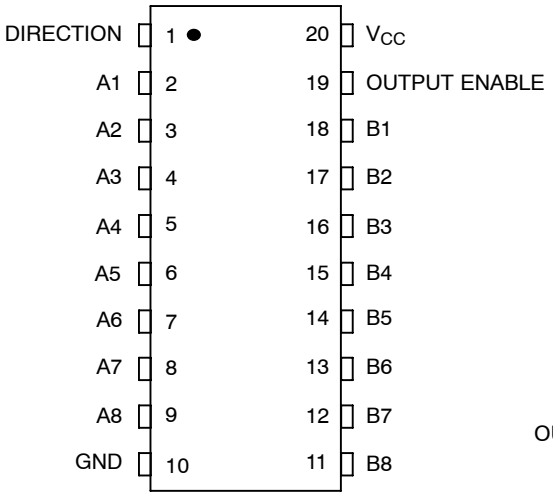

Figure 1. Pin Assignment

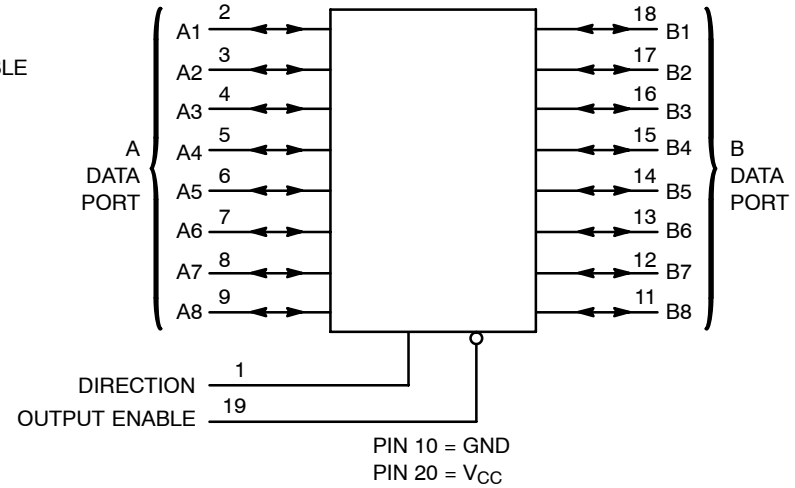

Figure 2. Logic Diagram

FUNCTION TABLE

Control Inputs		Operation
Output Enable	**Direction**	
L	L	Data Transmitted from Bus B to Bus A
L	H	Data Transmitted from Bus A to Bus B
H	X	Buses Isolated (High−Impedance State)

X = don't care

ORDERING INFORMATION

Device	Package	Shipping†
74HC245DTR2G	TSSOP−20*	2500 / Tape & Reel

†For information on tape and reel specifications, including part orientation and tape sizes, please refer to our Tape and Reel Packaging Specifications Brochure, BRD8011/D.
*This package is inherently Pb−Free.

MAXIMUM RATINGS (Note 1)

Symbol	Parameter		Value	Unit
V_{CC}	DC Supply Voltage		−0.5 to +7.0	V
V_{IN}	DC Input Voltage		−0.5 to V_{CC} +0.5	V
V_{OUT}	DC Output Voltage	(Note 2)	−0.5 to V_{CC} +0.5	V
I_{IK}	DC Input Diode Current		±20	mA
I_{OK}	DC Output Diode Current		±35	mA
I_{OUT}	DC Output Sink Current		±35	mA
I_{CC}	DC Supply Current per Supply Pin		±75	mA
I_{GND}	DC Ground Current per Ground Pin		±75	mA
T_{STG}	Storage Temperature Range		−65 to +150	°C
T_L	Lead Temperature, 1 mm from Case for 10 Seconds		260	°C
T_J	Junction Temperature Under Bias		+150	°C
θ_{JA}	Thermal Resistance	TSSOP	128	°C/W
P_D	Power Dissipation in Still Air at 85°C	TSSOP	450	mW
MSL	Moisture Sensitivity		Level 1	
F_R	Flammability Rating	Oxygen Index: 30% to 35%	UL 94 V−0 @ 0.125 in	
V_{ESD}	ESD Withstand Voltage	Human Body Model (Note 3) Machine Model (Note 4)	>2000 >200	V
$I_{LATCHUP}$	Latchup Performance	Above V_{CC} and Below GND at 85°C (Note 5)	±300	mA

Stresses exceeding Maximum Ratings may damage the device. Maximum Ratings are stress ratings only. Functional operation above the Recommended Operating Conditions is not implied. Extended exposure to stresses above the Recommended Operating Conditions may affect device reliability.

1. Measured with minimum pad spacing on an FR4 board, using 10 mm−by−1 inch, 20 ounce copper trace with no air flow.
2. I_O absolute maximum rating must observed.
3. Tested to EIA/JESD22−A114−A.
4. Tested to EIA/JESD22−A115−A.
5. Tested to EIA/JESD78.

RECOMMENDED OPERATING CONDITIONS

Symbol	Parameter		Min	Max	Unit
V_{CC}	DC Supply Voltage (Referenced to GND)		2.0	6.0	V
V_{in}, V_{out}	DC Input Voltage, Output Voltage (Referenced to GND)		0	V_{CC}	V
T_A	Operating Temperature, All Package Types		–55	+125	°C
t_r, t_f	Input Rise and Fall Time (Figure 3)	V_{CC} = 2.0 V V_{CC} = 4.5 V V_{CC} = 6.0 V	0 0 0	1000 500 400	ns

DC ELECTRICAL CHARACTERISTICS (Voltages Referenced to GND)

Symbol	Parameter	Test Conditions	V_{CC} V	Guaranteed Limit –55 to 25°C	≤ 85°C	≤ 125°C	Unit
V_{IH}	Minimum High–Level Input Voltage	$V_{out} = V_{CC} - 0.1$ V $\|I_{out}\| \leq 20$ μA	2.0 3.0 4.5 6.0	1.5 2.1 3.15 4.2	1.5 2.1 3.15 4.2	1.5 2.1 3.15 4.2	V
V_{IL}	Maximum Low–Level Input Voltage	$V_{out} = 0.1$ V $\|I_{out}\| \leq 20$ μA	2.0 3.0 4.5 6.0	0.5 0.9 1.35 1.8	0.5 0.9 1.35 1.8	0.5 0.9 1.35 1.8	V
V_{OH}	Minimum High–Level Output Voltage	$V_{in} = V_{IH}$ $\|I_{out}\| \leq 20$ μA	2.0 4.5 6.0	1.9 4.4 5.9	1.9 4.4 5.9	1.9 4.4 5.9	V
		$V_{in} = V_{IH}$ $\|I_{out}\| \leq 2.4$ mA $\|I_{out}\| \leq 6.0$ mA $\|I_{out}\| \leq 7.8$ mA	3.0 4.5 6.0	2.48 3.98 5.48	2.34 3.84 5.34	2.2 3.7 5.2	
V_{OL}	Maximum Low–Level Output Voltage	$V_{in} = V_{IL}$ $\|I_{out}\| \leq 20$ μA	2.0 4.5 6.0	0.1 0.1 0.1	0.1 0.1 0.1	0.1 0.1 0.1	V
		$V_{in} = V_{IL}$ $\|I_{out}\| \leq 2.4$ mA $\|I_{out}\| \leq 6.0$ mA $\|I_{out}\| \leq 7.8$ mA	3.0 4.5 6.0	0.26 0.26 0.26	0.33 0.33 0.33	0.4 0.4 0.4	
I_{in}	Maximum Input Leakage Current	$V_{in} = V_{CC}$ or GND	6.0	±0.1	±1.0	±1.0	μA
I_{OZ}	Maximum Three–State Leakage Current	Output in High–Impedance State $V_{in} = V_{IL}$ or V_{IH} $V_{out} = V_{CC}$ or GND	6.0	±0.5	±5.0	±10	μA
I_{CC}	Maximum Quiescent Supply Current (per Package)	$V_{in} = V_{CC}$ or GND $I_{out} = 0$ μA	6.0	4.0	40	40	μA

6. Information on typical parametric values and high frequency or heavy load considerations can be found in the ON Semiconductor High–Speed CMOS Data Book (DL129/D).

AC ELECTRICAL CHARACTERISTICS (C_L = 50 pF, Input $t_r = t_f$ = 6 ns)

Symbol	Parameter	V_{CC} V	Guaranteed Limit –55 to 25°C	≤ 85°C	≤ 125°C	Unit
t_{PLH}, t_{PHL}	Maximum Propagation Delay, A to B, B to A (Figures 1 and 3)	2.0 3.0 4.5 6.0	75 55 15 13	95 70 19 16	110 80 22 19	ns
t_{PLZ}, t_{PHZ}	Maximum Propagation Delay, Direction or Output Enable to A or B (Figures 2 and 4)	2.0 3.0 4.5 6.0	110 90 22 19	140 110 28 24	165 130 33 28	ns
t_{PZL}, t_{PZH}	Maximum Propagation Delay, Output Enable to A or B (Figures 2 and 4)	2.0 3.0 4.5 6.0	110 90 22 19	140 110 28 24	165 130 33 28	ns
t_{TLH}, t_{THL}	Maximum Output Transition Time, Any Output (Figures 1 and 3)	2.0 3.0 4.5 6.0	60 23 12 10	75 27 15 13	90 32 18 15	ns
C_{in}	Maximum Input Capacitance (Pin 1 or Pin 19)	–	10	10	10	pF
C_{out}	Maximum Three–State I/O Capacitance (I/O in High–Impedance State)	–	15	15	15	pF

7. For propagation delays with loads other than 50 pF, and information on typical parametric values, see the ON Semiconductor High–Speed CMOS Data Book (DL129/D).

		Typical @ 25°C, V_{CC} = 5.0 V	
C_{PD}	Power Dissipation Capacitance (Per Transceiver Channel) (Note 8)	40	pF

8. Used to determine the no–load dynamic power consumption: $P_D = C_{PD} V_{CC}^2 f + I_{CC} V_{CC}$. For load considerations, see the ON Semiconductor High–Speed CMOS Data Book (DL129/D).

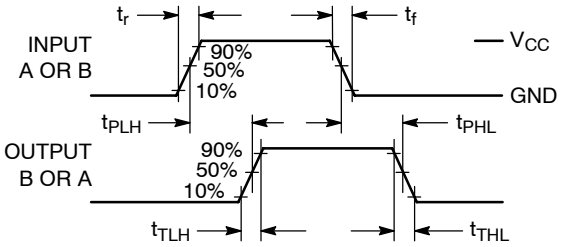

Figure 3. Switching Waveform

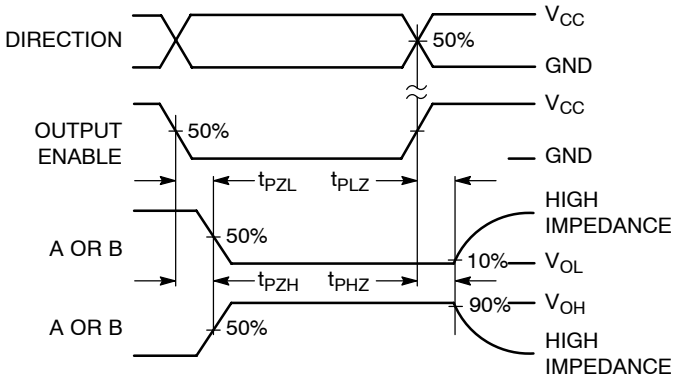

Figure 4. Switching Waveform

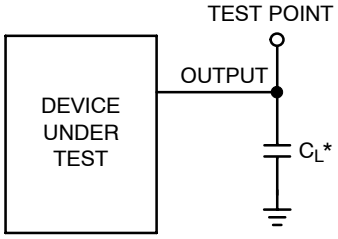

*Includes all probe and jig capacitance

Figure 5. Test Circuit

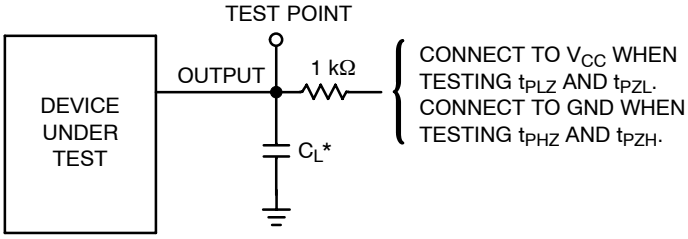

*Includes all probe and jig capacitance

Figure 6. Test Circuit

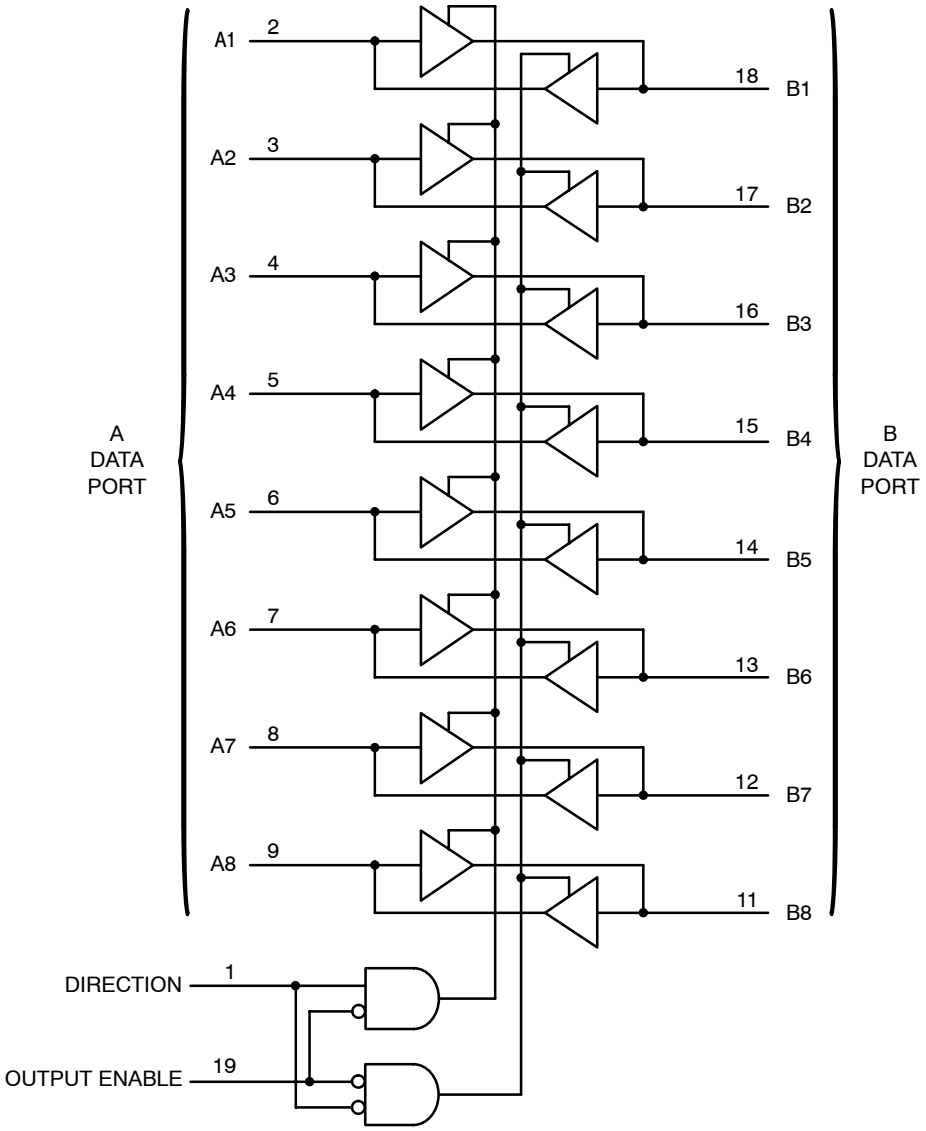

Figure 7. Expanded Logic Diagram

PACKAGE DIMENSIONS

TSSOP−20
CASE 948E−02
ISSUE C

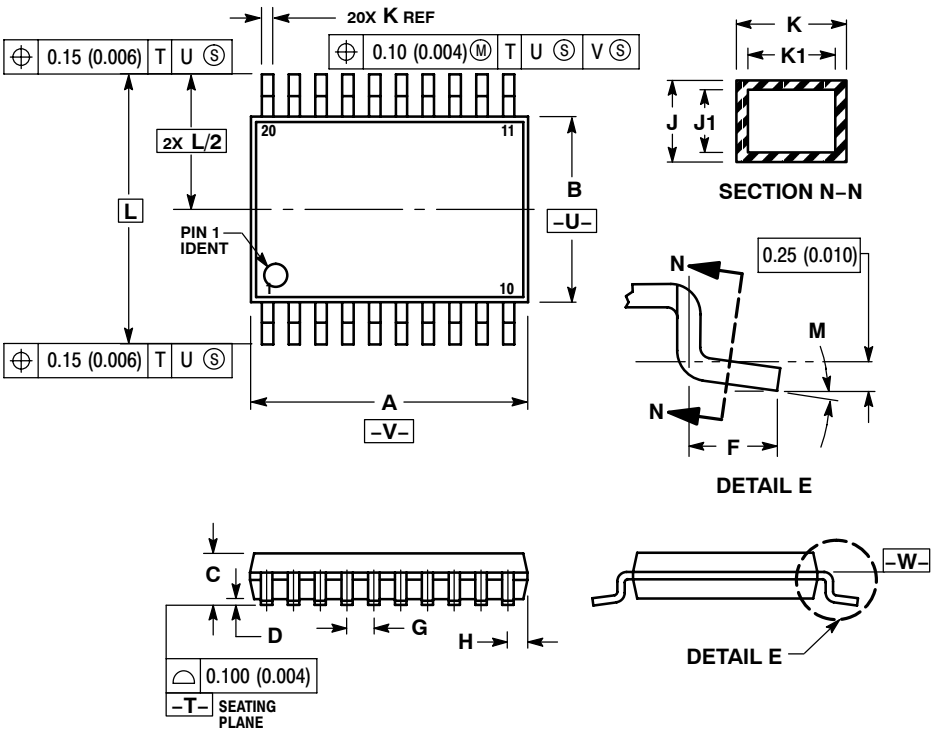

NOTES:
1. DIMENSIONING AND TOLERANCING PER ANSI Y14.5M, 1982.
2. CONTROLLING DIMENSION: MILLIMETER.
3. DIMENSION A DOES NOT INCLUDE MOLD FLASH, PROTRUSIONS OR GATE BURRS. MOLD FLASH OR GATE BURRS SHALL NOT EXCEED 0.15 (0.006) PER SIDE.
4. DIMENSION B DOES NOT INCLUDE INTERLEAD FLASH OR PROTRUSION. INTERLEAD FLASH OR PROTRUSION SHALL NOT EXCEED 0.25 (0.010) PER SIDE.
5. DIMENSION K DOES NOT INCLUDE DAMBAR PROTRUSION. ALLOWABLE DAMBAR PROTRUSION SHALL BE 0.08 (0.003) TOTAL IN EXCESS OF THE K DIMENSION AT MAXIMUM MATERIAL CONDITION.
6. TERMINAL NUMBERS ARE SHOWN FOR REFERENCE ONLY.
7. DIMENSION A AND B ARE TO BE DETERMINED AT DATUM PLANE −W−.

	MILLIMETERS		INCHES	
DIM	MIN	MAX	MIN	MAX
A	6.40	6.60	0.252	0.260
B	4.30	4.50	0.169	0.177
C	−−−	1.20	−−−	0.047
D	0.05	0.15	0.002	0.006
F	0.50	0.75	0.020	0.030
G	0.65 BSC		0.026 BSC	
H	0.27	0.37	0.011	0.015
J	0.09	0.20	0.004	0.008
J1	0.09	0.16	0.004	0.006
K	0.19	0.30	0.007	0.012
K1	0.19	0.25	0.007	0.010
L	6.40 BSC		0.252 BSC	
M	0°	8°	0°	8°

SOLDERING FOOTPRINT*

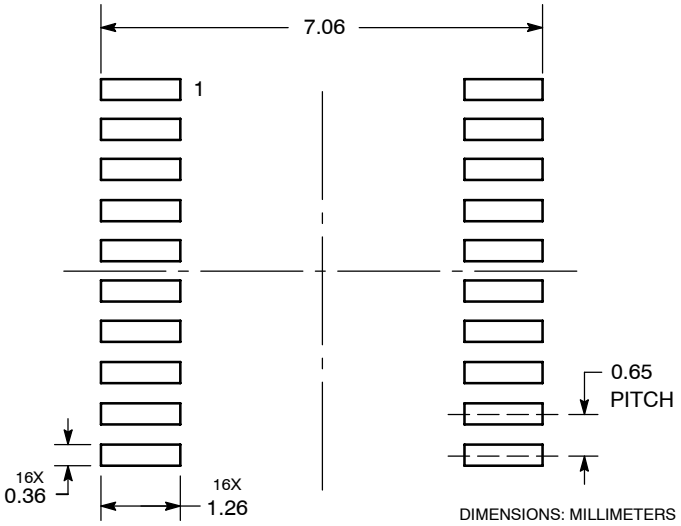

*For additional information on our Pb−Free strategy and soldering details, please download the ON Semiconductor Soldering and Mounting Techniques Reference Manual, SOLDERRM/D.

ON Semiconductor and are registered trademarks of Semiconductor Components Industries, LLC (SCILLC). SCILLC reserves the right to make changes without further notice to any products herein. SCILLC makes no warranty, representation or guarantee regarding the suitability of its products for any particular purpose, nor does SCILLC assume any liability arising out of the application or use of any product or circuit, and specifically disclaims any and all liability, including without limitation special, consequential or incidental damages. "Typical" parameters which may be provided in SCILLC data sheets and/or specifications can and do vary in different applications and actual performance may vary over time. All operating parameters, including "Typicals" must be validated for each customer application by customer's technical experts. SCILLC does not convey any license under its patent rights nor the rights of others. SCILLC products are not designed, intended, or authorized for use as components in systems intended for surgical implant into the body, or other applications intended to support or sustain life, or for any other application in which the failure of the SCILLC product could create a situation where personal injury or death may occur. Should Buyer purchase or use SCILLC products for any such unintended or unauthorized application, Buyer shall indemnify and hold SCILLC and its officers, employees, subsidiaries, affiliates, and distributors harmless against all claims, costs, damages, and expenses, and reasonable attorney fees arising out of, directly or indirectly, any claim of personal injury or death associated with such unintended or unauthorized use, even if such claim alleges that SCILLC was negligent regarding the design or manufacture of the part. SCILLC is an Equal Opportunity/Affirmative Action Employer. This literature is subject to all applicable copyright laws and is not for resale in any manner.

PUBLICATION ORDERING INFORMATION

LITERATURE FULFILLMENT:
Literature Distribution Center for ON Semiconductor
P.O. Box 5163, Denver, Colorado 80217 USA
Phone: 303−675−2175 or 800−344−3860 Toll Free USA/Canada
Fax: 303−675−2176 or 800−344−3867 Toll Free USA/Canada
Email: orderlit@onsemi.com

N. American Technical Support: 800−282−9855 Toll Free USA/Canada
Europe, Middle East and Africa Technical Support:
Phone: 421 33 790 2910
Japan Customer Focus Center
Phone: 81−3−5773−3850

ON Semiconductor Website: **www.onsemi.com**

Order Literature: http://www.onsemi.com/orderlit

For additional information, please contact your local Sales Representative

Мы молодая и активно развивающаяся компания в области поставок электронных компонентов. Мы поставляем электронные компоненты отечественного и импортного производства напрямую от производителей и с крупнейших складов мира.

Благодаря сотрудничеству с мировыми поставщиками мы осуществляем комплексные и плановые поставки широчайшего спектра электронных компонентов.

Собственная эффективная логистика и склад в обеспечивает надежную поставку продукции в точно указанные сроки по всей России.

Мы осуществляем техническую поддержку нашим клиентам и предпродажную проверку качества продукции. На все поставляемые продукты мы предоставляем гарантию .

Осуществляем поставки продукции под контролем ВП МО РФ на предприятия военно-промышленного комплекса России , а также работаем в рамках 275 ФЗ с открытием отдельных счетов в уполномоченном банке. Система менеджмента качества компании соответствует требованиям ГОСТ ISO 9001.

Минимальные сроки поставки, гибкие цены, неограниченный ассортимент и индивидуальный подход к клиентам являются основой для выстраивания долгосрочного и эффективного сотрудничества с предприятиями радиоэлектронной промышленности, предприятиями ВПК и научно-исследовательскими институтами России.

С нами вы становитесь еще успешнее!

Наши контакты:

Телефон: +7 812 627 14 35

Электронная почта: sales@st-electron.ru

Адрес: 198099, Санкт-Петербург, Промышленная ул, дом № 19, литера Н, помещение 100-Н Офис 331