International
IOR Rectifier

IRAMS10UP60B

iMOTION™ Series

10A, 600V

with Internal Shunt Resistor

Integrated Power Hybrid IC for
Appliance Motor Drive Applications.

Description

International Rectifier's IRAMS10UP60B is an Integrated Power Module developed and optimized for electronic motor control in appliance applications such as washing machines and refrigerators. Plug N Drive technology offers an extremely compact, high performance AC motor-driver in a single isolated package for a very simple design. An internal shunt is also included and offers easy current feedback and overcurrent monitor for precise and safe operation. A built-in temperature monitor and over-current protection, along with the short-circuit rated IGBTs and integrated under-voltage lockout function, deliver high level of protection and fail-safe operation. The integration of the bootstrap diodes for the high-side driver section, and the single polarity power supply required to drive the internal circuitry, simplify the utilization of the module and deliver further cost reduction advantages.

Features

- Internal Shunt Resistor
- Integrated Gate Drivers and Bootstrap Diodes
- Temperature Monitor
- Fully Isolated Package
- Low $V_{CE(on)}$ Non Punch Through IGBT Technology
- Undervoltage lockout for all channels
- Matched propagation delay for all channels
- Schmitt-triggered input logic
- Cross-conduction prevention logic
- Lower di/dt gate driver for better noise immunity
- Motor Power range 0.4~0.75kW / 85~253 Vac
- Isolation $2000V_{RMS}$ /1min and CTI > 600V
- Recognized by UL (E252584), RoHS Compliant

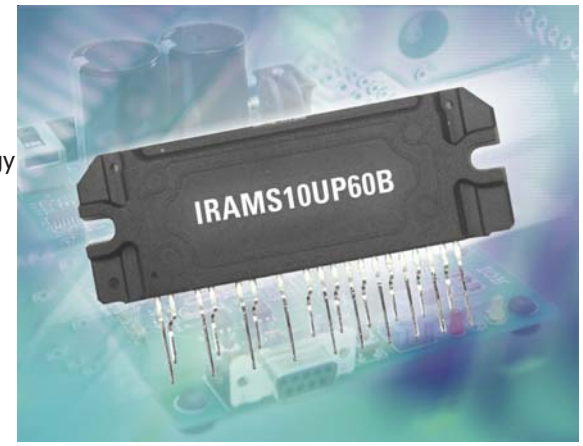

Absolute Maximum Ratings

Parameter	Description	Value	Units
V_{CES} / V_{RRM}	IGBT/Diode Blocking Voltage	600	V
V^+	Positive Bus Input Voltage	450	
I_O @ T_C=25°C	RMS Phase Current (Note 1)	10	A
I_O @ T_C=100°C	RMS Phase Current (Note 1)	5	
I_O	Pulsed RMS Phase Current (Note 2)	15	
F_{PWM}	PWM Carrier Frequency	20	kHz
P_D	Power dissipation per IGBT @ T_C =25°C	27	W
V_{ISO}	Isolation Voltage (1min)	2000	V_{RMS}
T_J (IGBT & Diodes)	Operating Junction temperature Range	-40 to +150	°C
T_J (Driver IC)	Operating Junction temperature Range	-40 to +150	
T	Mounting torque Range (M3 screw)	0.5 to 1.0	Nm

Note 1: Sinusoidal Modulation at V^+=400V, T_J=150°C, F_{PWM}=20kHz, Modulation Depth=0.8, PF=0.6, See Figure 3.
Note 2: t_P<100ms; T_C=25°C; F_{PWM}=20kHz. Limited by $I_{BUS-ITRIP}$, see Table "Inverter Section Electrical Characteristics"

Internal Electrical Schematic - IRAMS10UP60B

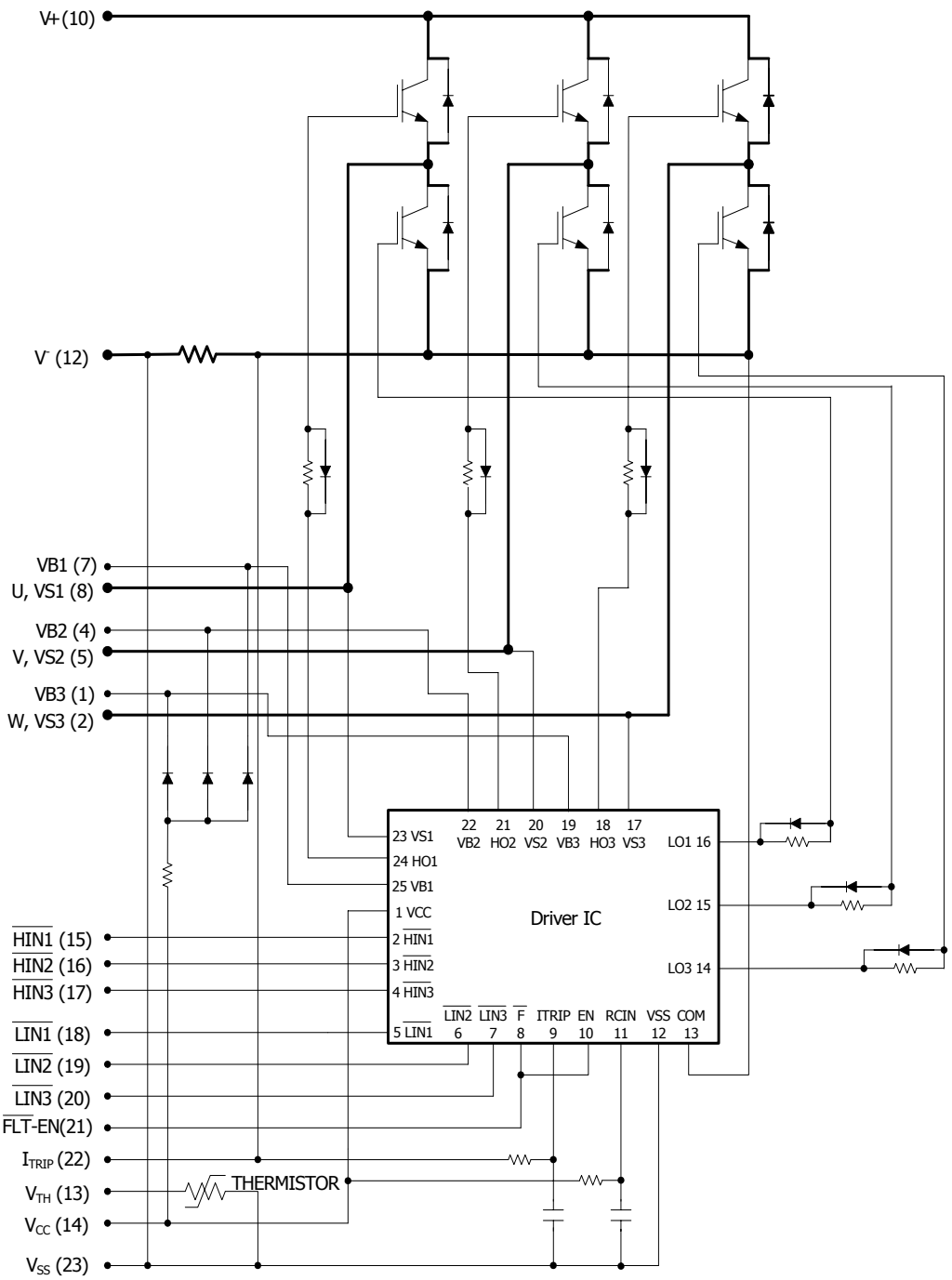

Absolute Maximum Ratings (Continued)

Symbol	Parameter	Min	Max	Units	Conditions
I_{BDF}	Bootstrap Diode Peak Forward Current	---	4.5	A	t_P= 10ms, T_J = 150°C, T_C=100°C
$P_{BR\ Peak}$	Bootstrap Resistor Peak Power (Single Pulse)	---	80	W	t_P=100µs, T_C =100°C ESR / ERJ series
$V_{S1,2,3}$	High side floating supply offset voltage	$V_{B1,2,3}$ - 25	$V_{B1,2,3}$ +0.3	V	
$V_{B1,2,3}$	High side floating supply voltage	-0.3	600	V	
V_{CC}	Low Side and logic fixed supply voltage	-0.3	20	V	
V_{IN}, V_{EN}, V_{ITRIP}	Input voltage LIN, HIN, EN, I_{Trip}	-0.3	Lower of (V_{SS}+15V) or V_{CC}+0.3V	V	

Inverter Section Electrical Characteristics @T_J= 25°C

Symbol	Parameter	Min	Typ	Max	Units	Conditions
$V_{(BR)CES}$	Collector-to-Emitter Breakdown Voltage	600	---	---	V	V_{IN}=5V, I_C=250µA
$\Delta V_{(BR)CES}$ / ΔT	Temperature Coefficient of Breakdown Voltage	---	0.57	---	V/°C	V_{IN}=5V, I_C=1.0mA (25°C - 150°C)
$V_{CE(ON)}$	Collector-to-Emitter Saturation Voltage	---	1.70	2.00	V	I_C=5A, V_{CC}=15V
		---	2.00	2.40		I_C=5A, V_{CC}=15V, T_J=150°C
I_{CES}	Zero Gate Voltage Collector Current	---	5	80	µA	V_{IN}=5V, V^+=600V
		---	10	---		V_{IN}=5V, V^+=600V, T_J=150°C
V_{FM}	Diode Forward Voltage Drop	---	1.80	2.35	V	I_C=5A
		---	1.30	1.70		I_C=5A, T_J=150°C
V_{BDFM}	Bootstrap Diode Forward Voltage Drop	--	--	1.25	V	I_F=1A
		---	---	1.10		I_F=1A, T_J=150°C
R_{BR}	Bootstrap Resistor Value	---	2	---	Ω	T_J=25°C
$\Delta R_{BR}/R_{BR}$	Bootstrap Resistor Tolerance	---	---	±5	%	T_J=25°C
I_{BUS_TRIP}	Current Protection Threshold (positive going)	13.1	---	16.4	A	T_J=-40°C to 125°C See fig. 2

Inverter Section Switching Characteristics @ T_J= 25°C

Symbol	Parameter	Min	Typ	Max	Units	Conditions
E_{ON}	Turn-On Switching Loss	---	200	235	µJ	I_C=5A, V^+=400V V_{CC}=15V, L=2mH Energy losses include "tail" and diode reverse recovery See CT1
E_{OFF}	Turn-Off Switching Loss	---	75	100		
E_{TOT}	Total Switching Loss	---	275	335		
E_{REC}	Diode Reverse Recovery energy	---	15	25		
t_{RR}	Diode Reverse Recovery time	---	70	100	ns	
E_{ON}	Turn-On Switching Loss	---	300	360	µJ	I_C=5A, V^+=400V V_{CC}=15V, L=2mH, T_J=150°C Energy losses include "tail" and diode reverse recovery See CT1
E_{OFF}	Turn-off Switching Loss	---	135	165		
E_{TOT}	Total Switching Loss	---	435	525		
E_{REC}	Diode Reverse Recovery energy	---	30	40		
t_{RR}	Diode Reverse Recovery time	---	100	145	ns	
Q_G	Turn-On IGBT Gate Charge	---	29	44	nC	I_C=15A, V^+=400V, V_{GE}=15V
RBSOA	Reverse Bias Safe Operating Area	FULL SQUARE				T_J=150°C, I_C=5A, V_P=600V V^+= 450V V_{CC}=+15V to 0V See CT3
SCSOA	Short Circuit Safe Operating Area	10	---	---	µs	T_J=150°C, V_P=600V, V^+= 360V, V_{CC}=+15V to 0V See CT2
I_{CSC}	Short Circuit Collector Current	---	47	---	A	T_J=150°C, V_P=600V, t_{SC}<10µs V^+= 360V, V_{GE}=15V V_{CC}=+15V to 0V See CT2

Recommended Operating Conditions Driver Function

The Input/Output logic timing diagram is shown in Figure 1. For proper operation the device should be used within the recommende conditions. All voltages are absolute referenced to COM/I_{TRIP}. The V_S offset is tested with all supplies biased at 15V differential (Note 3)

Symbol	Definition	Min	Max	Units
$V_{B1,2,3}$	High side floating supply voltage	V_S+12	V_S+20	V
$V_{S1,2,3}$	High side floating supply offset voltage	Note 4	450	
V_{CC}	Low side and logic fixed supply voltage	12	20	V
V_{ITRIP}	I_{TRIP} input voltage	V_{SS}	V_{SS}+5	
V_{IN}	Logic input voltage LIN, HIN	V_{SS}	V_{SS}+5	V
V_{EN}	Logic input voltage EN	V_{SS}	V_{SS}+5	V

Note 3: For more details, see IR21363 data sheet

Note 4: Logic operational for V_s from COM-5V to COM+600V. Logic state held for V_s from COM-5V to COM-V_{BS}. (please refer to DT97-3 for more details)

Static Electrical Characteristics Driver Function

V_{BIAS} (V_{CC}, $V_{BS1,2,3}$)=15V, unless otherwise specified. The V_{IN} and I_{IN} parameters are referenced to COM/I_{TRIP} and are applicable to all six channels. (Note 3)

Symbol	Definition	Min	Typ	Max	Units
V_{INH} , V_{ENH}	Logic "0" input voltage	3.0	---	---	V
V_{INL} , V_{ENL}	Logic "1" input voltage	---	---	0.8	V
V_{CCUV+}, V_{BSUV+}	V_{CC} and V_{BS} supply undervoltage Positive going threshold	10.6	11.1	11.6	V
V_{CCUV-}, V_{BSUV-}	V_{CC} and V_{BS} supply undervoltage Negative going threshold	10.4	10.9	11.4	V
V_{CCUVH}, V_{BSUVH}	V_{CC} and V_{BS} supply undervoltage lock-out hysteresis	---	0.2	---	V
$V_{IN,Clamp}$	Input Clamp Voltage (HIN, LIN, I_{TRIP}) I_{IN}=10µA	4.9	5.2	5.5	V
I_{QBS}	Quiescent V_{BS} supply current V_{IN}=0V	---	---	165	µA
I_{QCC}	Quiescent V_{CC} supply current V_{IN}=0V	---	---	3.35	mA
I_{LK}	Offset Supply Leakage Current	---	---	60	µA
I_{IN+}, I_{EN+}	Input bias current V_{IN}=5V	---	200	300	µA
I_{IN-}, I_{EN-}	Input bias current V_{IN}=0V	---	100	220	µA
I_{TRIP+}	I_{TRIP} bias current V_{ITRIP}=5V	---	30	100	µA
I_{TRIP-}	I_{TRIP} bias current V_{ITRIP}=0V	---	0	1	µA
V(I_{TRIP})	I_{TRIP} threshold Voltage	440	490	540	mV
V(I_{TRIP}, HYS)	I_{TRIP} Input Hysteresis	---	70	---	mV
$R_{ON,FLT}$	Fault Output ON Resistance	---	50	100	ohm

Dynamic Electrical Characteristics

Driver only timing unless otherwise specified.)

Symbol	Parameter	Min	Typ	Max	Units	Conditions
T_{ON}	Input to Output propagation turn-on delay time (see fig.11)	---	590	---	ns	V_{CC}=V_{BS}= 15V, I_C=10A, V^+=400V
T_{OFF}	Input to Output propagation turn-off delay time (see fig. 11)	---	700	---	ns	
T_{FLIN}	Input Filter time (HIN, LIN)	100	200	---	ns	V_{IN}=0 & V_{IN}=5V
$T_{BLT-Trip}$	I_{TRIP} Blancking Time	100	150		ns	V_{IN}=0 & V_{IN}=5V
D_T	Dead Time (V_{BS}=V_{DD}=15V)	220	290	360	ns	V_{BS}=V_{CC}=15V
M_T	Matching Propagation Delay Time (On & Off)	---	40	75	ns	V_{CC}= V_{BS}= 15V, external dead time> 400ns
T_{ITrip}	I_{Trip} to six switch to turn-off propagation delay (see fig. 2)	---	---	1.75	µs	V_{CC}=V_{BS}= 15V, I_C=10A, V^+=400V
$T_{FLT-CLR}$	Post I_{Trip} to six switch to turn-off clear time (see fig. 2)	---	7.7	---	ms	T_C = 25°C
		---	6.7	---		T_C = 100°C

Thermal and Mechanical Characteristics

Symbol	Parameter	Min	Typ	Max	Units	Conditions
$R_{th(J-C)}$	Thermal resistance, per IGBT	---	4.2	4.7	°C/W	Flat, greased surface. Heatsink compound thermal conductivity 1W/mK
$R_{th(J-C)}$	Thermal resistance, per Diode	---	5.5	6.5		
$R_{th(C-S)}$	Thermal resistance, C-S	---	0.1	---		
C_D	Creepage Distance	3.2	---	---	mm	See outline Drawings

Internal Current Sensing Resistor - Shunt Characteristics

Symbol	Parameter	Min	Typ	Max	Units	Conditions
R_{Shunt}	Resistance	33.0	33.3	33.7	mΩ	T_C = 25°C
T_{Coeff}	Temperature Coefficient	0	---	200	ppm/°C	
P_{Shunt}	Power Dissipation	---	---	2.2	W	-40°C< T_C <100°C
T_{Range}	Temperature Range	-40	---	125	°C	

Internal NTC - Thermistor Characteristics

Parameter	Definition	Min	Typ	Max	Units	Conditions
R_{25}	Resistance	97	100	103	kΩ	T_C = 25°C
R_{125}	Resistance	2.25	2.52	2.80	kΩ	T_C = 125°C
B	B-constant (25-50°C)	4165	4250	4335	k	$R_2 = R_1 e^{[B(1/T2 - 1/T1)]}$
Temperature Range		-40		125	°C	
Typ. Dissipation constant			1		mW/°C	T_C = 25°C

Input-Output Logic Level Table

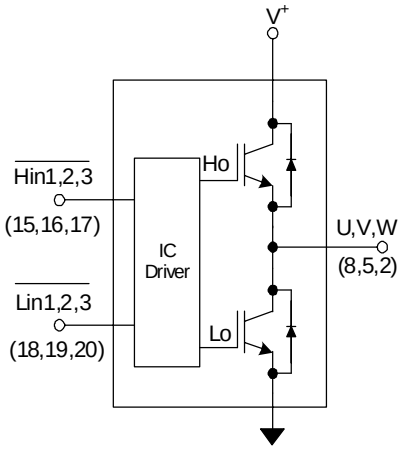

FLT- EN	I_{TRIP}	$\overline{HIN1,2,3}$	$\overline{LIN1,2,3}$	U,V,W
1	0	0	1	V^+
1	0	1	0	0
1	0	1	1	Off
1	1	X	X	Off
0	X	X	X	Off

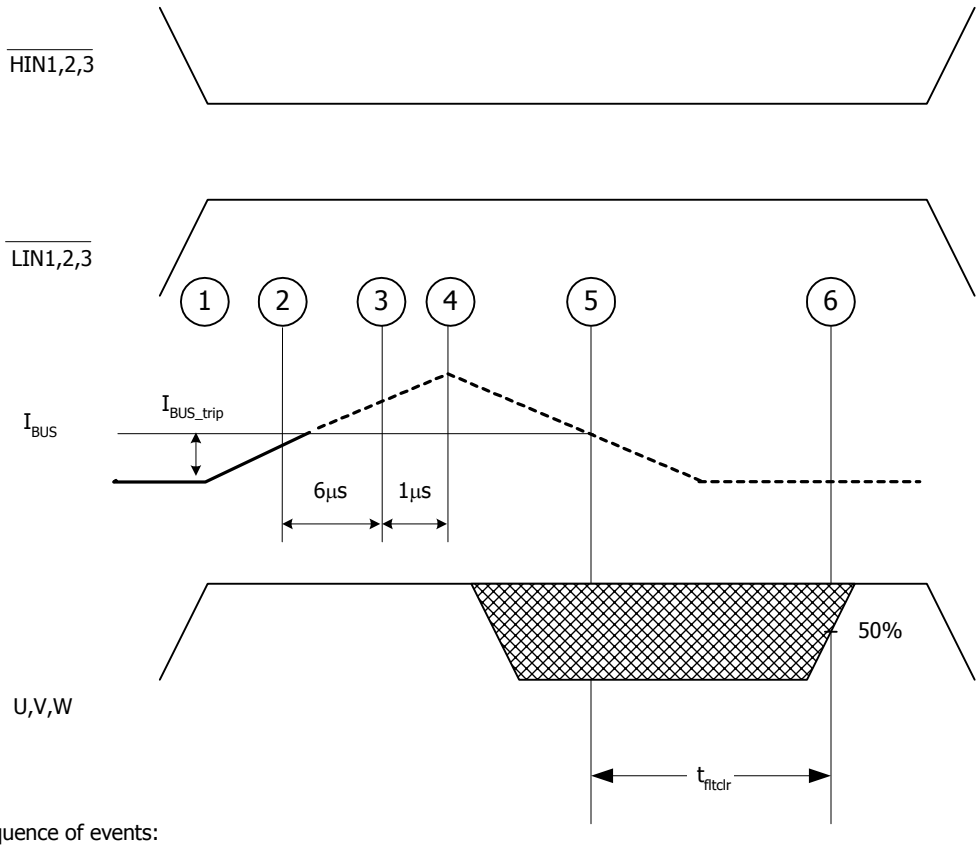

Sequence of events:
1-2) Current begins to rise
2) Current reaches I_{BUS_Trip} level
2-3) Current is higher than I_{BUS_Trip} for at least 6µs. This value is the worst-case condition with very low over-current. In case of high current (short circuit), the actual delay will be smaller.
3-4) Delay between driver identification of over-current condition and disabling of all outputs
4) Current starts decreasing, eventually reaching 0
5) Current goes below I_{BUS_trip}, the driver starts its auto-reset sequence
6) Driver is automatically reset and normal operation can resume (over-current condition must be removed by the time the drivers automatically resets itself)

Figure 2. I_{Trip} Timing Waveform

Note 5: The shaded area indicates that both high-side and low-side switches are off and therefore the half-bridge output voltage would be determined by the direction of current flow in the load.

Module Pin-Out Description

Pin	Name	Description
1	V_{B3}	High Side Floating Supply Voltage 3
2	W,V_{S3}	Output 3 - High Side Floating Supply Offset Voltage
3	NA	none
4	V_{B2}	High Side Floating Supply voltage 2
5	V,V_{S2}	Output 2 - High Side Floating Supply Offset Voltage
6	NA	none
7	V_{B1}	High Side Floating Supply voltage 1
8	U, V_{S1}	Output 1 - High Side Floating Supply Offset Voltage
9	NA	none
10	V^+	Positive Bus Input Voltage
11	NA	none
12	V^-	Negative Bus Input Voltage
13	V_{TH}	Temperature Feedback
14	V_{CC}	+15V Main Supply
15	$\overline{H_{IN1}}$	Logic Input High Side Gate Driver - Phase 1
16	$\overline{H_{IN2}}$	Logic Input High Side Gate Driver - Phase 2
17	$\overline{H_{IN3}}$	Logic Input High Side Gate Driver - Phase 3
18	$\overline{L_{IN1}}$	Logic Input Low Side Gate Driver - Phase 1
19	$\overline{L_{IN2}}$	Logic Input Low Side Gate Driver - Phase 2
20	$\overline{L_{IN3}}$	Logic Input Low Side Gate Driver - Phase 3
21	$\overline{FLT}$/Enable	Fault Output and Enable Pin
22	I_{TRIP}	Current Sense and Itrip Pin
23	V_{SS}	Negative Main Supply

Typical Application Connection IRAMS10UP60B

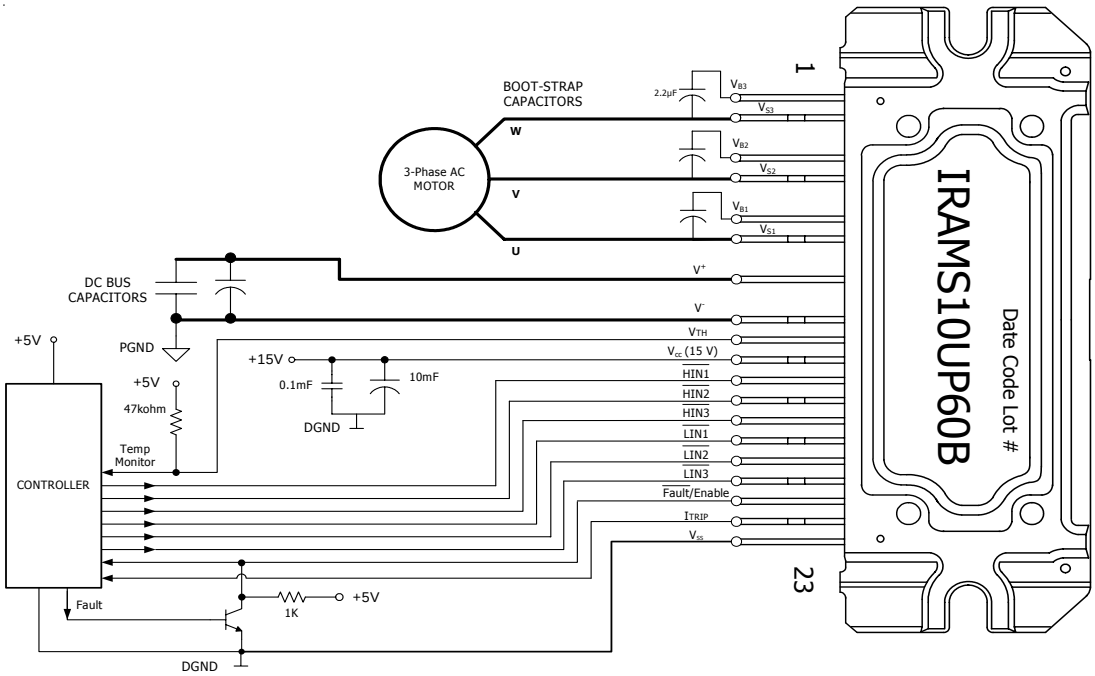

1. Electrolytic bus capacitors should be mounted as close to the module bus terminals as possible to reduce ringing and EMI problems. Additional high frequency ceramic capacitor mounted close to the module pins will further improve performance.

2. In order to provide good decoupling between V_{CC}-V_{SS} and $V_{B1,2,3}$-$V_{S1,2,3}$ terminals, the capacitors shown connected between these terminals should be located very close to the module pins. Additional high frequency capacitors, typically 0.1µF, are strongly recommended.

3. Value of the boot-strap capacitors depends upon the switching frequency. Their selection should be made based on IR design tip DN 98-2a, application note AN-1044 or Figure 9. Bootstrap capacitor value must be selected to limit the power dissipation of the internal resistor in series with the V_{CC}. (see maximum ratings Table on page 3).

4. Current sense signal can be obtained from pin 22 and pin 23. Care should be taken to avoid having inverter current flowing through pin 22 to mantain required current measurement accuracy.

5. After approx. 8ms the FAULT is reset. (see Dynamic Characteristics Table on page 5).

6. PWM generator must be disabled within Fault duration to garantee shutdown of the system, overcurrent condition must be cleared before resuming operation.

7. $\overline{\text{Fault}}$/Enable pin must be pulled-up to +5V.

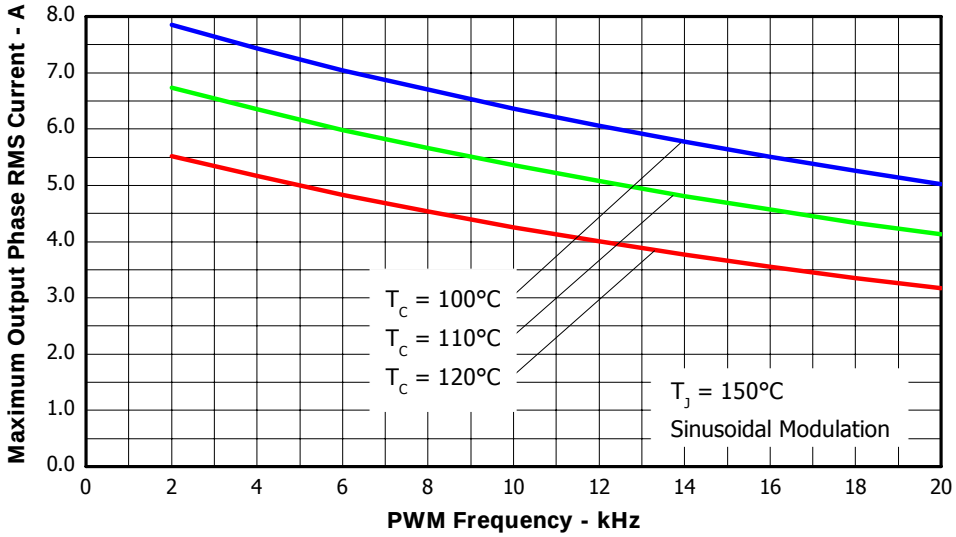

Figure 3. Maximum Sinusoidal Phase Current vs. PWM Switching Frequency
V^+=400V , T_J=150°C, Modulation Depth=0.8, PF=0.6

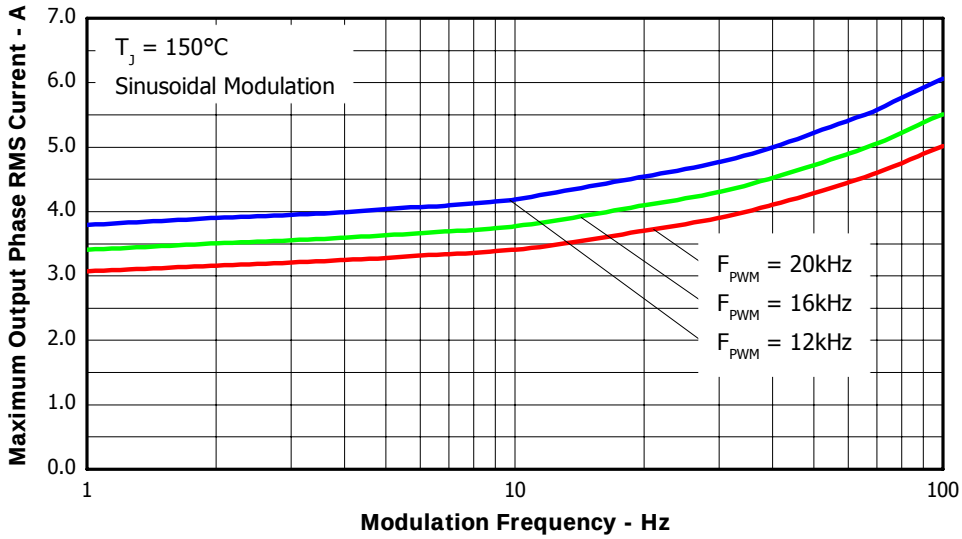

Figure 4. Maximum Sinusoidal Phase Current vs. Modulation Frequency
V^+=400V, T_J=150°C, T_C=100°C, Modulation Depth=0.8, PF=0.6

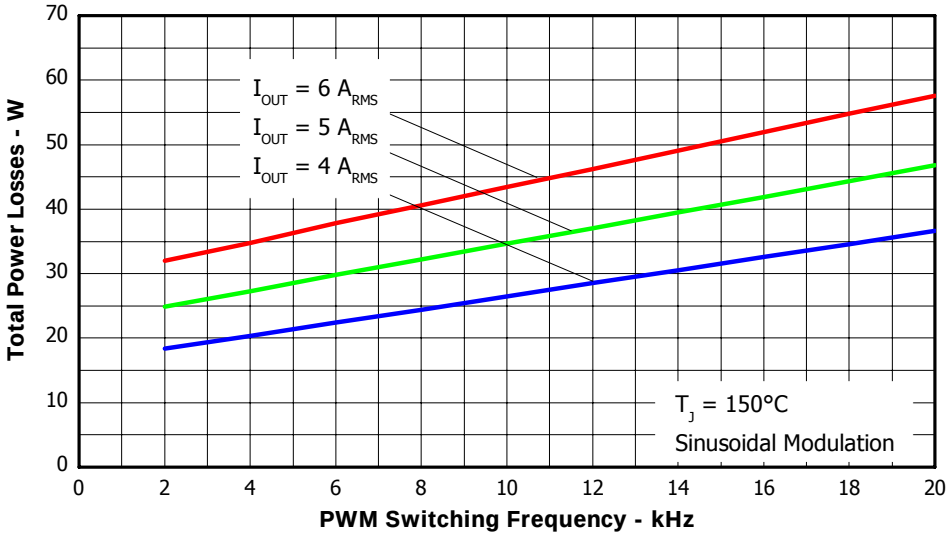

Figure 5. Total Power Losses vs. PWM Switching Frequency, Sinusoidal modulation
V^{+}=400V , T_J=150°C, Modulation Depth=0.8, PF=0.6

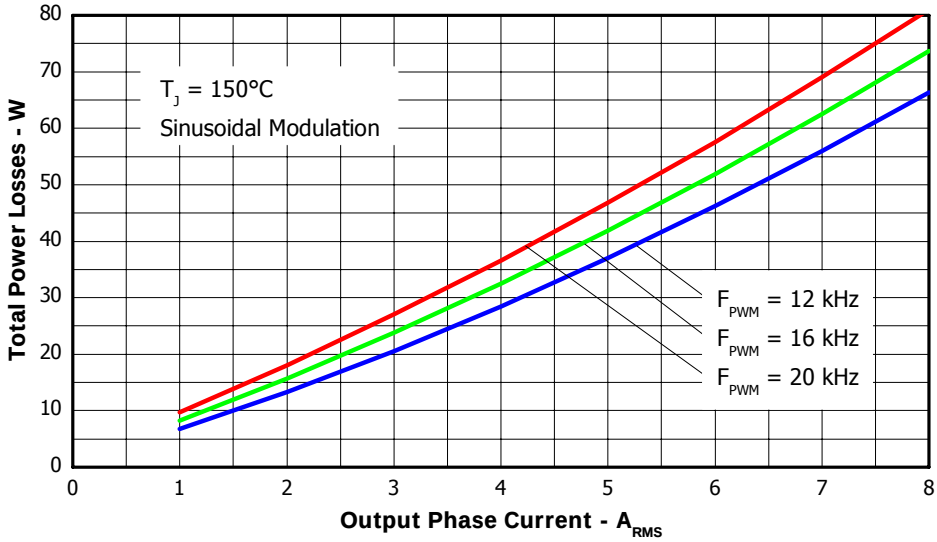

Figure 6. Total Power Losses vs. Output Phase Current, Sinusoidal modulation
V_{BUS}=400V , T_J=150°C, Modulation Depth=0.8, PF=0.6

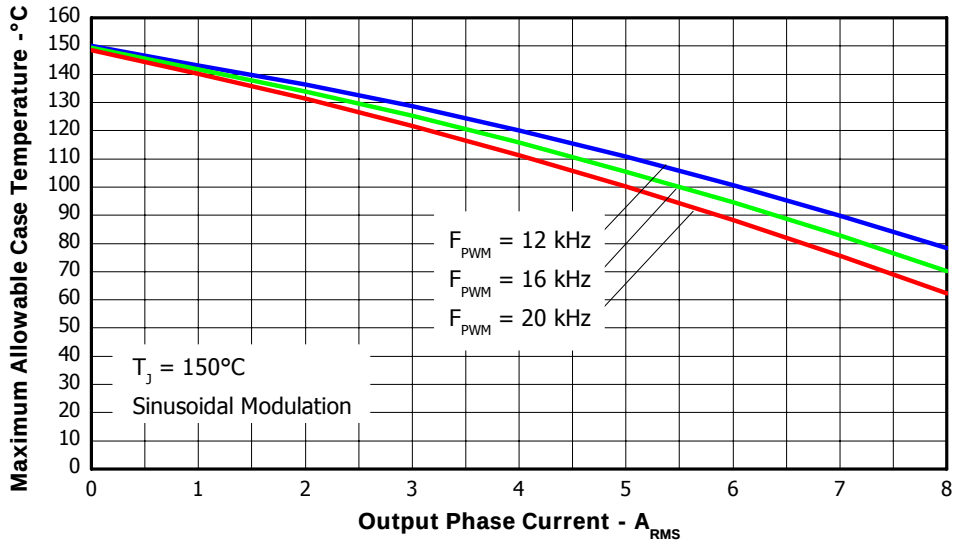

Figure 7. Maximum Allowable Case temperature vs. Output RMS Current per Phase

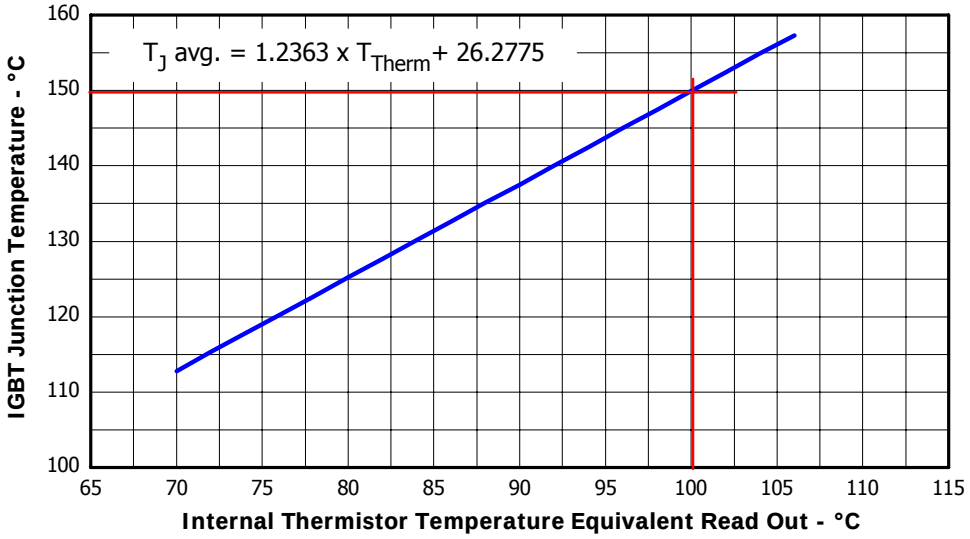

Figure 8. Estimated Maximum IGBT Junction Temperature vs. Thermistor Temperature

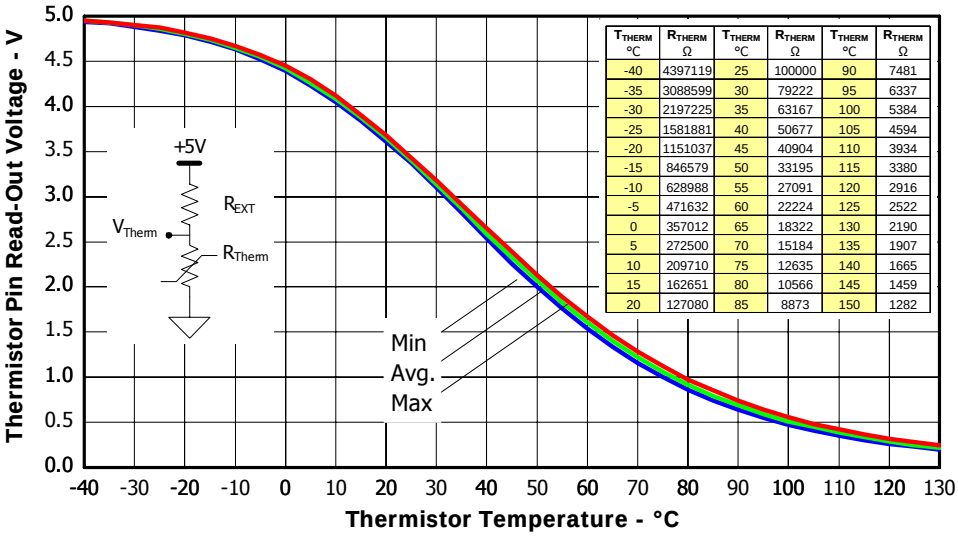

T_{THERM} °C	R_{THERM} Ω	T_{THERM} °C	R_{THERM} Ω	T_{THERM} °C	R_{THERM} Ω
-40	4397119	25	100000	90	7481
-35	3088599	30	79222	95	6337
-30	2197225	35	63167	100	5384
-25	1581881	40	50677	105	4594
-20	1151037	45	40904	110	3934
-15	846579	50	33195	115	3380
-10	628988	55	27091	120	2916
-5	471632	60	22224	125	2522
0	357012	65	18322	130	2190
5	272500	70	15184	135	1907
10	209710	75	12635	140	1665
15	162651	80	10566	145	1459
20	127080	85	8873	150	1282

Figure 9. Thermistor Readout vs. Temperature (47kohm pull-up resistor, 5V) and Nominal Thermistor Resistance values vs. Temperature Table.

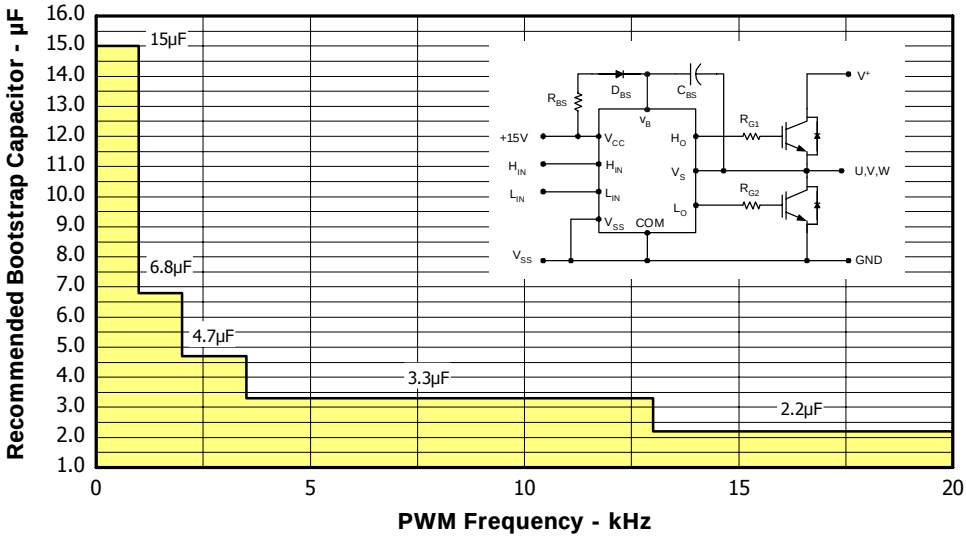

Figure 10. Recommended Bootstrap Capacitor Value vs. Switching Frequency

Figure 11. Switching Parameter Definitions

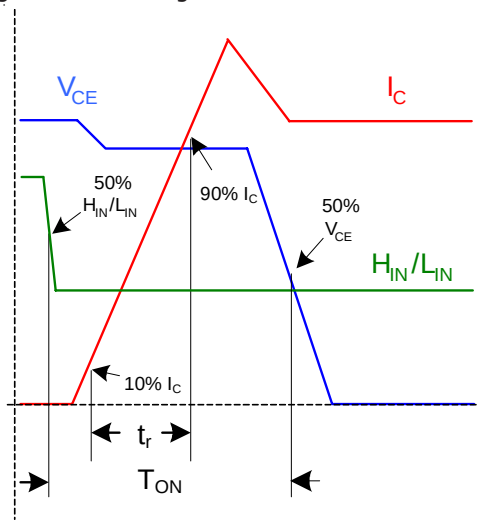

Figure 11a. Input to Output Propagation turn-on Delay Time

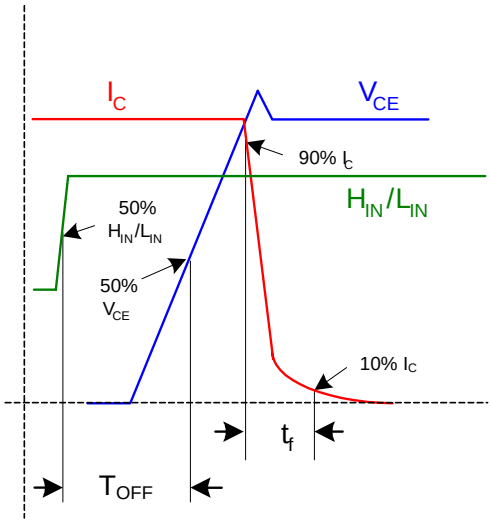

Figure 11b. Input to Output Propagation turn-off Delay Time

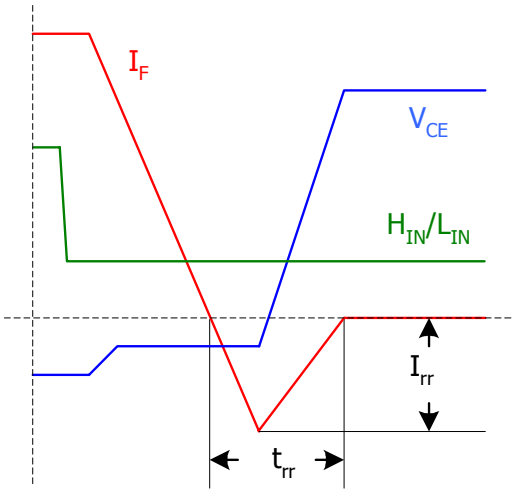

Figure 11c. Diode Reverse Recovery

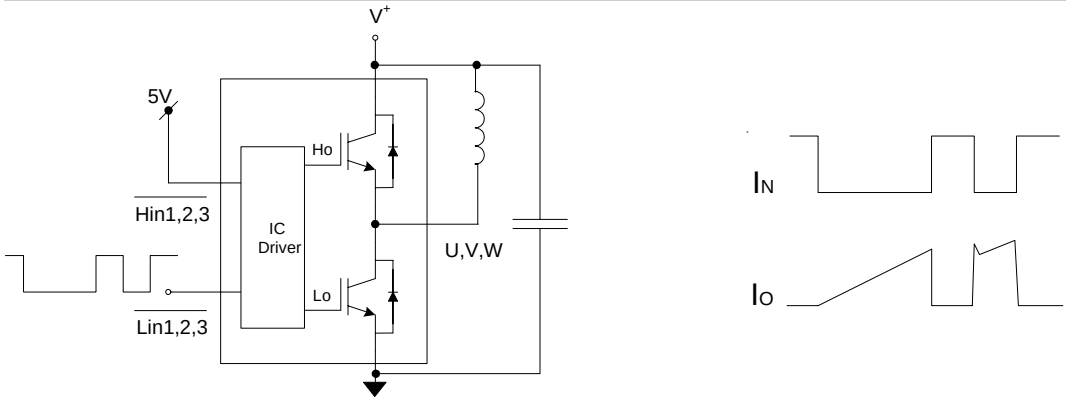

Figure CT1. Switching Loss Circuit

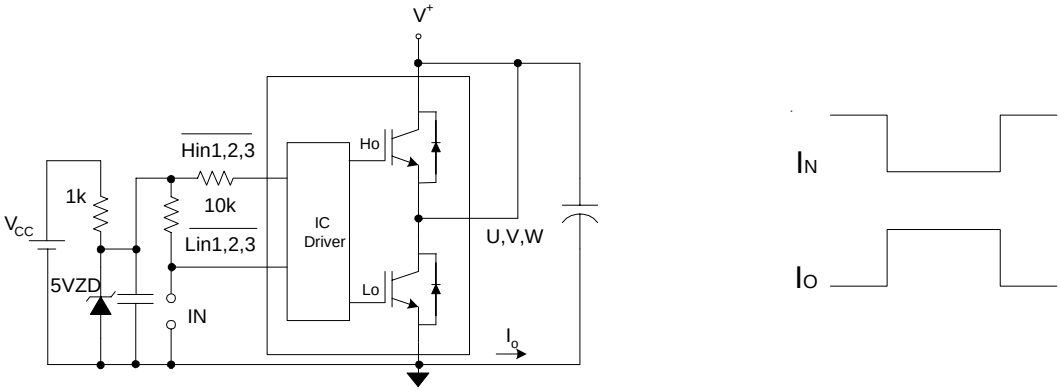

Figure CT2. S.C.SOA Circuit

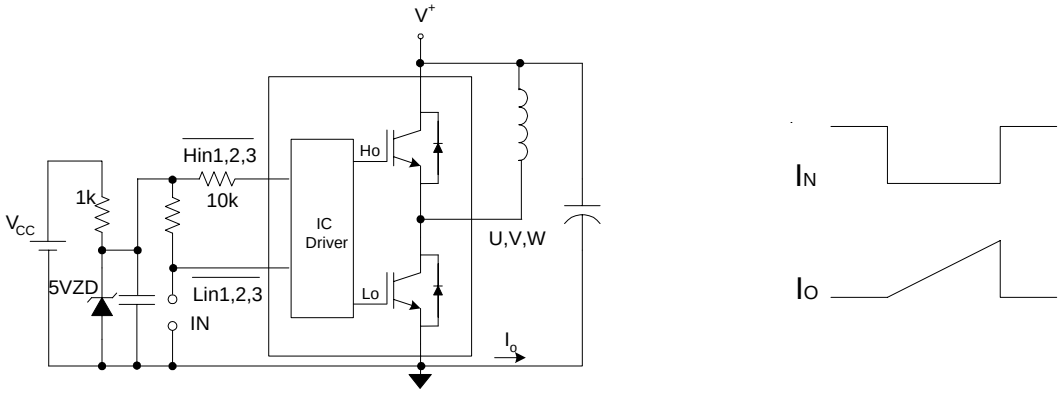

Figure CT3. R.B.SOA Circuit

Package Outline IRAMS10UP60B

missing pin : 3,6,9,11

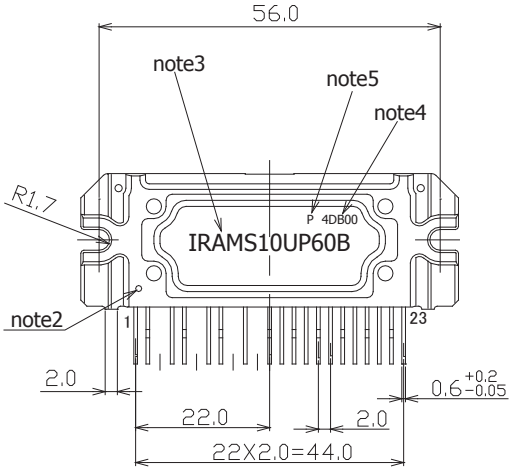

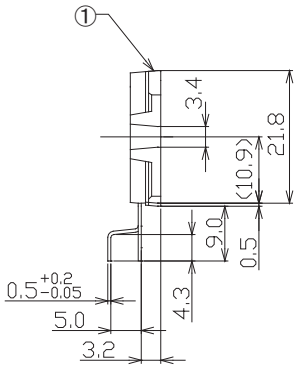

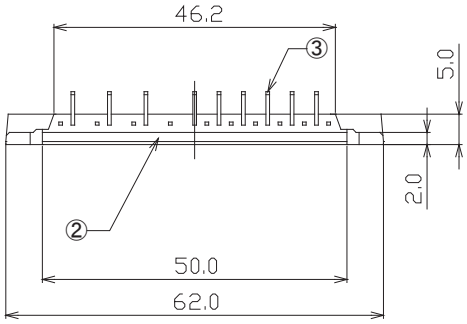

note1: Unit Tolerance is ±0.5mm,
Unless Otherwise Specified.

note2: Mirror Surface Mark indicates Pin1 Identification.

note3: Part Number Marking.
Characters Font in this drawing differs from
Font shown on Module.

note4: Lot Code Marking.
Characters Font in this drawing differs from
Font shown on Module.

note5: "P" Character denotes Lead Free.
Characters Font in this drawing differs from
Font shown on Module.

Dimensions in mm
For mounting instruction see AN-1049

Package Outline IRAMS10UP60B-2

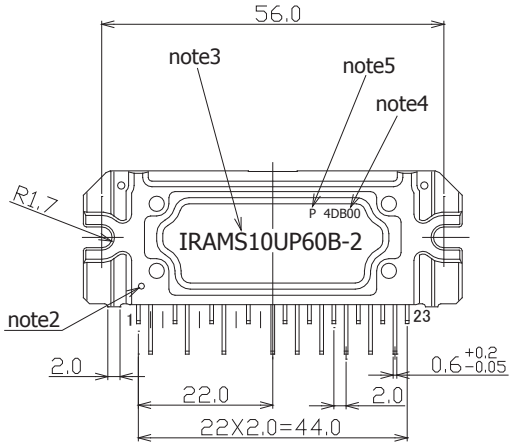

missing pin : 3,6,9,11

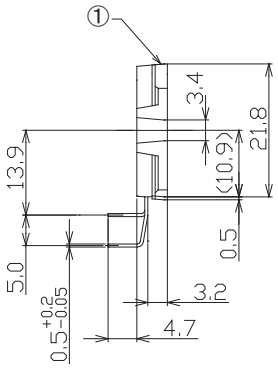

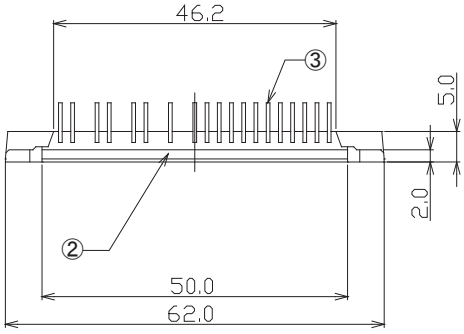

note1: Unit Tolerance is ±0.5mm,
Unless Otherwise Specified.

note2: Mirror Surface Mark indicates Pin1 Identification.

note3: Part Number Marking.
Characters Font in this drawing differs from
Font shown on Module.

note4: Lot Code Marking.
Characters Font in this drawing differs from
Font shown on Module.

note5: "P" Character denotes Lead Free.
Characters Font in this drawing differs from
Font shown on Module.

Dimensions in mm
For mounting instruction see AN-1049

International
IOR Rectifier
Data and Specifications are subject to change without notice
IR WORLD HEADQUARTERS: 233 Kansas St., El Segundo, California 90245, USA Tel: (310) 252-7105
TAC Fax: (310) 252-7903
Visit us at www.irf.com for sales contact information
2012-12-19

Мы молодая и активно развивающаяся компания в области поставок электронных компонентов. Мы поставляем электронные компоненты отечественного и импортного производства напрямую от производителей и с крупнейших складов мира.

Благодаря сотрудничеству с мировыми поставщиками мы осуществляем комплексные и плановые поставки широчайшего спектра электронных компонентов.

Собственная эффективная логистика и склад в обеспечивает надежную поставку продукции в точно указанные сроки по всей России.

Мы осуществляем техническую поддержку нашим клиентам и предпродажную проверку качества продукции. На все поставляемые продукты мы предоставляем гарантию .

Осуществляем поставки продукции под контролем ВП МО РФ на предприятия военно-промышленного комплекса России , а также работаем в рамках 275 ФЗ с открытием отдельных счетов в уполномоченном банке. Система менеджмента качества компании соответствует требованиям ГОСТ ISO 9001.

Минимальные сроки поставки, гибкие цены, неограниченный ассортимент и индивидуальный подход к клиентам являются основой для выстраивания долгосрочного и эффективного сотрудничества с предприятиями радиоэлектронной промышленности, предприятиями ВПК и научно-исследовательскими институтами России.

С нами вы становитесь еще успешнее!

Наши контакты:

Телефон: +7 812 627 14 35

Электронная почта: sales@st-electron.ru

Адрес: 198099, Санкт-Петербург, Промышленная ул, дом № 19, литера Н, помещение 100-Н Офис 331